7-16-98 NB

WEIGHT OF ONE 1" THK LAMINATION SHEET

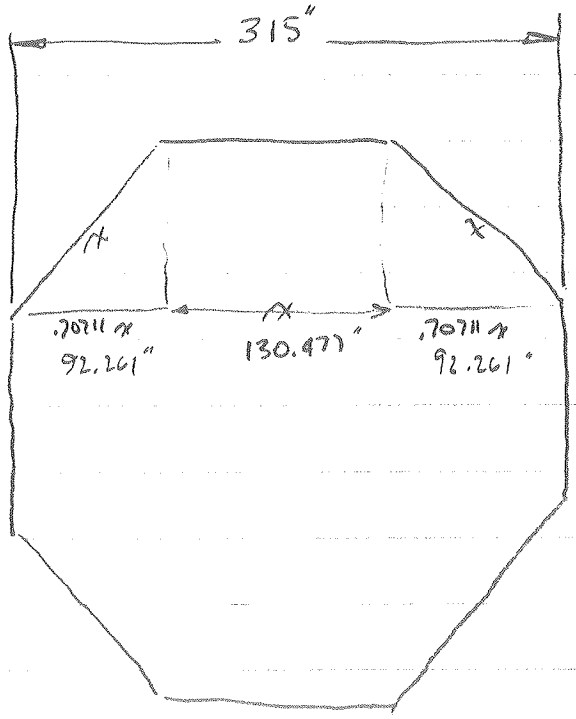

$$x + 2(.70711\,x) = 315''$$

$$x = 130.477''$$

$$\text{AREA} = 315^2 - \left(\frac{92.261}{2}\right)^2 \times 4 = 82200.8 \text{ IN}^2$$

1" THK ASSEMBLY VOLUMN = 82200.8 IN^3

$$\text{WEIGHT} = \frac{\text{VOL.}}{1728} \times 490 \frac{\text{lb}}{\text{FT}^3} = 23{,}309 \text{ lb.}$$

THEREFORE USE $\boxed{25{,}000 \text{ lb}}$ = WEIGHT OF ONE STEEL SHEET LAMINATION

ALSO WEIGHT of 5 METER SQUARE x 1" THK PLATE (28,136 lbs.)

7-22-98

LOOK AT DEFLECTION OF PLATE OVER BOTH I-BEAMS

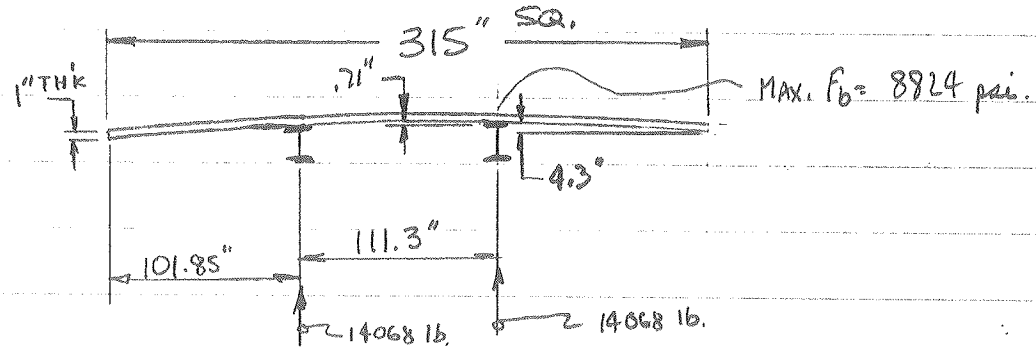

$$I = \frac{bh^3}{12} = \frac{315 \times 1^3}{12} = 26.25 \text{ IN}^4$$

$$W = \frac{28136 \text{ lb}}{315''} = 89.32 \text{ lb/IN.}$$

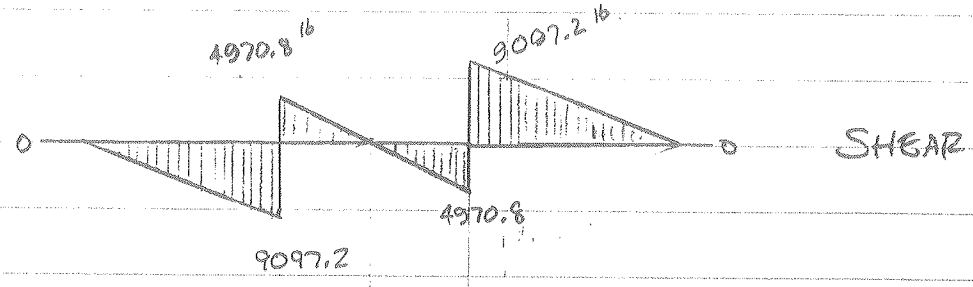

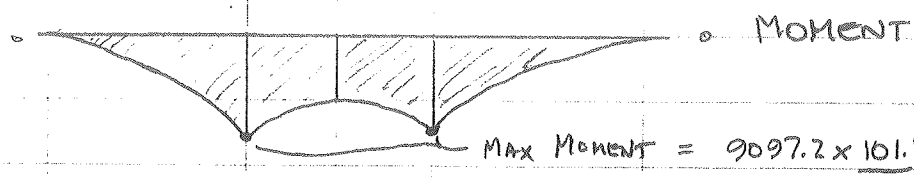

MAX MOMENT = $9097.2 \times \frac{101.85}{2} = 463275.$

BENDING STRESS : $\frac{MC}{I} = \frac{463275 \times .5}{26.25} = 8824$ psi.

SINCE $F_b = 8824$ psi < 30000 psi

YIELD STRESS LOW CARBON STEEL

PLATE WILL NOT PERMINATELY DEFORM.

DEFLECTION AT ENDS :

MACHINERY HDBK 10th EDITION pp 376

$$\Delta = \frac{Wc}{24EIL}\left[3c^2(c+2l) - l^3\right]$$

$W = 28136$

$\Delta = .0000005(10096971 - 1378750)$ $c = 101.85''$

$l = 111.3''$

$\boxed{\Delta = 4.34''}$

$E = 29 \times 10^6$ psi

$I = 26.25$ IN^4

$L = 315$

DEFLECTION AT CENTER

$$\Delta = \frac{Wl^2}{384EIL}(5l^2 - 24c^2)$$

$\Delta = .0000038(187023.7)$

$\boxed{\Delta = .708''}$

7-25-98

SUMMARY OF MAXIMUM BEAM STRESSES

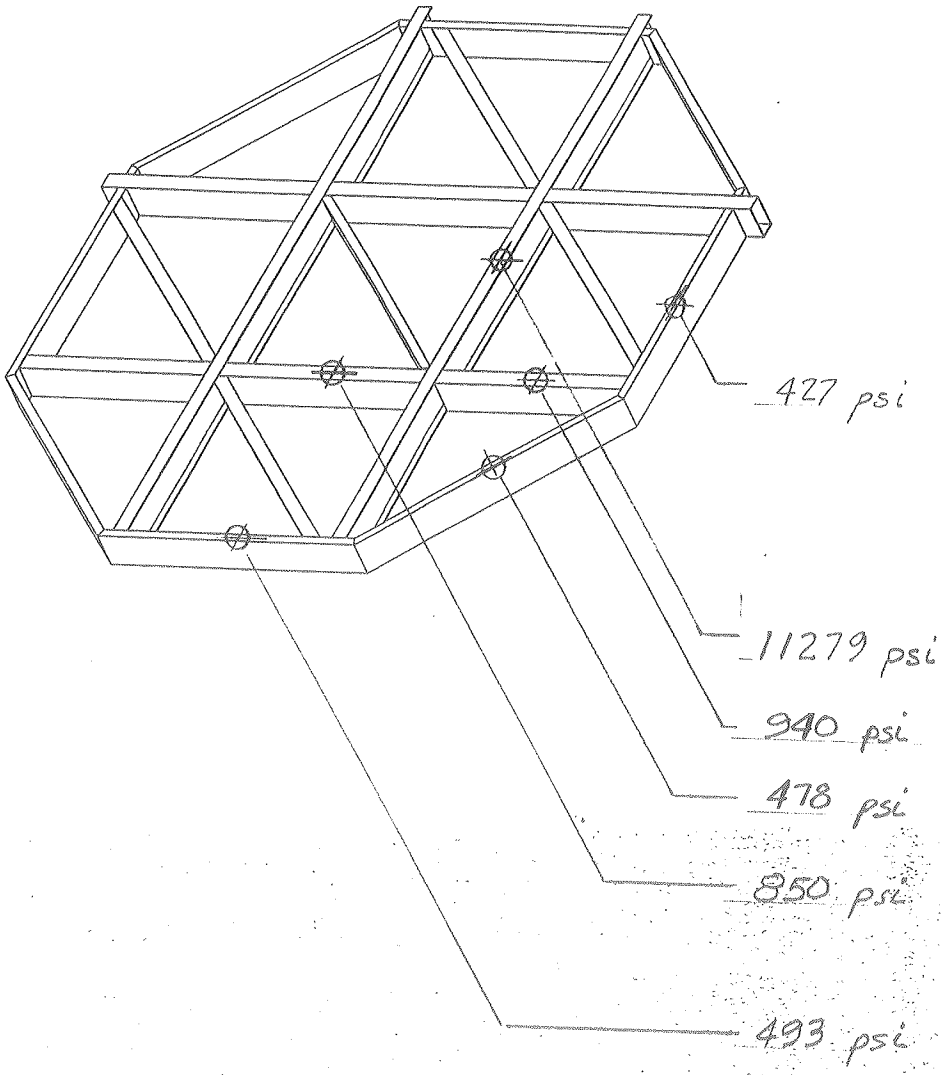

$$\text{MAX. ALLOWABLE STRESS} = \frac{\text{YIELD STRESS}}{\text{FACTOR of SAFETY}} = \frac{36000}{3} = 12{,}000 \text{ psi}$$

$$\text{OR } \frac{12000000}{l\,d/A_f} \text{ WHICH EATHER IS LEAST.}$$

7-23-98

WEIGHT OF EACH BEAM (POUNDS)

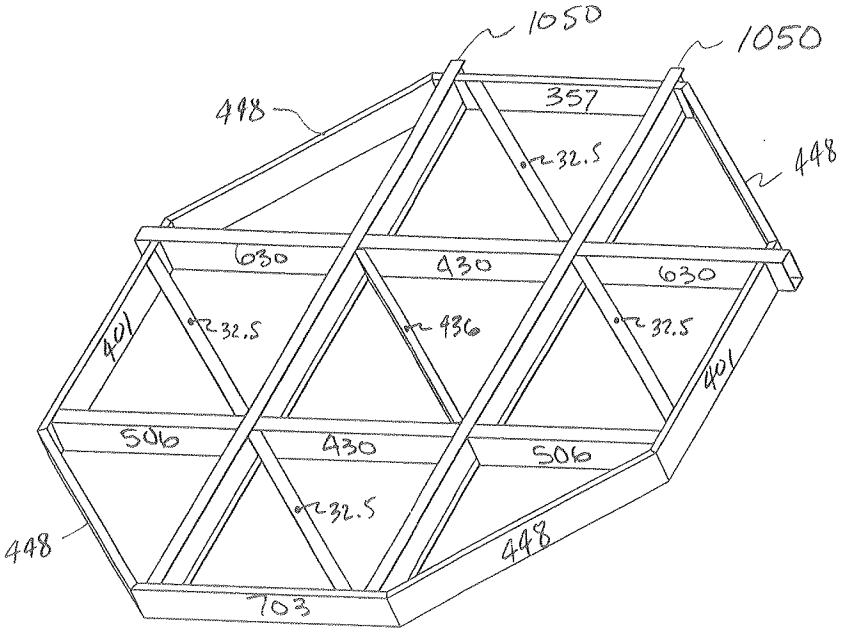

TOTAL WEIGHT THIS PAGE = 9452 lb.

WEIGHT of CONNECTIONS

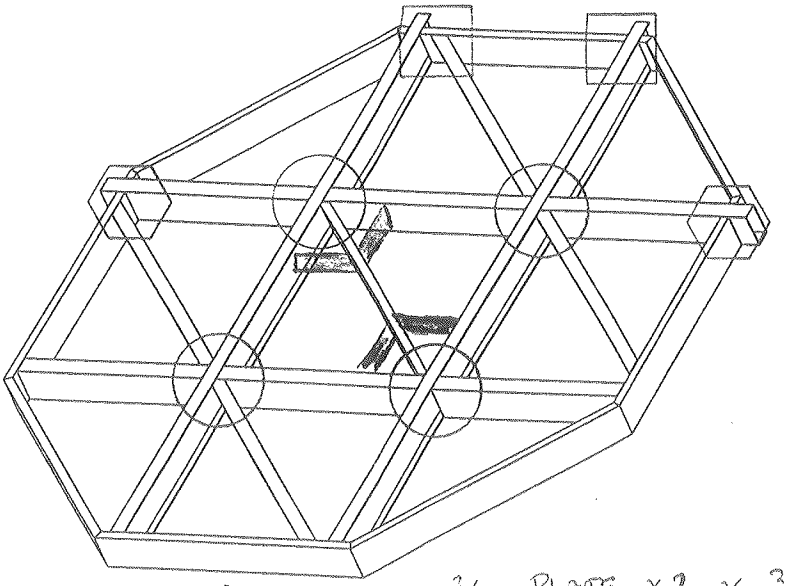

8 x 19.125 x 3/4 PLATE x 2 x 32.47 lb.
BOLTS 3/4 x 1 3/4 LG. x 4 x x .34 lb.
BOLTS 3/4 x 2 3/4 LG. x 16 x .47 lb.
BOLTS 3/4 x 6" LG. x 4 x .88 lb.
BOLT 3/4 x 9 1/2 LG. x 4 x 1.31 lb.
5 x 3.5 x .5 ∠ x 8 x 8.92 lb.

153.9 lb. x 2 = 308 lb.

BOLTS 3/4 x 11" LG. x 8 x 1.50 lb.
BOLTS 3/4 x 2 3/4 LG. x 8 x .47 lb.
8 x 6 x 3/4 ∠ x 4 x 28.17 lb.

128.4 lb x 4 = 514 lb

BOLTS 3/4 x 6 1/2 LG x 4 x .94 lb.
BOLTS 1" x 6 1/2 LG x 2 x 1.67 lb
BOLTS 3/4 x 2 3/4 LG. x 8 x .47 lb
8 x 6 x 3/4 ∠ x 2 x 28.17 lb
6 x 6 x 3/4 ∠ x 2 x 23.92 lb.

115. lb x 2 = 230. lb.

BOLTS 3/4 x 11" LG x 8 x 1.5 lb.
BOLTS 3/4 x 6 1/2 LG x 4 x .94 lb
BOLTS 1" x 6 1/2 LG x 2 x 1.67 lb
8 x 4 x 3/4 ∠ x 2 x 23.92 lb
8 x 6 x 3/4 ∠ x 2 x 28.17 lb.

123.3 x 2 = 247 lb.

TOTAL THIS PAGE 1299 lb.

WEIGHT of CONNECTIONS

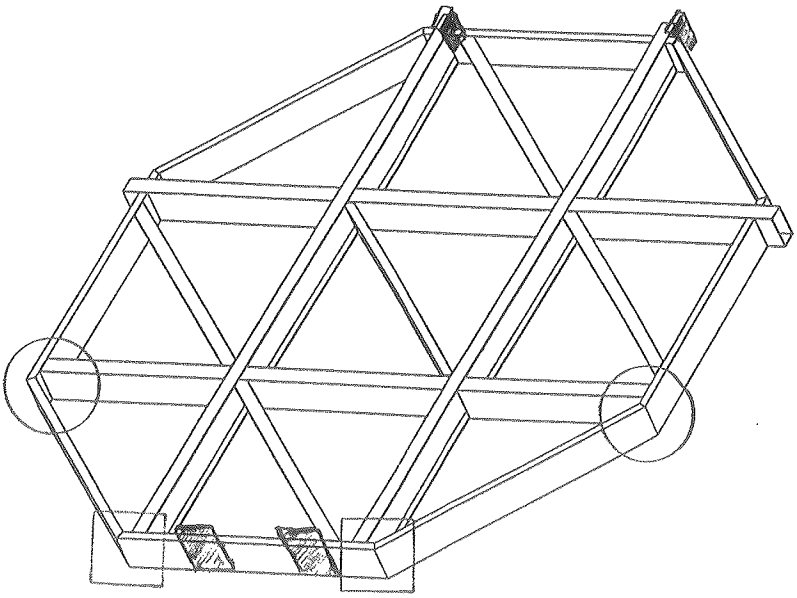

(12.6 x 11 x 1.5 − 6 x 2.6 x 1.5) x .283 = 52.21 lb
5 x 4.6 x 1.5 x .283 = 9.76 lb
} 61.97 x 2 = 124 lb

BOLTS 3/4 x 6 1/2 LG x 10 x .94 lb
BOLTS 3/4 x 11" LG. x 4 x 1.5 lb.
BOLTS 1" x 6 1/2" LG. x 2 x 1.67 lb.
8x6 x 3/4 ∠ x 1 x 28.17 lb.
8x4 x 3/4 ∠ x 1 x 23.92 lb.
10.86 x 10 x 3/4 BRKT x 1 x 23.05 lb
17.7 x 10 x 3/4 BRKT x 1 x 37.57 lb.
10 x 6 x 3/4 PLATE x 1 x 12.79 lb.
} 144.2 x 2 = 288 lb.

BOLT 3/4 x 2 3/4 x 7 x .47 lb.
BOLT 3/4 x 6 1/2 x 23 x .94 lb
6x6 x 3/4 ∠ x 1 x 34.68 lb
8x6 x 3/4 ∠ x 1 x 40.84 lb.
24.76 x 14.5 x 3/4 BRKT x 1 x 76.2 lb.
14.5 x 6 x 3/4 BRKT x 1 x 18.47 lb.
} 195.1 x 2 = 390 lb.

BOLT 3/4 x 7" LG x 5 x 1 lb.
BOLT 1/2 x 7" LG x 5 x .45 lb.
20 x 17 x 1 1/4 BRKT x 1 x 120.28 lb.
20 x 16 x 3/4 BRKT x 1 x 24 lb.
} 151.5 x 2 = 303 lb.

TOTAL THIS PAGE 1105 lb.

8-28-98

TOTAL WEIGHT of STRONG BACK:

PAGE 1	9452
PAGE 2	1299
PAGE 3	1105
	11856 lb.

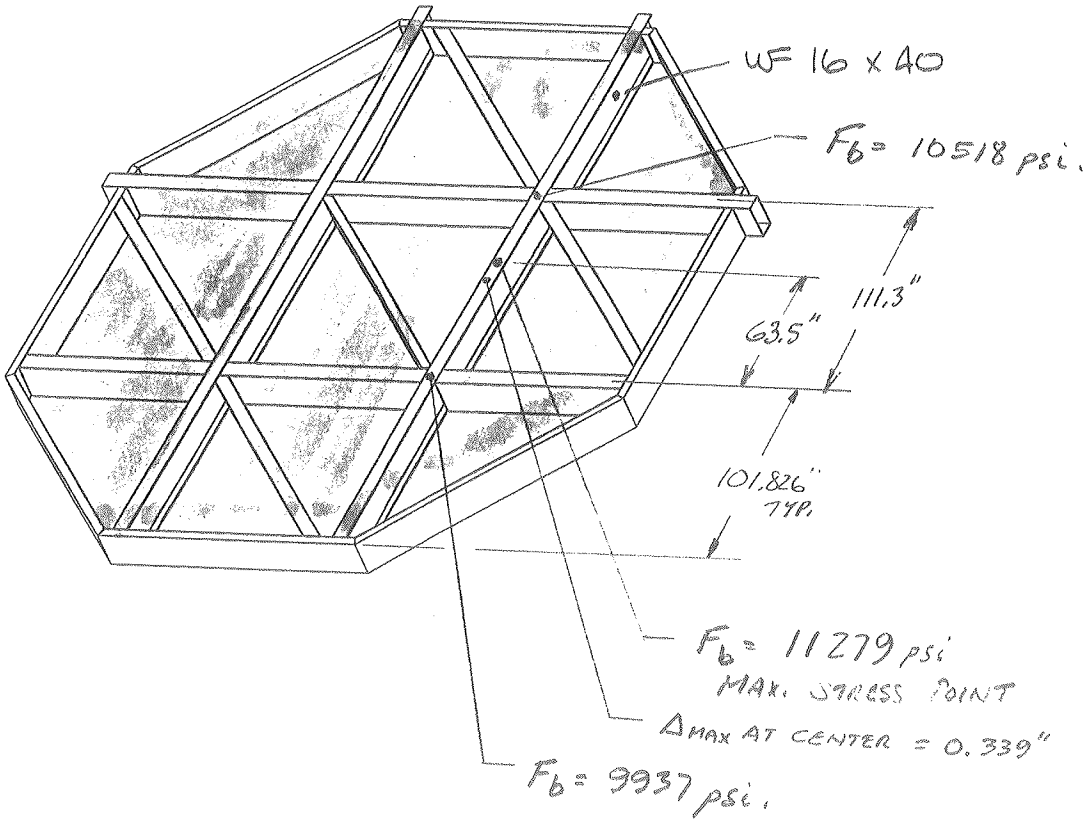

PLATE SIZE USE IN CALCULATIONS

REVISE LOADING CALCULATIONS TO INCLUDING WEIGHT OF BEAMS & PLATE

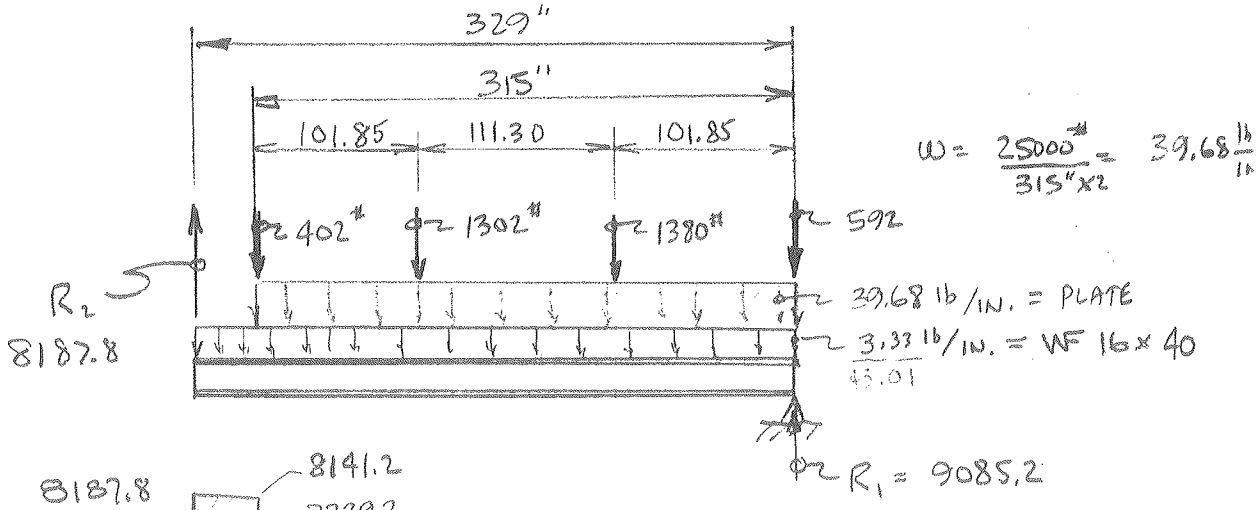

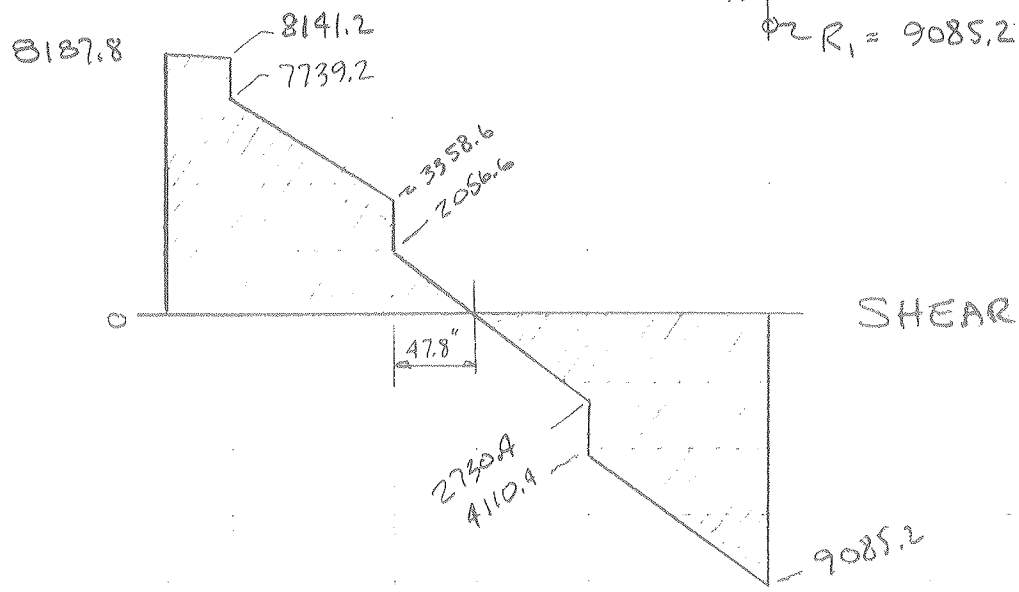

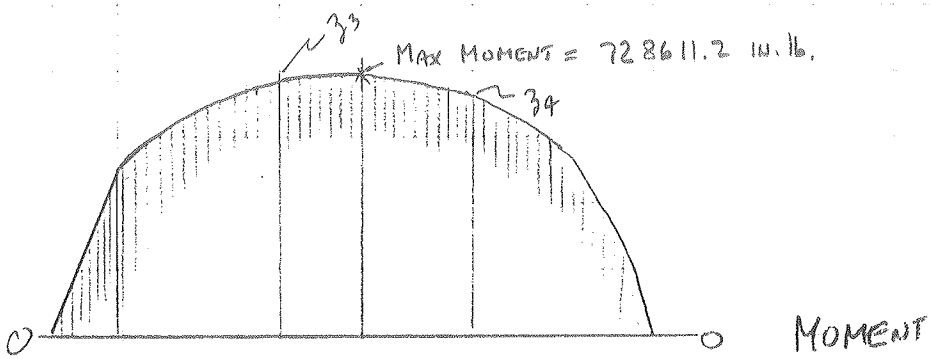

ALL WEIGHTS IN POUNDS.

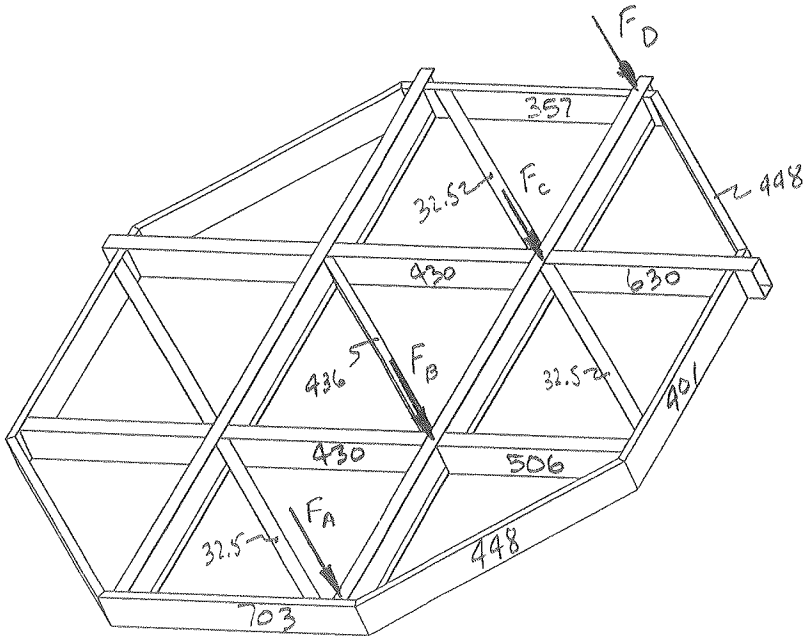

$$F_A = \frac{703}{2} + \frac{32.5}{2} + \frac{448}{2} = 592 \text{ lb.}$$

$$F_B = \frac{430}{2} + \frac{436}{2} + 506 + \frac{32.5}{2} + \frac{401}{2} + \frac{448}{2} = 1380 \text{ lb.}$$

$$F_C = \frac{430}{2} + \frac{32.5}{2} + \frac{32.5}{2} + 630 + \frac{448}{2} + \frac{401}{2} = 1302 \text{ lb.}$$

$$F_D = \frac{357}{2} + \frac{448}{2} = 402 \text{ lb.}$$

CALCULATING REACTION LOADS :

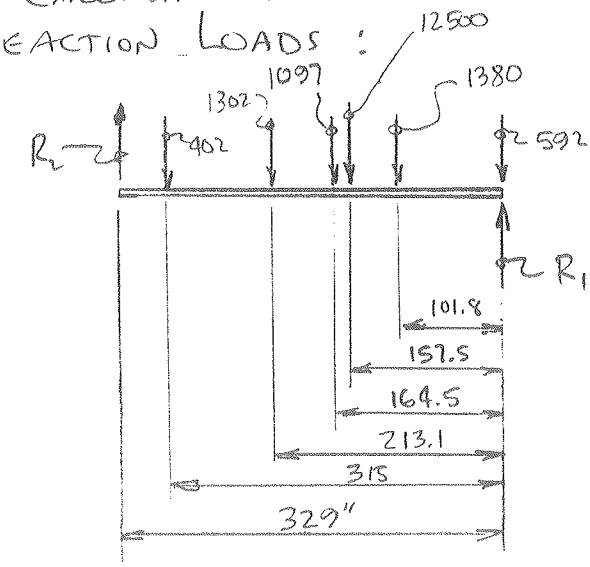

$= 1755 \times 164.5$
$= \frac{1097 \times 164.5}{658}$

$\Sigma M_1 = 0$

$\therefore \quad 329\,R_2 - 402(315) - 1302(213.1) - 1097(164.5) - 12500(157.5)$
$- 1380(101.8) = 0$

$329\,R_2 = 2693776.7$

$R_2 = 8187.8$ lb.

$\Sigma M_2 = 0$

$\therefore \quad R_1(329) - 402(14) - 1302(115.9) - 1097(164.5) - 12500(171.5)$
$- 1380(227.2) - 592(329) = 0$

2989040.3

$329\,R_1 = 2989040.3$

$R_1 = 9085.2$ lb.

$\Sigma F_y = 0 \quad \therefore \quad 8516.8 + 9414.2 = 402 + 1302 + 1097 + 12500 + 1380 + 592$

$17273 = 17273$

IT "CHECKS"

MAX. MOMENT = AREA of SHEAR DIAGRAM

$$M = \frac{8187.8 + 8141.2}{2} \times 14 + \frac{7739.2 + 3358.6}{2} \times 101.85 + \frac{2056.6}{2} \times 47.8$$

$$M_{MAX} = 114{,}303 + 565{,}155.5 + 49152.7$$

$$M_{MAX} = 728{,}611.2 \text{ in lb}$$

MAX. BENDING STRESS $F_b = \frac{M}{S} = \frac{728{,}611.2}{64.6 \text{ in}^3} = \boxed{11{,}279 \text{ psi}}$

SAFETY FACTOR $= \frac{36000}{11279} = 3.19$ TO 1

CHECK $F_{b_{MAX}} \leq \frac{12{,}000{,}000}{ld/A_f} = \frac{12 \times 10^6}{111.3 \times 4.54} = 23{,}748$ psi.

AISC HDBK

LONGEST SPAN WITHOUT LATERAL SUPPORT

$11279 < 23748$ psi. $\therefore$ BEAM "OK"

CHECK MAIN I-BEAM BENDING STRESS AT INTERSECTION WITH MIDDLE CROSS BEAM TWO PLACES:

MOMENT AT 3_3 & BENDING STRESS AT 3_3

$$M_{3_3} = M_{MAX} - 2056.6 \times \frac{47.8}{2}$$

$$= 728611.2 - 49152.7$$

$$M_{3_3} = 679458.5 \text{ IN lb.}$$

$$F_{b\,3_1} = \frac{M}{S} = \frac{679458.5}{64.6} = 10518 \text{ psi.}$$

MOMENT AT 3_4 & BENDING STRESS AT 3_4

$$M_{4_1} = M_{MAX} - \frac{2730.4}{2} \times (111.3 - 47.8)$$

$$= 728611.2 - 86690.2$$

$$M_{4_1} = 641921 \text{ IN lb.}$$

$$F_{b\,4_1} = \frac{M}{S} = \frac{641921}{64.6} = 9937 \text{ psi.}$$

STRESSES WITHOUT FRAME WEIGHT INCLUDED

MAIN I-BEAMS: (#6) WF 16 x 40 329" LONG.

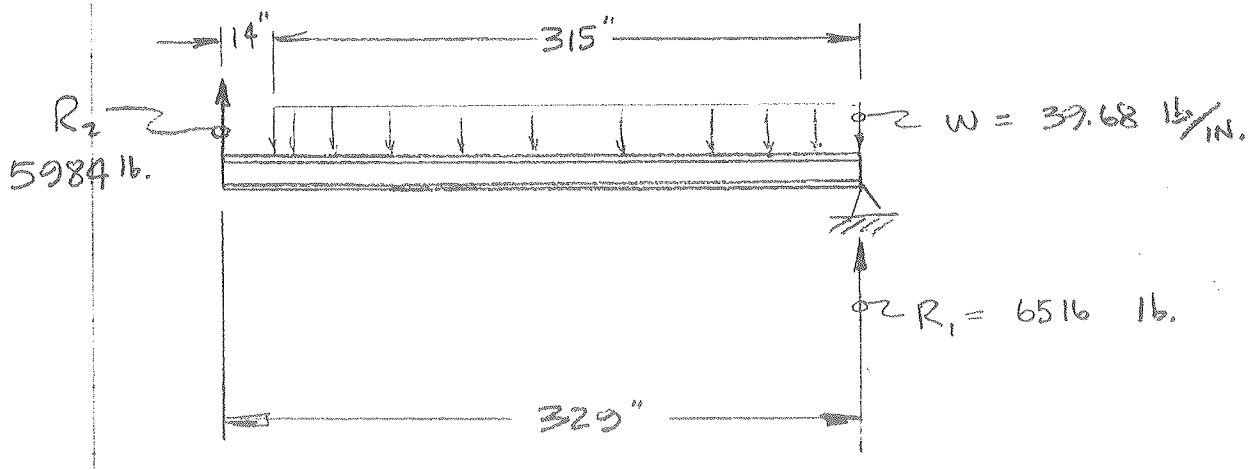

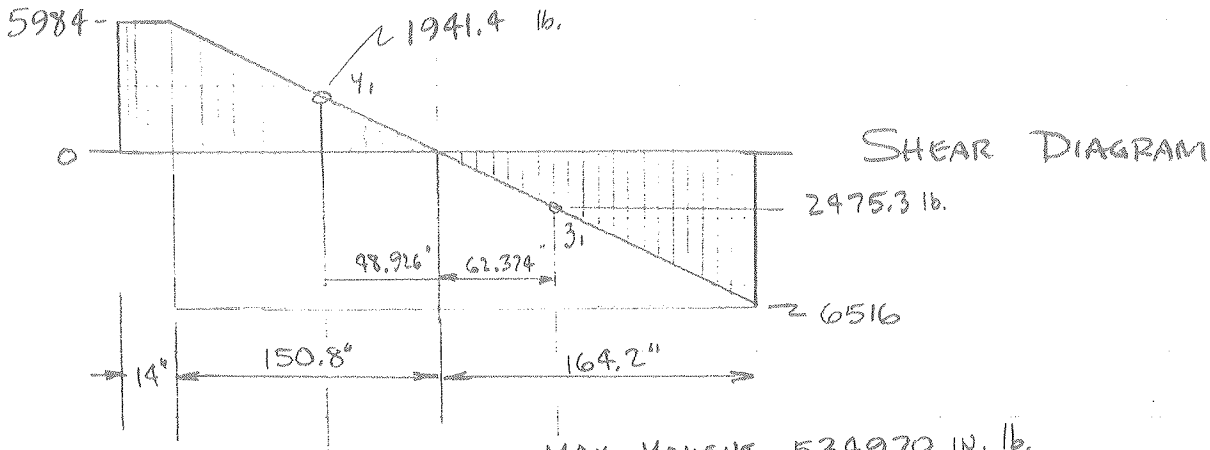

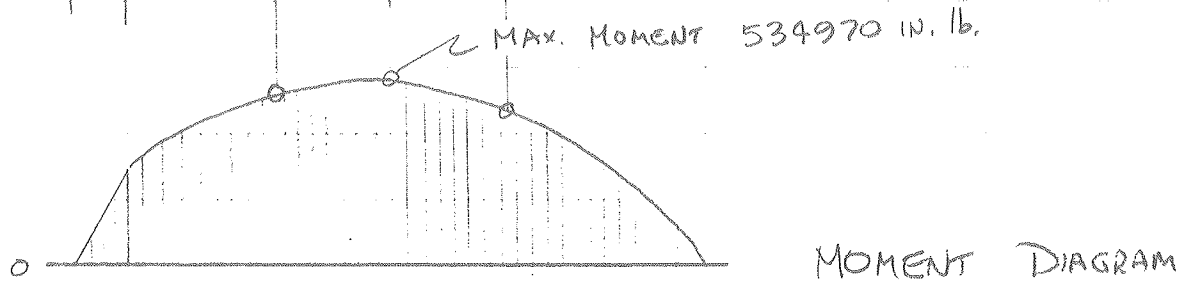

BEAM LOADING:

TOTAL PLATE LOAD = 25,000 lb.

SINCE THERE ARE 2 MAIN BEAMS:

$\therefore$ I-BEAM LOAD = 12500 lb.

$$\text{LOAD/INCH} = \frac{12500\ \#}{315''} = 39.68\ \frac{lb}{IN.}$$

REACTION LOADS

REPLACING DISTRIBUTED LOAD BY CONCENTRATED LOAD AT CENTER

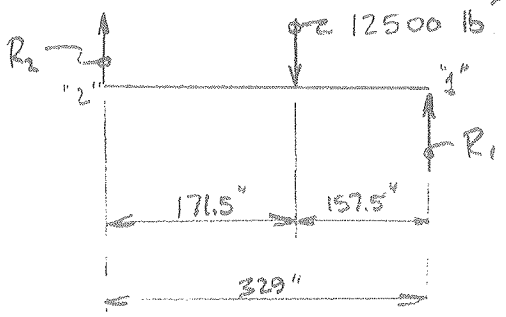

$\Sigma M_1 = 0$

$\therefore\ 12500(157.5) - R_2(329) = 0$

$R_2 = 5984$ lb.

$\Sigma M_2 = 0$

$12500(171.5) - R_1(329) = 0$

$R_1 = 6516$ lb.

$\Sigma F_y = 0$

$R_1 + R_2 - 12500 = 0$

$5984 + 6516 = 12500$

CHECKS

POINT OF ZERO SHEAR :

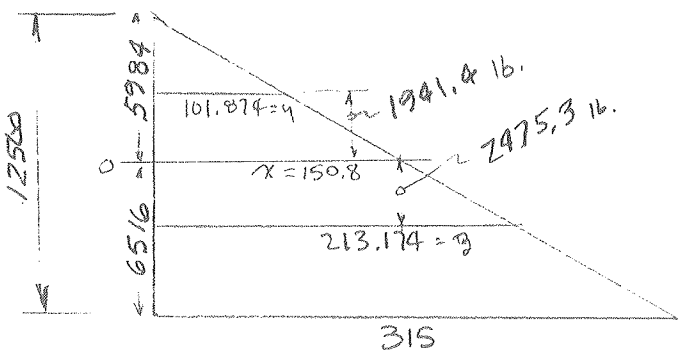

$$\frac{12500}{315} = \frac{5984}{x} \qquad \frac{12500}{315} = \frac{z}{213.174}$$

$x = 150.8''$

$z = 8459.3$

$z_1 = 8459.3 - 5984$

$z_1 = 2475.3$ lb.

$$\frac{12500}{315} = \frac{y}{101.874}$$

$y = 4042.62$

$y_1 = 5984 - 4042.62$

$y_1 = 1941.4$ lb.

MAX. MOMENT : PROPER AREA of SHEAR DIAGRAM

$$= 5984 \times 14 + 5984 \times \frac{150.8''}{2}$$

$$= 83776 + 451194$$

$$= 534970. \text{ IN. lb.}$$

PROPERTIES of WF 16 x 40 :

$S = 64.6 \text{ IN}^3$ $I =$

$d/A_f = 4.54$

$r_T = 1.84$

MAX. BENDING STRESS :

$$F_b = \frac{M}{S} = \frac{534970}{64.6} = \boxed{8,281 \text{ psi}}$$

ALLOWABLE BENDING STRESS : AISC CODE 1.5-7 page 5-14

$$F_b = \frac{12 \times 10^3}{\ell d / A_f} C_b$$

$\ell = 111.3''$ MAX UNBRACED LGT

$d = 4.54$

$C_b = 1$ see 1.5-7

$$F_b = \frac{12 \times 10^3}{111.3 \times 4.54} \times 1 = 23.748 \text{ kip/IN}^2 = \boxed{23748 \text{ psi.}}$$

OR $F_b = \frac{1}{3} F_y = .33 (36000) = \boxed{12,000 \text{ psi.}}$

SAFETY FACTOR : $\frac{36000}{8281} = 4.347$ TO 1

ALLOWABLE SAFETY FACTOR : 3 TO 1

SEE : BELOW THE HOOK LIFTING DEVICES

PAGE 21 30-1,2,2

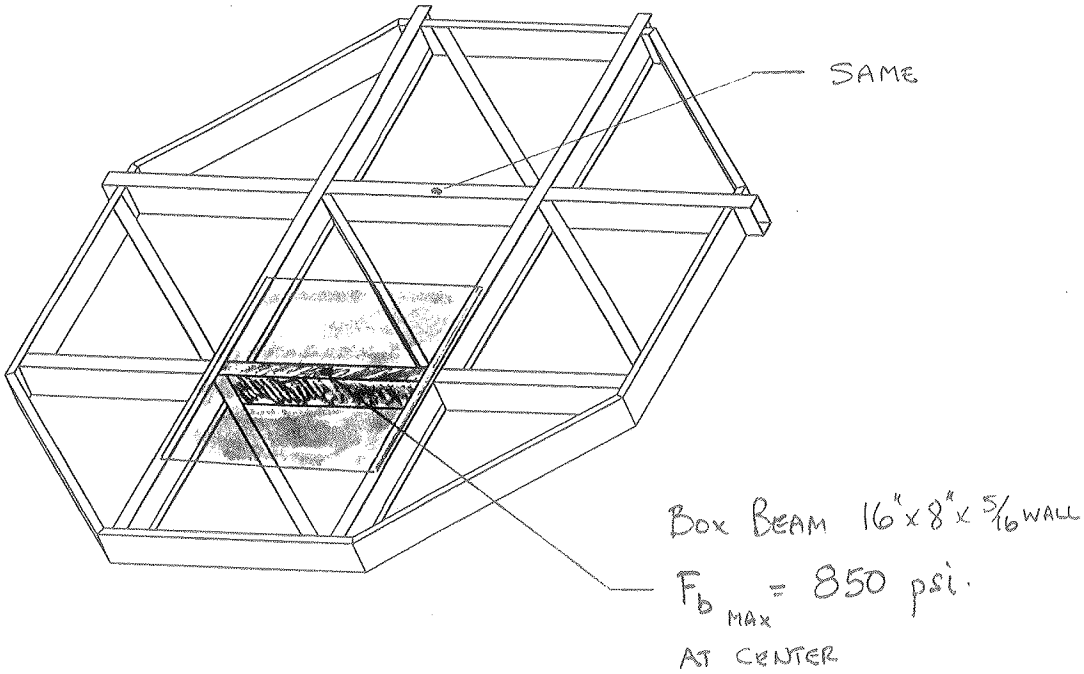

PLATE SIZE USED IN CALCULATIONS

CROSS MEMBERS BETWEEN I-BEAMS: (#8)

RECT. TUBE 16 x 8 x 5/16 WALL 111.3" LONG

ASSUME ALL OF PLATE LOAD IS TAKE BY THIS BEAM, NONE ON THE ADJACENT I-BEAMS.

$$\text{AREA of PLATE} = 111.3'' \text{ WIDE} \times \left(\frac{111.3}{2} + \frac{101.85}{2}\right)$$

$$= 111.3'' \times 106.575''$$

$$= 11861.8 \text{ IN}^2$$

$$\text{WEIGHT} = 11861.8 \text{ IN}^2 \times 1'' \text{ THK} \times \frac{490 \text{ lb.}}{1728 \text{ IN}^3}$$

$$\text{WEIGHT of PLATE} = 3363.6 \text{ lbs.}$$

$$\frac{\text{WEIGHT}}{\text{INCH of BEAM}} = \frac{3363.6 + 430}{111.3} = 34.08 \text{ lb/IN.}$$

WEIGH OF BEAM

WAS 30.78

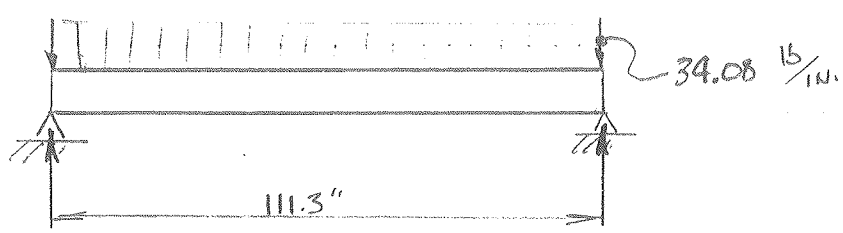

MAX. MOMENT $= \frac{w l^2}{8} = \frac{34.08 \times 111.3^2}{8} = 52778.5$ IN. lb.

PROPERTIES OF $16 \times 8 \times 5/16$ TUBE :

$$I_{TOTAL} = \frac{bh^3}{12} - \frac{b'h'^3}{12}$$

$b = 8 \quad h = 16$

$b' = 7\tfrac{3}{8} \quad h' = 15\tfrac{3}{8}$

$$= \frac{8 \times 16^3}{12} - \frac{7\tfrac{3}{8} \times (15\tfrac{3}{8})^3}{12}$$

$$I_{TOTAL} = 2730.667 - 2233.71$$

$$I = 496.96 \text{ IN}^4$$

MAX. BENDING STRESS (AT CENTER) $= \frac{Mc}{I} = \frac{52778.5 \times 8}{496.96} = 850$ psi.

CHECK $F_{b_{MAX}} \leq \frac{12 \times 10^6}{l d / A_f} = \frac{12 \times 10^6}{\frac{111.3 \times 16}{8 \times .312}}$

$d = 16''$

$A_f = \frac{5}{16} \times 8$

$F_{b_{MAX}} = 16819$ psi.

$= \frac{Y.S.}{3}$ $\frac{\text{(YIELD STRENGHT)}}{\text{FACTOR SAFETY}}$

$850 \text{ psi} < 12{,}000 \text{ psi} < 16819 \text{ psi}.$

$\therefore$ BEAM "OK"

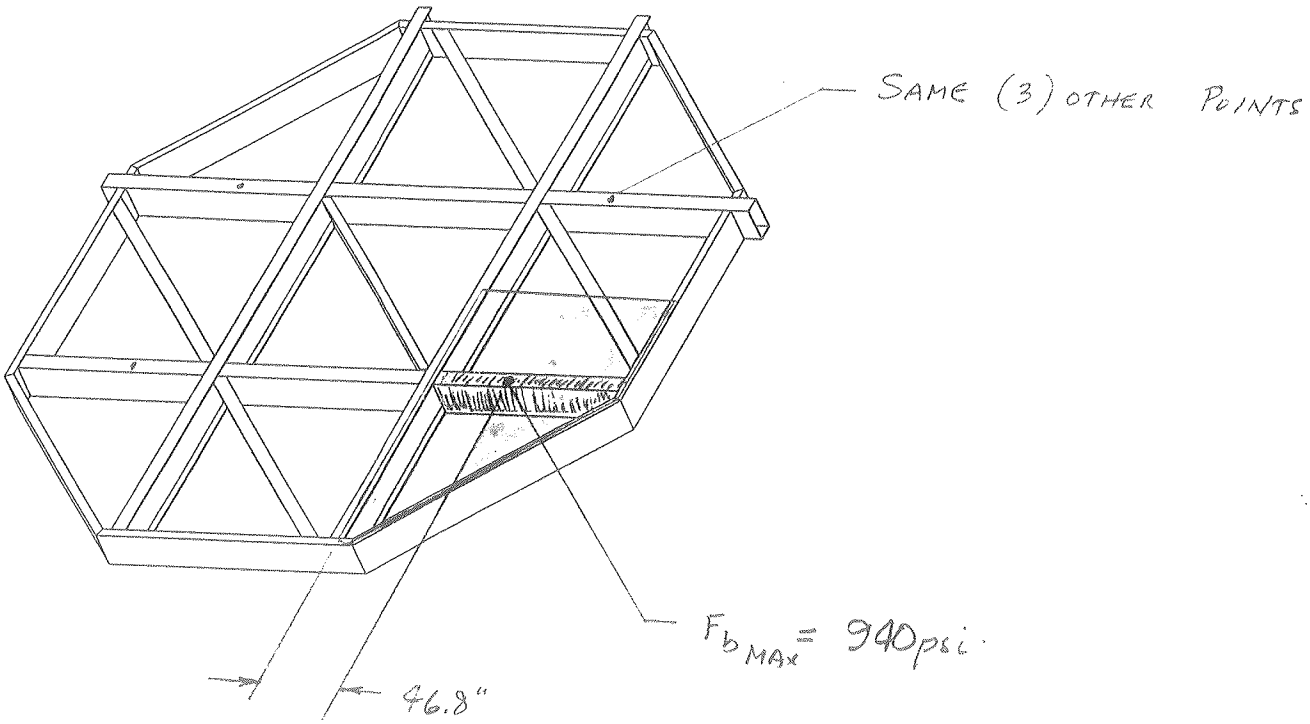

PLATE SIZE USED IN CALCULATIONS

CROSS MEMBER OUTSIDE OF I-BEAMS (# 7)

RECT. TUBE 16 x 8 x 5/16 WALL

ASSUME ALL OF PLATE LOAD IS TAKEN BY THIS BEAM, NONE ON THE ADJACENT I-BEAM.

AREA of PLATE :

$$\frac{111.3}{2} \times 101.326 + 101.326 \times \frac{101.85}{2} = 1079$$

$$5638.8 \text{ IN}^2 + 5160 \text{ IN}^2$$

RECTANGULAR SECTION — TRIANGLUR SECTION

15.78

WEIGHT of PLATE RECT. SECT. = $5638.8 \times 1''\text{THK} \times \frac{490 \text{ lb}}{1728 \text{ IN}^3} = 1599 \text{ lb.}$

WEIGHT of BEAM

$$\frac{\text{WEIGHT}}{\text{INCH of BEAM}} \text{ of RECT. SECT.} = \frac{1599 + 506}{101.326} = 20.77 \text{ lb/IN.}$$

WEIGHT OF TRIANGLE SECTION of PLATE

$$\left(\frac{\text{WEIGHT}}{\text{INCH of BEAM}}\right) \text{ of LONGEST STRIP of TRIANGLAR SECT.} = 101.85 - .5 \times 1''\text{THK} \times \frac{490}{1728}$$

$$= 28.739 \text{ lb/IN.}$$

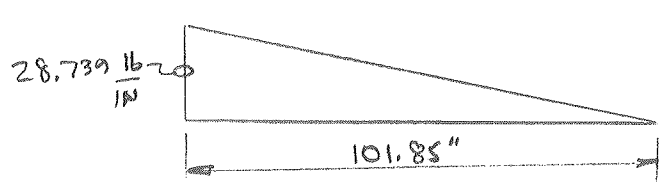

FIRST CHECK STRESS IF PLATE WERE TOTALLY RECTANGULAR NOT TRAPIZOIDAL:

$$\text{PLATE SIZE} = \frac{111.3}{2} \times 101.326 + 101.326 \times 101.85$$

$$= 15958.85 \text{ IN}^2$$

$$\text{WEIGHT of PLATE} = 15958.85 \times 1'' \text{THIC} \times \frac{490 \text{ lb}}{1728 \text{ IN}^3}$$

$$= 4525.4 \text{ lb.}$$

$$\frac{\text{WEIGHT}}{\text{INCH of BEAM}} = \frac{4525.4}{101.85} + 506 = 49.4 \text{ lb/IN.}$$

WEIGHT of BEAM

$$\text{MAX MOMENT (AT CENTER)} = \frac{wl^2}{8} = \frac{49.4 \times 101.85^2}{8} = 64056 \text{ IN}$$

$$\text{MAX. BENDING STRESS} = \frac{Mc}{I} = \frac{64056 \times 8}{496.96} = 1031 \text{ psi.}$$

∴ STRESS WITH ACTUAL TRAPIZOIDAL PLATE WILL BE LESS

COMPUTING TRAPIZOIDAL PLATE STRESS

TRI. SECT. TOTAL WEIGHT $= 28.739 \times \frac{101.85}{2} = 1463.5$ lb

OR

$5160 \text{ IN}^2 \times 1'' \text{ THK} \times \frac{490}{1728} = 1463.2$ lb

---

LOAD ON BEAM IS ADDITION OF BOTH LOADS

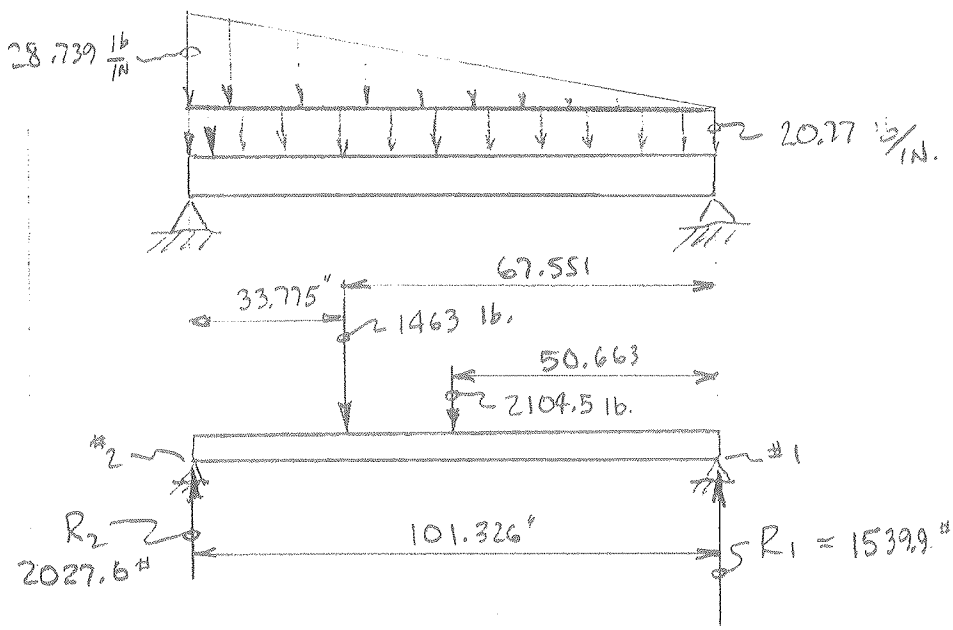

ACTUAL LOAD DIAGRAM

REPLACING WITH EQUALEVANT CONCENTRATED LOAD FOR REACTION CALCULATIONS.

1K.7K

1463

1599

$\Sigma M_1 = 0 \therefore 101.326\, R_2 - 1463(67.551) - 2104.5(50.663) = 0$

$R_2 = 2027.6$ lbs.

$\Sigma M_2 = 0 \therefore 101.326\, R_1 - 33.775(1463) - 50.663(2104.5) = 0$

$R_1 = 1539.9$ lb.

CHECK $\Sigma F_y = 0 \therefore R_1 + R_2 - 1463 - 2104.5 = 0$

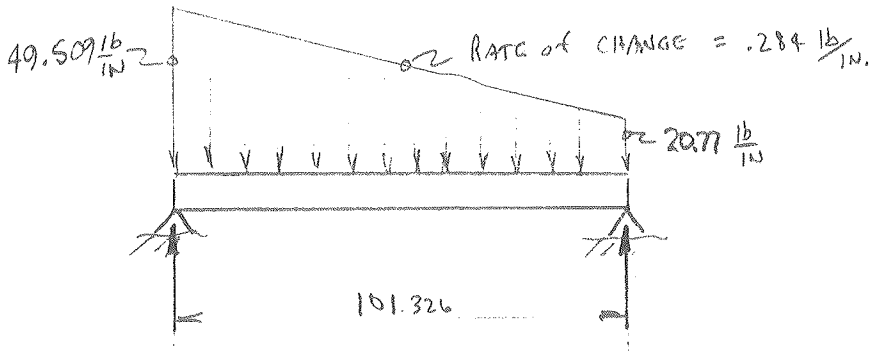

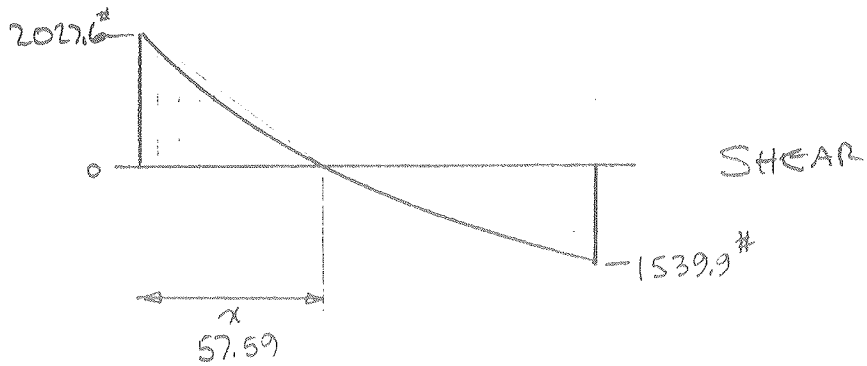

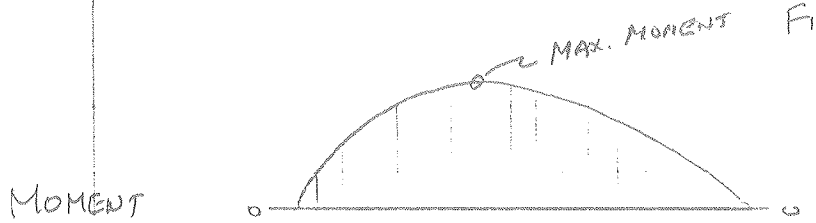

FIND POINT of ZERO SHEAR :

$$\frac{x}{101.326} = \frac{2027.6}{2027.6 + 1539.9}$$

$x = 57.59'$

(ASSUME SHEAR CURVE STRAIGHT)

MAX. MOMENT $= 2027.6 \times \frac{57.59}{2}$

MAX. MOMENT = 58383.7 IN lb

MAX BENDING STRESS $= \frac{Mc}{I}$

$= \frac{58383.7 \times 8}{496.96} = 940$ psi.

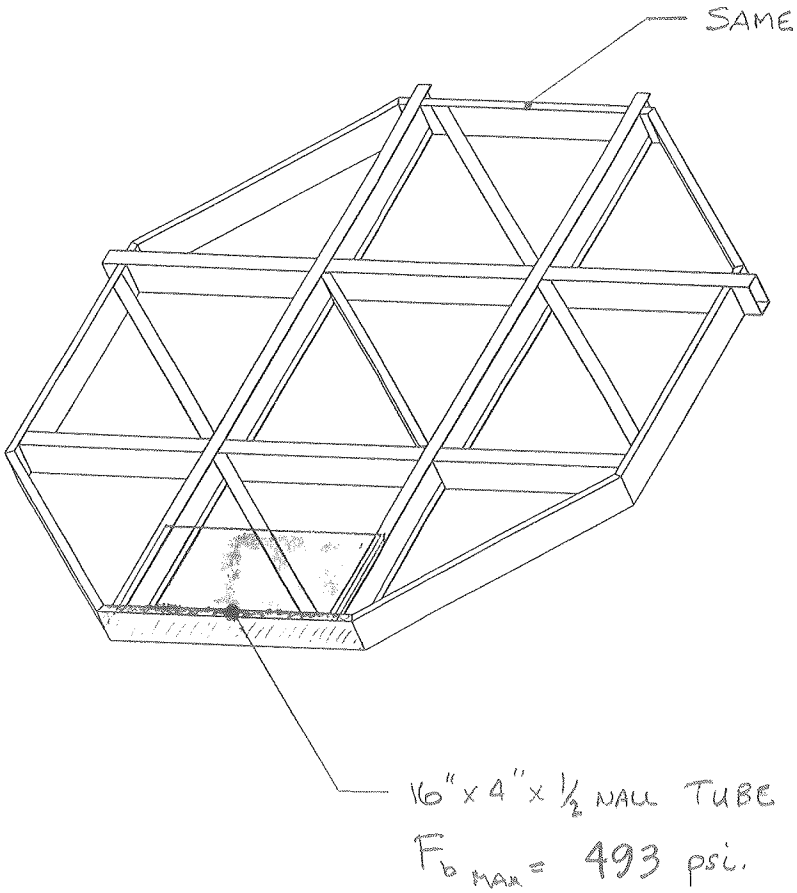

PLATE SIZE USED IN CALCULATIONS

CROSS MEMBER BETWEEN I-BEAM : (# 16)

RECT. TUBE 16" x 4" x ½" WALL

ASSUME ALL PLATE LOAD IS ON THIS MEMBER, NONE ON THE ADJACENT I-BEAMS

AREA OF PLATE = $111.3'' \times \frac{101.85}{2} = 5667.95 \text{ IN}^2$

WEIGHT = $5667.95 \times 1''\text{THK} \times \frac{490 \text{ lb}}{1728 \text{ IN}^3}$

WEIGHT OF PLATE = 1607.23 lb.

BEAM WT

14.44

$$\frac{\text{WEIGHT}}{\text{INCH OF BEAM}} = \frac{1607.23 + 703}{111.3} = 20.76$$

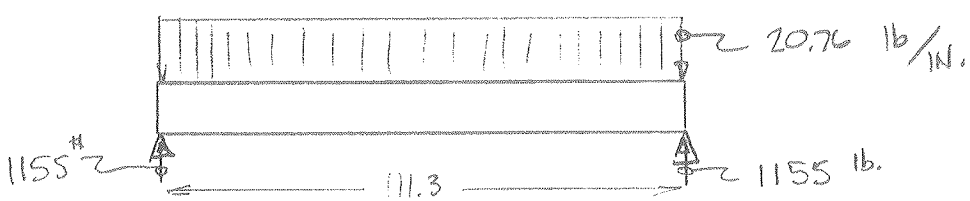

MAX. MOMENT = $\frac{w\ell^2}{8} = \frac{20.76 \times 111.3^2}{8} = 32141$ IN. lb.

PROPERTIES of 16 x 4 x 1/2" TUBE

$$I_{TOTAL} = \frac{bh^3}{12} - \frac{b'h'^3}{12} \qquad b = 4 \quad h = 16 \qquad b' = 3 \quad h' = 15$$

$$I_{TOTAL} = 1365.33 - 843.75$$

$$I_{TOTAL} = 521.583 \text{ IN}^4$$

MAX BENDING STRESS (AT CENTER) $= \frac{Mc}{I} = \frac{32141 \times 8}{521.583} = 493$ psi.

CHECK $F_{b_{MAX}} \leq \frac{12 \times 10^6}{\ell d / A_f}$ $\qquad d = 16 \qquad A_f = 4 \times \frac{1}{2}$

$$F_{b_{MAX}} = \frac{12 \times 10^6}{101.85 \times \frac{16}{2}} = 14727 \text{ psi.}$$

ACTUAL STRESS

YIELD SAFETY FACTOR

493 psi < 12,000 psi < 14727 psi

∴ BEAM "OK"

PLATE & FRAME VERTICAL :

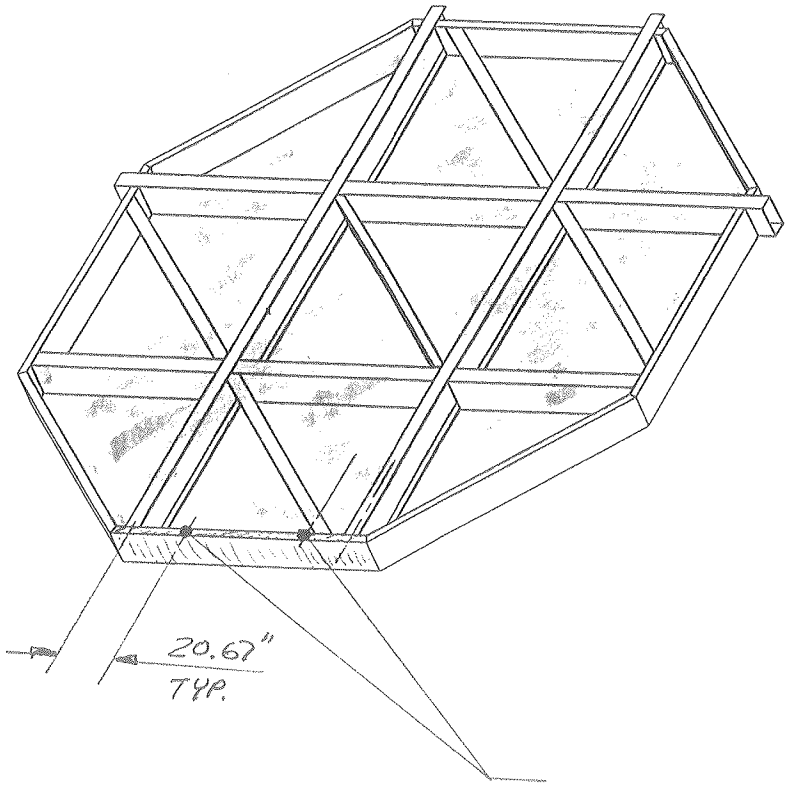

TENSION MAX. 10303 psi < 15333 psi ALLOWABLE

SHEAR MAX. 5293 psi < 10222 psi ALLOWABLE

PLATE SIZE USED IN CALCULATIONS

7-28-98

ITEM Nº 16

BOTTOM EDGE BEAM, STRESS WHEN PLATE VERTICAL

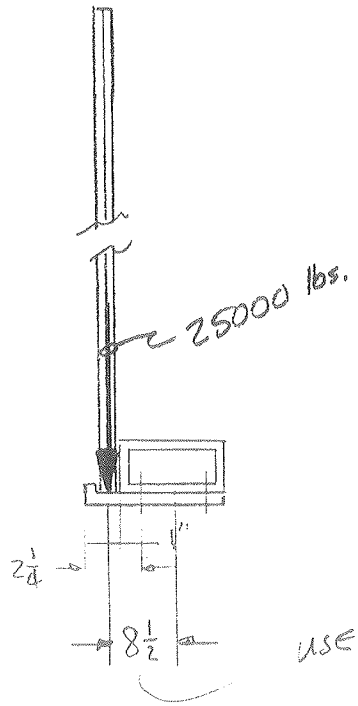

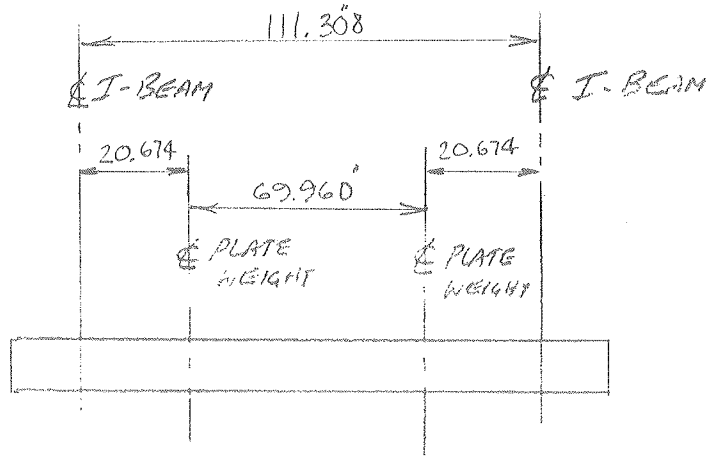

THREE TYPES of STRESSES; BENDING, SHEAR, TORSIONAL SHEAR

TORSION = 8.75 x 12500 lb. = 109375 in. lb.

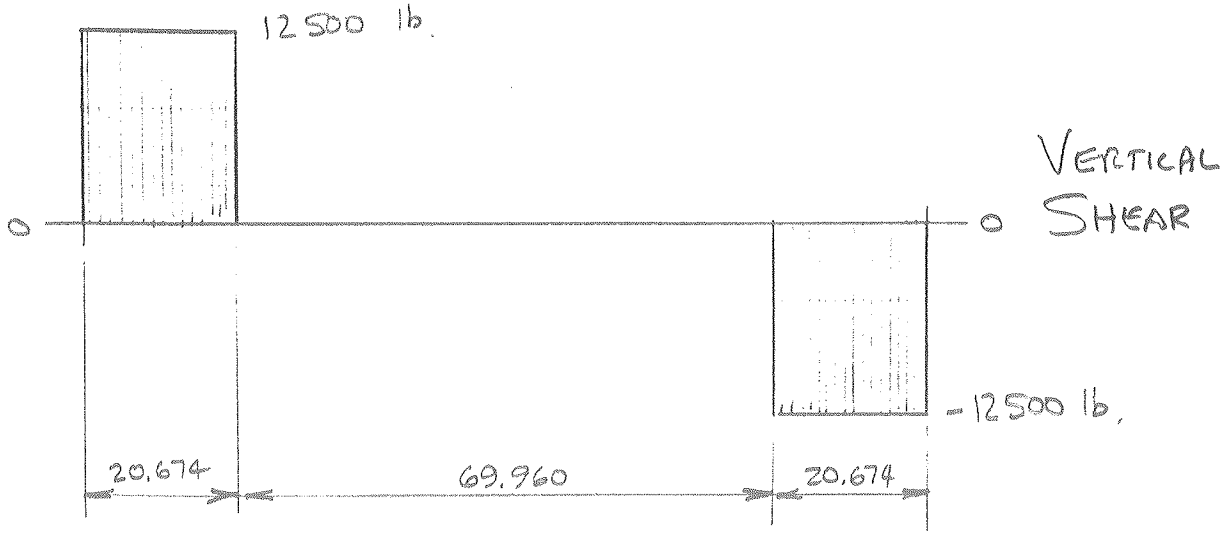

VERTICAL SHEAR

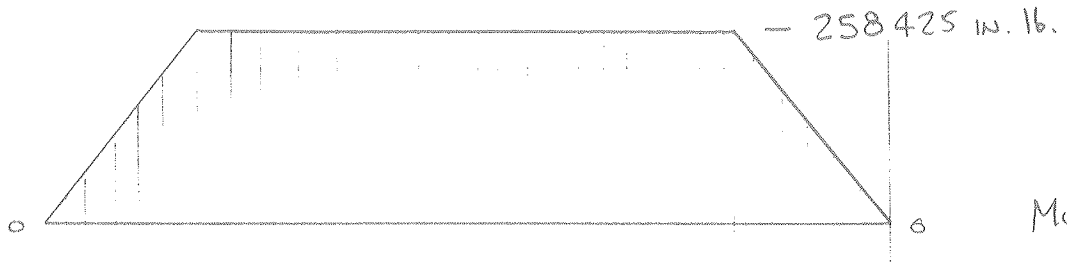

MOMENT

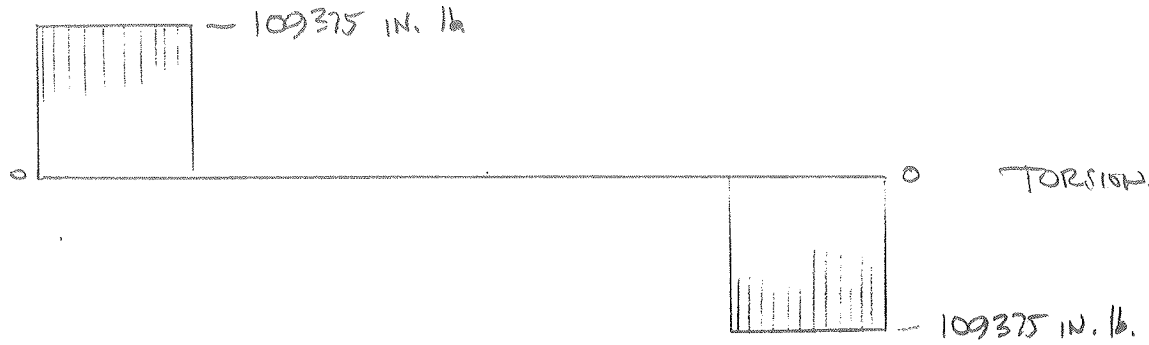

TORSION.

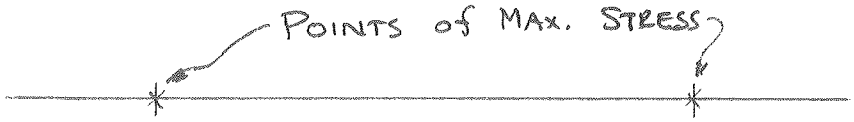

SUMMARY

7-28-98

STRESSES AT MAX. STRESS POINTS:

VERTICAL SHEAR STRESS:

$$F_{VS} = \frac{P}{A} = \frac{12500 \text{ lb}}{19}$$

$$F_{VS} = 658 \text{ psi.}$$

A = CROSSSECTIONAL BEAM AREA

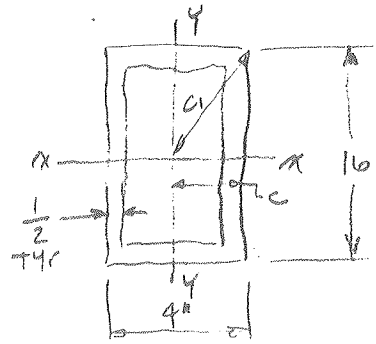

BENDING STRESS:

$$F_b = \frac{Mc}{I} = \frac{258925 \times 2}{51{,}583}$$

$$F_b = 10{,}020 \text{ psi.}$$

$$A = 16 \times 4 - 15 \times 3$$

$$A = 19 \text{ IN}^2$$

$$I_{yy} = \frac{bh^3}{12}$$

$$= \frac{16 \times 4^3}{12} - \frac{15 \times 3^3}{12}$$

$$I_{yy} = 51.583 \text{ IN}^4$$

$$c = 2''$$

TORSIONAL SHEAR STRESS:

$$\frac{c_1 \quad 8}{2}$$

$$F_{TS} = \frac{Tc_1}{J}$$

$$c_1 = \sqrt{8^2 + 2^2}$$

$$c_1 = 8.246$$

$$J = I_{xx} + I_{yy}$$

$$I_{xx} = \frac{bh^3}{12} =$$

$$= \frac{4 \times 16^3}{12} - \frac{3 \times 15^3}{12}$$

$$I_{xx} = 1365.33 - 843.75$$

$$I_{xx} = 521.58 \text{ IN}^4$$

$$J = 521.58 + 51.583$$

$$J = 573.16 \text{ IN}^4$$

$$= \frac{109375 \times 8.246}{573.16}$$

$$F_{TS} = 1574 \text{ psi.}$$

COMBINED VERTICAL SHEAR & TORSIONAL SHEAR:

$$C^2 = A^2 + B^2$$

$$\text{COMB. SHEAR} = \sqrt{F_{TS}^2 + F_{VS}^2} = \sqrt{1574^2 + 658^2}$$

$$\text{COMB. SHEAR} = 1706 \text{ psi.}$$

COMB. BENDING & SHEAR:

$$\text{SHEAR MAX.} = F_{S_{MAX}} = \pm \frac{1}{2}\sqrt{F_b^2 + 4F_{S_{comb}}^2}$$

$$F_{S_{MAX}} = \pm \frac{1}{2}\sqrt{10{,}020^2 + 4(1706)^2}$$

$$F_{S_{MAX}} = 5292.5 \text{ psi.}$$

$$\text{BENDING MAX} = F_{b_{MAX}} = \frac{F_b}{2} \pm F_{S_{MAX}} = \frac{10{,}020}{2} \pm 5292.5$$

$$F_{b_{MAX}} = 10302.5 \text{ psi}$$

$\therefore$ MAX TENSION STRESS = $\boxed{10303 \text{ psi}}$

MAX SHEAR STRESS = $\boxed{5293 \text{ psi.}}$

ALLOWABLE STRESSES:

PER DWG # AAA97-102725-C SHT 1 OF 10

TENSILE/COMPRESSIVE YIELD $= \frac{46,000}{3} = 15333$ psi MAX

PER UNDER HOOK SPEC.

SHEAR YIELD $= \left[\frac{2}{3} \times 46,000\right] \times \frac{1}{3} = 10222$ psi. MAX.

PER UNDER HOOK SPEC

PER AISC SPEC. 1.5.1.2 pp 5-123

SINCE MAX. TENSION = 10303 psi < 15333 psi

& MAX SHEAR = 5293 psi < 10222 psi

THIS BEAM IS "OK"

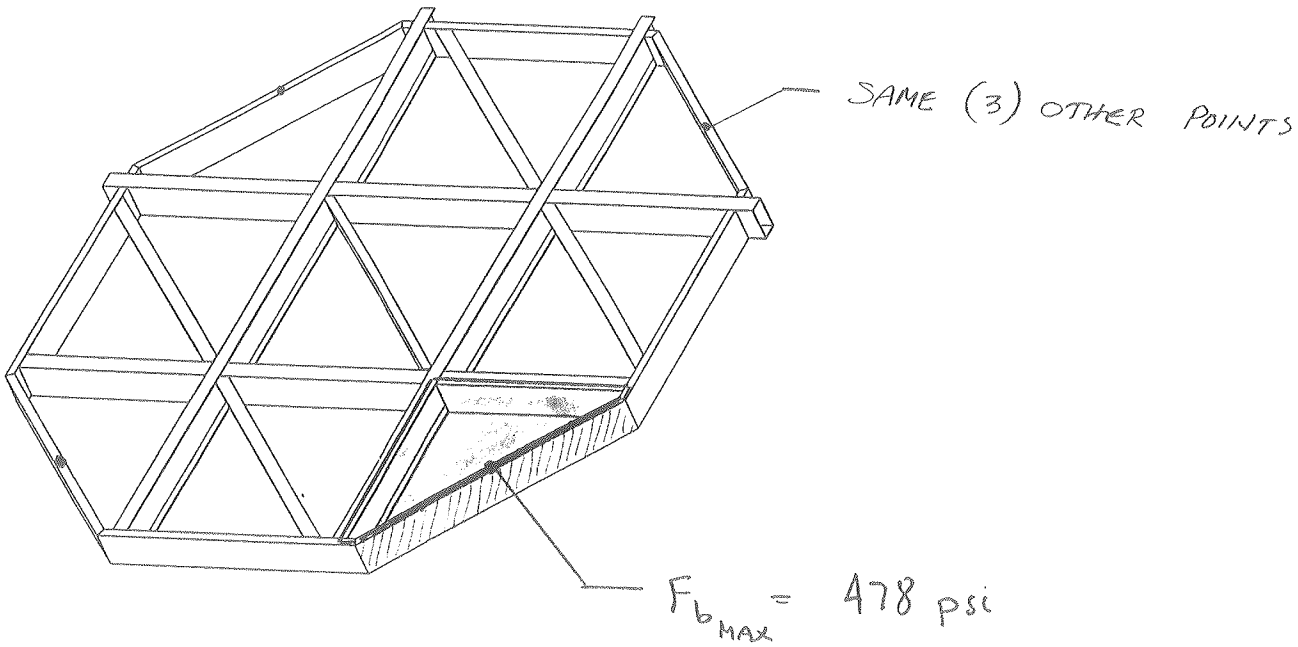

PLATE SIZE USED IN CALCULATIONS

DIAGONAL BEAM STRESS:

ASSUME PLATE LOAD ALL ON THIS BEAM. SEE PAGE 1

$$\text{PLATE WEIGHT} = 101.326'' \times \frac{101.85}{2} \times 1'' \times \frac{490\ \text{lb}}{1728} = 1463.2\ \text{lb.}$$

$$\frac{\text{WEIGHT}}{\text{INCH of BEAM}} = \frac{1463.2 + 448}{130.461} \approx 14.65\ \text{lb./IN.}$$

BEAM WEIGHT

$$M_{MAX} = \frac{w l^2}{8} = 14.65 \times \frac{130.461^2}{8} = 31167\ \text{IN. lb.}$$

$$F_{b_{MAX}} = \frac{Mc}{I} = \frac{31167 \times 8}{521.58\ \text{IN}^4} = \boxed{478\ \text{psi.}}$$

CHECK $F_{b_{MAX}} \leq \dfrac{12 \times 10^6}{l d / A_f}$ $\qquad d = 16$, $\quad A_f = 4 \times \frac{1}{2}$

$$F_{b\ MAX.} = \frac{12 \times 10^6}{130.461 \times \frac{16}{2}} = 11497\ \text{psi.}$$

$$478\ \text{psi} < 11497\ \text{psi} < 12{,}000\ \text{psi.}$$

$\therefore$ BEAM "OK"

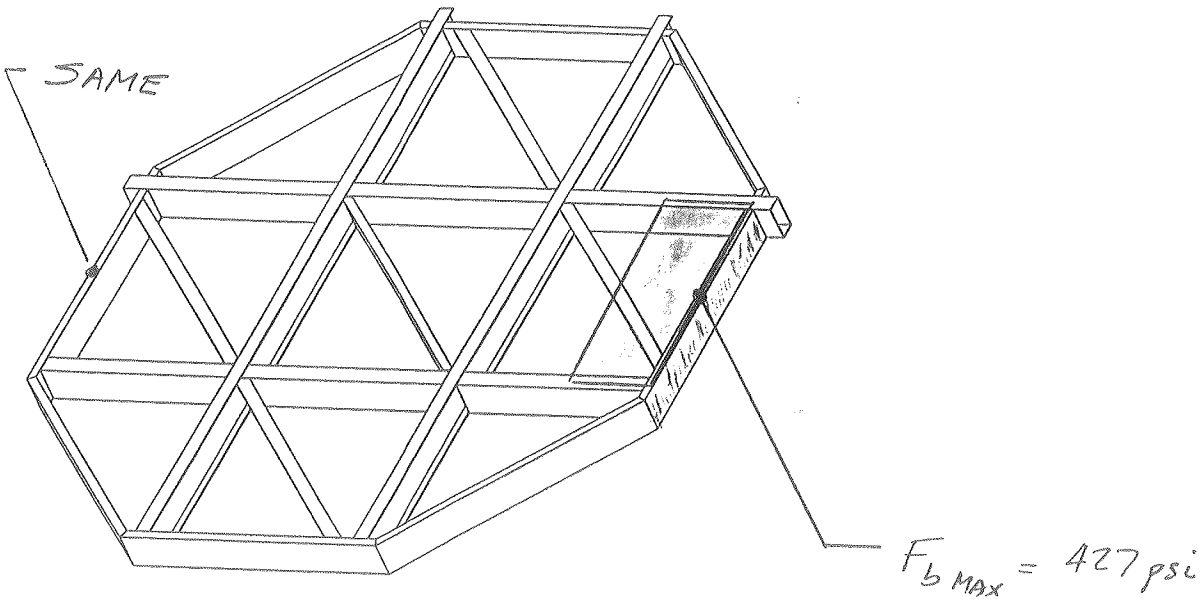

PLATE SIZE USED IN CALCULATIONS.

SIDE EDGE BEAM STRESS :

ASSUME PLATE LOAD SHOWN ON PAGE 1
IS TOTALLY ON THIS BEAM

$$\text{PLATE WEIGHT} = 111.3 \times \frac{101.326}{2} \times 1'' \times \frac{490 \text{ lb}}{1728 \text{ IN}^3} = 1599 \text{ lb.}$$

$$\frac{\text{WEIGHT}}{\text{INCH of BEAM}} = \frac{1599 + 401}{111.3} = 17.97 \frac{\text{lb}}{\text{IN.}}$$

$$\text{MOMENT}_{MAX} = \frac{w\ell^2}{8} = \frac{17.97 \times 111.3^2}{8} = 27825 \text{ IN. lb.}$$

$$\text{BENDING STRESS} = F_b = \frac{Mc}{I} = \frac{27825 \times 8}{521.58 \text{ IN}^4} = \boxed{427 \text{ psi.}}$$

$$\text{CHECK} \quad F_{b_{MAX}} \leq \frac{12 \times 10^6}{\ell d / A_f} \qquad d = 16 \qquad A_f = 4 \times \tfrac{1}{2}$$

$$F_{b_{MAX}} \leq \frac{12 \times 10^6}{111.3 \times 16/2} = 13477 \text{ psi.}$$

YIELD $\times \frac{1}{3}$

$$427 \text{ psi} < 12{,}000 \text{ psi} < 13477 \text{ psi}$$

$\therefore$ BEAM IS "OK"

CONNECTION TYPE I

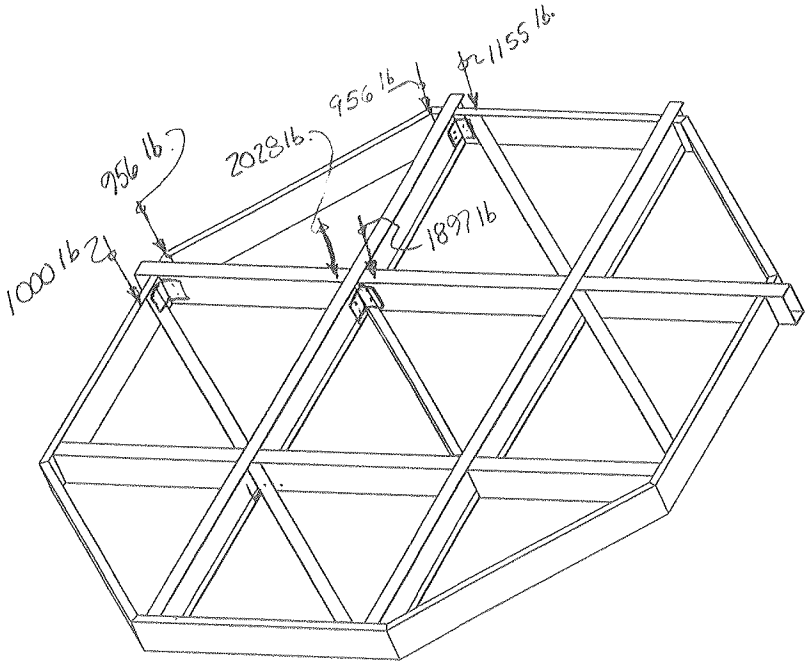

JOINT LOADS: SEE SHEAR DIAGRAM for END REACTION OF RESPECTIVE BEAM

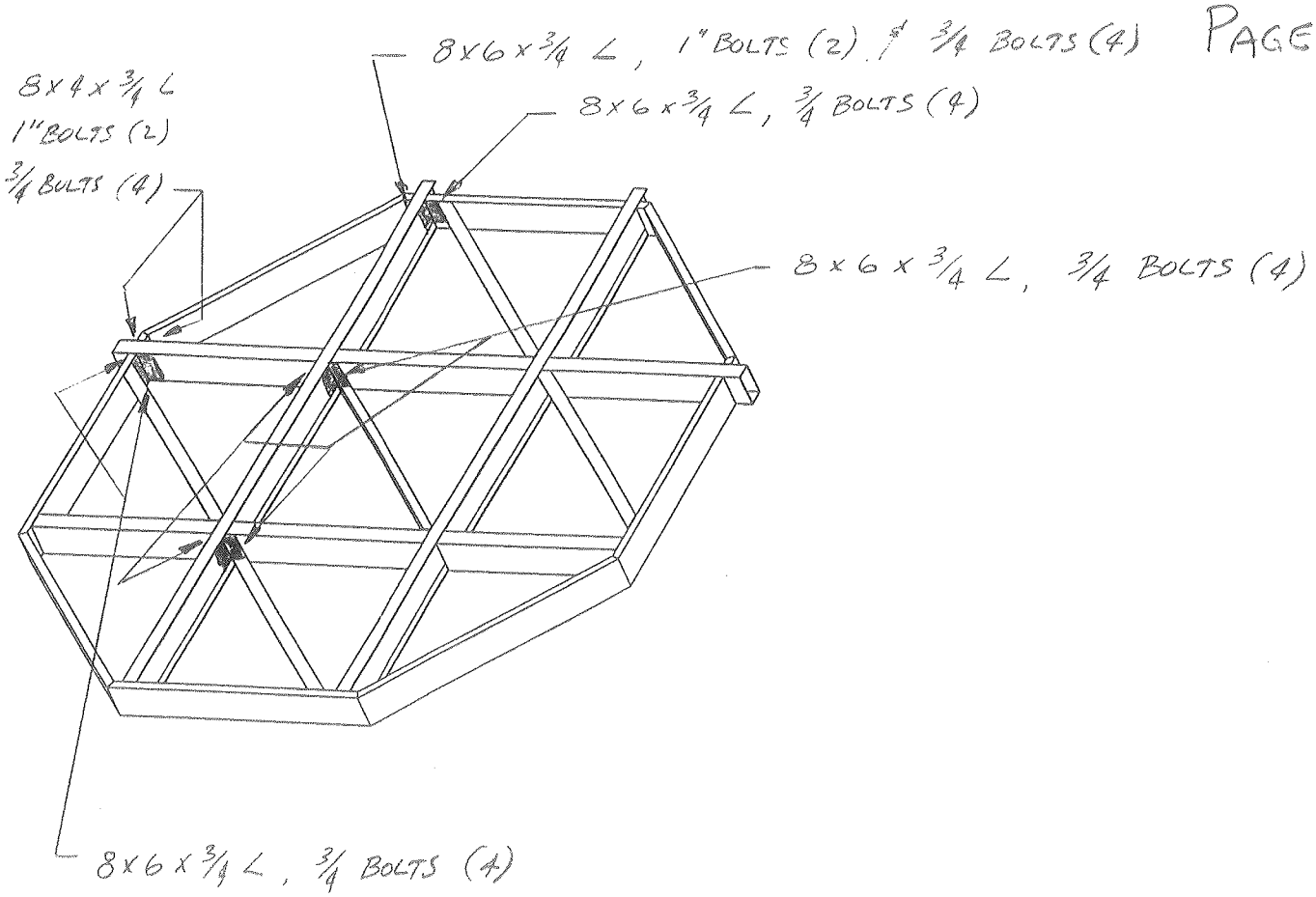

CONNECTION TYPE I

8-8-98

BOLTED JOINTS : BOLT STRESSES

CONNECTION TYPE I

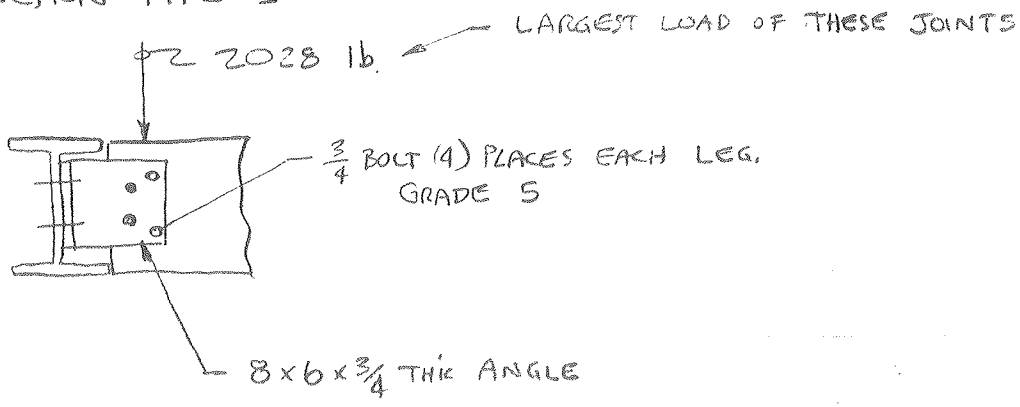

ALLOWABLE SHEAR STRESS ON BOLTS = 13,500 psi.

GRADE 5 (ASTM A 325) for BRIDGES

AISC HDBK TABLE 2 pp 5-193 7th EDITION

3/4 -10 BOLT STRESS AREA = .334 IN^2

IF ALL LOAD ON ONE BOLT = $\frac{2028 \text{ lb}}{.334 \text{ IN}^2}$ = 6072 psi.

SINCE 6072 < 13500 psi ALLOWABLE

AND 2028 lb. IS THE GREATEST LOAD ACROSS ALL JOINTS SHOWN ON PAGE 1.

ALL BOLT WILL HAVE SHEAR STRESS BELOW 6072 psi

3-5-98

CONNECTION TYPE I

AISC HDBK BOLTED BEAM CONNECTIONS pp 4-20

TABLE 1 FOR WF 16 4 BOLTS - A325

15,000 psi MAX. SHEAR

ALLOWABLE LOAD = 53,000 lb ON JOINT

ANGLE THICKNESS TO BE 1/4"

WORST CASE JOINT = 2028 lb < 53000 lb

ACTUAL ANGLE THICKNESS 3/4" > 1/4" AISC THICKNESS

∴ JOINTS WILL WORK

BOLTED JOINT

CONNECTION TYPE I

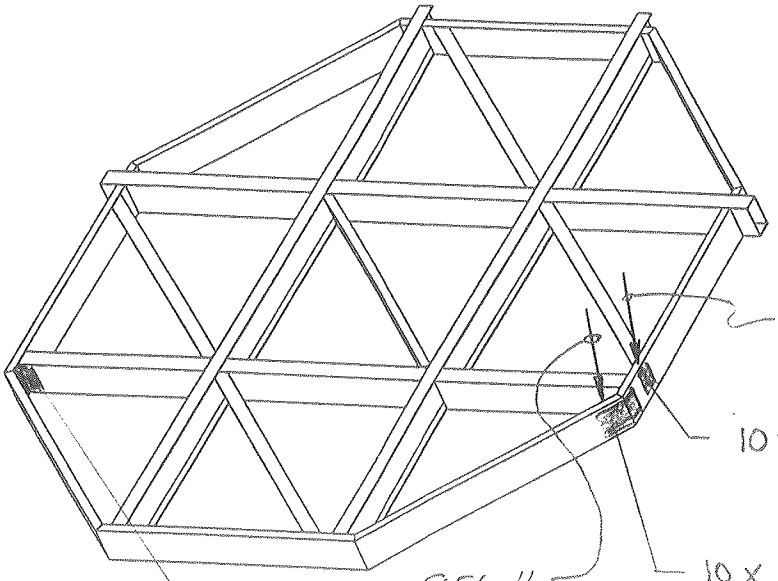

1000 lb

10 x 6 x 3/4 , 3/4 BOLTS (4)

956 lb

10 x 18 x 3/4 , 10 x 10 1/2 x 3/4

3/4 BOLTS (4) OR 1" BOLT (2) & 3/4 BOLT (2)

8 x 6 x 3/4 ∠ , 3/4 BOLTS (4)

8 x 4 x 3/4 ∠ , 1" BOLT (2) OR 3/4 BOLTS (4)

8-12-98

CONNECTION TYPE II

BOLTED JOINTS ; BOLT STRESSES

LARGEST LOAD = 1000 lb

IF ALL LOAD ON ONE BOLT

3/4-10 BOLT STRESS

AREA = .334 in^2

THAN SHEAR STRESS = $F_s = \frac{P}{A} = \frac{1000}{.334}$

F_s = 2994 psi.

SINCE 2994 < 13500 psi ALLOWABLE

THESE CONNECTIONS WILL WORK

CONNECTION TYPE III

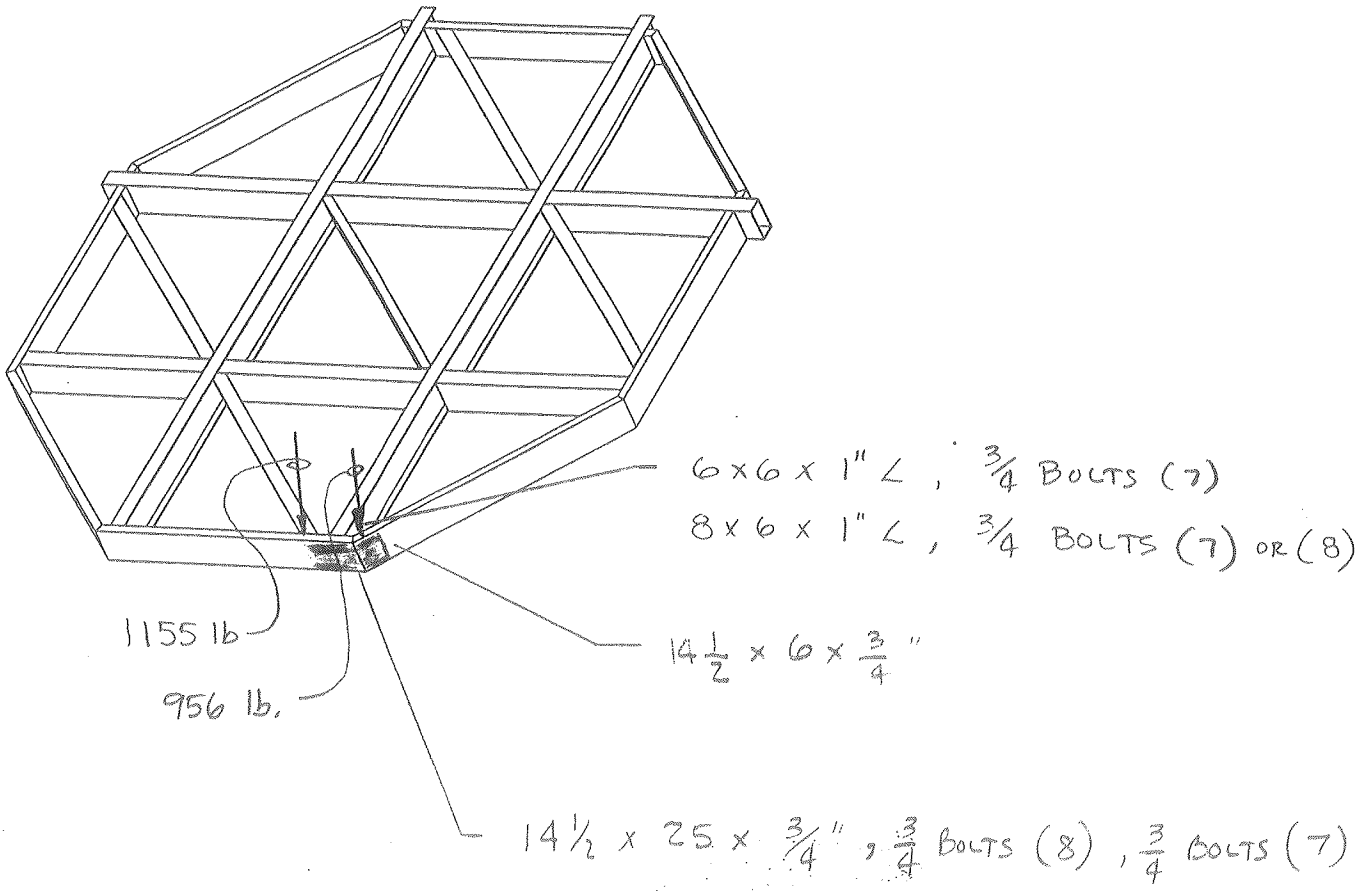

CONNECTION TYPE III

BOLT STRESSES ;

LARGEST LOAD = 1155 lb.

IF ALL LOAD ON ONE BOLT, THAN

SHEAR STRESS = $F_S = \frac{P}{A} = \frac{1155}{.334} = 3458$ psi.

SINCE 3458 psi < 13500 psi ALLOWABLE

THIS CONNECTION WILL WORK

CONNECTION TYPE IV

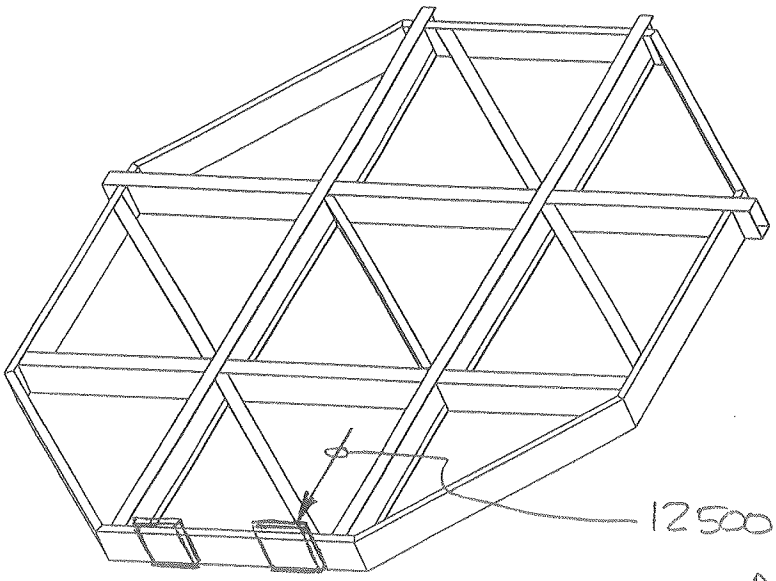

CONNECTION TYPE IV

5 BOLTS IN 2 LINES

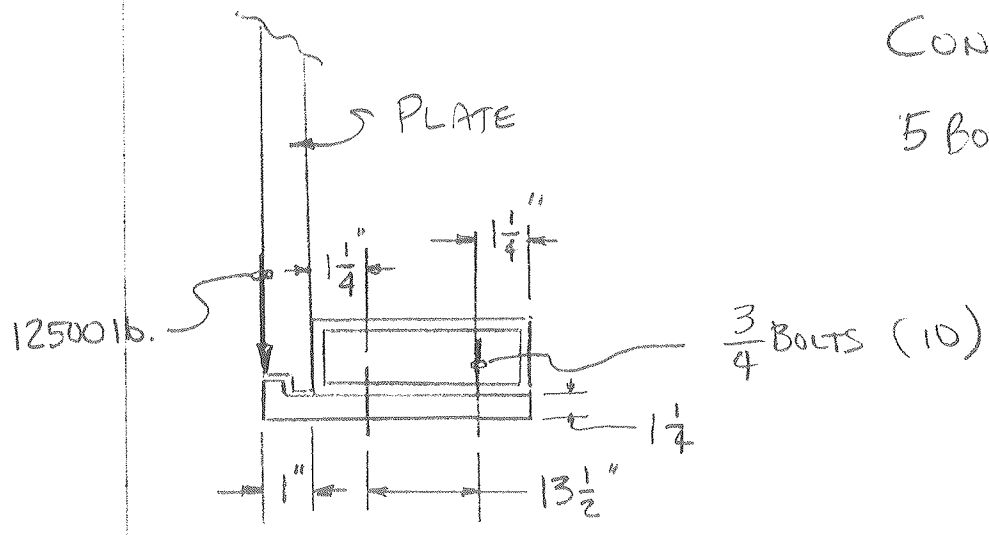

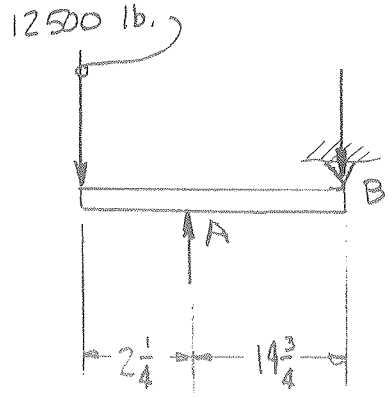

$\Sigma M_B = 0$

$14\frac{3}{4}(F_A) - 17(12500) = 0$

$F_A = 14407$ lb.

$\Sigma M_A = 0$

$14\frac{3}{4}(F_B) = 2\frac{1}{4}(12500)$

$F_B = 1907$ lb.

SHEAR

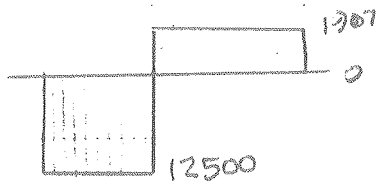

MOMENT

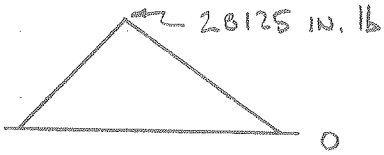

$\Sigma F_y = 0$

$12500 + 1907 = 14407$

BOLT TENSILE STRESS $= F_T = \frac{P}{A}$

USE BOLT NEAREST PLATE, $F_T = \frac{14407}{.334} \times \frac{1}{2} = 21567_p$

ASSUME 2 OF 5 BOLTS AT THIS DISTANCE TAKE LOAD

CONNECTION TYPE IV

ALLOWABLE TENSION STRESS = 36,000 psi

GRADE 5

AISC HDBK 7th EDITION
TABLE 2 pp 5-193

SINCE 21567 psi < 36000 psi
THIS CONNECTION IS "OK"

CHECK BENDING STRESS IN PLATE

$$F_b = \frac{Mc}{I}$$

$$c = \frac{1.25}{2} = .625$$

$$I = \frac{bh^3}{12} = \frac{20 \times 1.25^3}{12}$$

$$I = 3.2552 \text{ IN}^4$$

$$F_b = \frac{28125 \times .625}{3.2552}$$

$$F_b = 5400 \text{ psi}$$

SINCE 5400 psi < 12,000 psi ALLOWABLE

PLATE "OK"

$$\frac{\text{YIELD}}{3} = \frac{36,000 \text{ psi}}{3}$$

A-36 STEEL

FERMILAB
ENGINEERING NOTE

SECTION	PROJECT	SERIAL-CATEGORY	PAGE
			1

SUBJECT: LIFT POINT AND WEIGHT BALANCE

NAME: JIM KILMER

DATE: 8/17/99

REVISION DATE:

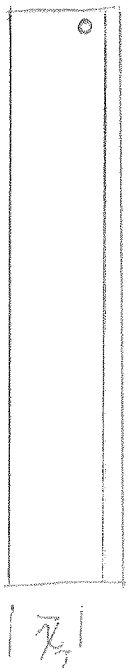

CG_{SB} : 8" AND 12,000 lbs

$CG_{TOT} = x$ AND 12,000 lbs + 24,000 lbs

COMPONENT	w	$\bar{x}$	$\bar{x}w$
PLATE	24,000 lb	16.5 in	396,000 in lb in
STRONGBACK	12,000 lb	8 in	96,000 lb in
	36,000 lb		$\Sigma \bar{x}w$ = 492,000 lb in

$$\bar{x}_T = \frac{\Sigma \bar{x} w}{\Sigma w} = \frac{492{,}000 \text{ lb in}}{36{,}000 \text{ lb}}$$

$$\bar{x}_T = 13.67 \text{ in}$$

NORM BOSEK DID SAME CALCULATION & HIS NUMBER IS

16" − 2.36" = 13.64" (COPY ATTACHED)

MOVE TWO THINGS,

1. ROLLER AXIS NOW MOVES TOWARD CG DIRECTION. IT'S X DIMENSION FROM BACK FACE IS NOW 9.25". (BEFORE IT WAS 2" FROM THE BACK FACE.)

   THIS MEANS THAT FOR THE EMPTY STRONGBACK THE ROLLER IS ALREADY ON THE GOOD SIDE OF THE CG LINE AND NO FORCE ON BOTTOM IS REQUIRED TO SET DOWN THE STRONGBACK

2. MOVE STRONGBACK PICK POINT FARTHER FROM BACK FACE. NOW SITTING AT ~ 13.12" FROM BACK FACE.

CHOOSE AN $\bar{x}$ FOR THE PICKPOINT SUCH THAT A WEIGHT 1.25X AS LARGE (LOAD TEST) IS HELD VERTICAL.

COMPONENT	w	$\bar{x}$	$\bar{x}w$
LOAD	30,000 lb	16.5 in	495,000 in lb
STRONGBACK	12,000 lb	8 in	96,000 in lb

$\Sigma w = 42{,}000$ lb $\qquad \Sigma \bar{x}w = 591{,}000$ in lb

$$\bar{x}_T = \frac{\Sigma \bar{x}w}{\Sigma w} = \frac{591{,}000 \text{ in lb}}{42{,}000 \text{ lb}}$$

$$= 14.07 \text{ in} \quad \text{MINIMUM}$$

WHAT IS THE ANGLE FOR THIS?

LENGTH OF SUPPORT I BEAM = 329"
WIDTH OF OUTER RIM BEAM = 4"
TOTAL 333"

NEW PLATE WITH PICK POINT WILL ADD 2" TO THIS TOTAL
= 335"

CHECK FOR AMOUNT PER DEGREE OF ANGLE

$$\sin\theta = \sin 1^\circ = \frac{x}{335''}$$

$$x = 5.85''/2 = 2.92 \text{ in (ABOUT CG POINT)}$$

AMOUNT REQUIRED TO HOLD CG UNDER/OVER ROLLER CENTER

$$13.64'' - 9.25'' = 4.4'' \text{ (ABOUT THE TOP PICK POINT)}$$

$$\text{OR } \frac{4.4''}{2.92''/^\circ} = \underline{1.5 \text{ degree}}$$

GO FARTHER THAN MINIMUM 14" TO 15" FROM BACK.

THEN FROM CG POINT HOOK POINT IS 15" − 13.67" = +1.33"

ROLLER DISTANCE FROM CG IS 9.25" − 13.67 = −4.4"

NEED TO PULL BOTTOM OVER AT AN ANGLE TO MOVE CG TO THE RIGHT SIDE OF ROLLER PIVOT POINT

MINIMUM DISTANCE TO MOVE BOTTOM IS

$$+1.33 - (-4.4") = \sim 5.75"$$

ANGLE IS THEN $\frac{5.75"}{2.92"/o} = 1.97$ DEGREES

CALCULATE FORCE REQUIRED

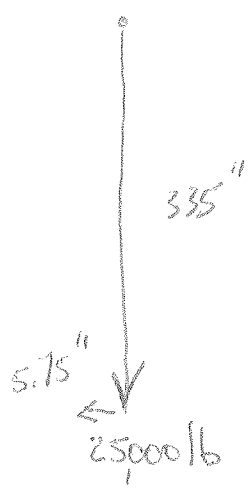

$$\frac{25{,}000\,lb}{335"} = \frac{x}{5.75"}$$

$x = 429$ lbs FORCE TO PULL BOTTOM OVER MINIMUM AMOUNT TO PUT CG PAST THE ROLLER PIVOT POINT.

SHEER IN WELD ON 1½" PLATE TO I BEAM CONNECTION

TOTAL LENGTH IS 44" OF 3/8" WELD

$$\text{THROAT} = \frac{.375\,in}{\sqrt{2}} = .27\,in$$

$$\text{AREA OF WELD} = 44'' \times .27''$$
$$= 11.67\,in^2$$

FORCE AT LOAD TEST LOAD IS

$$25{,}000\,lb \times 1.25 + 12{,}000\,lb = 43{,}250\,lb$$

SHEAR STRESS IS $\sigma = \frac{F}{A} = \frac{43{,}250\,lb}{11.67\,in^2} = 3706\ PSI$

3706 PSI < 10,000 PSI FOR PLATE SO OK FOR LIFTING FIXTURE.

WELD ROD OK WITH EITHER E60 OR E70 ROD.

FERMILAB
ENGINEERING NOTE

SECTION	PROJECT	SERIAL-CATEGORY	PAGE
			4

SUBJECT	NAME	
	DATE	REVISION DATE

FERMILAB
ENGINEERING NOTE

SECTION	PROJECT	SERIAL-CATEGORY	PAGE
			5

SUBJECT: CONNECTION PLATES FOR HOIST RINGS

NAME:

DATE:

REVISION DATE:

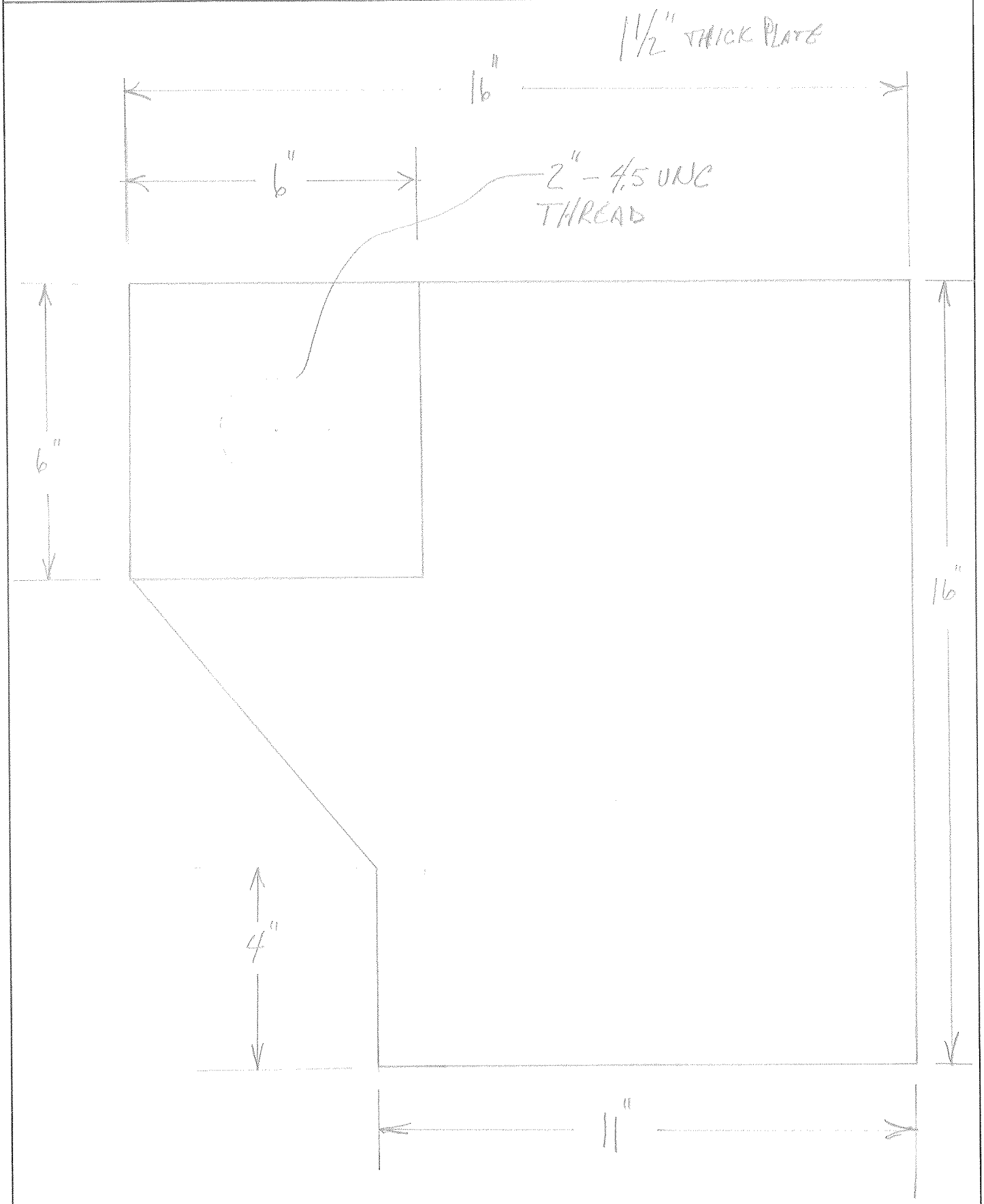

FERMILAB
ENGINEERING NOTE

SECTION	PROJECT	SERIAL-CATEGORY	PAGE
			6

SUBJECT	NAME	
	DATE	REVISION DATE

LEFT SIDE I BEAM

RIGHT SIDE I BEAM

8-28-98

PAGE 1

N. BOSEK

LIFTING VERTICAL :

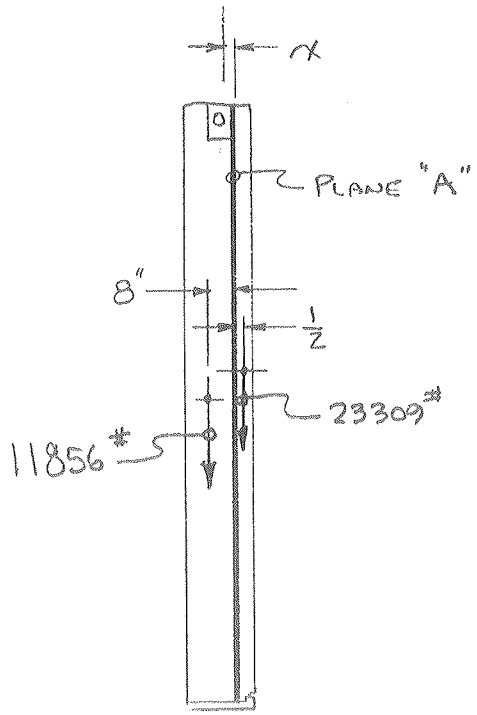

BALANCE POINT : FIND x

$$11856\,(8-x) = 23309\,(.5+x)$$

$$94848 - 11856\,x = 11654.5 + 23309\,x$$

$$83193.5 = 35165\,x$$

$$x = 2.3658''$$

8-27-98
PAGE 2
N. BOSEK

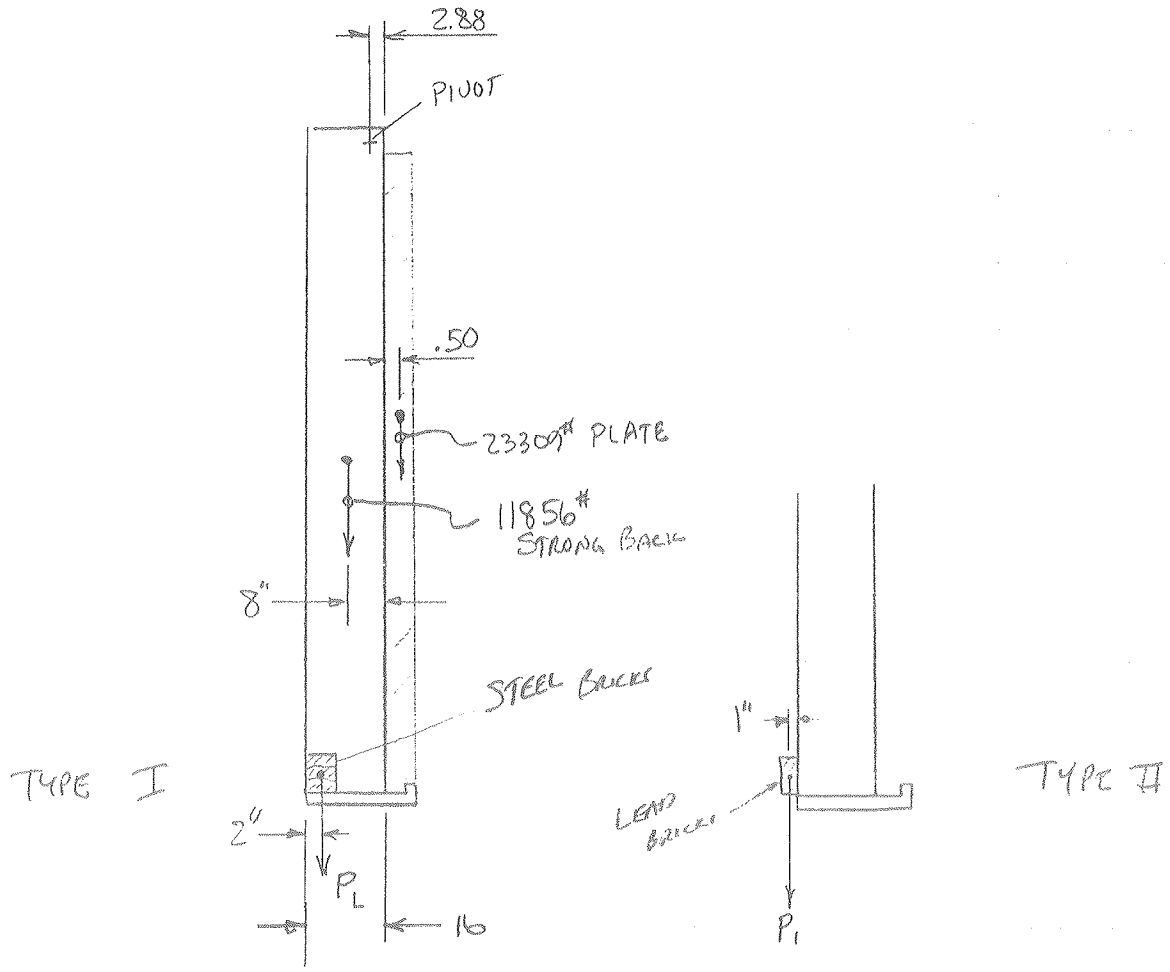

Σ MOMENT $_{PIVOT}$ = 0

36.3 lb.

$$11.12(P_L) + 5.12(11856) = 3.38(23309)$$

$$P_L = \frac{18081.7}{11.12} = 1626 \text{ lb.}$$

TYPE I

$$14.12(P_L) + \quad '' \quad = \quad ''$$

$$P_L = \frac{18081.7}{14.12} = 1280 \text{ lb.} = 49 \text{ LEAD BRICKS}$$

TYPE II