BELOW-THE-HOOK LIFTING DEVICE
Engineering Note Cover Page

Lifting Device Numbers:

FNAL Site No.:_____ if applicable Div. Specific No.: 89 if applicable Asset No. _____ if applicable

ASME B30.20 Group: (check one)
- ˇ Group I Structural and Mechanical Lifting Devices
- ˇ Group II Vacuum Lifting Devices
- ˇ Group III Magnets, Close Proximity Operated
- ˇ Group IV Magnets, Remote Operated

Device Name or Description: MINOS FAR DETECTOR STRONGBACK

Device was: (check all applicable)
- ˇ Purchased from a Commercial Lifting Device Manufacturer
  mfg. name: _____
- ˇ Designed and Built at Fermilab ~~LIVERMORE~~
- X Designed by Fermilab and Built by a Vendor
  Assy drawing number: _____
- ˇ Provided by a User or Other Laboratory
- ˇ Other. Describe: _____

Engineering Note Prepared by: T. LADRAN/R. BOSEK/J. KILMER Date: 8/13/99

Engineering Note Reviewed by: [signature] Date: 8/13/99

Lifting Device Data:

Capacity: 25,000 lbs

Fixture Weight: 11,500 lbs

Service: ˇ normal ˇ heavy ˇ severe (refer to B30.20 for definitions)

Duty Cycle: _____ 8, 16 or 24 hour rating (applicable to groups III, and IV)

Inspections Frequency: _____

Rated Load Test by FNAL (if applicable): Date: 8/26/99 Load: 31,250 lbs

ˇ Check if Load Test was by Vendor and attach the certificate. ACTUAL LOAD USED 32,000

Satisfactory Load Test Witnessed by: [signature] #6078 PD/ES&H

Signature (of Load Test Witness): _____

Notes or Special Information:

THIS IS A SECOND REVIEW TO RERATE THIS FIXTURE FROM 20,000 lbs TO 25,000 lbs. A NEW MECHANICAL ENGINEERING DOCUMENT AND REVIEW AND A NEW LOAD TEST ARE REQUIRED.

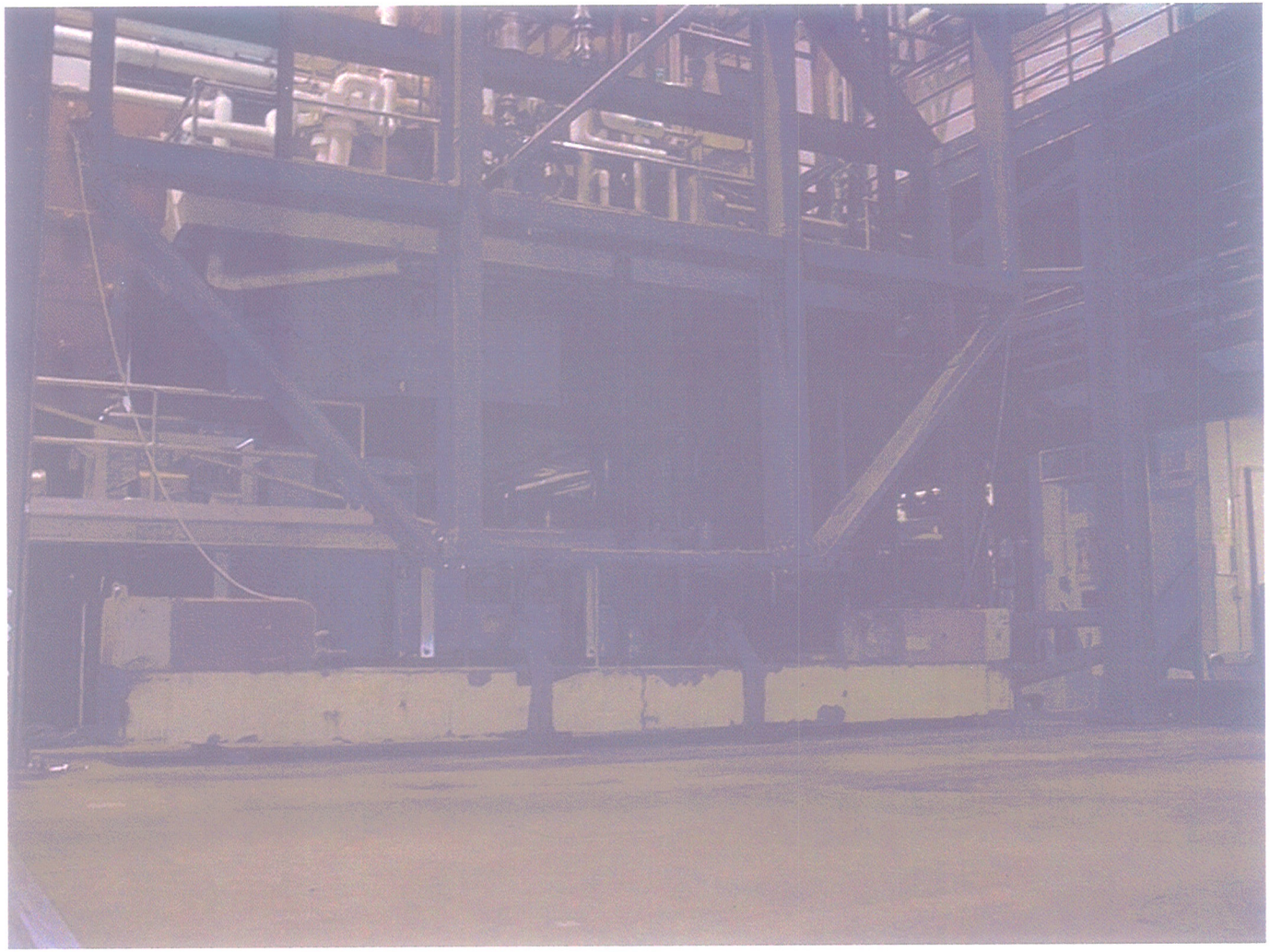

Image01.jpg

Image02.jpg

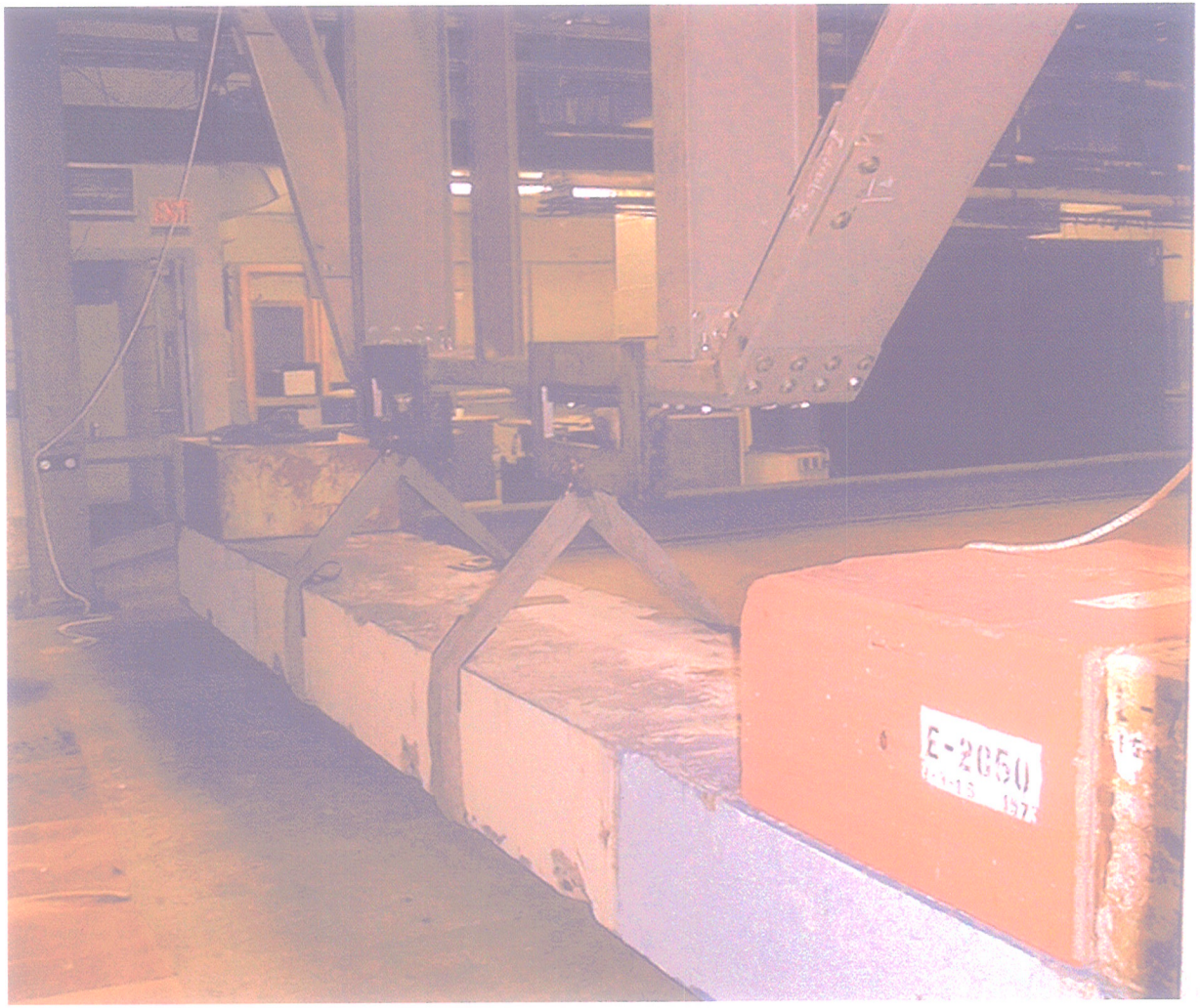

Image03.jpg

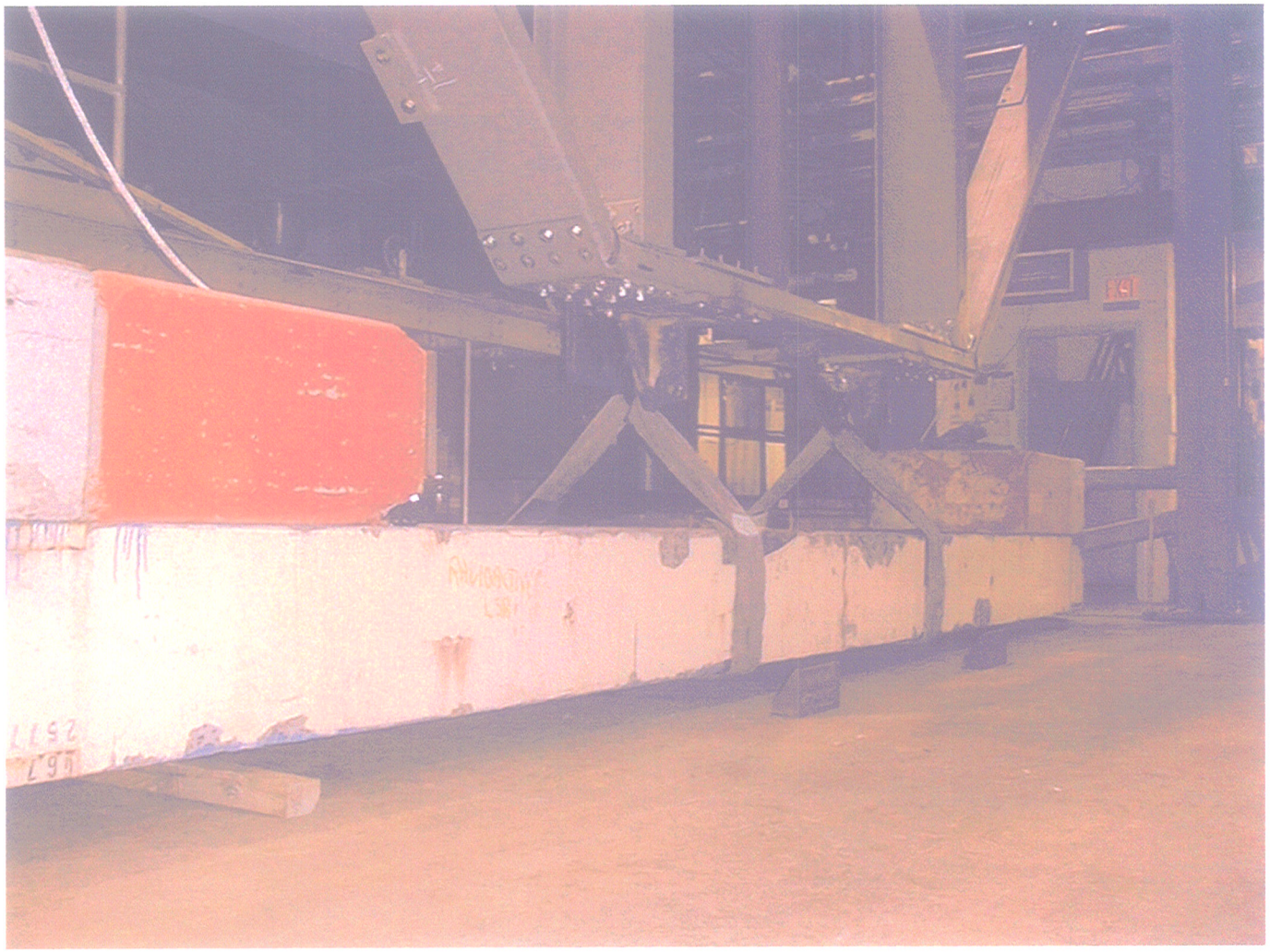

Image04.jpg

From: Robert J. Woods <rjwoods@cadwhs02.fnal.gov>
To: kilmer@fnal.gov <kilmer@fnal.gov>
Cc: plunk@fnal.gov <plunk@fnal.gov>; rjwoods@cadwhs02.fnal.gov <rjwoods@cadwhs02.fnal.gov>
Date: Friday, August 13, 1999 10:28 AM

Jim,

I have completed my review of the MINOS toroid strong back calculations for the revised plate load of 25,000 pounds. Everything looks good except for the connection between the 16X8 tubes and the W 16X40 main beams. As we have discussed,

the bolts are overstressed with the increased load on the strongback. Welding the top and bottom faces of the tubes to the top and bottom flanges of the W 16 beam with a min. 3/16" partial penetration grove weld will fix this problem and should be done before any load test is executed.

Bob

BELOW-THE-HOOK LIFTING DEVICE
Engineering Note Cover Page

Lifting Device Numbers:

FNAL Site No.:_____ if applicable Div. Specific No.: 89 if applicable Asset No. _____ if applicable

ASME B30.20 Group: (check one)
- ˇ Group I Structural and Mechanical Lifting Devices
- ˇ Group II Vacuum Lifting Devices
- ˇ Group III Magnets, Close Proximity Operated
- ˇ Group IV Magnets, Remote Operated

Device Name or Description: MINOS STRONGBACK

Device was: (check all applicable)
- ˇ Purchased from a Commercial Lifting Device Manufacturer
  mfg. name: _____
- ˇ Designed and Built at Fermilab
- ˇ Designed by Fermilab and Built by a Vendor
  Assy drawing number: _____
- ˇ Provided by a User or Other Laboratory
- ☒ Other. Describe: DESIGNED AT LLNL, FABRICATED AT SVF, ROCK FALLS, IL

Engineering Note Prepared by: TONY LADEAN LLNL Date: DEC, 1997

Engineering Note Reviewed by: James R. Kilcher Date: 3/30/97

Lifting Device Data:

Capacity: 20,000 lbs

Fixture Weight: 11,500 lbs

Service: ˇ normal ☒ heavy ˇ severe (refer to B30.20 for definitions)

Duty Cycle: _____ 8, 16 or 24 hour rating (applicable to groups III, and IV)

Inspections Frequency: CHECK BOLT TIGHTNESS WEEKLY

Rated Load Test by FNAL (if applicable): Date: _____ Load: 25,000 lbs

ˇ Check if Load Test was by Vendor and attach the certificate.

Satisfactory Load Test Witnessed by: _____

Signature (of Load Test Witness): [illegible] 4.6.98

Notes or Special Information:

Procedures for MINOS Strongback Load Test

Jim Kilmer

March, 26, 1998

1. Check that the strongback is properly assembled and bolts are tight. Inspect for proper bolts in correct locations. See next page for complete list of rigging equipment used in the test.
2. Use a basket sling rig to hook up blocks. Shackle slings to special connection plates. Shackles must have minimum load rating of 13,000 lbs, ie. have pins with a diameter greater than one inch. Two H blocks weighing a total of 24,100 lbs. and some hand stack comprise the load for the test.
3. Lift the bottom rail of the fixture up off the floor and place it on two Hilman rollers. The rollers allow the hook to be raised vertically without having to do a coordinated move of the bridge also.
4. Raise the strongback to the vertical hanging position. The strongback will be attached to the crane with the 22 ton load rated spreader bar and shackles rated for a minimum of 12 tons. The crane will also have a scale on the hook for monitoring the lift. Note that the strongback does not hang on the hook plumb with the vertical. The large lifting swivel eyes are offset from the CG axis purposely to support a load and with the strongback empty it leans in the direction that makes the working surface face slightly "up".

   The load rating was chosen as follows:
   Weight of the test plane is 18,500 lbs. The weight of scintillator detectors for a plane are 1500 lbs.
   The total load rating is then 20,000 and the test load is 1.25 times that or 25,000 lbs.

4. After the strongback is vertical hook the two special connection plates to the bottom shelf clips of the strongback.
5. Take up the slack on the slings.
6. Check the rigging of the system to be sure it is sound. Be cautious about the angle of the strongback. It should be at such an angle that the load connection is directly over the center of the block so the strongback will be at a small angle.
7. Carefully lift the blocks off the cribbing by two inches. Allow it to hang on the strongback for 15 minutes. It is to be expected that as the load is taken up the strongback will tilt because the load is not directly under the swivel eye axis at the start of the pick.
8. After the time is up set the load back on the cribbing so it is stable.
9. Move the strongback to it's original floor position and carefully lower it to the floor. Use the Hilman rollers again to lower the strongback to the floor.

Rigging List for Strongback load test.
Listed in order from crane hook down to the load.

One D-ring 2 ¼ X 8 X 16 , weight = 55 lbs, (124,700 lbs rated)
One spreader bar, weight = 1600 lbs, (22 ton rating)
2 each - 1 ½ inch pin shackles, (rated at 17 tons)
2 each - hoist ring 1 ½ inch
Strongback weighs 11,500 lbs.
2 each - lifting plates with 1 ½ inch holes
2 each - 1 ¼ inch pin shackles, (rated at 12 tons)
2 each - grey slings (B63,400)
test load weighs 25,000 lbs

CONNECTION PLATE FOR STRONGBACK LOAD TEST.

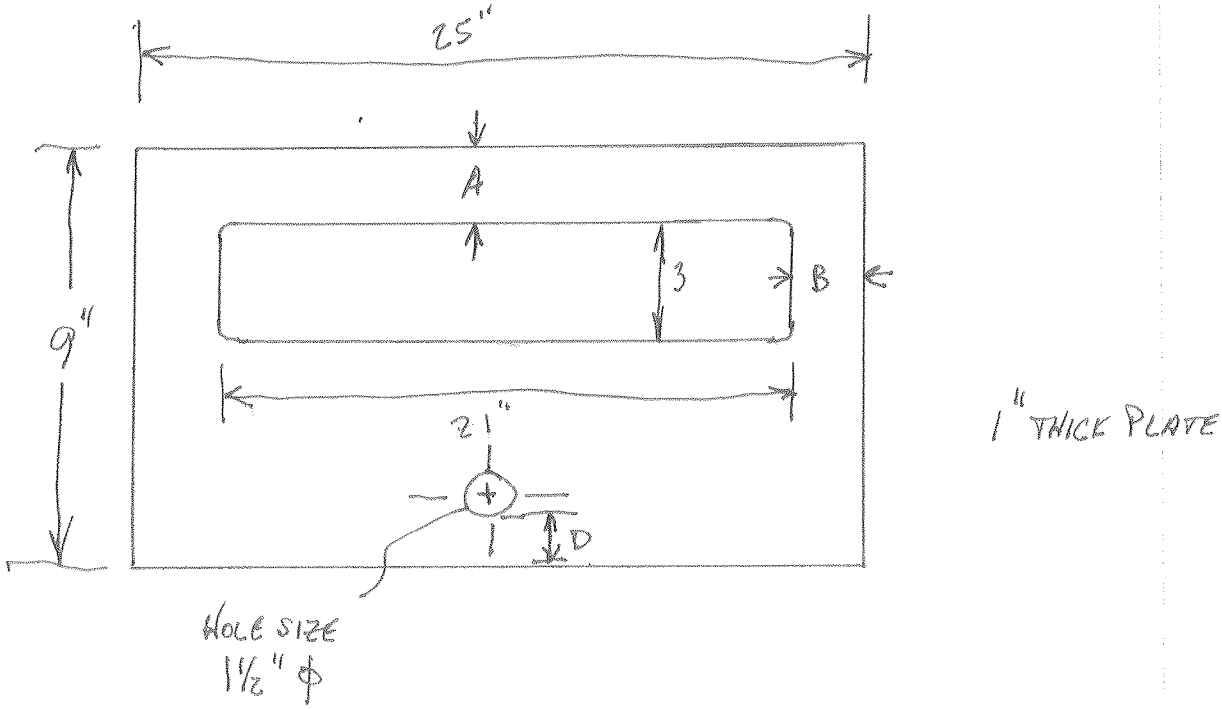

LOAD FOR EACH PLATE IS $\frac{25{,}000\,lb}{2} = \underline{12{,}500\,lbs}$

PER ANSI B 30.20 STRESS LIMIT MUST BE $\leq$ 1/3 OF YIELD

PICK STOCK PLATE WHICH IS ~ 1018 HOT ROLLED

$$\text{STRESS LIMIT} = \frac{30\,KSI}{3} = 10{,}000\,PSI$$

USE 1" THICK PLATE

1. CALCULATE "A" DIMENSION TO MATCH BLOCK SHEAR LOAD

$$\sigma = 10\,KSI = \frac{12{,}500\,lbs}{(1")(A)}$$

$$A = 1.25" \Rightarrow \text{USE } 2"$$

2. CALCULATE "B" DIMENSION TO MATCH TENSILE STRESS IN THE SECTION

$$\sigma = 10\,KSI = \frac{6250\,lb}{(1")(B}$$

$$B = .625" \Rightarrow \text{USE } 2"$$

LOOD AT "D" DIMENSION FOR BLOCK SHEAR ON PIN

$$\sigma = 10\,KSI = \frac{12{,}500\,lb}{2 \times 1'' \times D}$$

$D = .625''$

Reviewed
by
ANDREW SZYMULANSKI (5935)
MARCH 30, 98

REV.	DESCRIPTION	DRAWN	DATE
		APPROVED	DATE

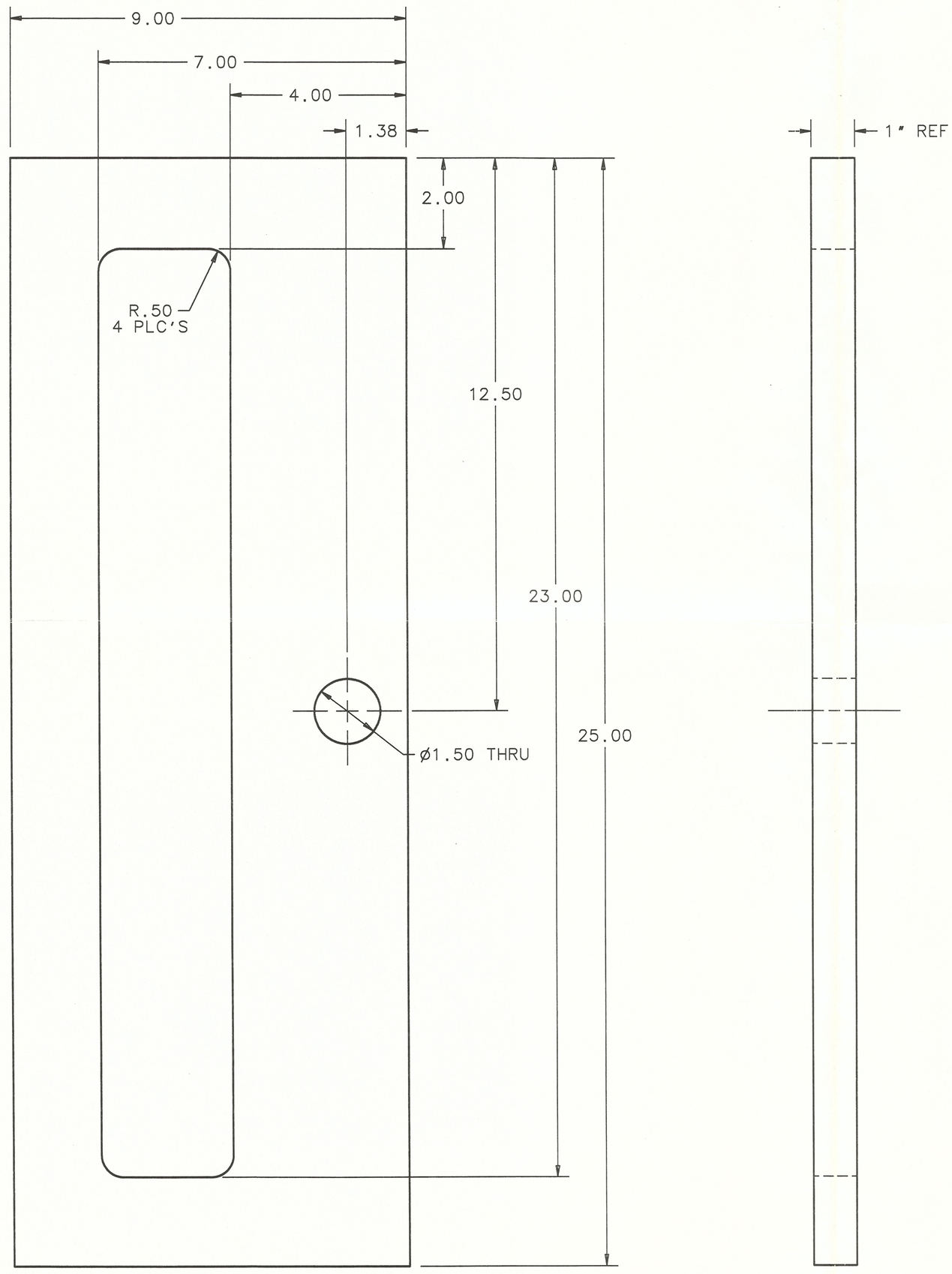

ITEM NO.	PART NO.	DESCRIPTION OR SIZE	QTY. REQ.

PARTS LIST

UNLESS OTHERWISE SPECIFIED			ORIGINATOR	JIM KILMER	3/98
.XX	.XXX	ANGLES	DRAWN	TINA KUBICKA	3/23/98
±.06	± ——	± ——	CHECKED		3-23-98
			APPROVED	James E. Kilmer	3/23/98

1. BREAK ALL SHARP EDGES .015 MAX.
2. DO NOT SCALE DRWG.
3. DIMENSIONING IN ACCORD WITH ANSI Y14.5M-1982 STD'S.
4. ALL DIMENSIONS ARE IN INCHES.

250 MAX. ALL MACHINED SURFACES

USED ON

MATERIAL

1" THK 1018 H.R.S. PLATE

FERMI NATIONAL ACCELERATOR LABORATORY
UNITED STATES DEPARTMENT OF ENERGY

PPD/MECHANICAL SUPPORT MINOS LIFTING FIXTURE

SCALE	DRAWING NUMBER	SHEET NO.	REV.
1/2	0123.300-MC-350987	1 OF 1	

MAR 1998
REFERENCE ONLY
Not For Fabrication

From: Keith Schuh (4/1/98)
To: John Cooper, TJ Sarlina
¬: Bruce Blller, Martha Heflin, Jim Kilmer, Tom Nicol, Mark Reichanadter

Inter-Office Memo

Minos Review

The PPD/MINOS Safety Review Committee has reviewed the work plan and mechanical drawings associated with the request to load test the strong back lifting fixture. The mechanical review committee has been out to the job site with Jim Kilmer to review the plan and equipment. The committee had several questions that concerned us about the test. All of our reservations have been satisfied. I recommend that the MINOS Lifting Fixture Load Test partial ORC be approved for testing up to 25,000 lb.

==========

From: Jim Kilmer (3/30/98)
To: KEITH SCHUH
¬: jim kilmer
ail*Link® SMTP Spreader Bar for Strongback test.
Received: by qmgate.fnal.gov with ADMIN;30 Mar 1998 15:49:01 -0600
Received: from qmgate.fnal.gov ("port 1618"@qmgate.fnal.gov)
by FNAL.FNAL.GOV (PMDF V5.0-8 #3998) id <01IVA6XSFQWQ001NYH@FNAL.FNAL.GOV>;
Mon, 30 Mar 1998 15:48:57 -0600
Date: Mon, 30 Mar 1998 15:45:31 -0600
From: Jim Kilmer <jim_kilmer@qmgate.fnal.gov>
Subject: Spreader Bar for Strongback test.
To: KEITH SCHUH <SCHUH@FNAL.GOV>
Cc: jim kilmer <kilmer@FNAL.GOV>
Message-id: <n1320849559.64627@qmgate.fnal.gov>
MIME-version: 1.0
X-Mailer: Mail*Link SMTP-QM 4.1.0
Content-type: text/plain; charset="ISO-8859-1"; Name="Message Body"
Content-transfer-encoding: quoted-printable

Keith as you requested here's a written statement on the spreader bar. It turns out that this spreader bar is used regularly in the PPD for lifts. It is rated for 22 tons and an engineering note exists on the 11th floor for it. It was last used about two weeks ago. It was last at CDF or was used in the Meson Detector Building but I don't know which. It is one of our standard multipurpose bars. Jim

==========

From: Keith Schuh (3/30/98)
To: Jim Kilmer
CC: Bruce Bller, John Cooper, Tom Nicol, Mark Reichanadter, TJ Sarlina,
Keith Schuh
Mail*Link® SMTP FWD>Permission to lift strongback?

Jim,

I have gotten replies from Mark and Tom and we all agree that lifting the strong back with no load is OK. You should have received a copy of Tom's E-mail requesting to know when you are going to do this. I would like to be there too.

The committee also agrees that your plan for load testing the strong back follows safe design practices and procedures. The committee does not offer formal opinions on the functionality of the design. Nor does it routinely check for arithmetic errors. Before signing off the review document I would like to know where did the spreader bar come from and have you taken a good look at the welds. I just want to be sure that it has not been sitting around for years and that you have inspected it.

When I get your answer I would suggest that you put all E-mail correspondence about this load test into the engineering note folder along with the formal sign off sheet. Enclosed is a partial ORC that is of the type used by CDF. I believe this is the format that the PPD wants to follow.

Date: 3/30/98 9:27 AM
From: Jim Kilmer
Received: by qmgate.fnal.gov with ADMIN;30 Mar 1998 09:22:14 -0600
Received: from qmgate.fnal.gov ("port 1329"@qmgate.fnal.gov)
by FNAL.FNAL.GOV (PMDF V5.0-8 #3998) id <01IV9TF8IPMS001I0R@FNAL.FNAL.GOV> for
SCHUH@FNAL.FNAL.GOV; Mon, 30 Mar 1998 09:22:12 -0600
Date: Mon, 30 Mar 1998 09:16:09 -0600
From: Jim Kilmer <jim_kilmer@qmgate.fnal.gov>
Subject: Permission to lift strongback?
To: KEITH SCHUH <SCHUH@FNAL.GOV>
Message-id: <n1320872765.70266@qmgate.fnal.gov>
MIME-version: 1.0
X-Mailer: Mail*Link SMTP-QM 4.1.0
Content-type: text/plain; charset="ISO-8859-1"; Name="Message Body"
Content-transfer-encoding: quoted-printable

Keith as we discussed here's a written request to you for permission to lift the strongback WITHOUT ANY LOAD. What we would be looking to do is measure the angle that the strongback hangs at with no load on it and to practice getting it vertical. It is known that the strongback pick point is set for balancing with the load on it. When there is no load the strongback will hang slightly "face up". I would like to measure this angle. Jim

Also I will be delivering the final documents for the load test this morning. There are actually two parts. A large notebook which will stay here on the 11th floor contains a copy of all of the chapter 5 stuff from the notebooks I gave you for the entire job. It will be the official engineering note for the fixture. I'll keep it and when it is ready one of you can sign off on it. All of you already have a copy of all of that stuff already.

The new section I will deliver today is about five pages including the procedure for doing the test, calculations you don't have on special plates needed to connect the load to the strongback at the proper place, a copy of the engineering note cover sheet and a print of these connection plates.

==========

From: tnicol@fnal.gov (3/30/98)
To: Keith Schuh
?: Jim Kilmer, Mark Reichanadter, Myself
Mail*Link® SMTP RE>FWD>Permission to lift strongback?
Received: by qmgate.fnal.gov with ADMIN;30 Mar 1998 11:35:04 -0600
Received: from fnal.gov (mtfpc01.fnal.gov) by fnts37.fnal.gov (4.1/SMI-4.1)
id AA15384; Mon, 30 Mar 98 11:37:21 CST
Message-Id: <351FD86F.4EC6FCD2@fnal.gov>
Date: Mon, 30 Mar 1998 11:37:51 -0600
From: "Thomas H. Nicol" <tnicol@fnal.gov>
Reply-To: tnicol@fnal.gov
Organization: Fermilab - Technical Division / Engineering and Fabrication
X-Mailer: Mozilla 4.04 [en] (Win95; I)
Mime-Version: 1.0
To: Keith Schuh <keith_schuh@qmgate.fnal.gov>
Cc: Mark Reichanadter <Reich@FNAL.GOV>,
Jim Kilmer <jim_kilmer@qmgate.fnal.gov>,
Myself <tnicol@fnts37.fnal.gov>
Subject: Re: FWD>Permission to lift strongback?
References: <n1320869150.85397@qmgate.fnal.gov>
Content-Type: text/plain; charset=us-ascii
Content-Transfer-Encoding: 7bit

Keith...

I don't have any objection to lifting the fixture by itself. I think
the
committee should be there just for our own education if nothing else.
For the final test, I think the engineering note should be signed off,
including the "Reviewed by" section.

Tom...

==========

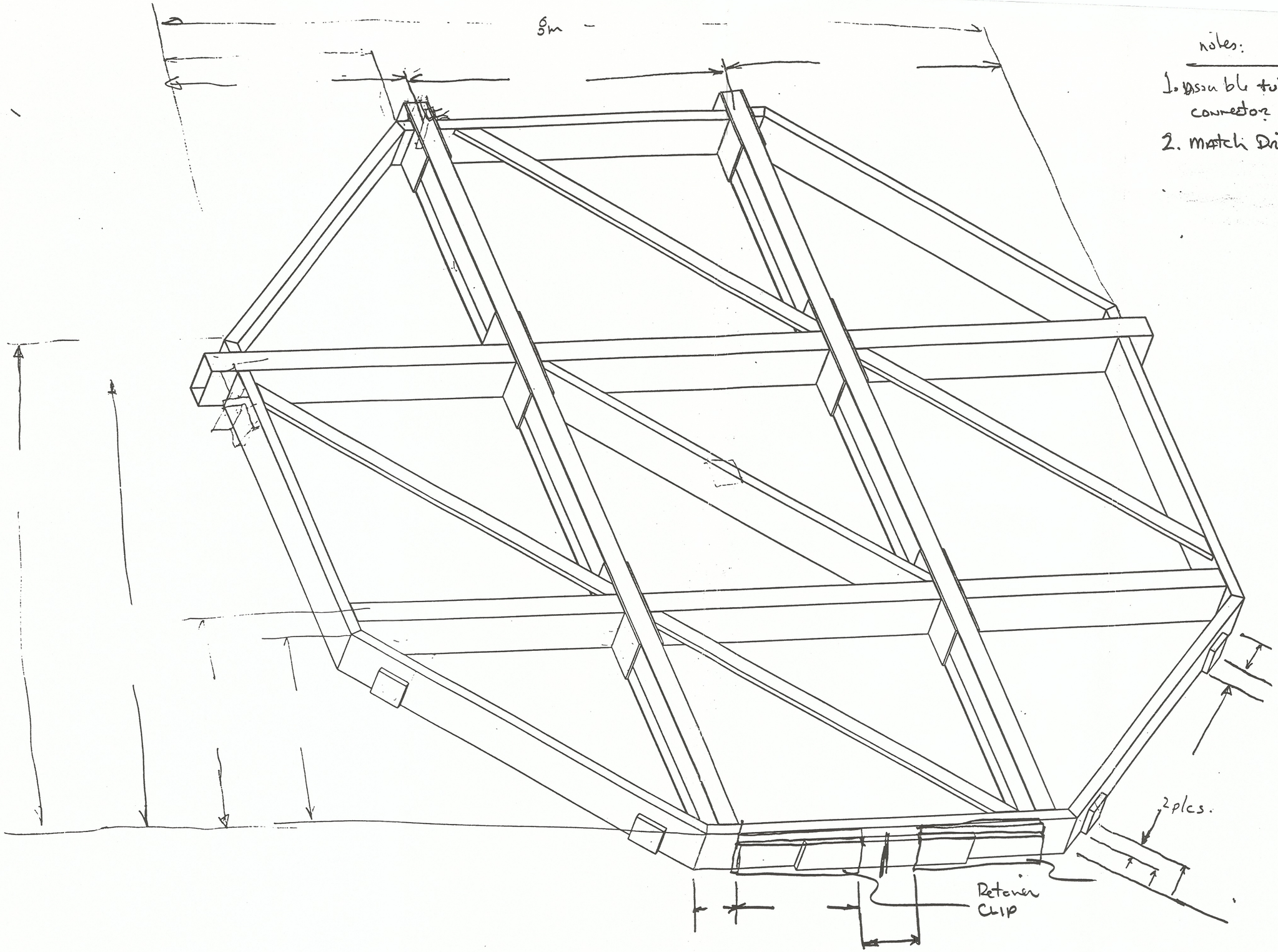

notes:

1. Assemble tube and Brackets using connector Brackets
2. match Drill

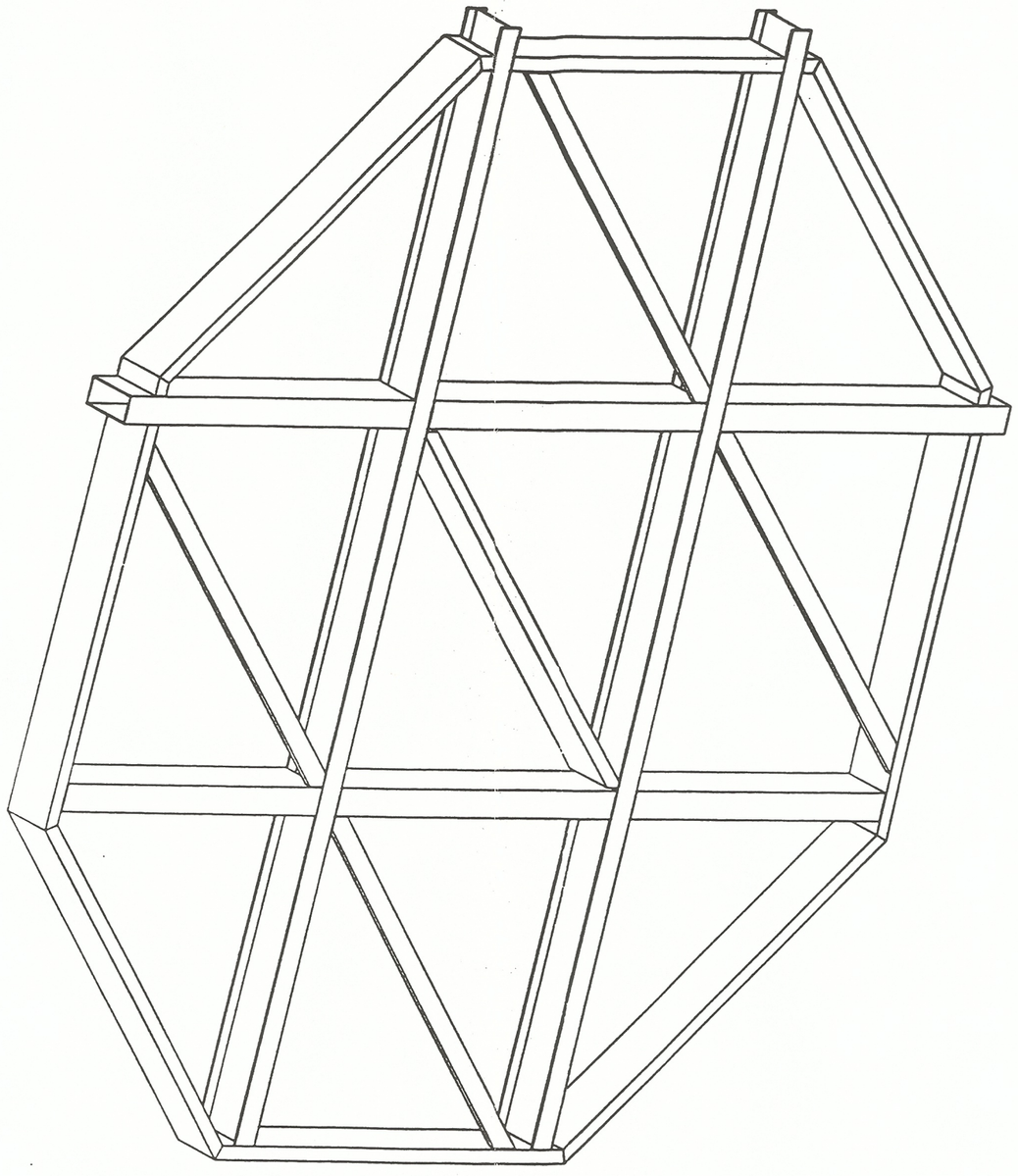

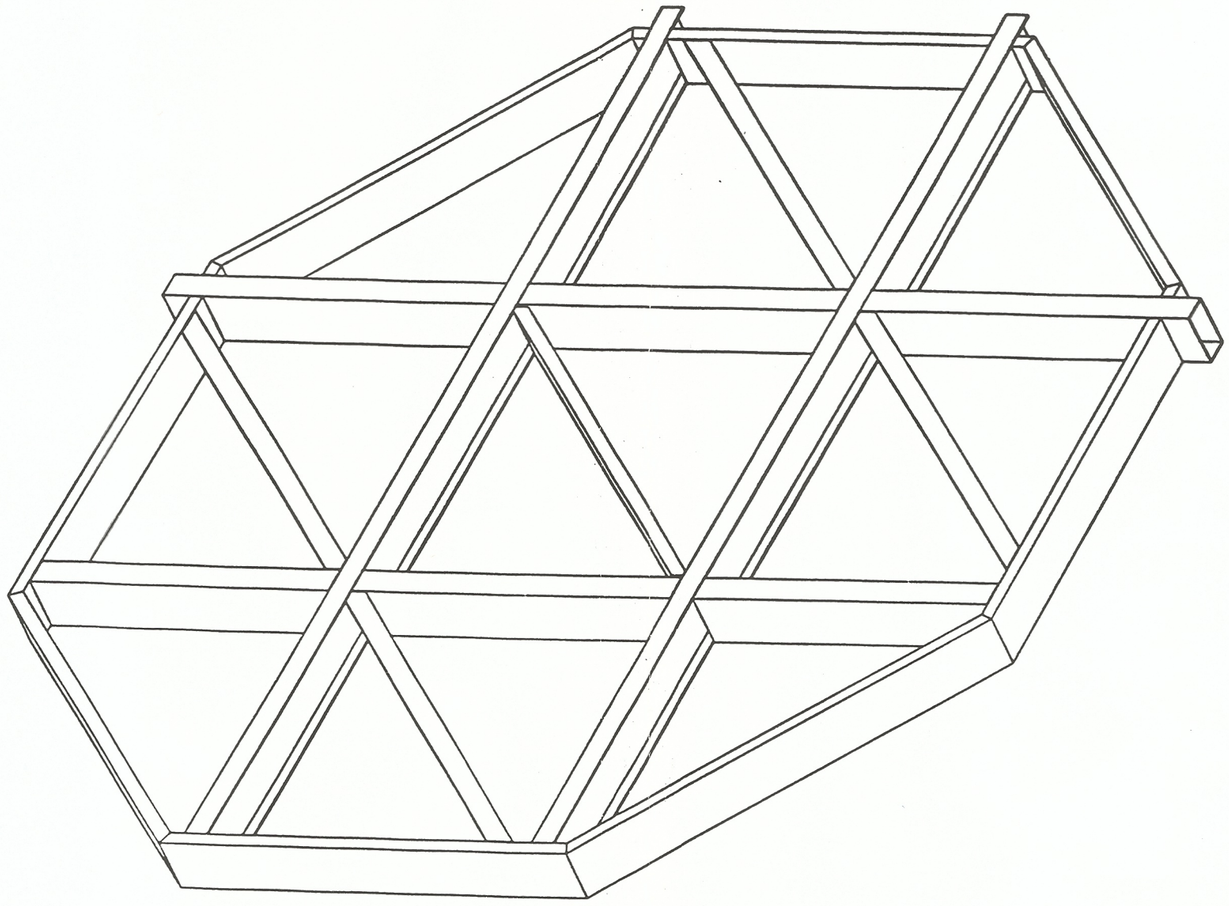

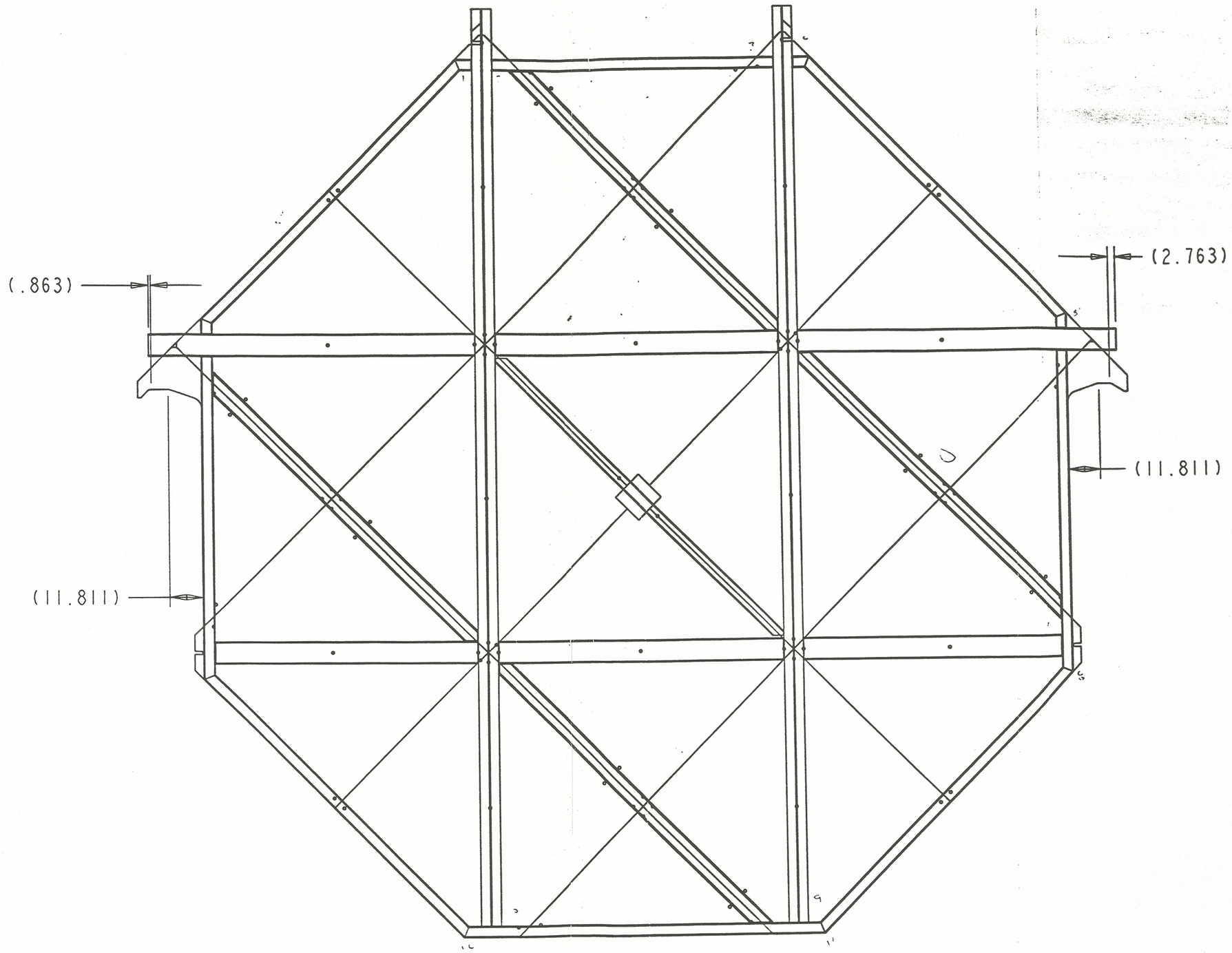
(.863)
(2.763)
(11.811)
(11.811)

42-182 100 SHEETS
National Brand

Beam Flexure - LIGHT I-BEAMS W10x15

$l = 26.5\,ft\ (315\,in)$

$W_1 a = 18{,}000\,lbs./315\,in. = 56.6\,lbs/in.$

$W_2 a = 36{,}000\,lbs/315\,in \approx 114\,lbs/in.$

$Wa/3 = 19\ lbs/in$

$E = 29 \times 10^6$

$Wa/2 = 56.6\,lbs/in.$

I_{xx} W10x15 $= 63$

$I_{yy} = 1.1$

Calculate Deflection of Strongback in Horz.

1st Approx. $L/d = 30$ $\quad L = 26.2\,ft$ (Smallest)

$d = ?$

$d = \frac{L}{30} = \frac{26.2}{30} = 0.9\,ft.$

beam

minimum size ≈ 10 beam

choose 12" - 15" depend on deflection

Assume 0.1 in Deflection @ 36,000 lbs f.

$y = \frac{-5\,wa\,l^4}{384\,EI}$ (Roark table 3 2e.)

neg deflection

$I = \frac{(-)5\,wa\,l^4}{384\,E(y)} = \frac{(-1)(-5)(56.6\,lbs/in)(315\,in)^4}{384(30\times10^6)(0.1)} = 2420\ in^4$

@ 0.1in $\boxed{\text{for } 18{,}000\,lbs\,f.\ I = 1420\ in^4}$

$\boxed{\text{@ } 0.25\,in \text{ for } 18{,}000\,lbs\,f\ I = 568\,in^4}$

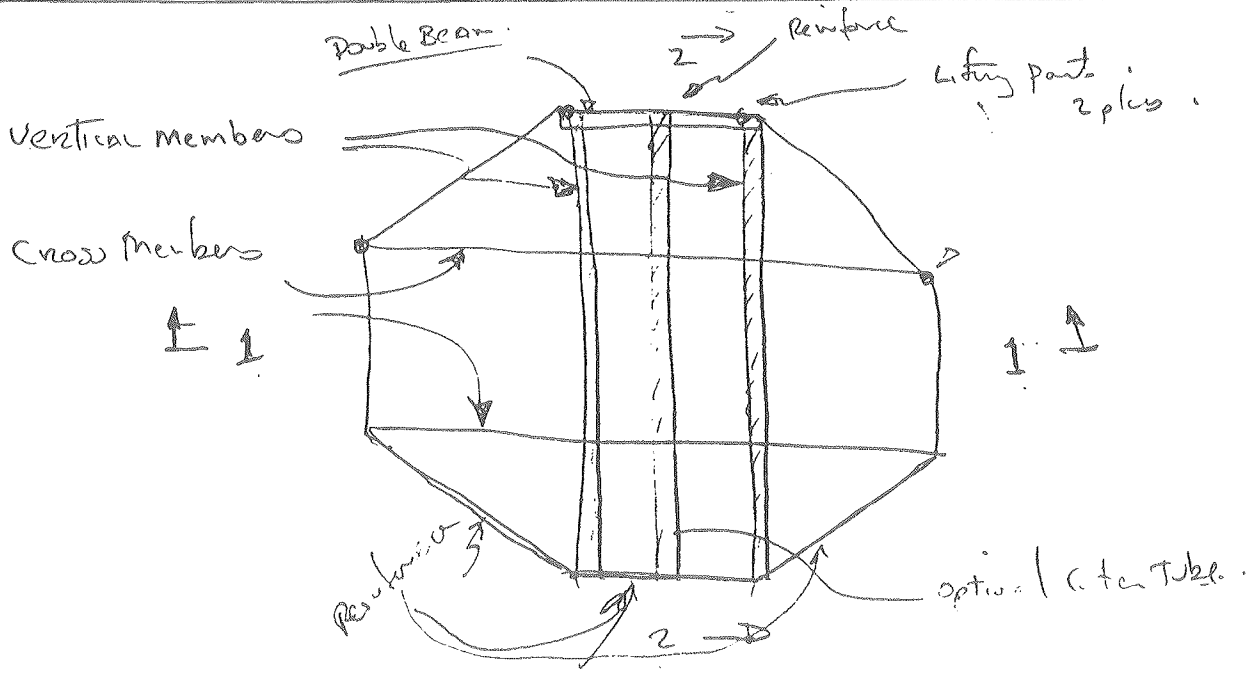

8 sided Frame

note: weld Gusset for torsion.

$E_{STL} = 30 \times 10^6$

VERTICAL	Cross	Frame	
53 ft (16 m)	53 ft (16 m)	87 ft (26.5 m)	LOAD
$I_{xx} = 2420$ in^4	1420 in^4	400	36,000 lbs (157 kN) 0.1 in Defl.
$I_{yy} = 242$ in^4 10^6	280 in^4 20%	200	
I_{xx}: 1420 in^4	700 in^4	200 in^4	Level. 18,000 lbs f. (90 kN) * added wt.
I_{yy} 120 in^4	140 in^4	100 in^4	0.1 in Defl.
I_{xx} 599 in^4	290 in^4	80 in^4	18,000 lbs f. 90 kN 0.25 in Defl.
$I_{yy} = 48$ in^4	112 in^4	32 in^2	

Beam Wts -

Plate Load	36 kips	18 kips	18 kips
Deflection	0.1 in	0.1 in	0.25 in
Vertical -	W18 x 130	W16 x 89.	W16 x 45.
Cross -	W18 x 86 or 15 x 6 tube (0.5 wall) 76 lb/ft	W16 x 77. or 16 x 8 tube 0.375 wall 55 lb/ft.	W16 x 67 or 16 x 8 tube. 0.3125 wall 49 lb/ft.
Frame -	18 x 6 TUBE 0.375 wall 58 lb/ft.	16 x 8 tube. 0.3125 wall 45.66 lbs/ft.	16 x 4 tube 0.3125. 35.1 lb/ft
Total Mass.	6890 4553 5046 15,494 lbs 7.75 tons	4717 4051 4263 13,061 6.53 tons.	2355 3551 3054 8,990 4.5 tons.

w/o optional Center Tube.

Selected Beams for STRONGBACK BASED ON Ixx : Iyy AND WEIGHT.

16" BEAMS HAVE BEAM Ixx to WT. Ratio.

ALSO CONSIDER the Iyy Properties are acceptable.

Assume the Horizontal Triangular 0.375 is OK. Based on Cross calculation welds. Also will not [illegible] diagonal Plates.

[illegible] approx [illegible] 2in weld [illegible] 1in weld and total [illegible] Deflection of 0.25 in.

- Vertical loads on beams are not substantial.

1st Design Approx.

	Vert	Cross	Frame
Size	W16x45	16x8 tube 0.3125 w	16x4 tube 0.3125
WT	45 lbs/ft	49 lbs/ft	35 lbs/ft.
Ixx.	586	451	337
Iyy	33	165	35

Flatness Specs. for 0.375 in Steel. from (MEL97-002-0A)

0.157" over FULL length

0.075" over 1m x 1m

Strongback Flatness should be within 1/4 of Tolerance.

0.040" over Full length.

0.020 over 1m x 1m

Spec for Steel Tolerance Numi Note - L-161

Zero Pitch:

- Flatness: 0.84 cm x 2 (0.330 in x 2)

Deflection Bowing (from load) 0.05 cm

Total (from Table 2) 2.51 cm Strongback Zero in Gap

LOAD CAPACITY.

from Mavens Calculations: Force to Flatten 1 Newton/meter. 0 Grams/Plate.

F = 4800 lbsf

carbon Steel tubing ASTM A 500(B) S_y = 46,000 ksi

I-Beam:
Structural Steel tolerances - Rigorous:

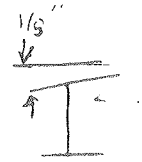

Combined Stress - S-Shape

$\frac{1}{8}$

$\frac{1}{32}$ 10/16

RECTANGULAR STRUCTURAL TUBING — CARBON STEEL

Outside Dimension in Inches	Average Wall Ga.	Average Wall Dec.	Weight per Ft. in Lbs.	ASTM A500 (B)	ASTM A513	HR Butt Welded
1½ x 1½ x	16	.065	.827		X	
1½ x 1 x	14	.083	1.32		X	
	11	.120	1.84		X	
2 x 1 x	.072	.072	1.38	X		
	14	.083	1.60		X	
	11	.120	2.25	X		
2 x 1¼ x	14	.083	1.74		X	
2 x 1½ x	11	.120	2.66		X	
	⅛	.125	2.76	X		
2½ x 1 x	14	.083	1.88		X	
2½ x 1¼ x	14	.083	2.02		X	
2½ x 1½ x	14	.083	2.26		X	
	⅛	.125	3.12	X		
	.145	.145	3.51			X
	3/16	.188	4.43	X		
	¼	.250	5.59			X
3 x 1 x	14	.083	2.16		X	
3 x 1½ x	14	.083	2.45		X	
	11	.120	3.63	X		
	⅛	.125	3.45	X		
	3/16	.188	5.07	X		
3 x 2 x	14	.083	2.73		X	
	11	.120	3.76	X		
	⅛	.125	3.88	X		
	7	.180	5.40	X		
	3/16	.188	5.59	X		
	¼	.250	7.10	X		
4 x 2 x	14	.083	3.29		X	
	11	.120	4.58	X		
	⅛	.125	4.70	X		
	7	.180	6.62	X		
	3/16	.188	6.86	X		
	¼	.250	8.80	X		
4 x 2½ x	11	.120	5.11		X	
4 x 3 x	11	.120	5.52		X	
	⅛	.125	5.68	X		
	7	.180	7.86	X		
	3/16	.188	8.14	X		
	¼	.250	10.50	X		
5 x 2 x	7	.180	7.84	X		
	3/16	.188	8.14	X		
	¼	.250	10.50	X		
5 x 2½ x	11	.120	5.92		X	
	7	.180	8.74		X	
	3/16	.188	8.88	X		
5 x 3 x	7	.180	9.07	X		
	3/16	.188	9.31	X		
	¼	.250	12.02	X		
	5/16	.313	14.52	X		
	⅜	.375	16.84	X		
	½	.500	20.88	X		

(Continued)

RECTANGULAR STRUCTURAL TUBING — CARBON STEEL

Outside Dimension in Inches	Average Wall Ga.	Average Wall Dec.	Weight per Ft. in Lbs.	ASTM A500 (B)	ASTM A513	HR Butt Welded
(Continued)						
6 x 2 x	3/16	.188	9.31	X		
	¼	.250	12.02	X		
6 x 3 x	7	.180	10.20	X		
	3/16	.188	10.58	X		
	¼	.250	13.72	X		
6 x 3 x	5/16	.313	16.65	X		
	⅜	.375	19.39	X		
	½	.500	24.28	X		
6 x 4 x	3/16	.188	11.86	X		
	¼	.250	15.42	X		
	5/16	.313	18.77	X		
	⅜	.375	21.94	X		
	½	.500	27.68	X		
7 x 5 x	¼	.250	18.82	X		
	⅜	.375	27.04	X		
	½	.500	34.48	X		
8 x 2 x	3/16	.188	11.86	X		
8 x 3 x	3/16	.188	13.13	X		
	¼	.250	17.12	X		
	⅜	.375	24.49	X		
8 x 4 x	¼	.250	18.82	X		
	5/16	.313	23.02	X		
	⅜	.375	27.04	X		
	½	.500	34.48	X		
8 x 6 x	3/16	.188	16.85	X		
	¼	.250	22.04	X		
	5/16	.313	26.99	X		
	⅜	.375	31.73	X		
	½	.500	40.55	X		
10 x 2 x	3/16	.188	14.41	X		
10 x 3 x	¼	.250	20.34	X		
10 x 4 x	3/16	.188	16.85	X		
	¼	.250	22.04	X		
10 x 5 x	¼	.250	23.74	X		
10 x 6 x	¼	.250	25.44	X		
	5/16	.313	31.24	X		
	⅜	.375	36.83	X		
	½	.500	47.35	X		
10 x 8 x	¼	.250	28.83	X		
	⅜	.375	41.93	X		
	½	.500	54.15	X		
12 x 2 x	3/16	.188	16.85	X		
12 x 4 x	¼	.250	25.44	X		
	⅜	.375	36.83	X		
12 x 6 x	¼	.250	28.83	X		
	⅜	.375	41.93	X		
	½	.500	54.15	X		

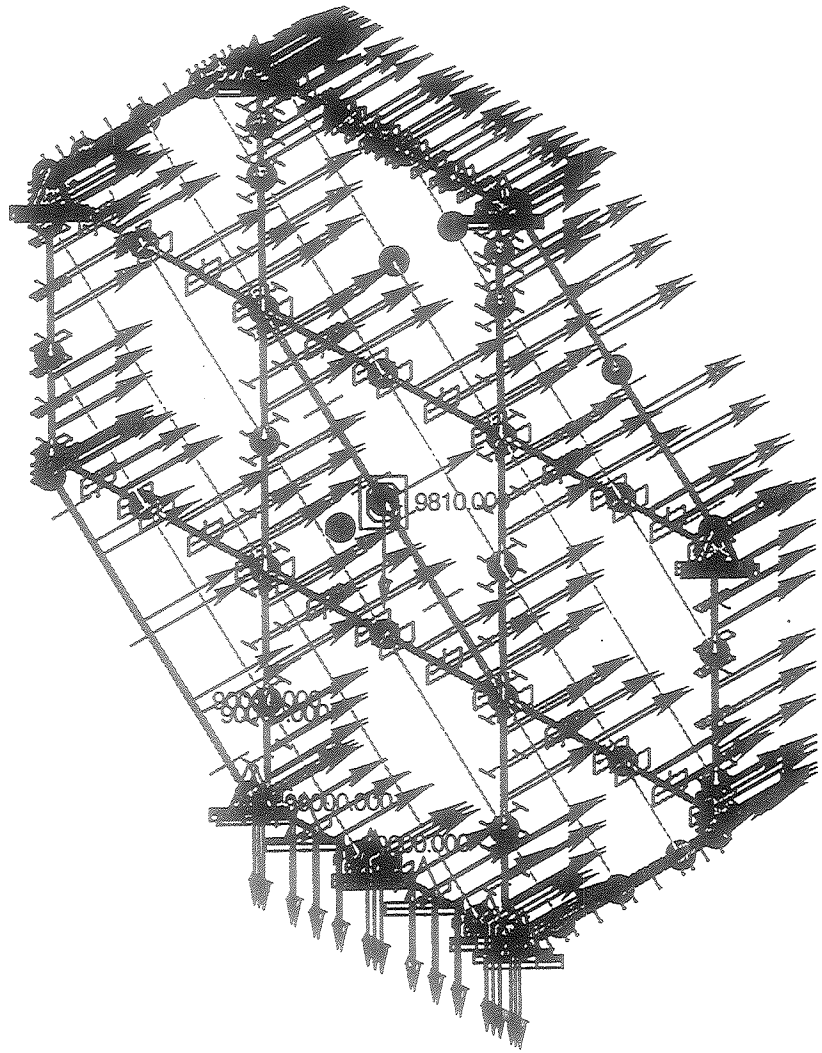

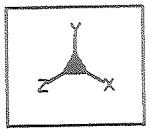

PARAMETRICA
Release 1.8

MENOS Room Strongback - 5.95 metric ton

10.4tube frame 10x8 cols. W16x31 beam
file: sm0K16.rev.A - 1 - Load: 1 LINE

PARAMETRIC
TECHNOLOGY
CORPORATION

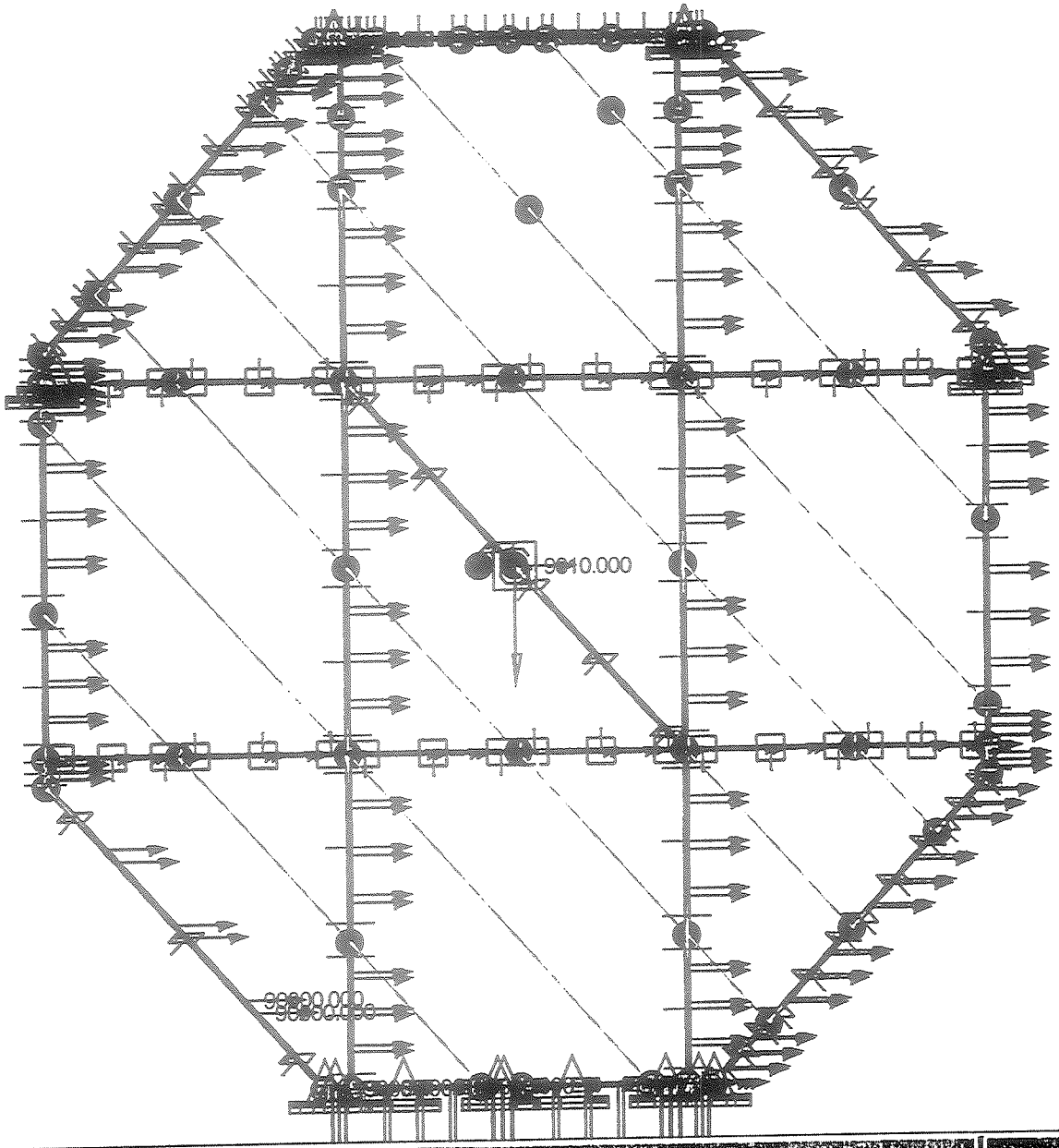

Proj: MECHANICA
Run: test 08

09/17/97 - 13:53:3

VINOS 116 in Strongback - 3.95 metricton

116x4tube frame 16x8cross, W16x50HEBeam

file: strngbk16.res A - P. Laden - LLNL

PARAMETRIC
TECHNOLOGY
CORPORATION

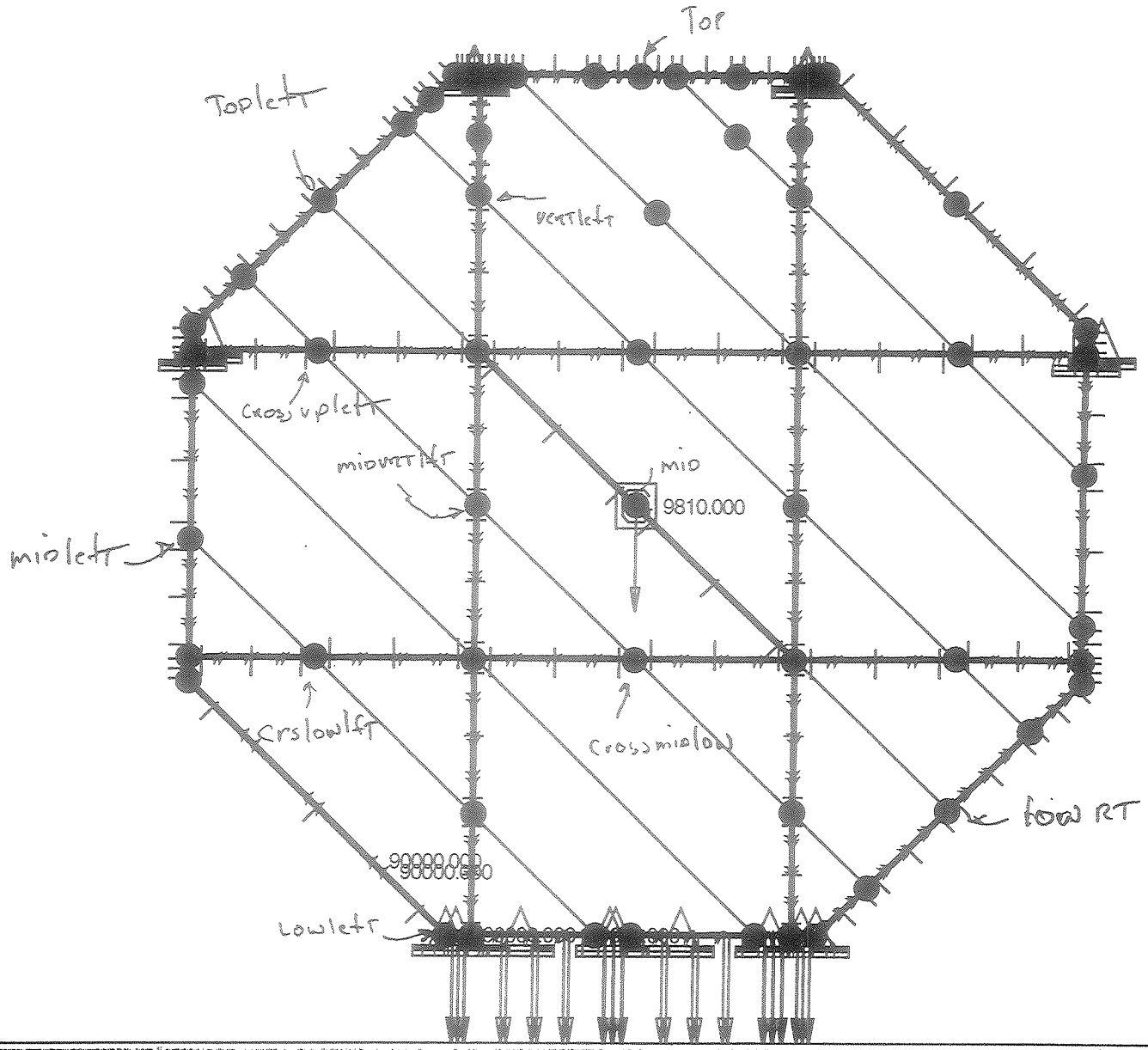

Pro/MECHANICA
Release 18
07/31/97 12:15

MINOS Strongback - 16 in.
16x4 tube frame, 16x8 cross, W16x40 I-beam
1 Radian, 1 LNH

PARAMETRIC
TECHNOLOGY
CORPORATION

Displacement Mag
Max +2.9368E+00
Min +0.0000E+00
Deformed Original Model
Scale 2.6838E+02
Load: Combination

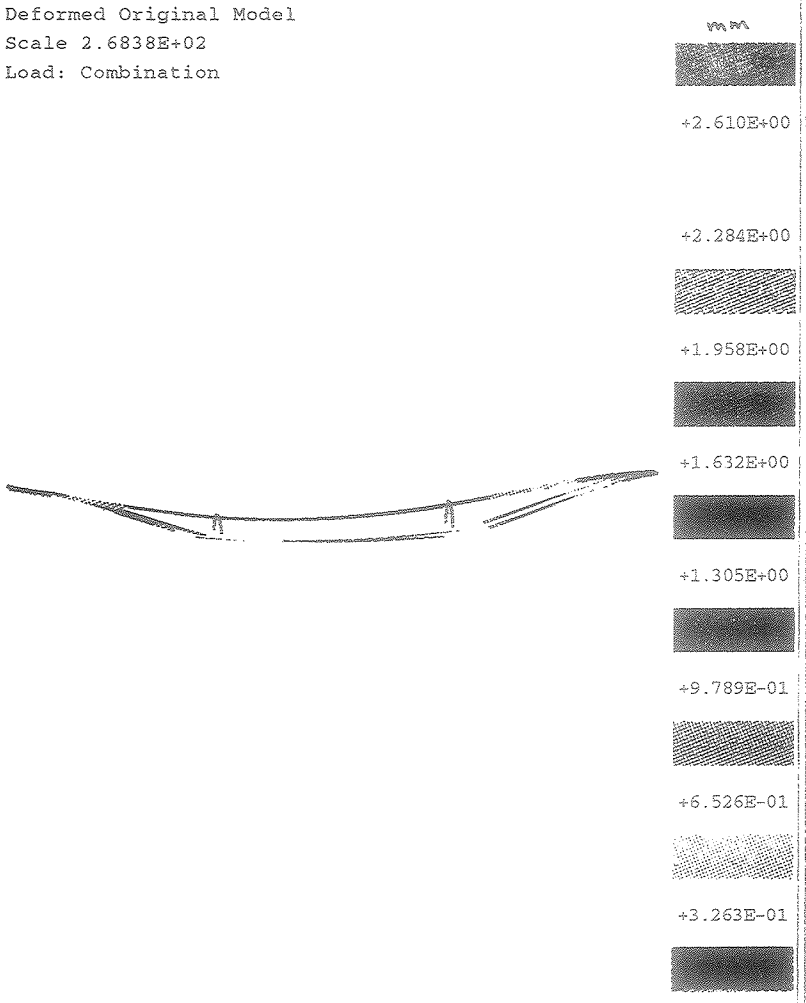

Maximum Total Beam Stress
Max +3.3514E+01
Min +0.0000E+00
Deformed Original Model
Scale 2.6838E+02
Load: Combination

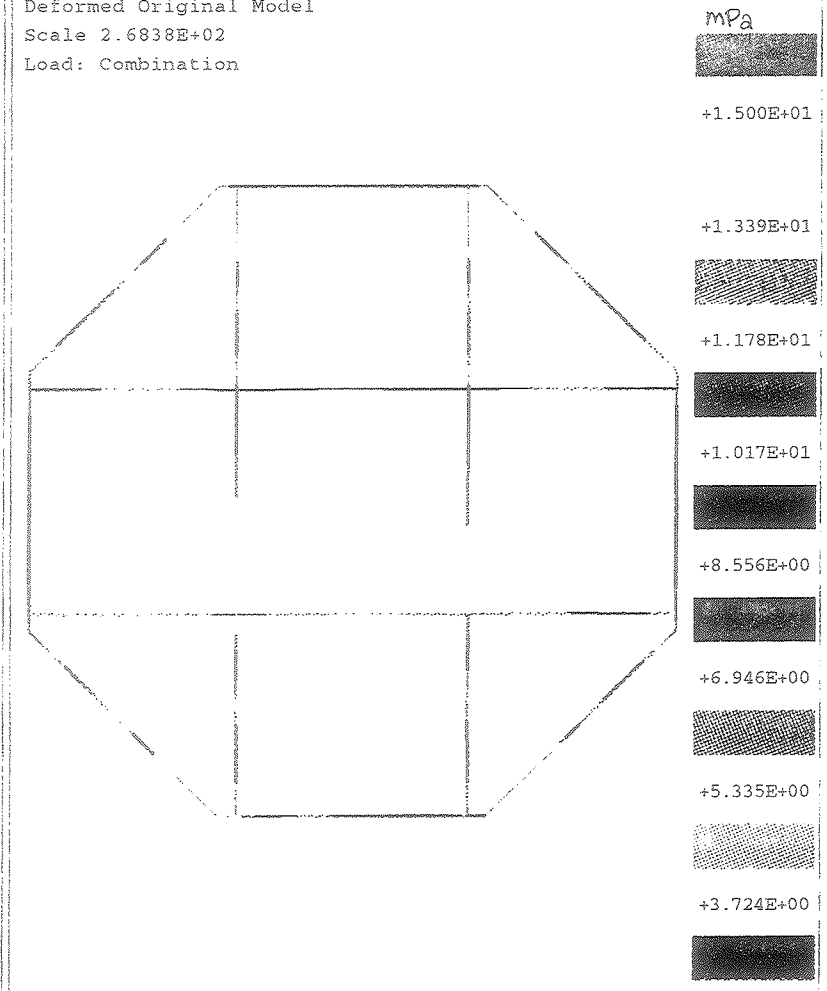

ProMECHANICA
Release:18
07/21/97 - 16:44

Horz Strongback - lite-16in frame +top
W16x45 vert, 16x4 tube frame, 16x4 cross beams
T.Ladnal - ATEC

PARAMETRIC
TECHNOLOGY
CORPORATION

units: MPa.

		Horz. Stress			Vert. Stress		
		Bend	Tensile	Torsion	Bend	Tensile	Torsion
TOP	grav	1.74	0	-1.74	0.7	0	0
	load	17.8	0	0.16	0	0	0
TOP left		0.28	0	-0.096	0.091	0.11	0
		4.9	0	3.4	.008	-0.74	0
Vert left		7.1	0	0.56	0.02	1.[illegible]	0
		16.1	0	1.3	0.6[illegible]	6.58	0
mid left		7.8	0	0.013	0.041	0.26	0
		17.5	0	0.04	0.31	-0.61	0
low left		4.04	0	2.4	0.9	-0.14	0
		10.0	0	6.12	17.2	-0.92	0
cross up		2.51	0	0.53	0.7[illegible]	-0.46	0
		6.1	0	1.8	0.27	0.[illegible]	0
cross low		2.8	0	-0.61	0.5[illegible]	0.04	0
		6.6	0	-1.3	0.49	0.38	0
mid vert left		12.6	0	-1.5	0.11	0.97	0
		25.6	0	-3.26	1.2	6.6	0
cross mid low		3.6	0	0.08	0.34	0.045	0
		9.54	0	0.16	0.57	-0.07	0
low RT		2.6	0	1.5	0.93	-0.05	0

SIMULATION/LOAD RESULTS
Run #. ds-strng 16 rev A.
MEMBER STRESSES
see Fig. 1

Run #: ds_STRNG16revA (Fig 1)

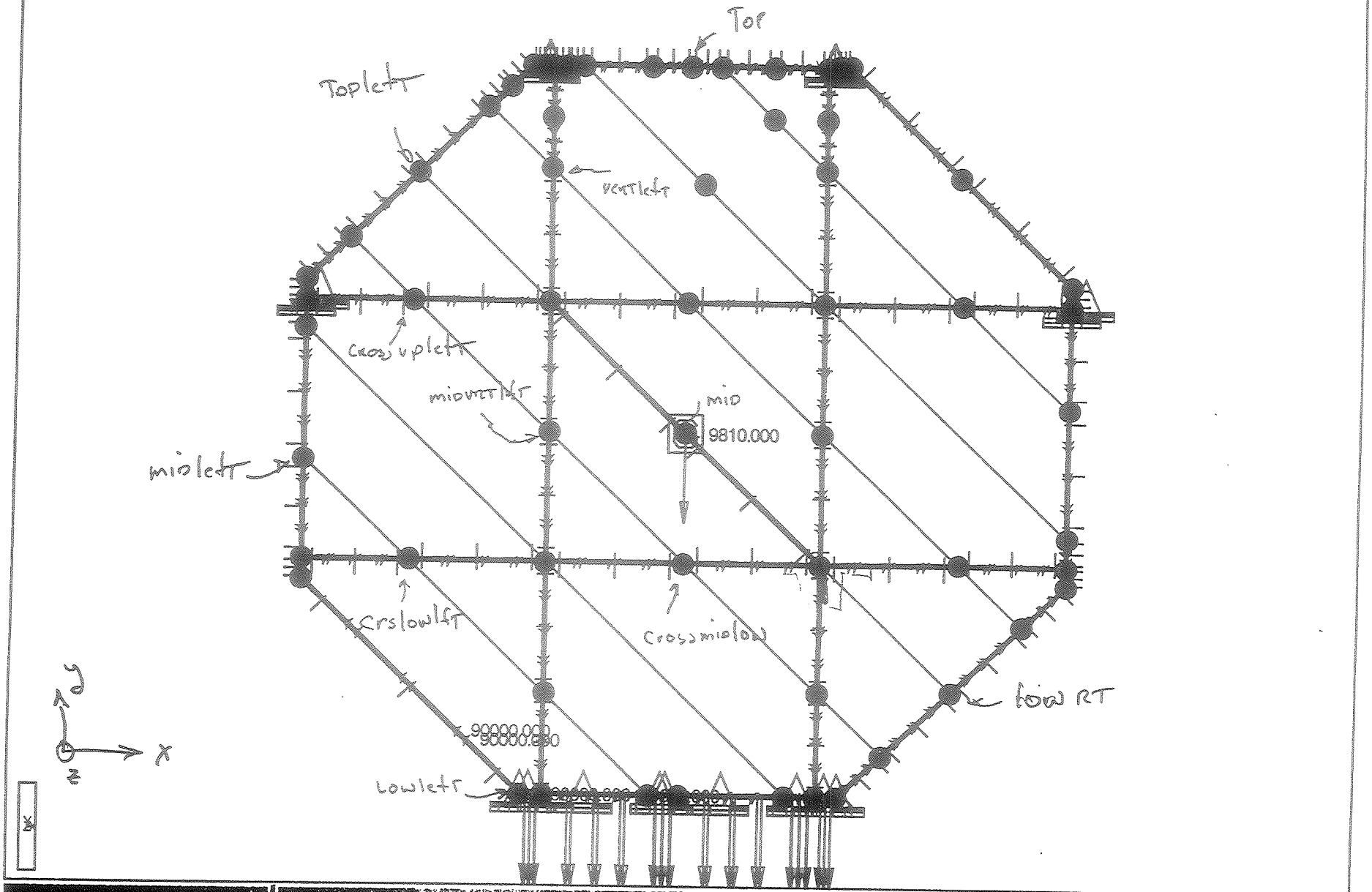

PARAMETRIC TECHNOLOGY CORPORATION

MINOS Strongback - 16ft

16x4 tube frame, 16x8 cross, W16x40 beam

PARAMETRIC TECHNOLOGY CORPORATION

Displacement Mag
Max +2.5968E+00
Min +0.0000E+00
Deformed Original Model
Scale 3.0351E+02
Load: Combination

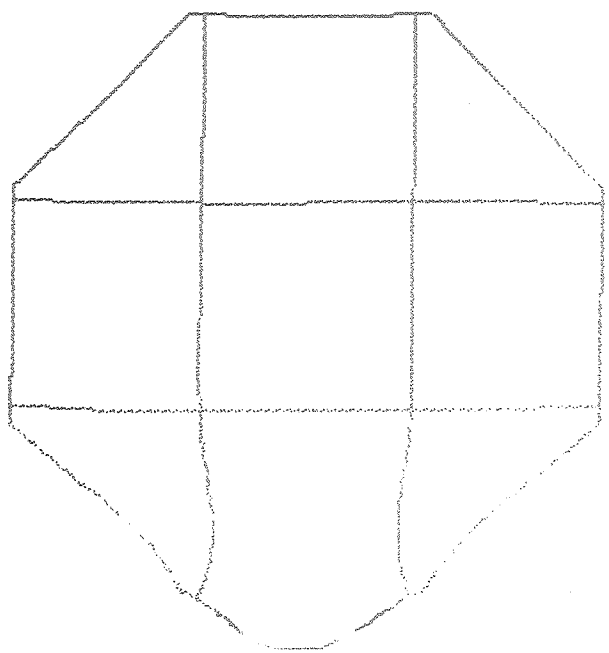

mm
+2.308E+00
+2.020E+00
+1.731E+00
+1.443E+00
+1.154E+00
+8.656E-01
+5.771E-01
+2.885E-01

ls_litesback16/an_hanging / vert

Maximum Total Beam Stress
Max +6.0244E+01
Min -6.7649E-01
Deformed Original Model
Scale 3.0351E+02
Load: Combination

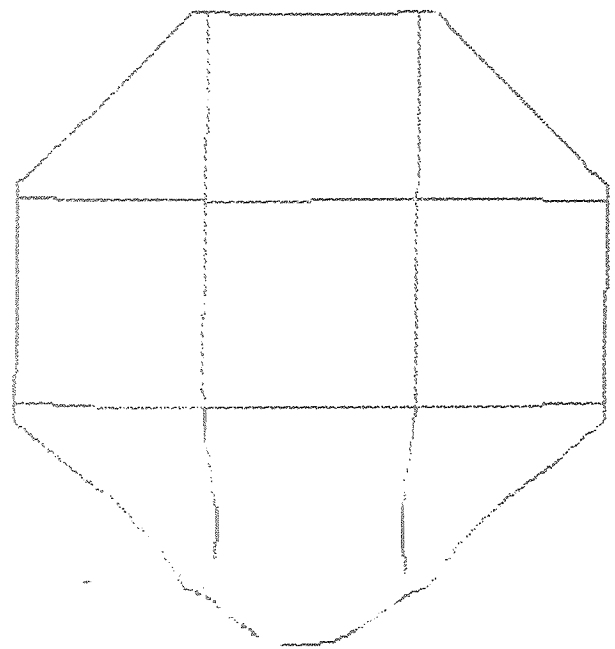

MPa
+5.000E+01
+4.373E+01
+3.746E+01
+3.118E+01
+2.491E+01
+1.864E+01
+1.237E+01
+6.093E+00

ls_litesback16/an_hanging / vert

Pro/MECHANICA
Release 18

07/21/97 - 16:44

VERT - Strongback-lite 16in frame-top

W16x45 vert, 1x4 tube frame, 16x8 cross beams
T. Ladran - ATEG

PARAMETRIC
TECHNOLOGY
CORPORATION

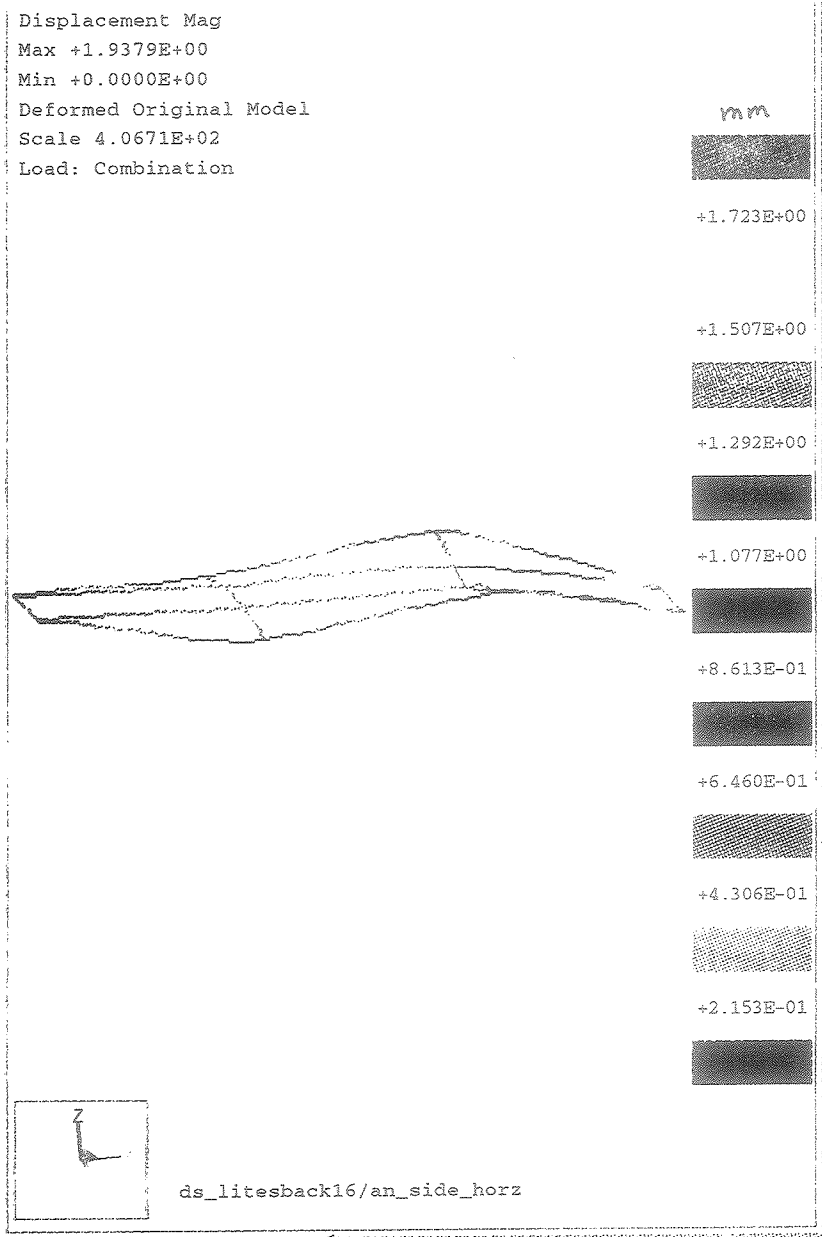

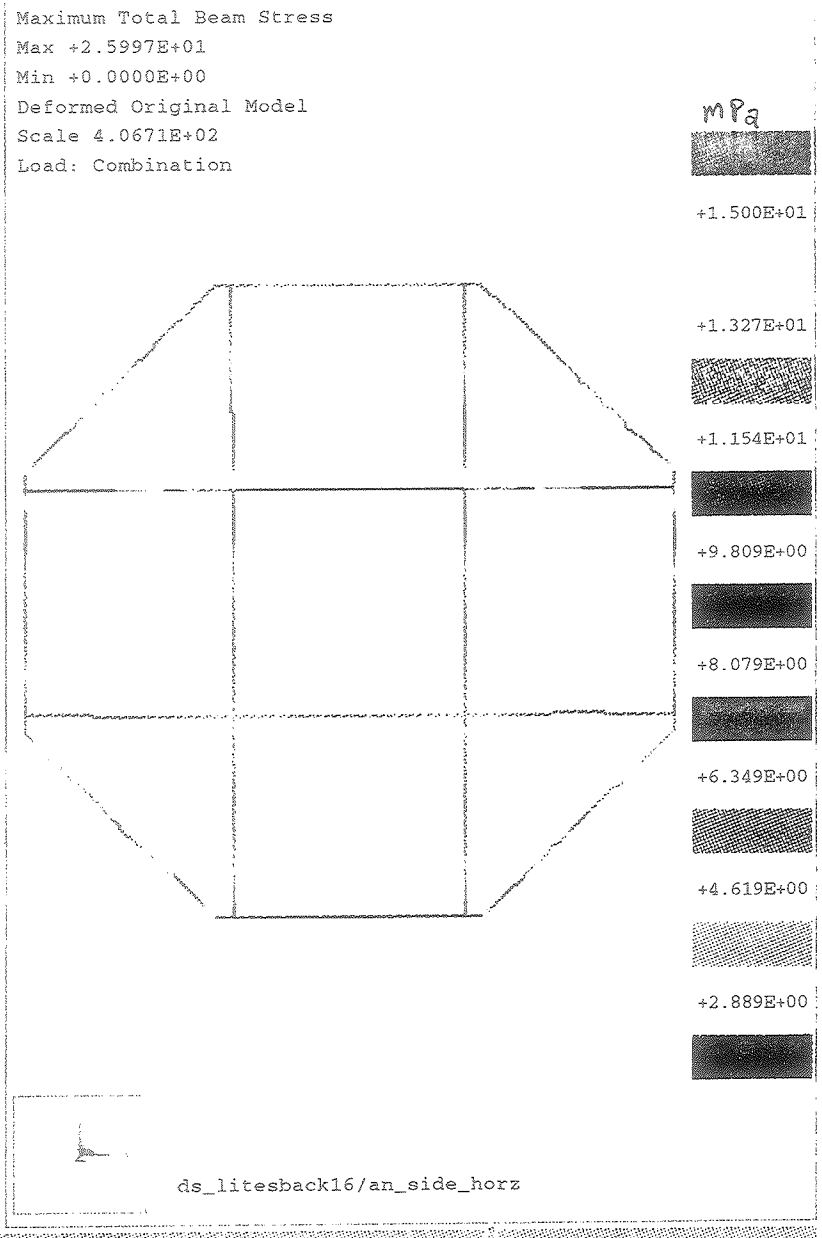

ProMECHANICA Release 18

07/21/97 - 16:52

Horz Strongback - lhc 16in frame - side

W16x45 vert, 16x4 tube frame, 10x8 cross beams

T. Ladron - ATEG

PARAMETRIC TECHNOLOGY CORPORATION

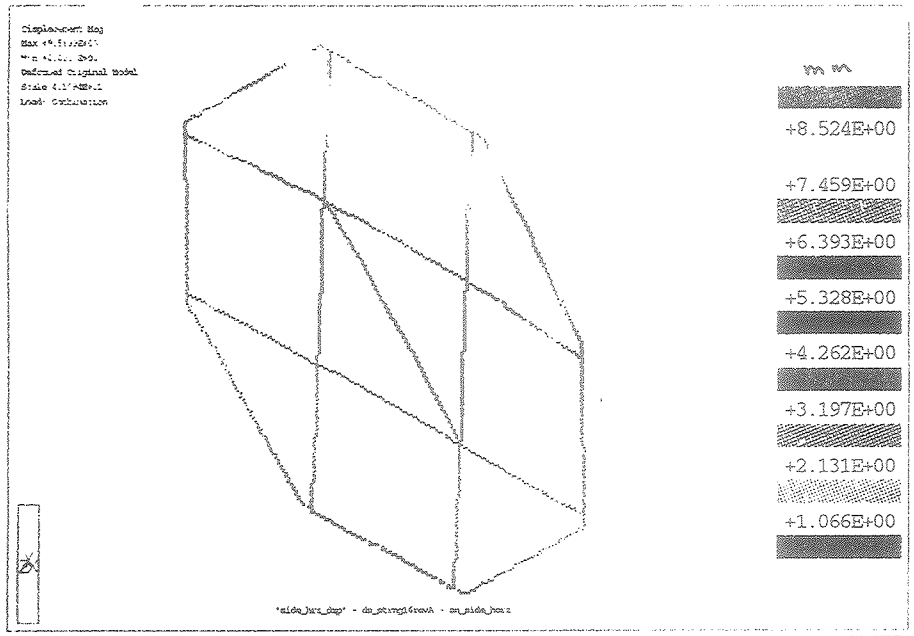

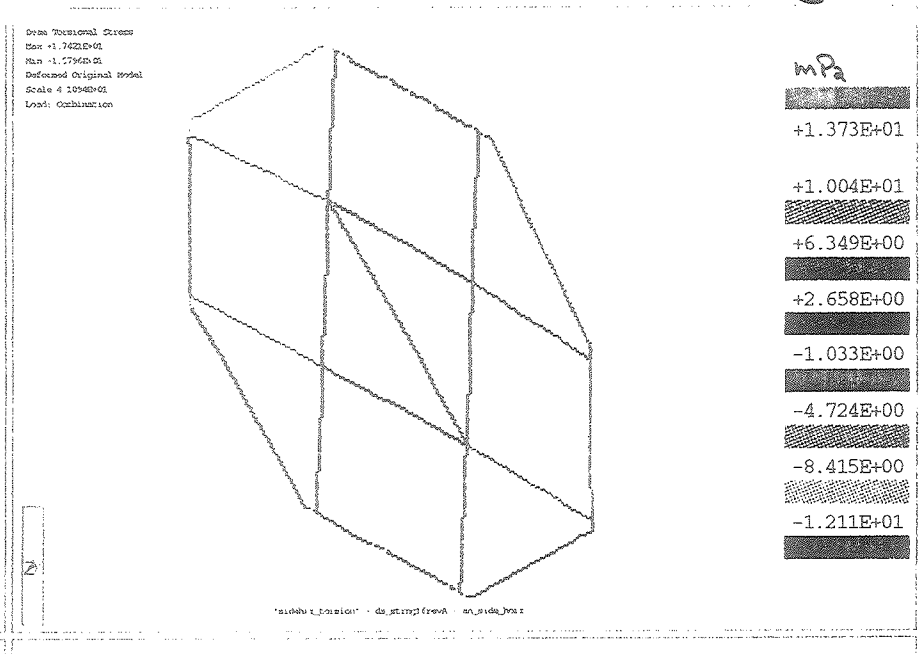

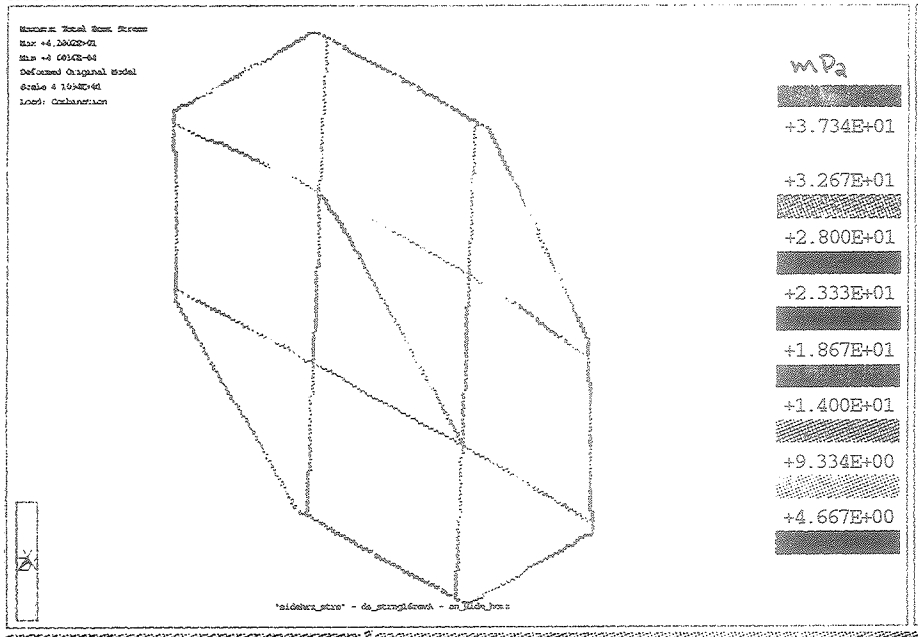

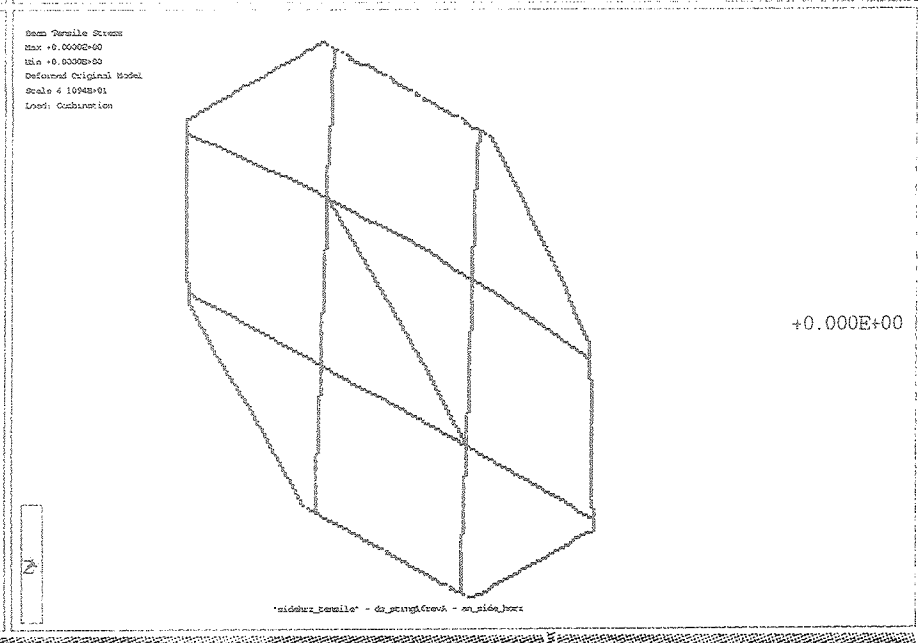

ProMECHANICA
Release 18

07/31/92 - 11:44

MINOS Strongback - 16 in Horz sidesupprt

16x4 tube frame, 16x8 cross, W16x40 I-beam

file stringlrevA T. Laoran LLNL

PARAMETRIC
TECHNOLOGY
CORPORATION

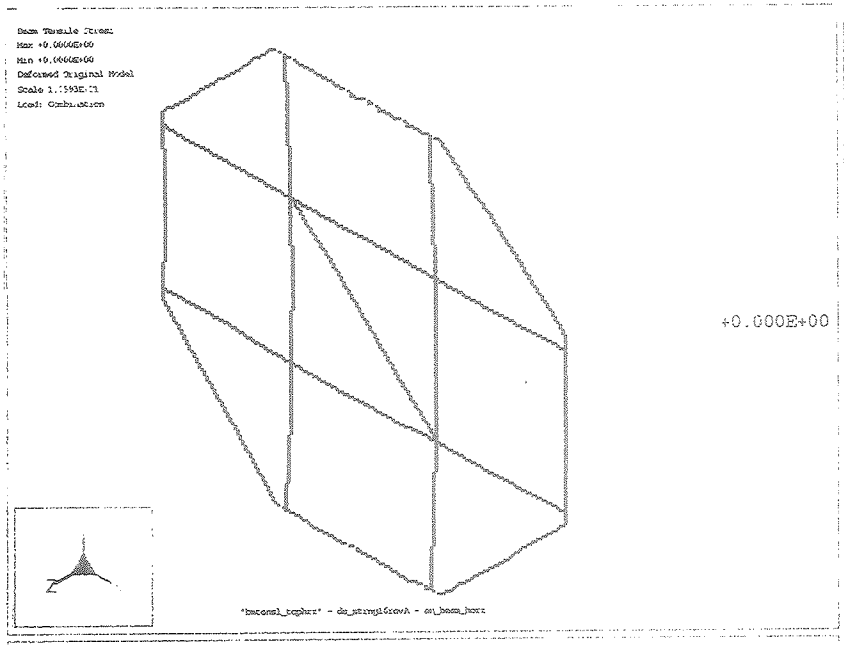

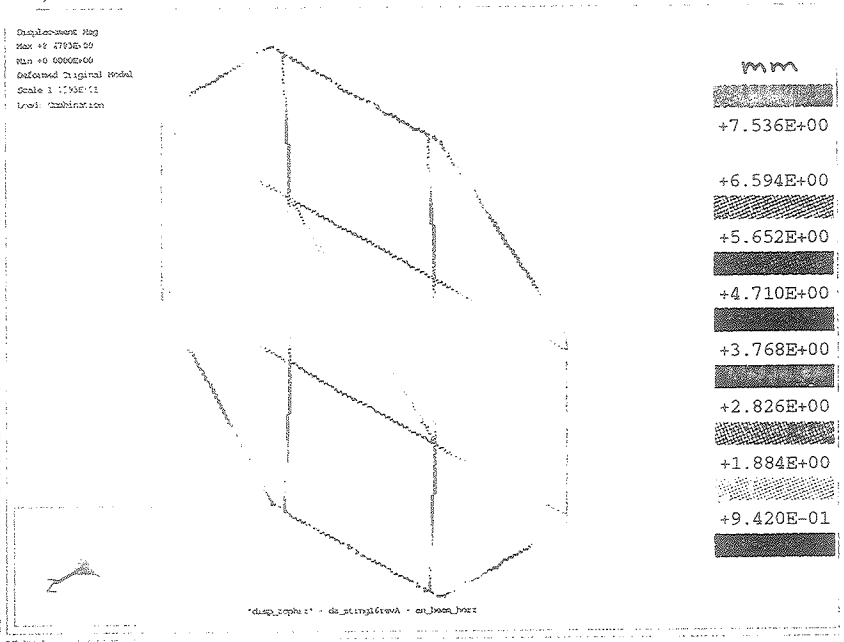

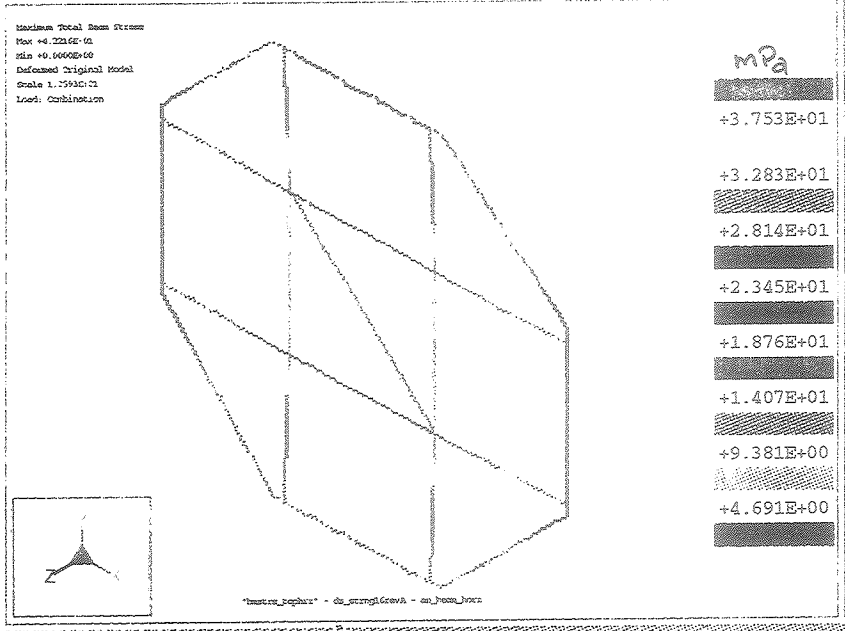

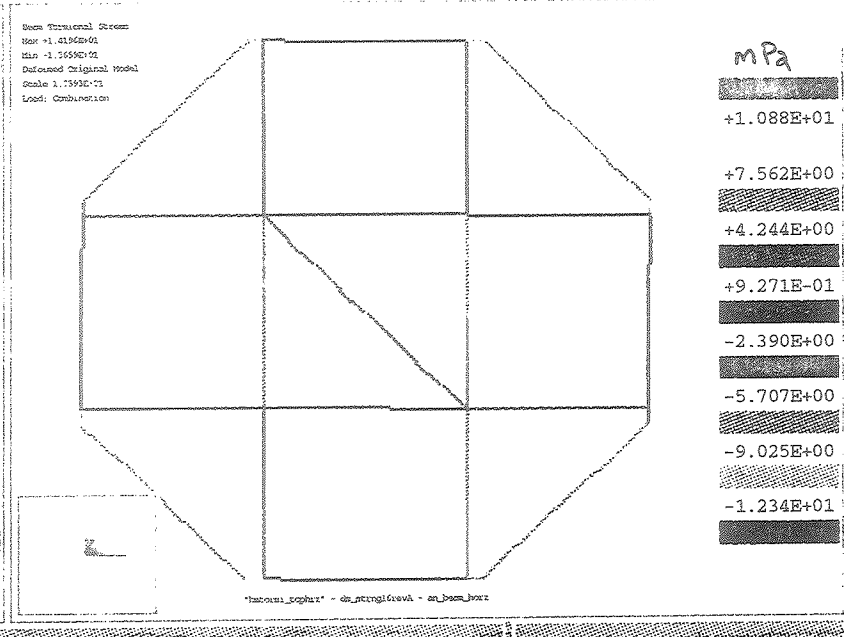

Pro/MECHANICA
Release 18

08/02/97 - 12:12

MINOS Strongback - 16 m. Horziop

16x4 tube frame, 15x8 cross, W16x40 I-beam, [mmNS]
file: strngbk16_revA T. Ladran, LLNL

PARAMETRIC
TECHNOLOGY
CORPORATION

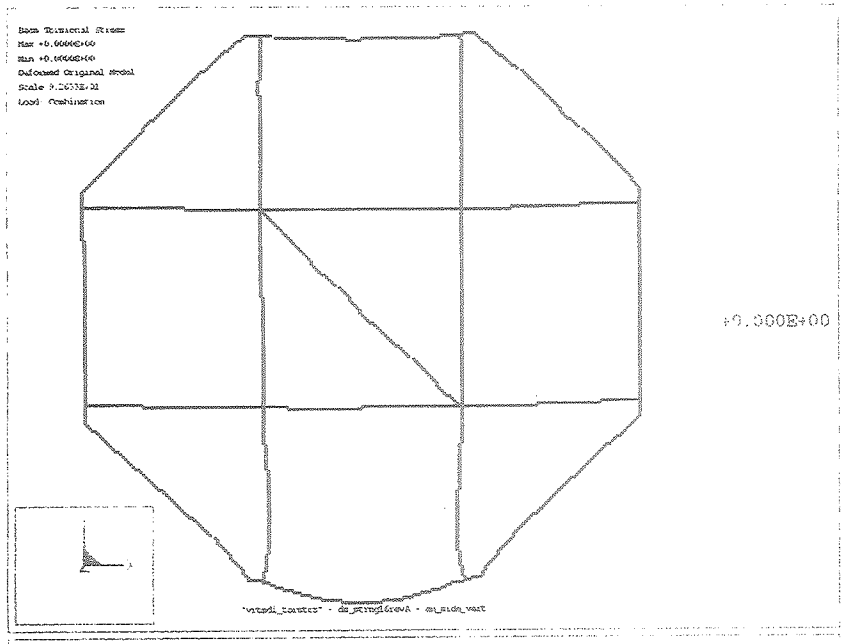

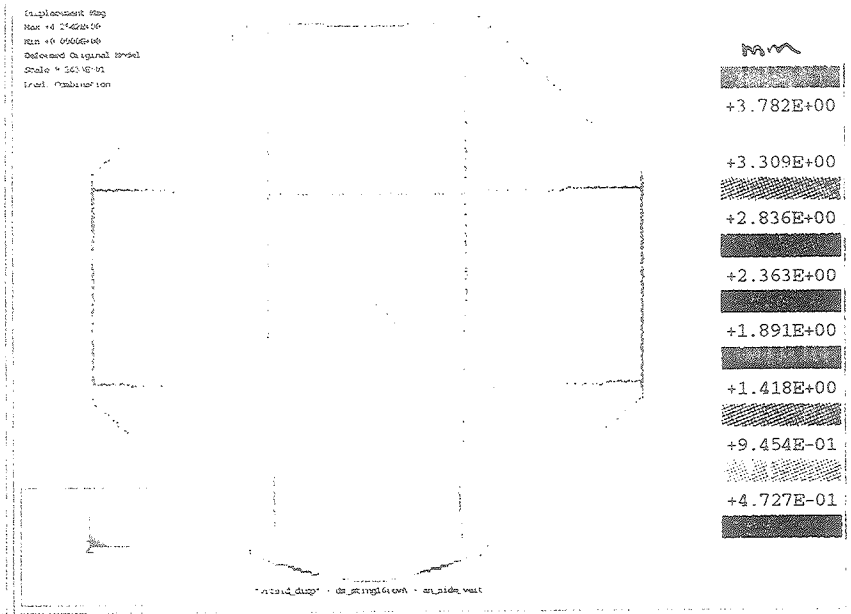

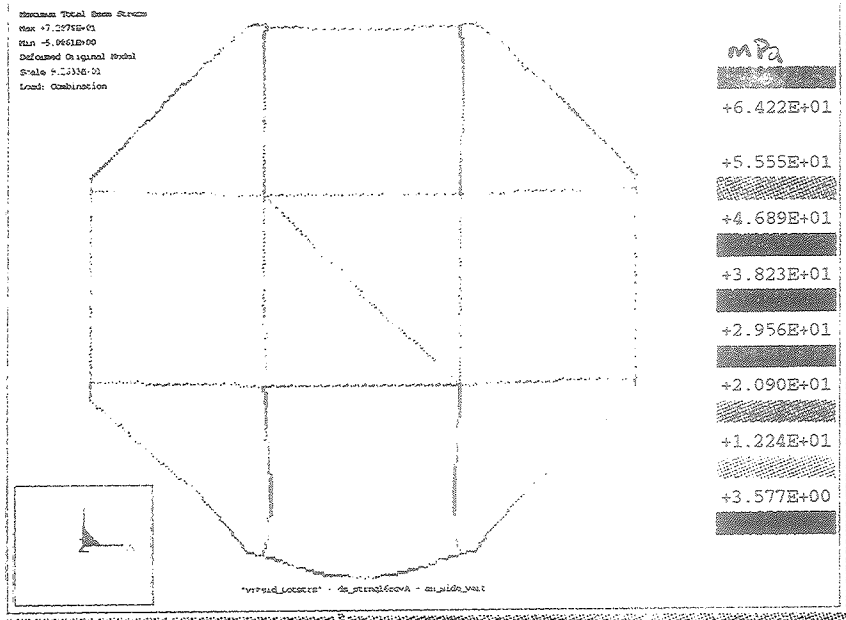

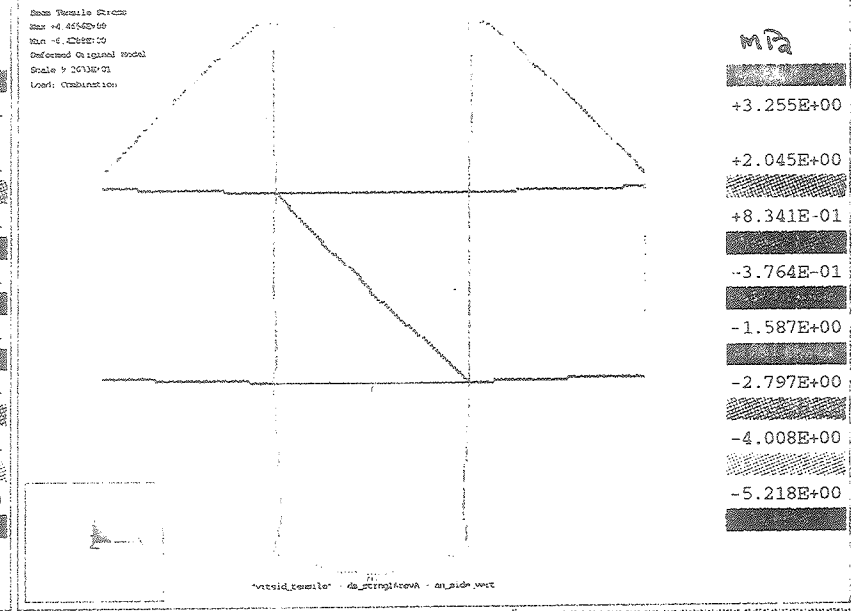

Pro/MECHANICA
Release 18

08/02/97 - 13:23

MINOS Strongback - 16 in. verUsidesupH

16x4 tube frame (16x3 cross) - W16x40 I-beam 1m in NSI

file: stngbk16_revA - T. Ladran - LLNL

PARAMETRIC TECHNOLOGY CORPORATION

Displacement Mag
Max +3.2297E+00
Min +0.0000E+00
Deformed Original Model
Scale 2.4403E+02
Load: Combination

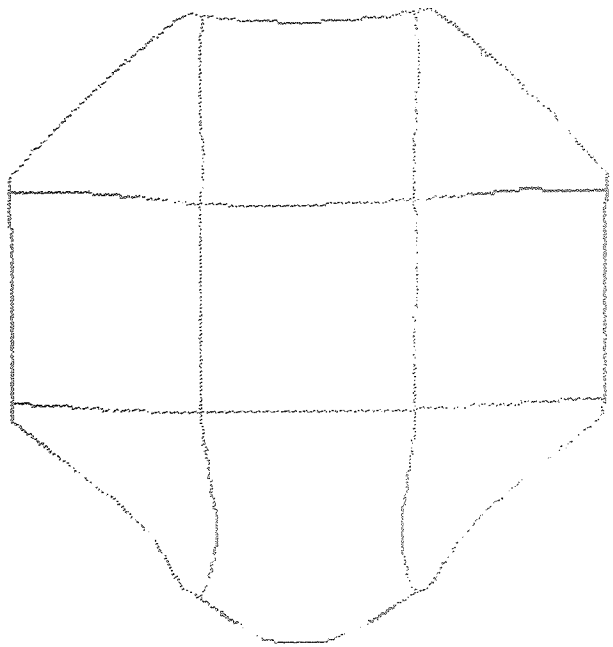

mm

+2.871E+00
+2.512E+00
+2.153E+00
+1.794E+00
+1.435E+00
+1.077E+00
+7.177E-01
+3.589E-01

ds_litesback/an_side_vert

Maximum Total Beam Stress
Max +6.6415E+01
Min -4.1071E+00
Deformed Original Model
Scale 2.4403E+02
Load: Combination

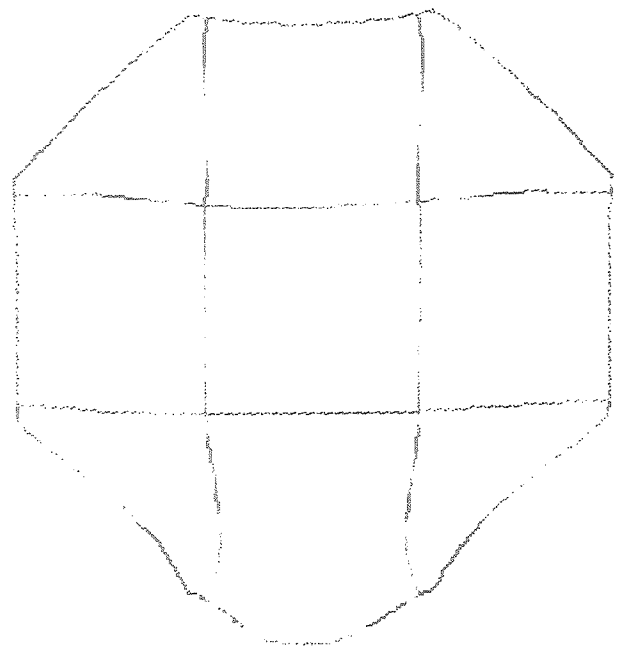

mPa

+3.000E+01
+2.625E+01
+2.249E+01
+1.874E+01
+1.499E+01
+1.123E+01
+7.482E+00
+3.729E+00

ds_litesback/an_side_vert

Pro/MECHANICA
Release 18
07/21/97 - 16:55

vertStrongback-litc 16in frame--side
W10x45 vert.16x4tube frame-16x8cross beams
T.Ladrun-ATEC

PARAMETRIC
TECHNOLOGY
CORPORATION

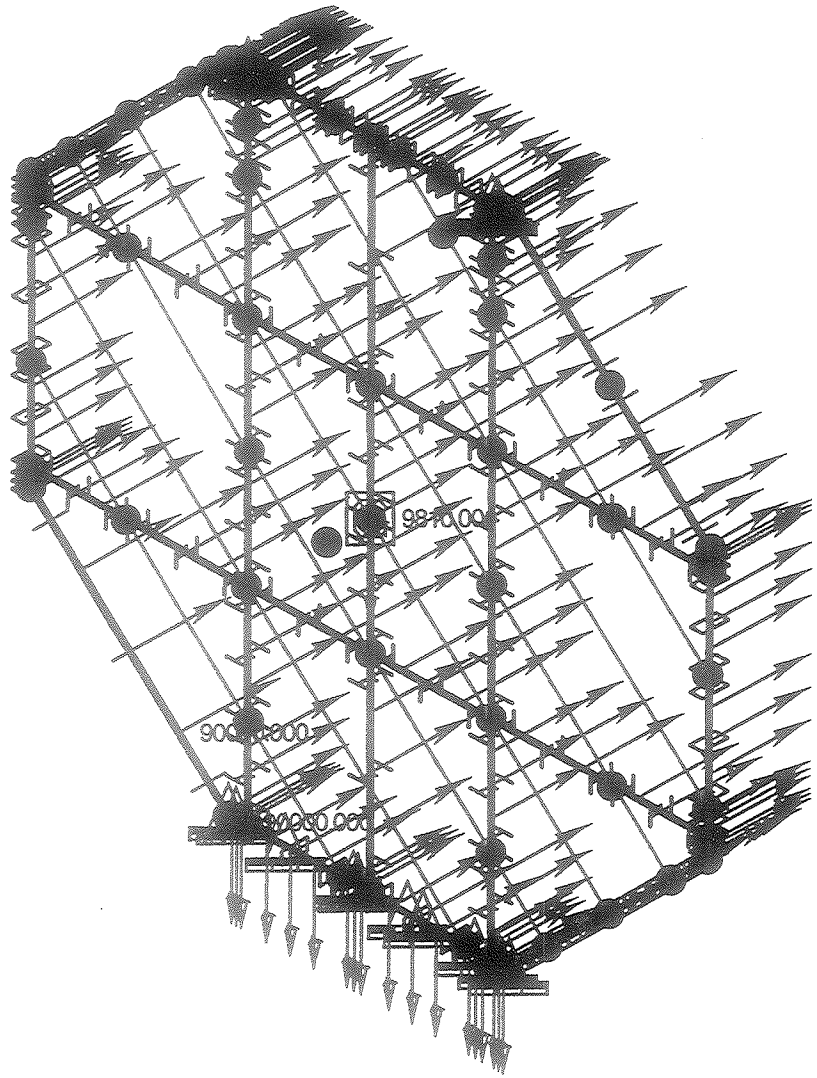

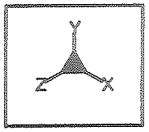

PARAMETRIC TECHNOLOGY CORPORATION

MUNOS

PARAMETRIC TECHNOLOGY CORPORATION

Displacement Mag
Max +4.3260E-01
Min +0.0000E+00
Deformed Original Model
Scale 2.0000E+02
Load: Combination

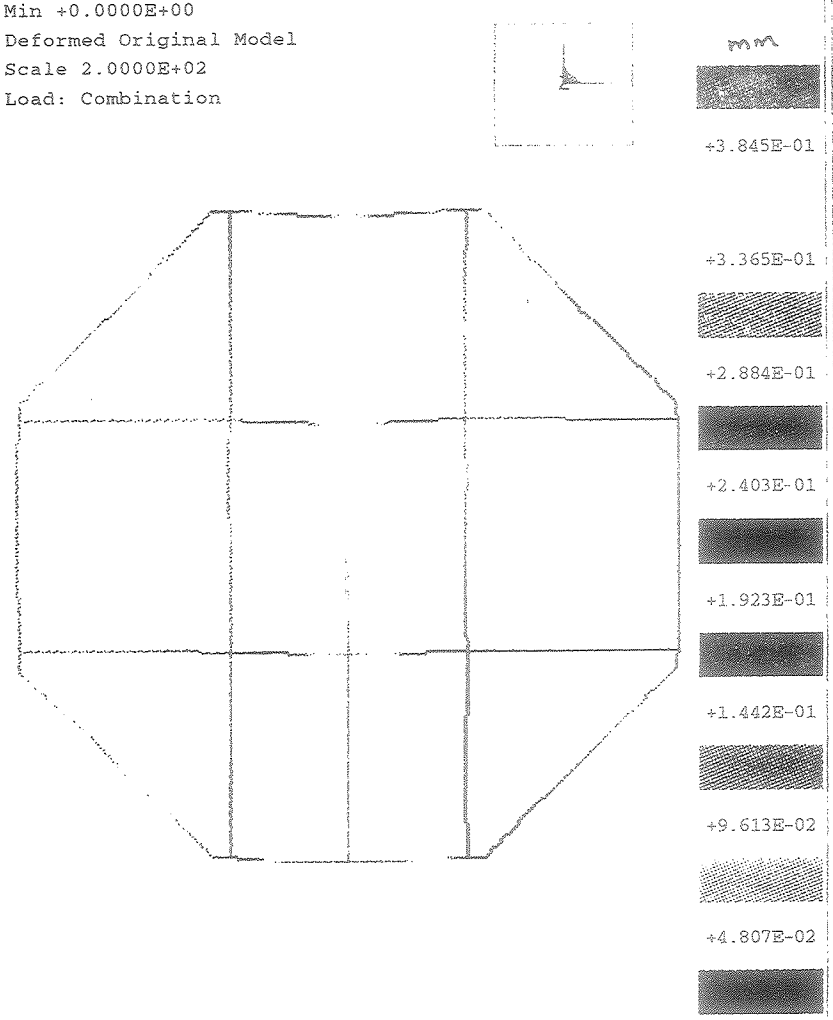

Vertical/model:litebackcombo

Stress Von Mises (Maximum)
Max +2.0115E+01
Min +0.0000E+00
Deformed Original Model
Scale 2.0000E+02
Load: Combination

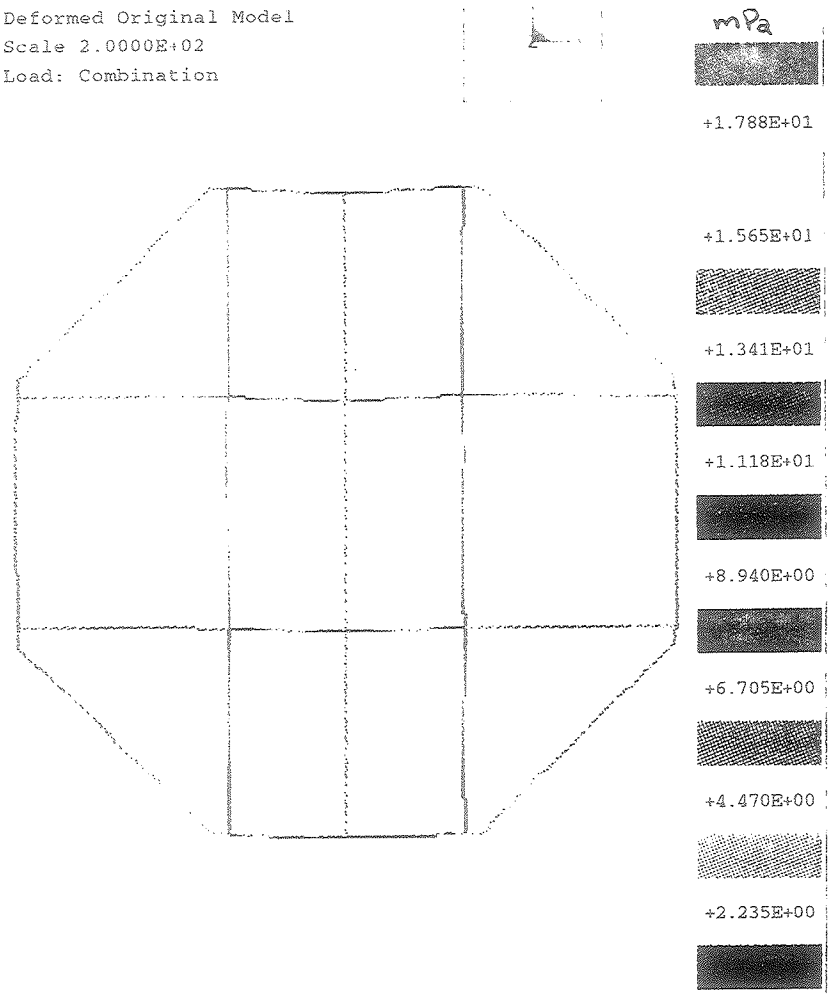

Vertical/W12x45;12x6 tube;W10x33; 4 metric tons

Pro/MECHANICA
Release 18

09/17/97 - 11:47

MINGS - LiteStrongback 4 metric tons

W12x45 vert. with 12x6 rect tube, W10x33 cross
1g vertical + 9 ton steel plate - T. Ladran ATEG

PARAMETRIC
TECHNOLOGY
CORPORATION

Stress Von Mises (Maximum)
Max +3.2368E+01
Min +2.8260E+00
Deformed Original Model
Scale 7.9262E+01
Load: Combination

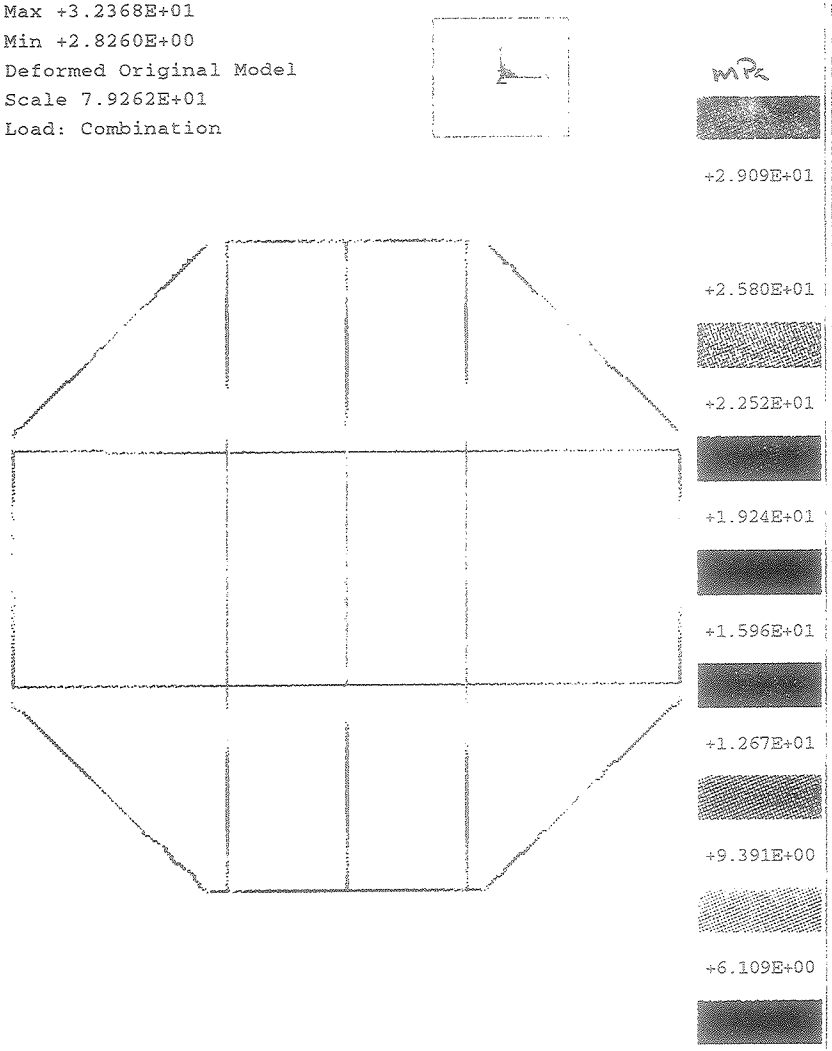

Horz/"litebackcombo"/W12x45, 12x6 tube, 4met tons

Displacement Mag
Max +9.9437E+00
Min +0.0000E+00
Deformed Original Model
Scale 7.9262E+01
Load: Combination

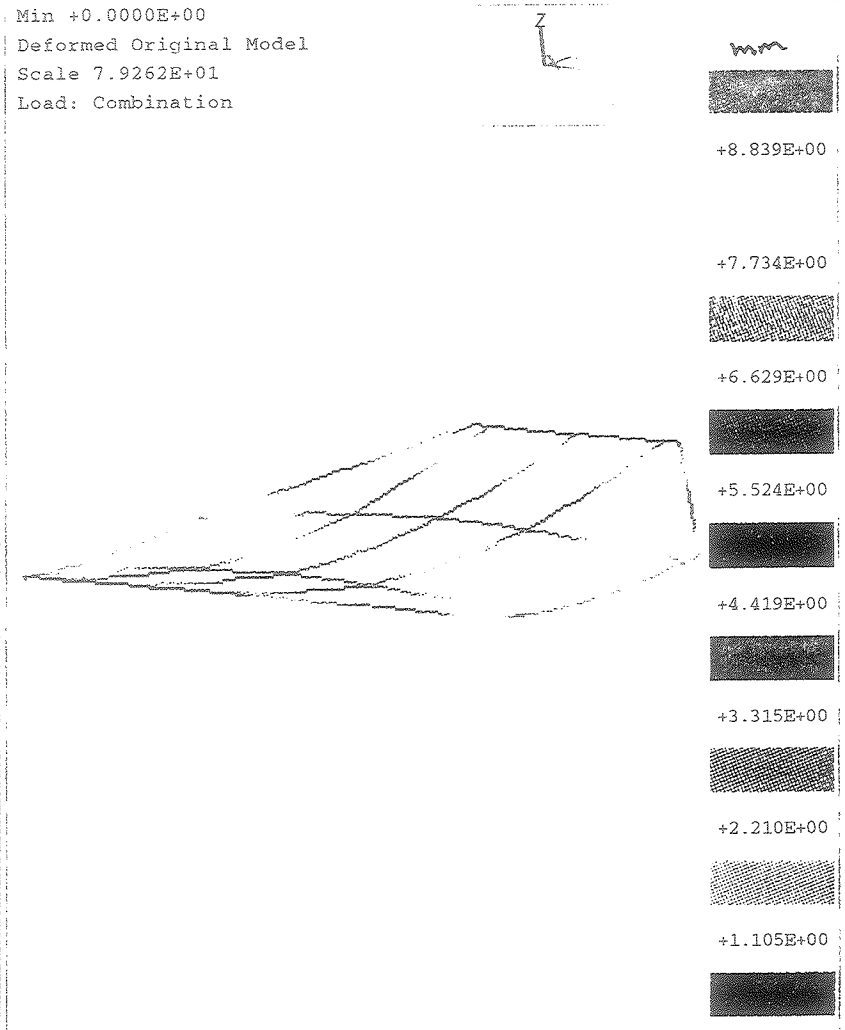

Horz/"litebackcombo"/W12x45, 12x6 tube, 4met tons

Pro/MECHANICA Release 18 09/17/97 - 11:32	MINOS - LineStrongback 4 metric tons W12x45 vert, with 12x6 rect frame, W10x33 cross 1g vertical + 9 lateral plane - T Ladran ATEG	PARAMETRIC TECHNOLOGY CORPORATION

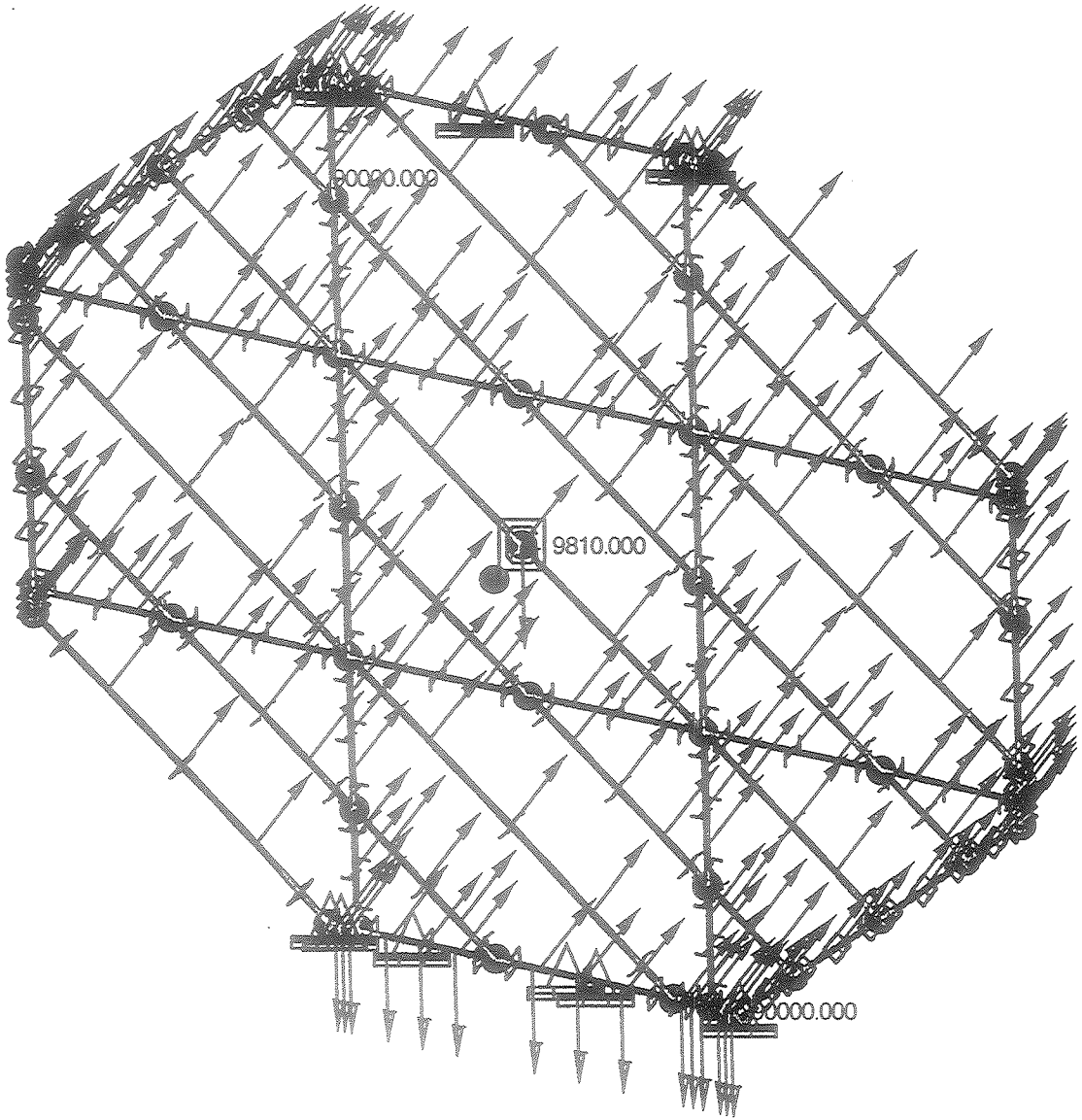

PARAMETRIC TECHNOLOGY CORPORATION

Stress Von Mises (Maximum)
Max +2.6513E+01
Min +0.0000E+00
Deformed Original Model
Scale 2.0000E+02
Load: Combination

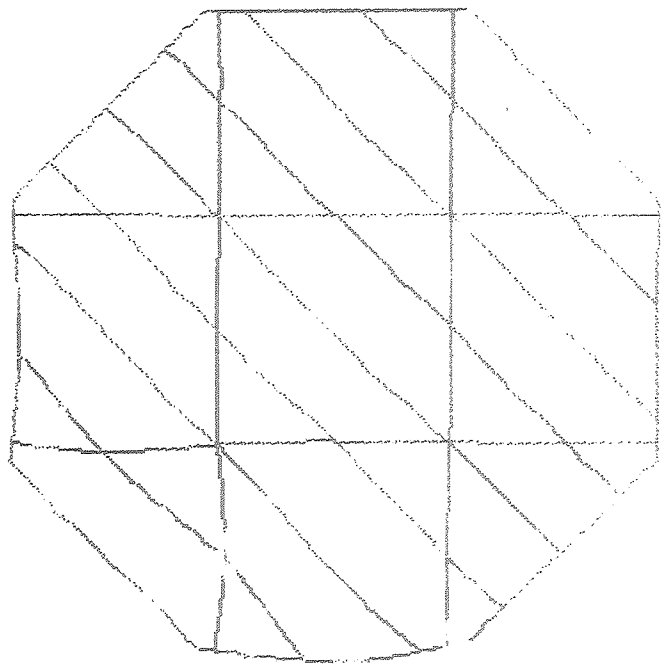

MPa

+2.357E+01
+2.062E+01
+1.768E+01
+1.473E+01
+1.178E+01
+8.838E+00
+5.892E+00
+2.946E+00

ds_10diag_bm/an_hanging/vertical

Displacement Mag
Max +1.2244E+00
Min +0.0000E+00
Deformed Original Model
Scale 2.0000E+02
Load: Combination

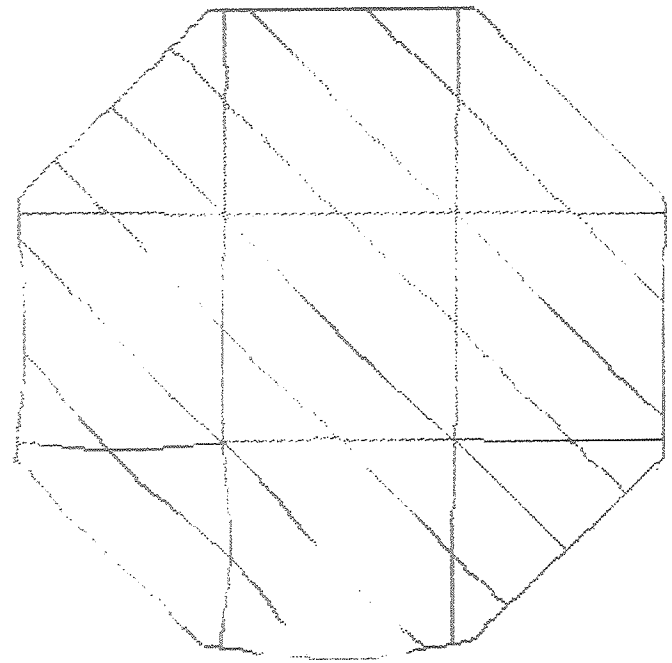

mm

+1.088E+00
+9.523E-01
+8.163E-01
+6.802E-01
+5.442E-01
+4.081E-01
+2.721E-01
+1.360E-01

ds_10diag_bm/an_hanging/vertical

Pro/MECHANICA
Release 18

09/17/97 - 11:38

MINOS : diag10bm_jubc [- 5.04 metric tons]

ST0x25.4 I-beams with 10'x6' frame
1g + structure load + 8 ton steel plane

PARAMETRIC
TECHNOLOGY
CORPORATION

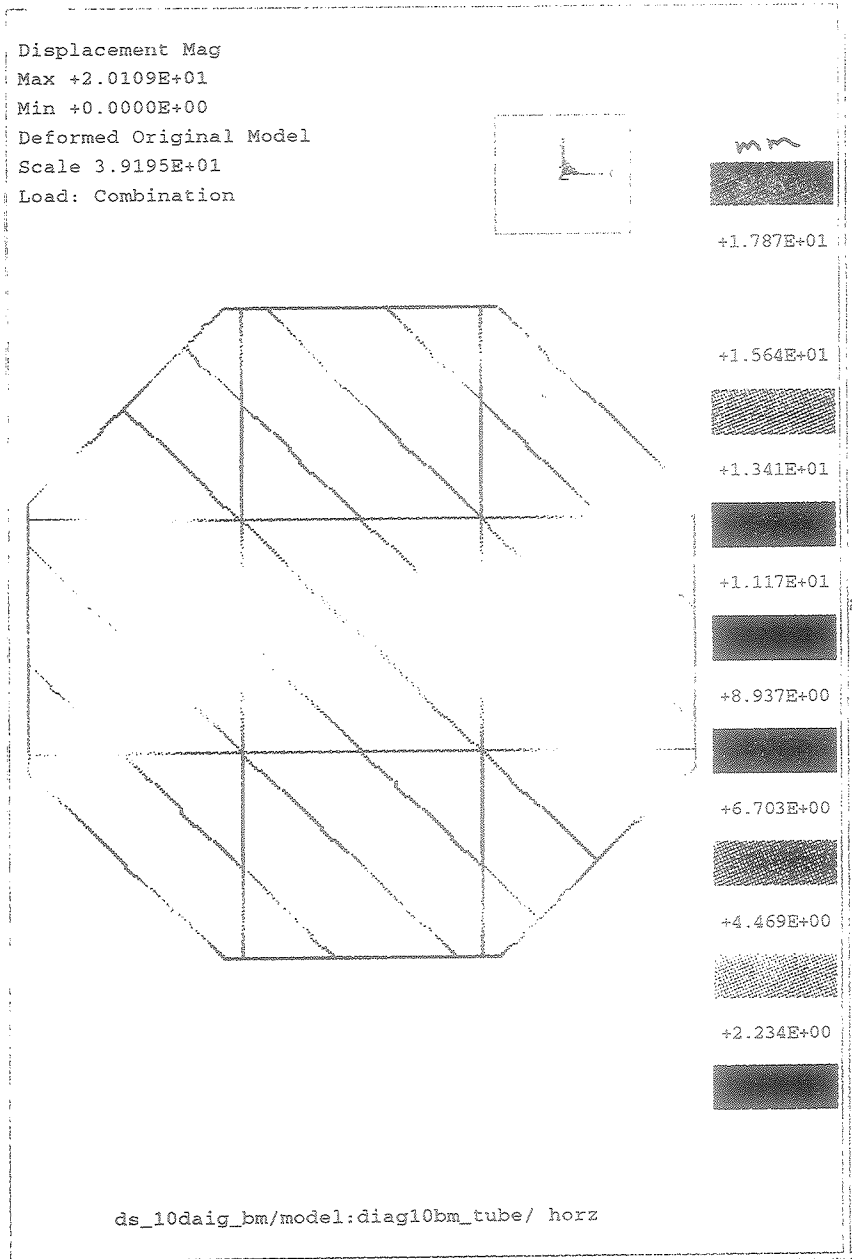

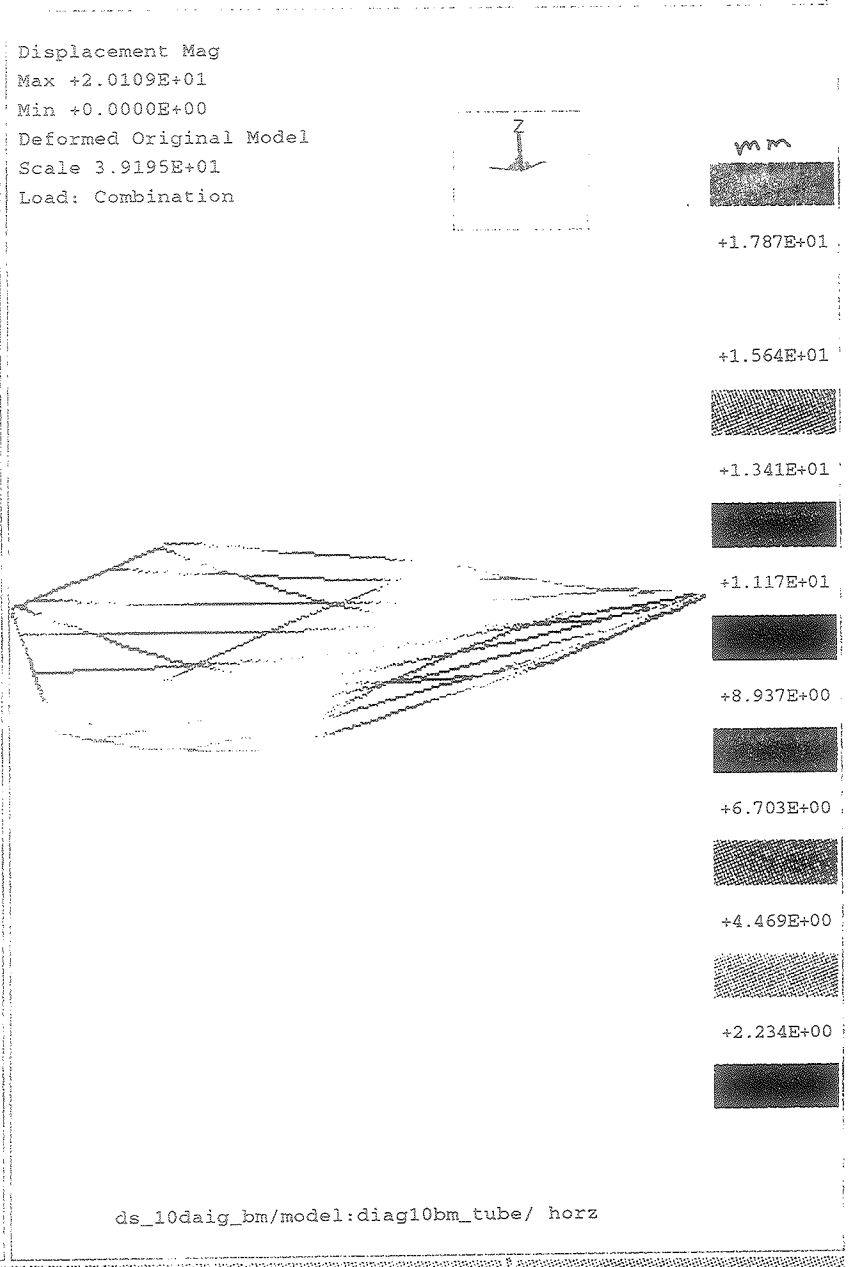

Pro/MECHANICA
Release 18

09/17/97 11:38

MINOS diag10bm_tube SI04 metric tons

S10x25.4 I-beams with 10" x 6" frame
1g + structure load + 8 ton steel plane

PARAMETRIC TECHNOLOGY CORPORATION

Stress Von Mises (Maximum)
Max +1.1548E+02
Min +7.6126E-02
Deformed Original Model
Scale 1.5873E+01
Load: Combination

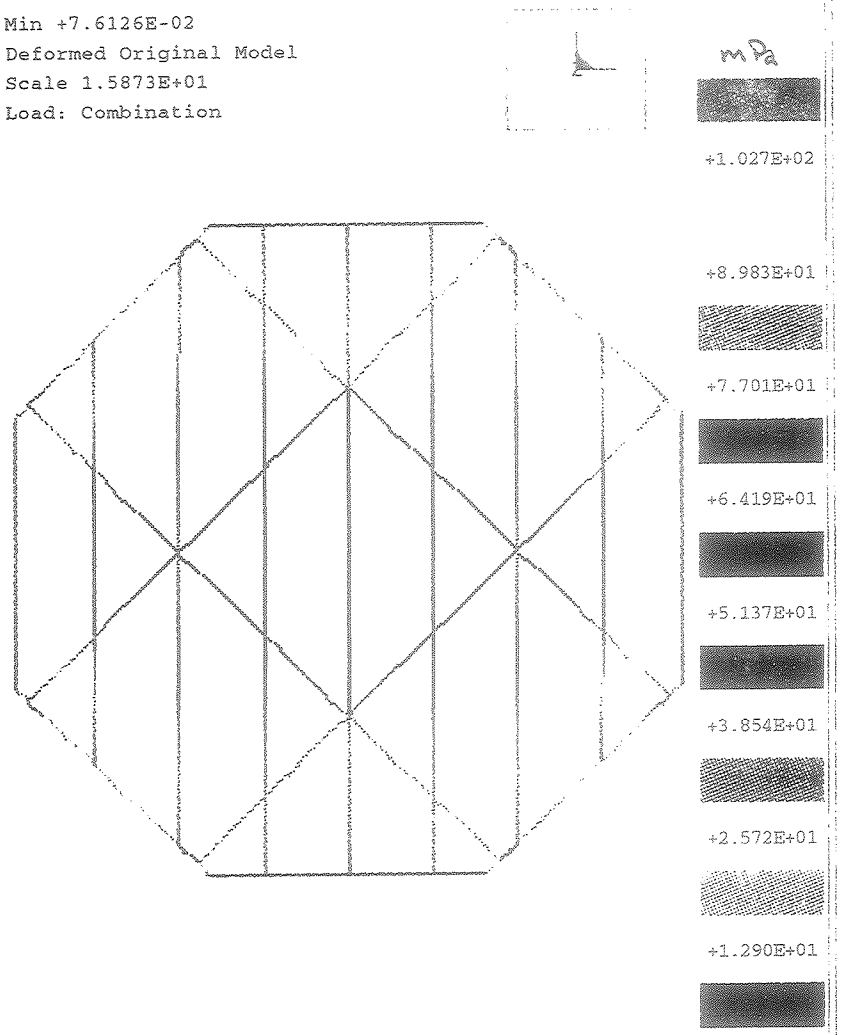

ds_diagstrgbk/horiz. load/S10x25.4 beams

Displacement Mag
Max +4.9654E+01
Min +0.0000E+00
Deformed Original Model
Scale 1.5873E+01
Load: Combination

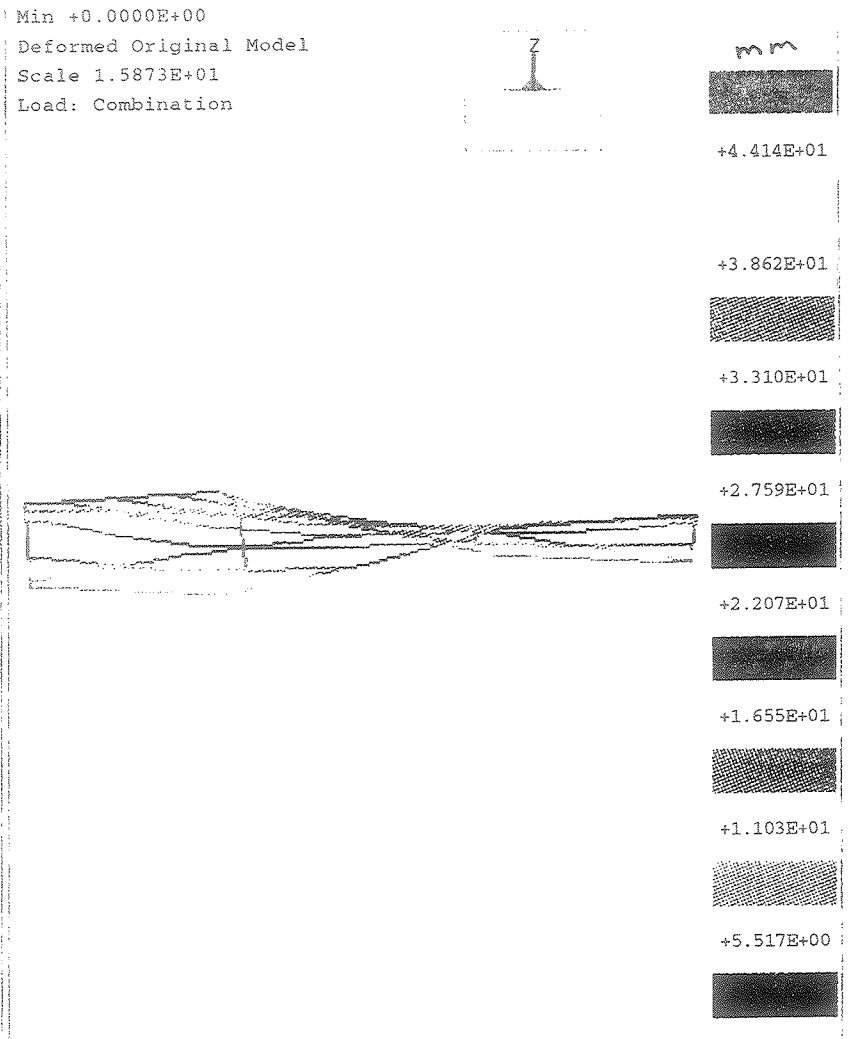

ds_diagstrgbk/horiz. load/S10x25.4 beams

Pro/MECHANICA
Release 18

09/17/97 - 10:29

Review strongback with diagonal supports
S10x25.4lbs beam
T.Ladran, LLNL

PARAMETRIC
TECHNOLOGY
CORPORATION

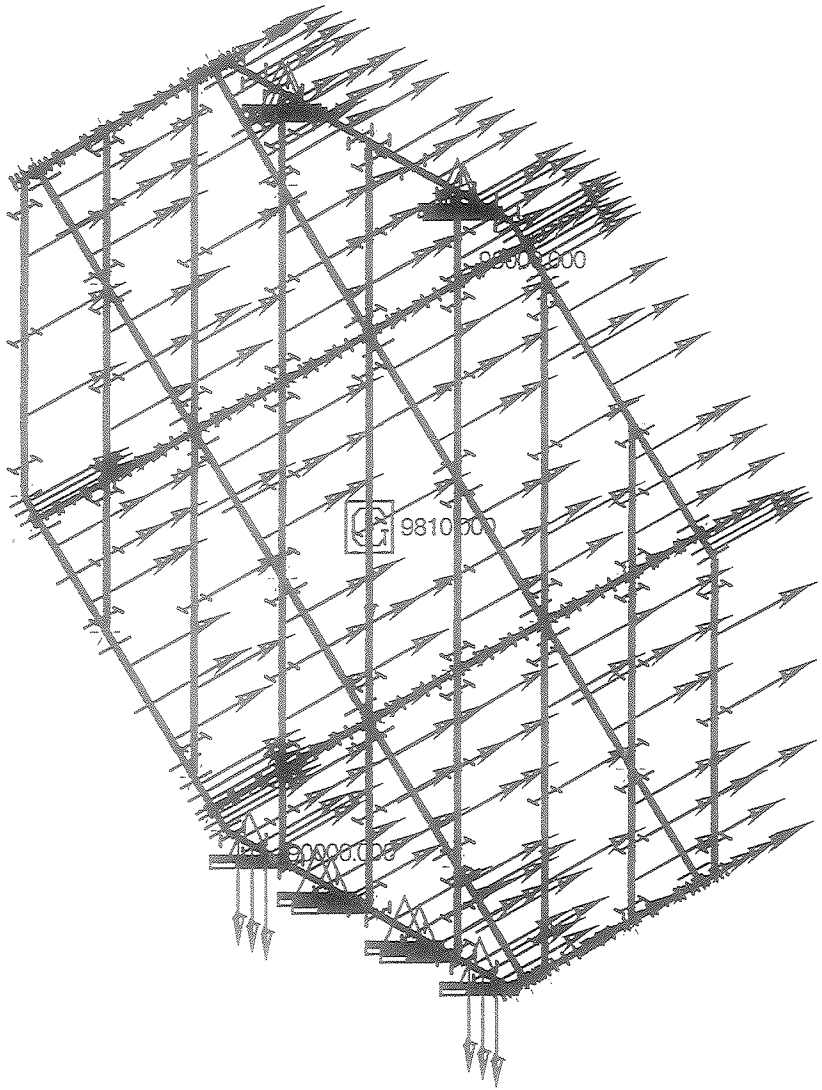

Pro/MECHANICA
Release 18

09/17/97 - 10:57

Review strongback with diagonal supports

S10x25.4lbs beam - 4.11 metre tons

model diag10beam - T. Ladran - LLNL

PARAMETRIC
TECHNOLOGY
CORPORATION

Stress Von Mises (Maximum)
Max +8.7062E+01
Min +0.0000E+00
Deformed Original Model
Scale 2.0000E+02
Load: Combination

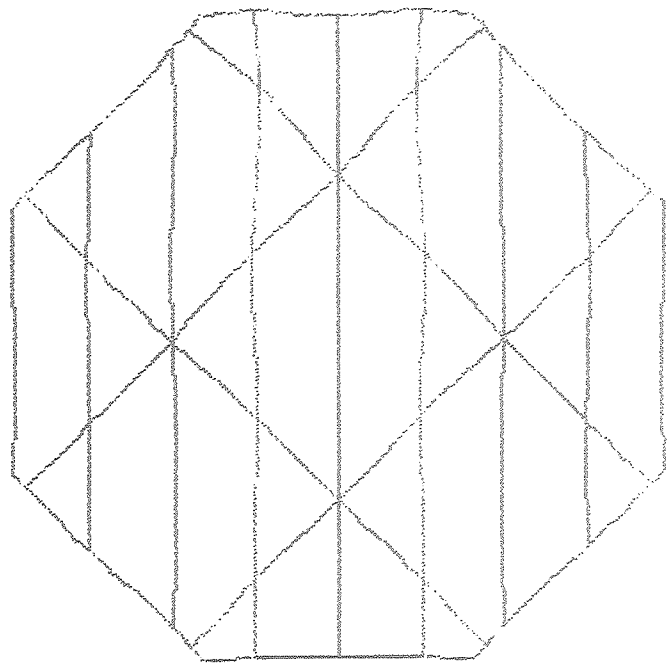

mPa

+7.739E+01
+6.771E+01
+5.804E+01
+4.837E+01
+3.869E+01
+2.902E+01
+1.935E+01
+9.674E+00

eview/ diag strongback/vert load/

Displacement Mag
Max +6.0584E-01
Min +0.0000E+00
Deformed Original Model
Scale 2.0000E+02
Load: Combination

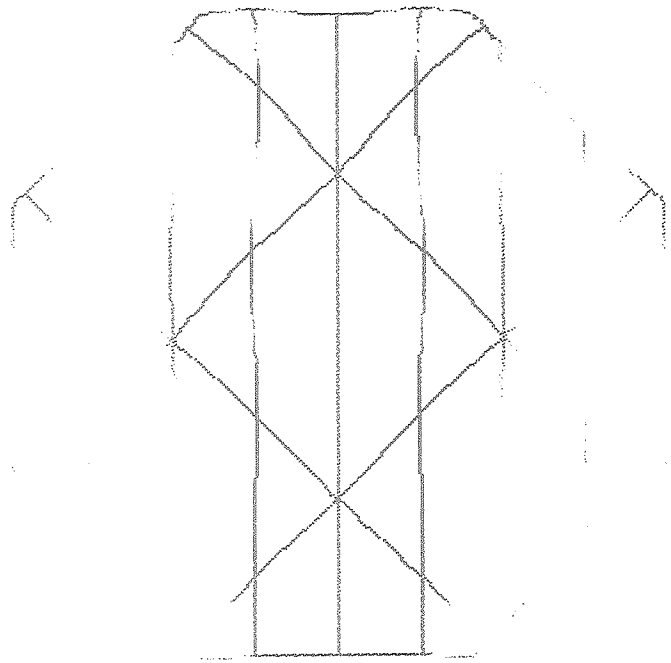

mm

+5.385E-01
+4.712E-01
+4.039E-01
+3.366E-01
+2.693E-01
+2.019E-01
+1.346E-01
+6.732E-02

eview/ diag strongback/vert load/

Pro/MECHANICA
Release 18
09/17/97 10:51

Review strongback with diagonal supports
S10x25.4ubeam 411 nodes/elems
Tsaum LLNL

PARAMETRIC
TECHNOLOGY
CORPORATION

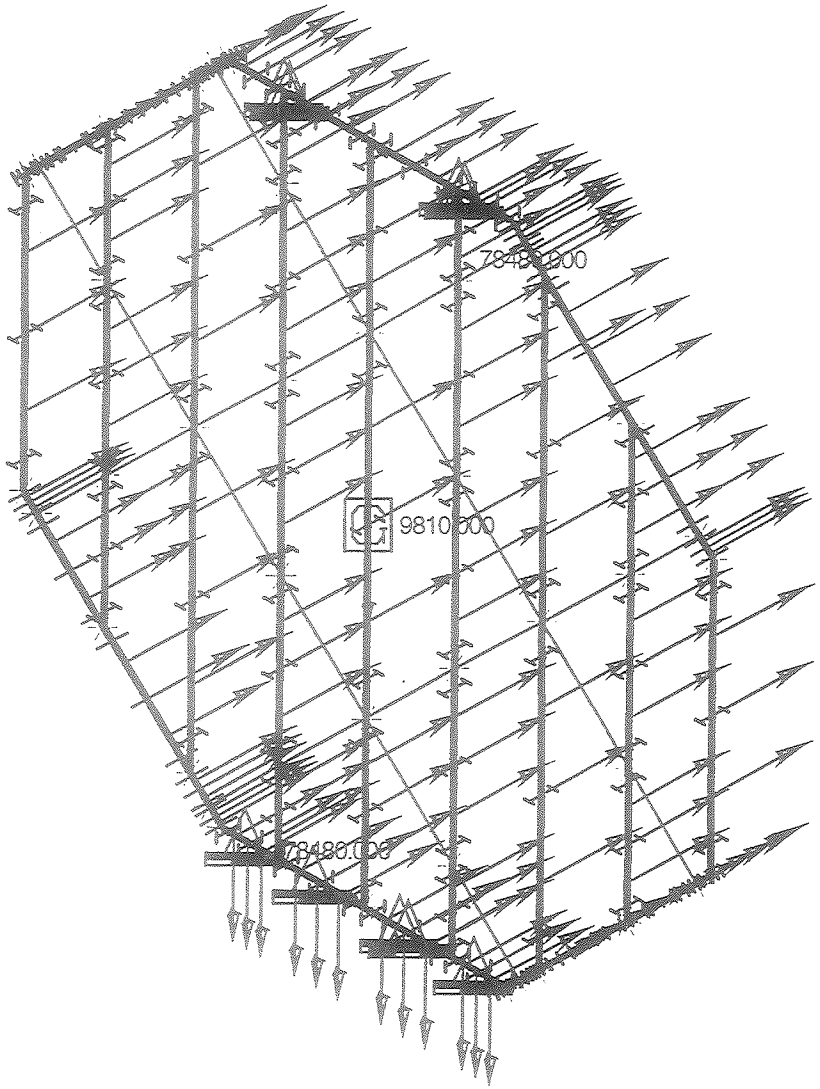

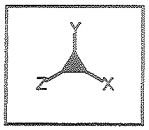

Pro/MECHANICA
Release 18
09/17/97 - 11:52

W10x25 beams / 2.9 metric tons
Review original model stmgbck.ibeam
stmgbck_vert10/study.ds stmgbck10

PARAMETRIC
TECHNOLOGY
CORPORATION

Stress Von Mises (Maximum)
Max +9.7160E+01
Min +0.0000E+00
Deformed Original Model
Scale 2.5000E+01
Load: Combination

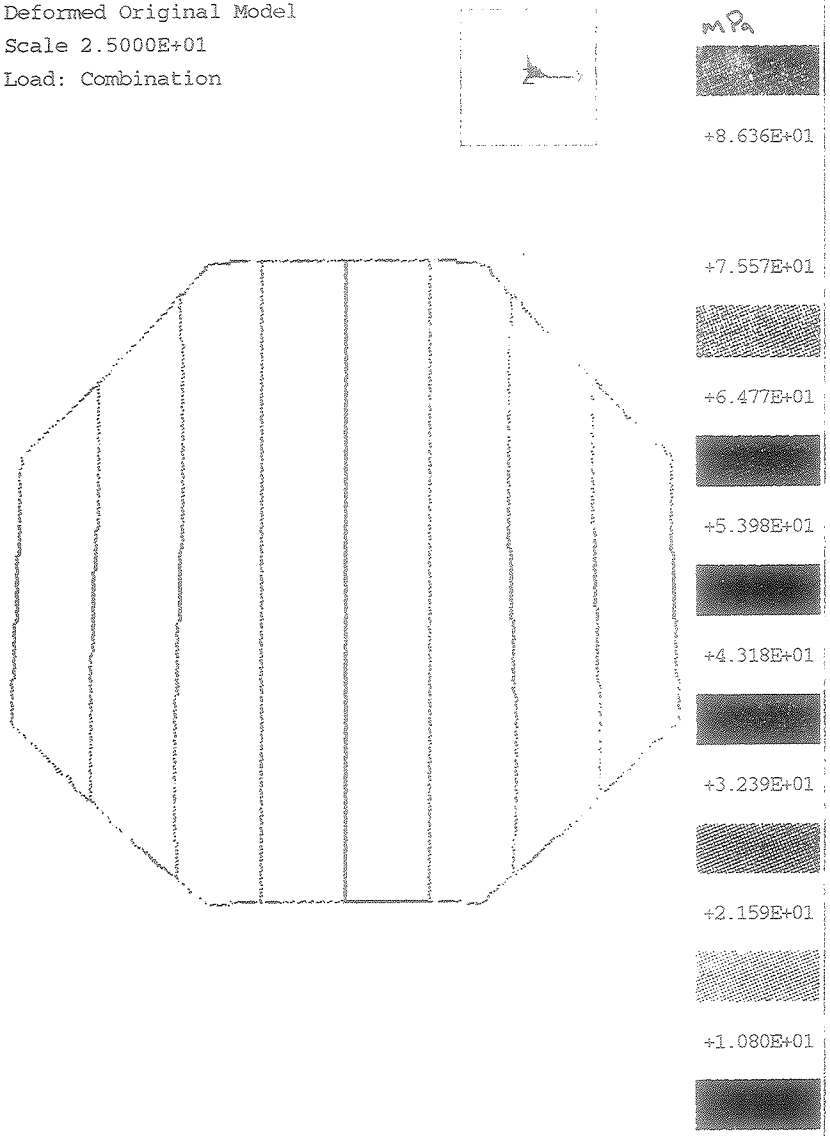

W10x25 Ibeam strongback vertical lift

Displacement Mag
Max +4.3077E+00
Min +0.0000E+00
Deformed Original Model
Scale 2.5000E+01
Load: Combination

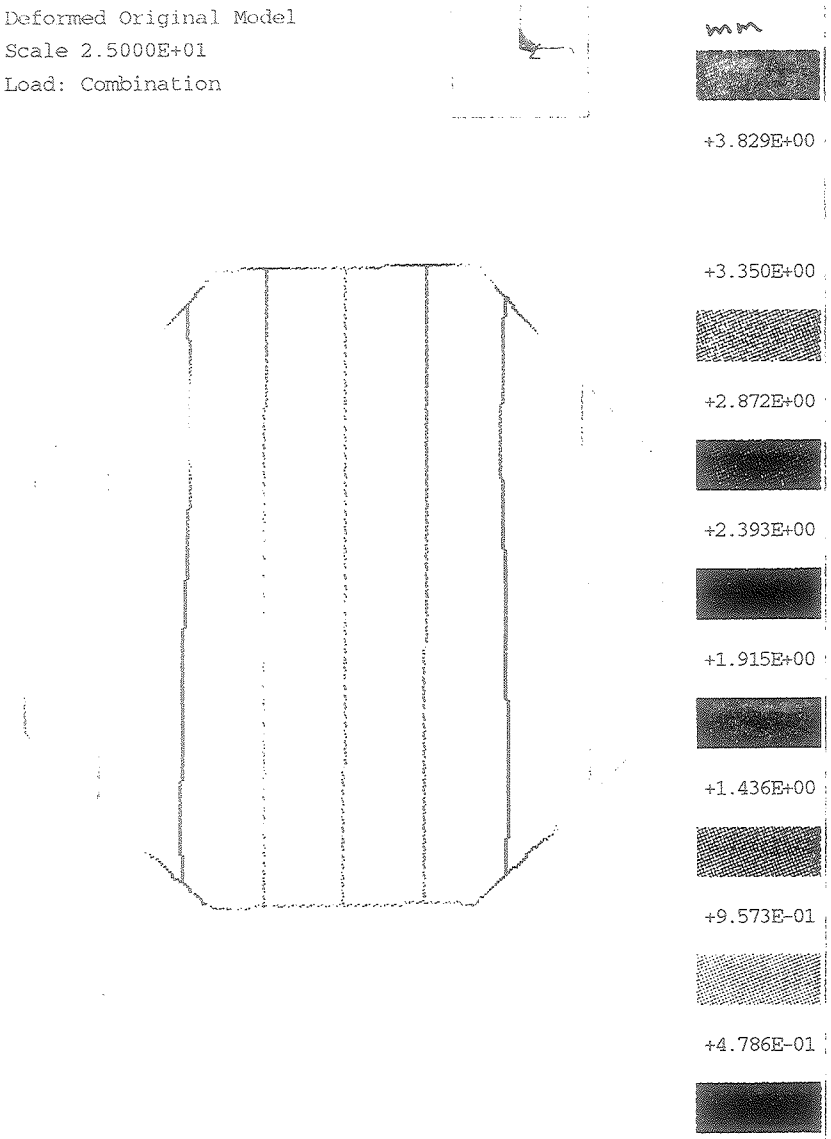

W10x25 Ibeam strongback vertical lift

Displacement Mag
Max +5.4310E+02
Min +0.0000E+00
Deformed Original Model
Scale 1.4512E+00
Load: Combination

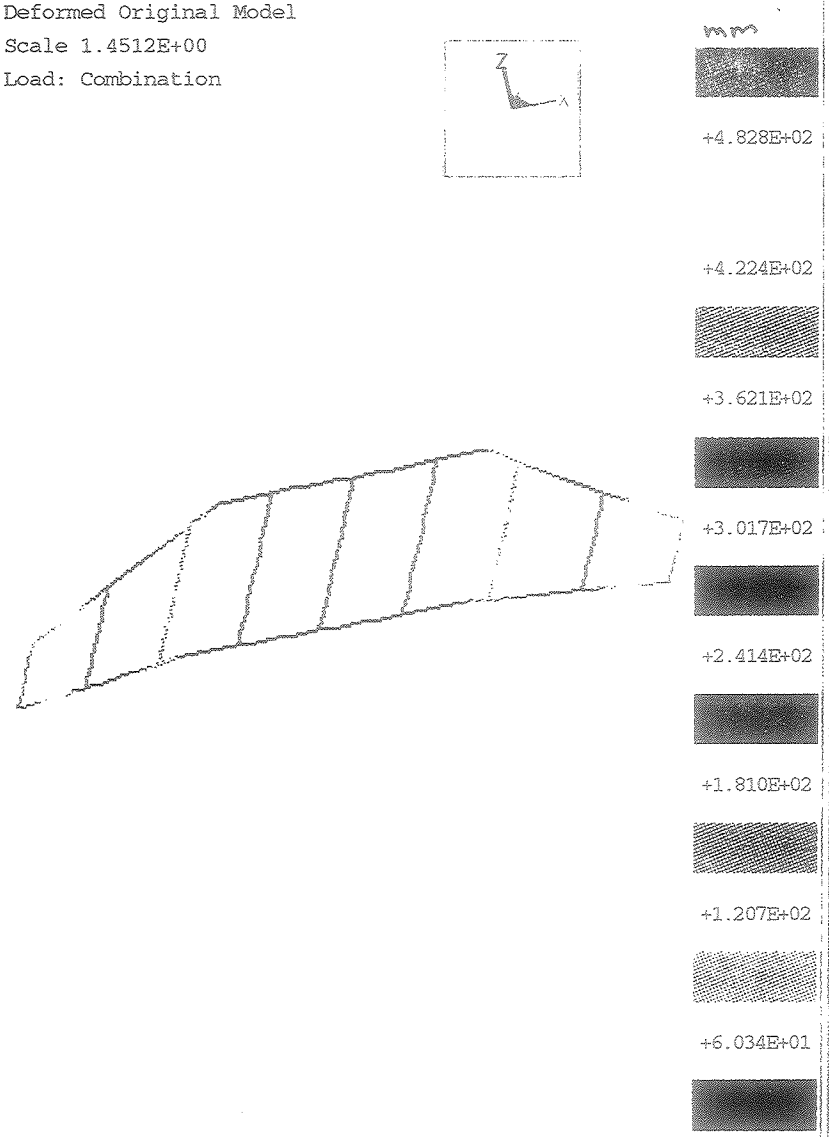

Horz load with plates W10x25 Ibeams

Stress Von Mises (Maximum)
Max +1.0500E+03
Min +4.8572E-02
Deformed Original Model
Scale 1.4512E+00
Load: Combination

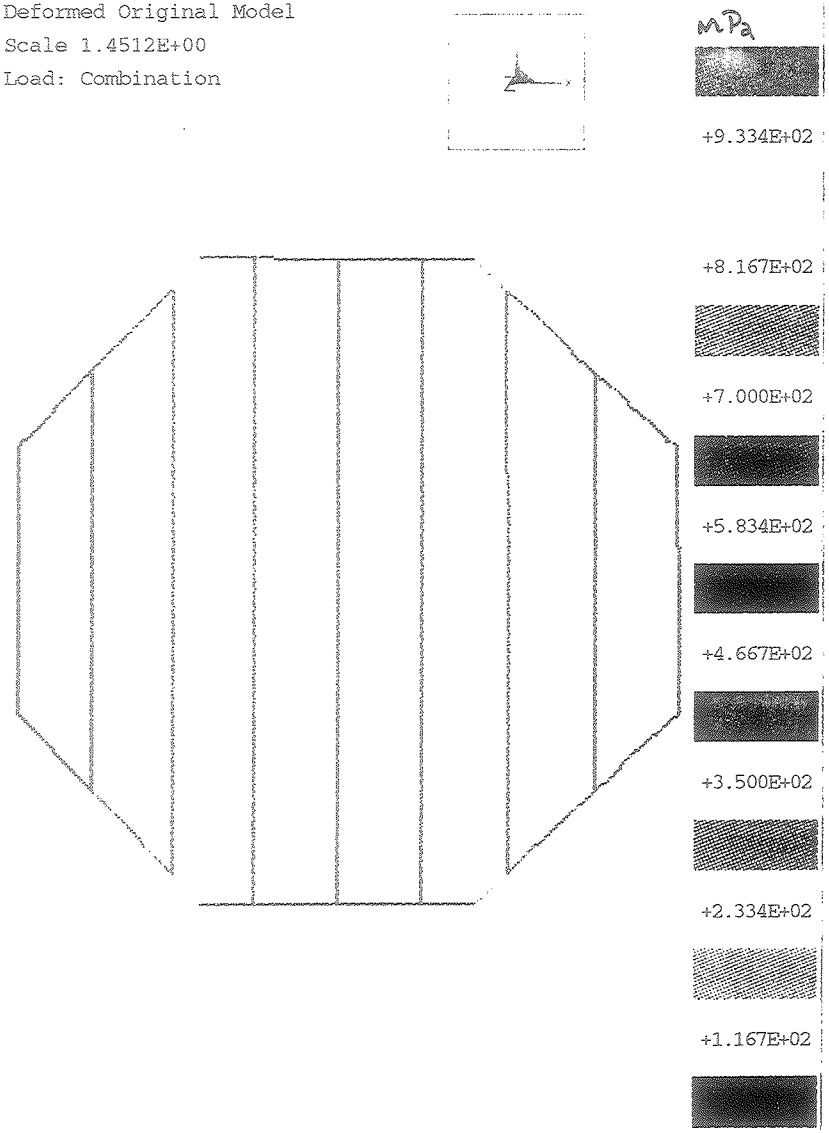

Horz load with plates W10x25 Ibeams

STRONGBACK PLATE SUPPORT VGN 7/28/97

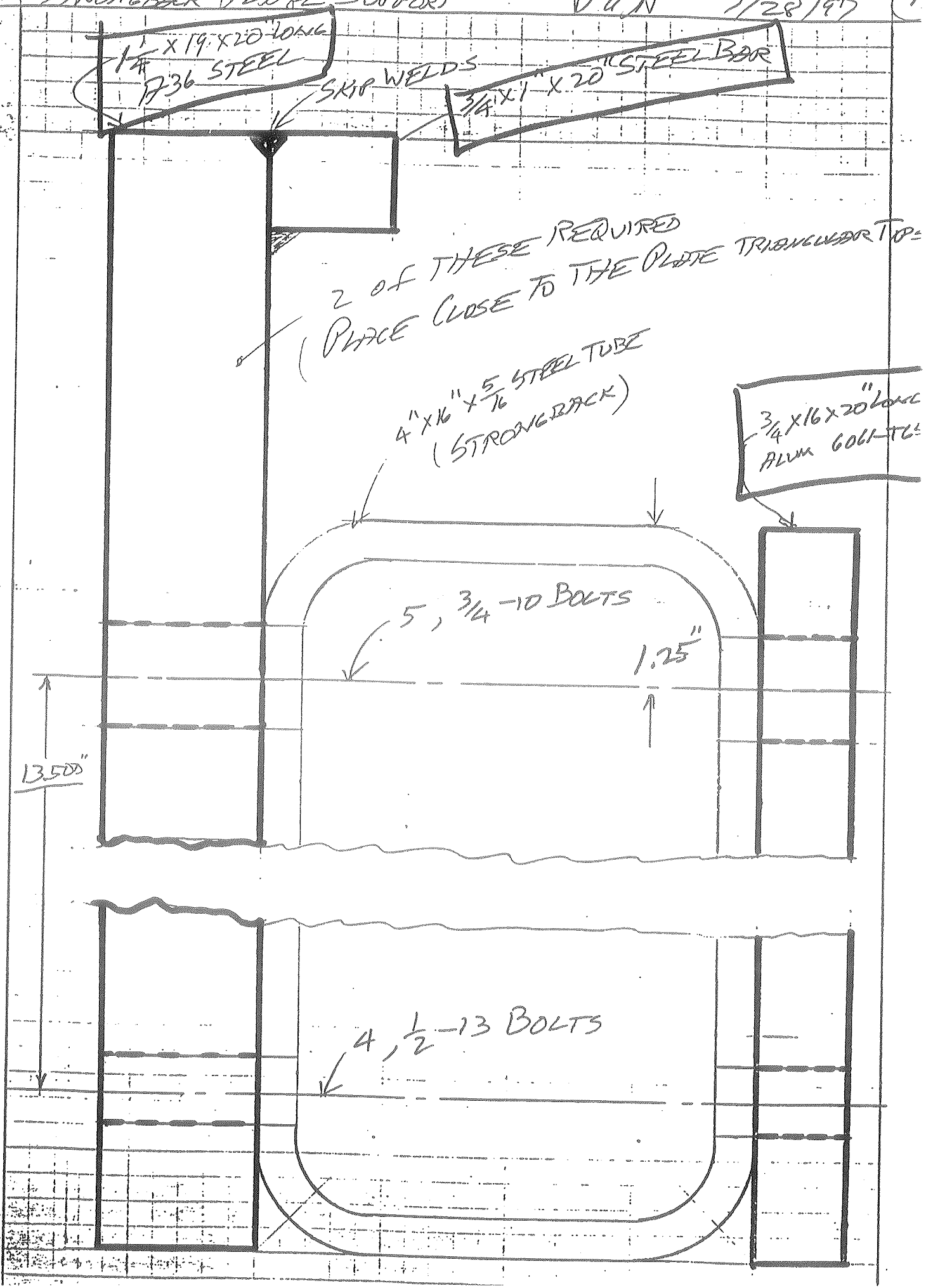

LAWRENCE LIVERMORE LABORATORY - UNIVERSITY OF CALIFORNIA

ENGINEERING NOTE

FILE NO.

PAGE 1/1

SUBJECT STRONG BACK SUPPORT PLATE

NAME T. LADRAN.

1 1/4" x 19" x 20" LONG A36 STL.

DATE

2 req'd

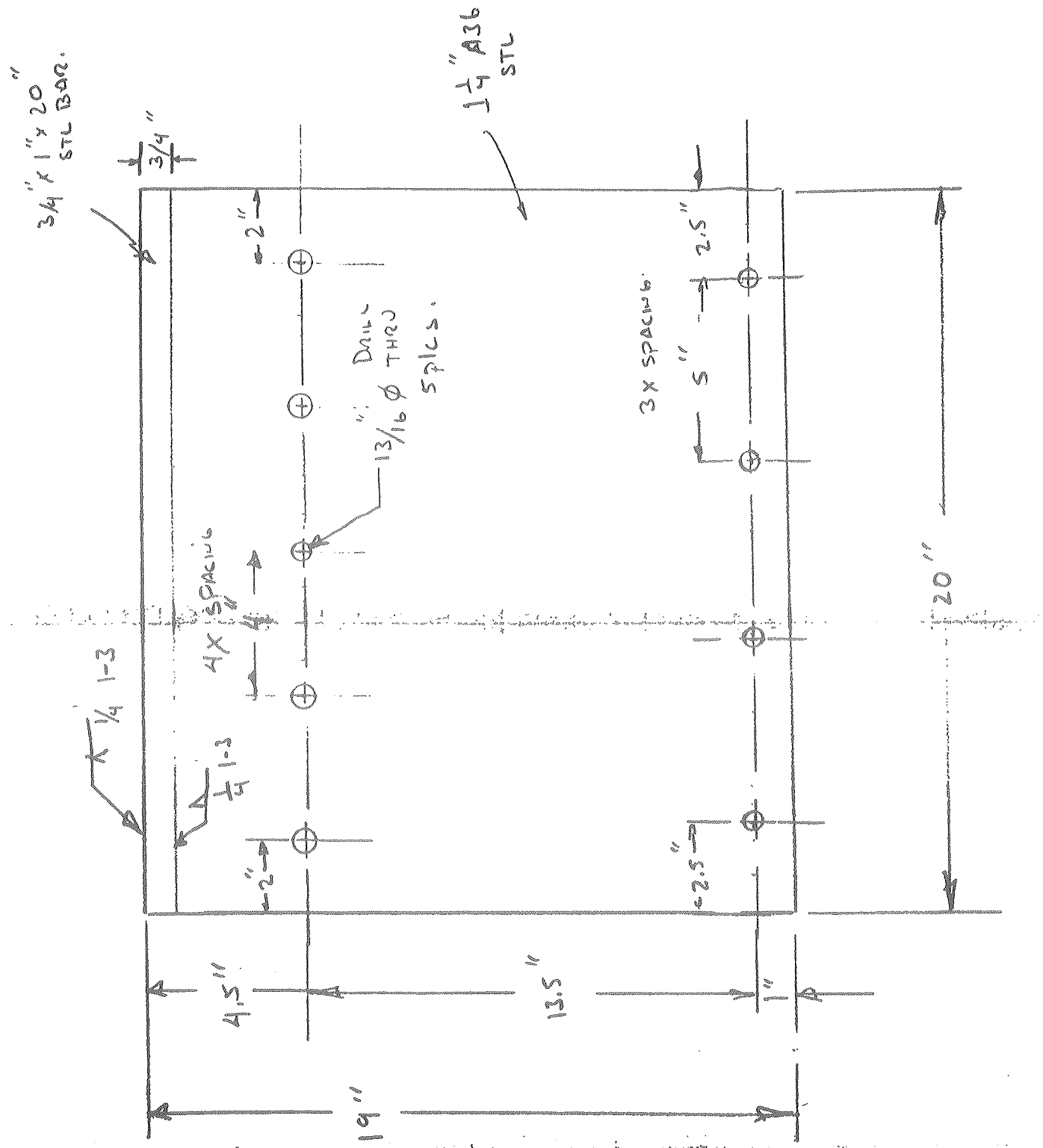

2 req'd

3/4" x 16" x 20" LONG SPACER MATCH BOLT PATTERN.

AL ALLOY

DIETERICH POST RE...DER NO 144953

PLATE RETAINER CLIPS 7/29/97 (1C

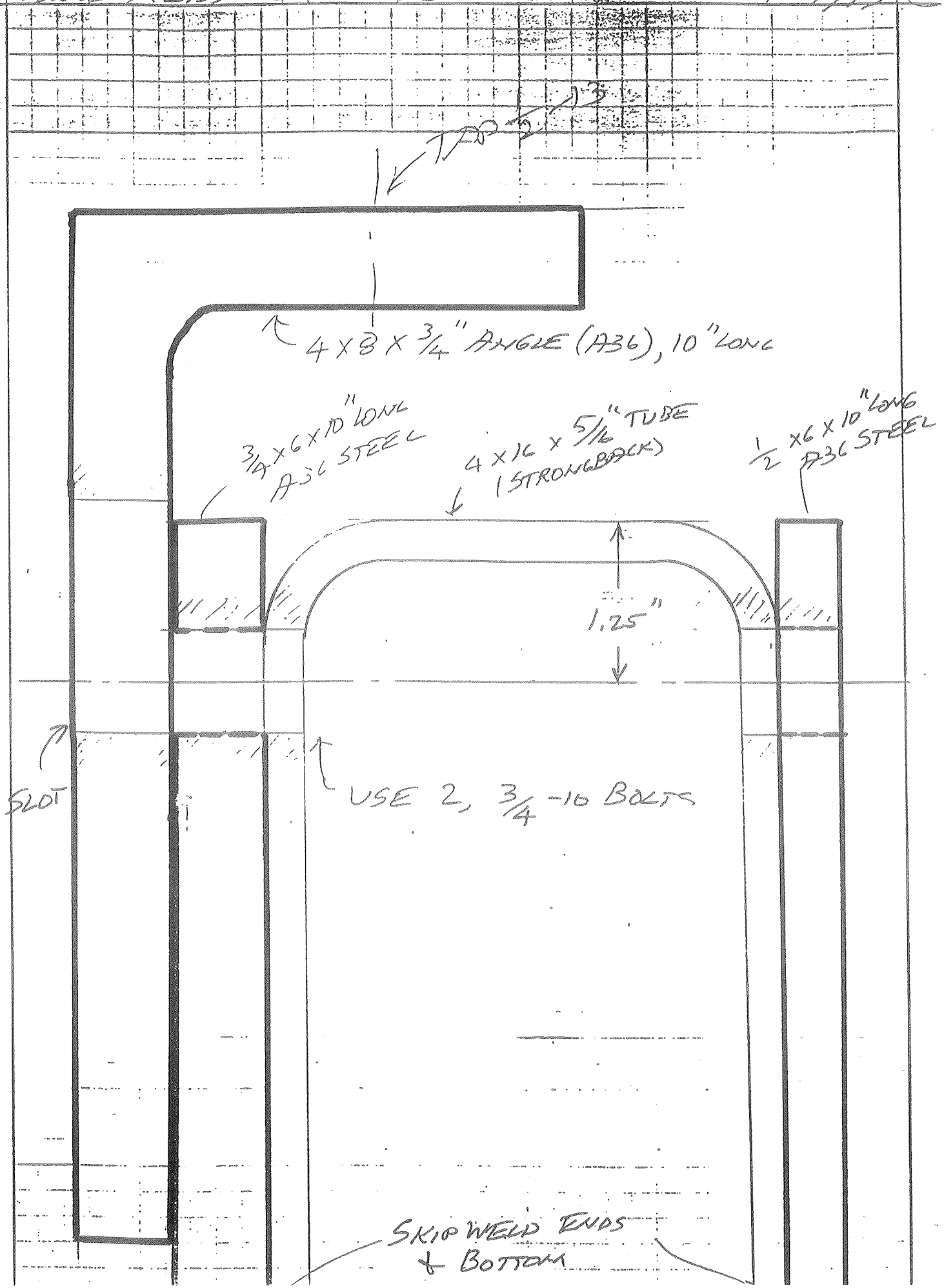

LAWRENCE LIVERMORE LABORATORY - UNIVERSITY OF CALIFORNIA

ENGINEERING NOTE

FILE NO.

PAGE 1/2

SUBJECT PLATE RETAINER CLIP

NAME T. LADRAN.

4 x 3 x 3/4" ANGLE 10" LONG

DATE

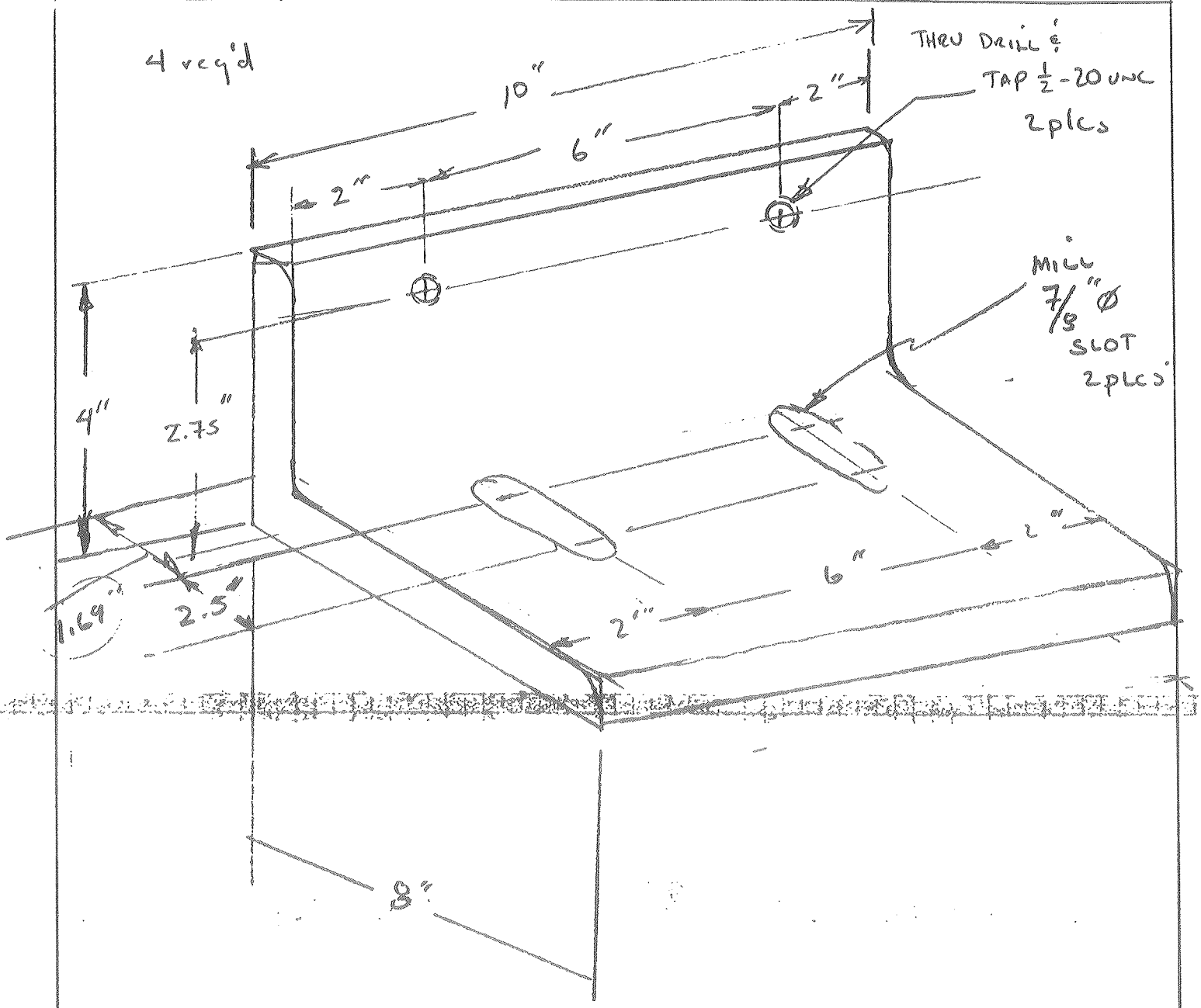

DIETERICH POST R. JER NO 144953

LAWRENCE LIVERMORE LABORATORY - UNIVERSITY OF CALIFORNIA

ENGINEERING NOTE

SUBJECT: PLATE RETAINER CLIPS	FILE NO.	PAGE 2/2.
	NAME: T. LADRAN.	
	DATE	

4 req'd 3/4" x 6" x 10" long A36 STEEL.

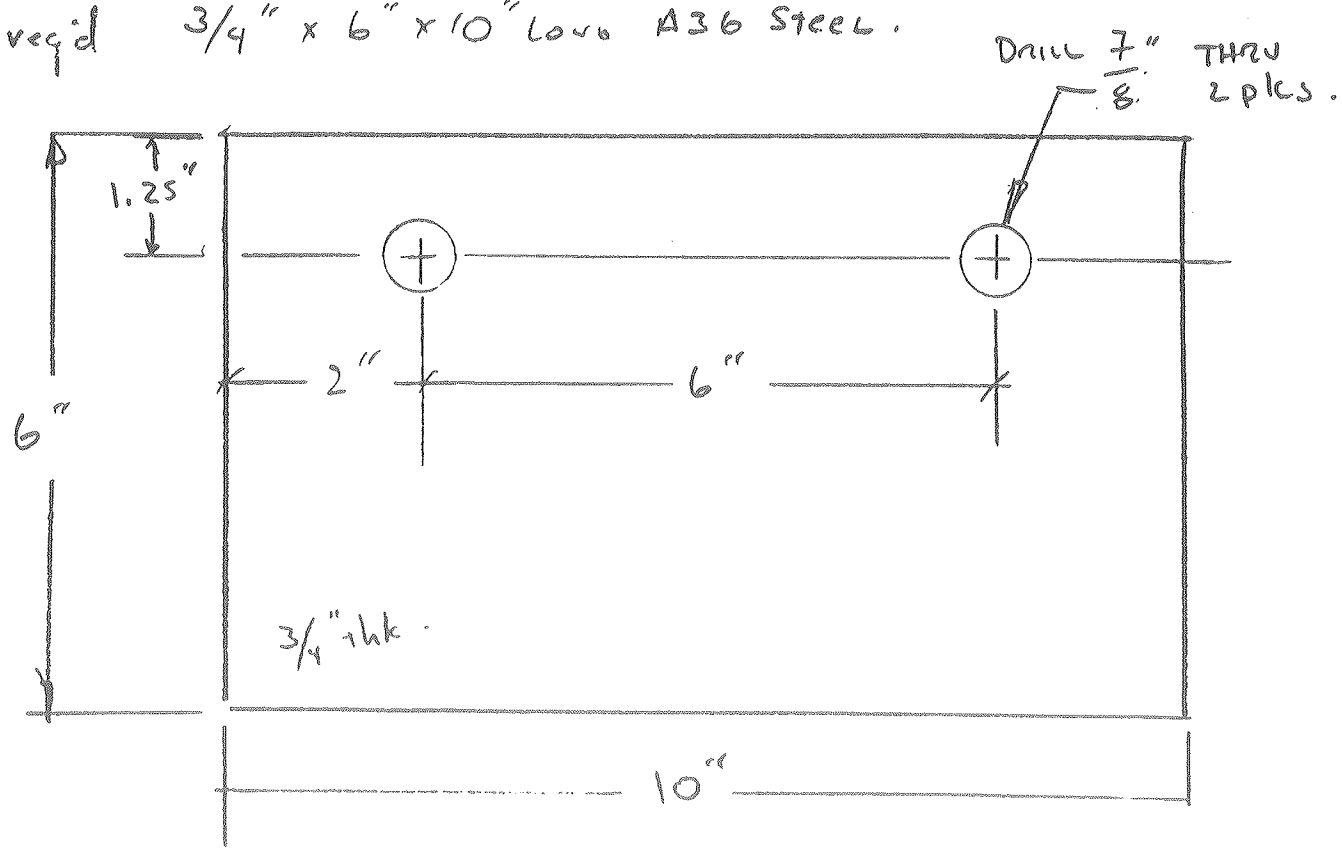

4 req'd
1/2" x 6" x 10"
A-36 steel

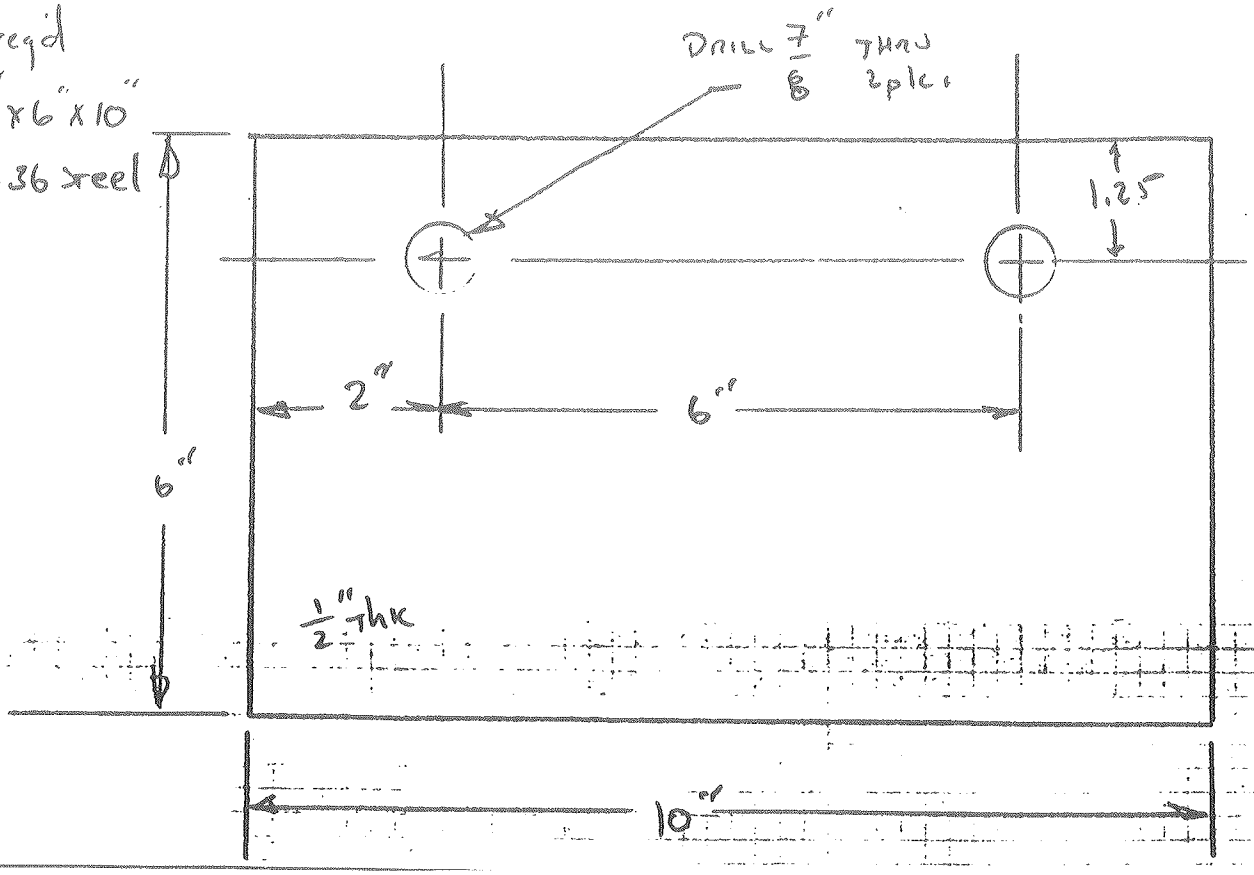

DIETERICH POST RL...DER NO. 144953

MINOS – "EAR" RETAINER CLIPS | GAH 7/28/97 | 9

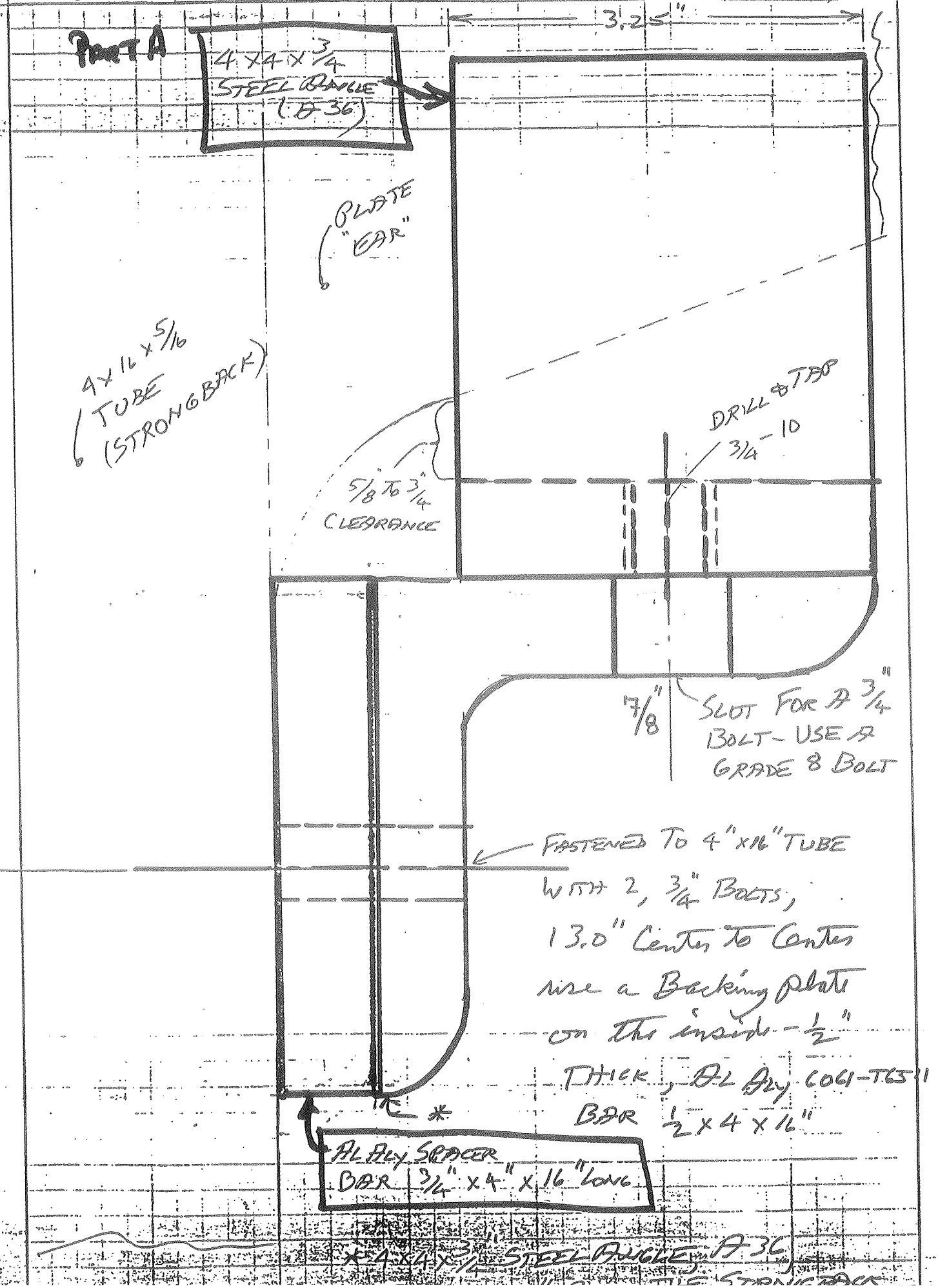

LAWRENCE LIVERMORE LABORATORY - UNIVERSITY OF CALIFORNIA

ENGINEERING NOTE

FILE NO.

PAGE 1/3

SUBJECT: MINOS EAR RETAINER CLIP

NAME: T. LADRAN

3.5" STEEL ANGLE

DATE

2 each Req'd 4" x 4" x 3/4" STEEL ANGLE A-36 Part # A

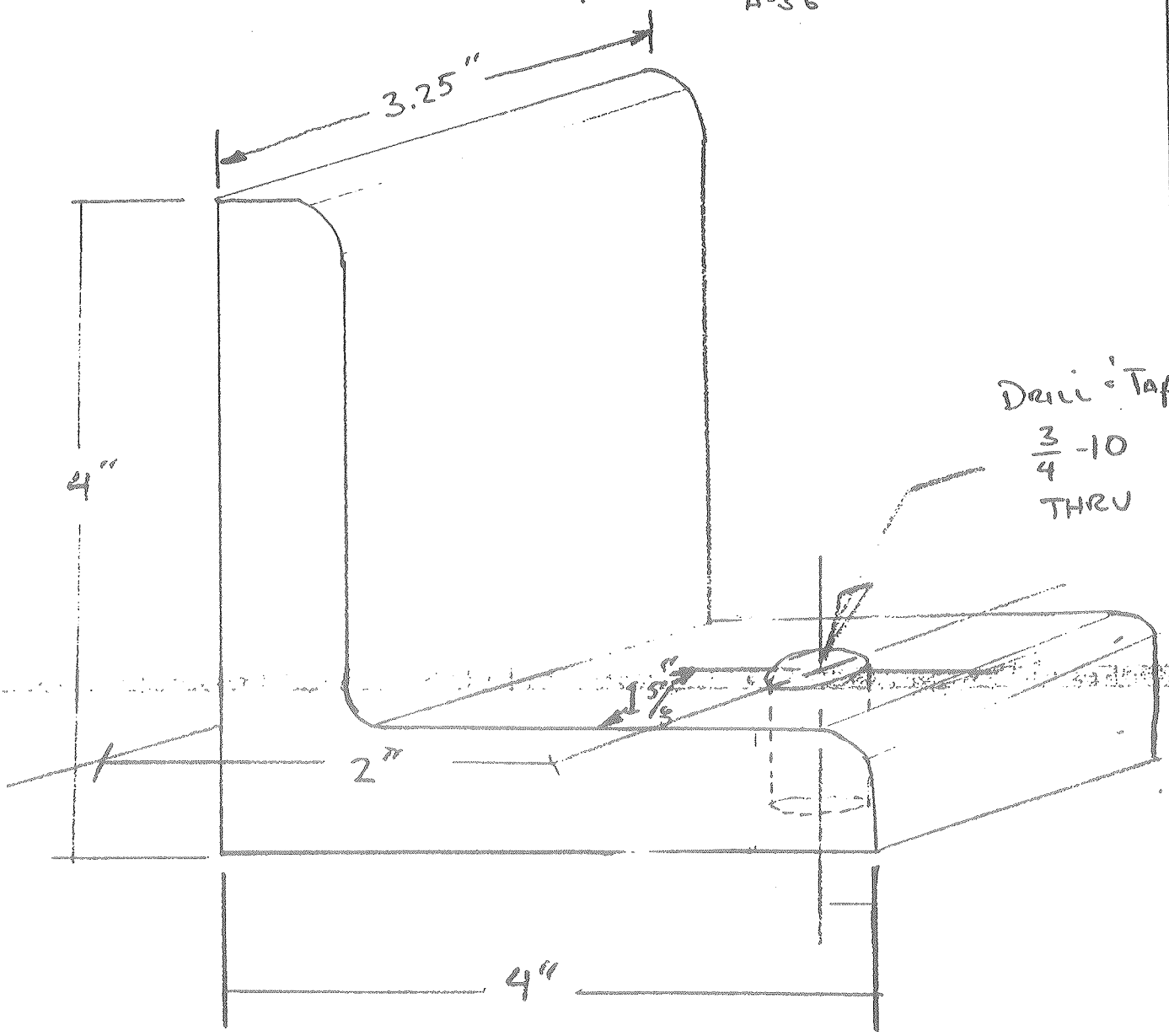

DIETERICH POST ... IDER NO 144953

LAWRENCE LIVERMORE LABORATORY - UNIVERSITY OF CALIFORNIA

ENGINEERING NOTE

FILE NO.

PAGE 2/3

SUBJECT: MINOS FAR RETAINER CLIP

NAME: T. LADRAW

18" STEEL ANGLE

DATE

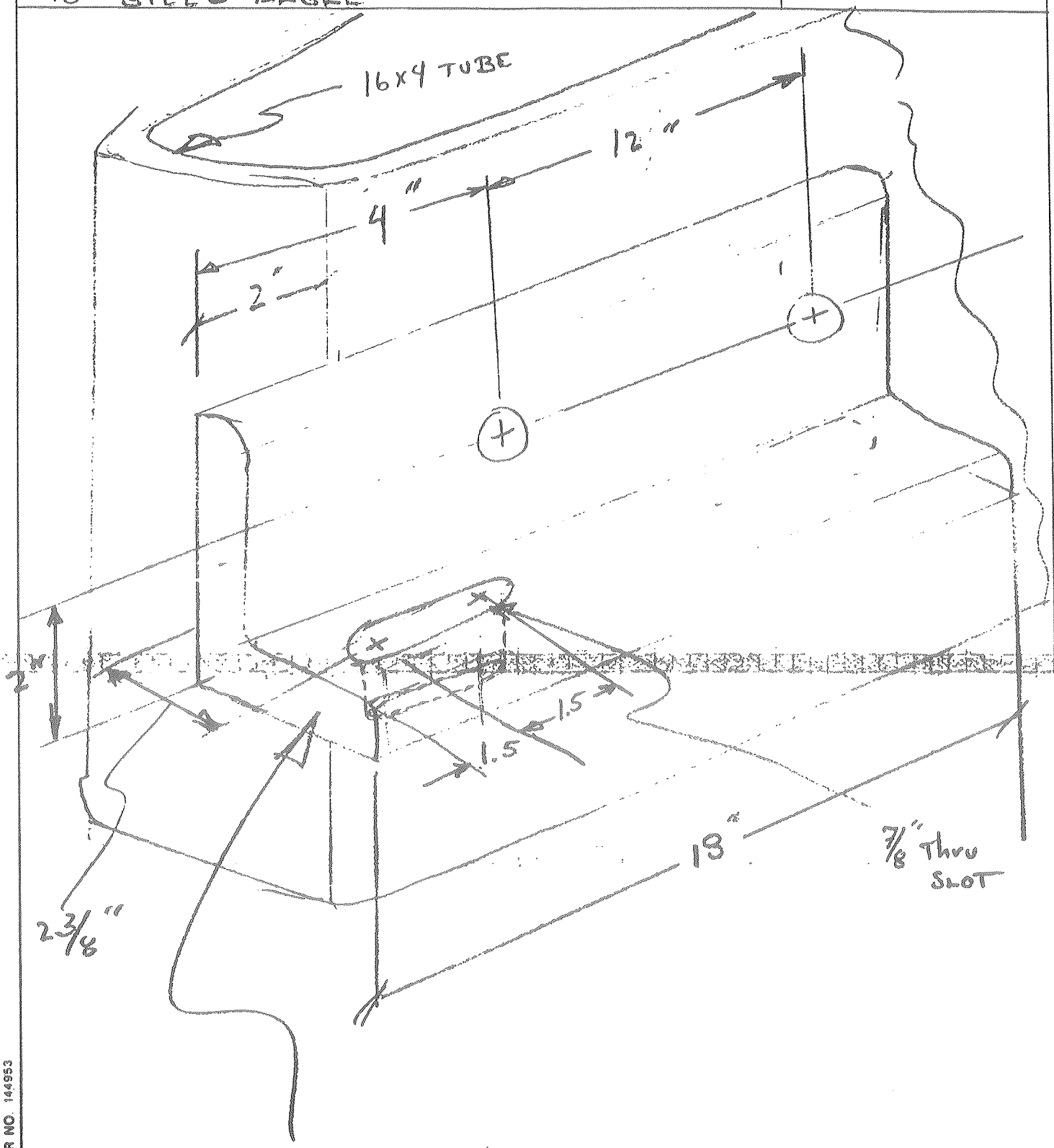

2 each Reqd 4 x 4 x 3/4" 16" LONG

L-ANGLE

MAT'L A36

DIETERICH POST RENDER NO. 144953

LAWRENCE LIVERMORE LABORATORY - UNIVERSITY OF CALIFORNIA

ENGINEERING NOTE

FILE NO.

PAGE 3/3

SUBJECT MINOS EAR RETAINER CLIP

SPACER PLATE

NAME

DATE

2 req'd 3/4" x 4" x 16" LONG

MAT'L AL ALLOY

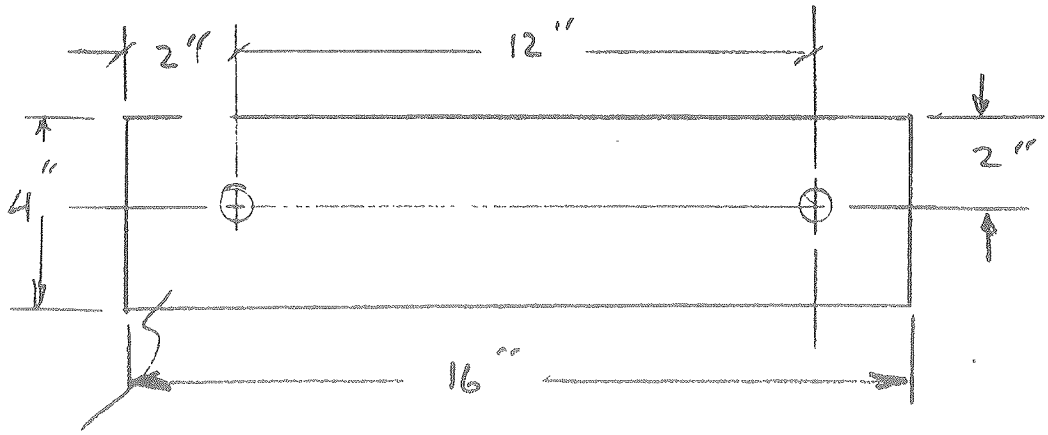

3/4" SPACER PLATE

DIETERICH POST R. ...DER NO 144953

RETAINER CLIPS – WINDS STRONGBACK 7/28/97 CE

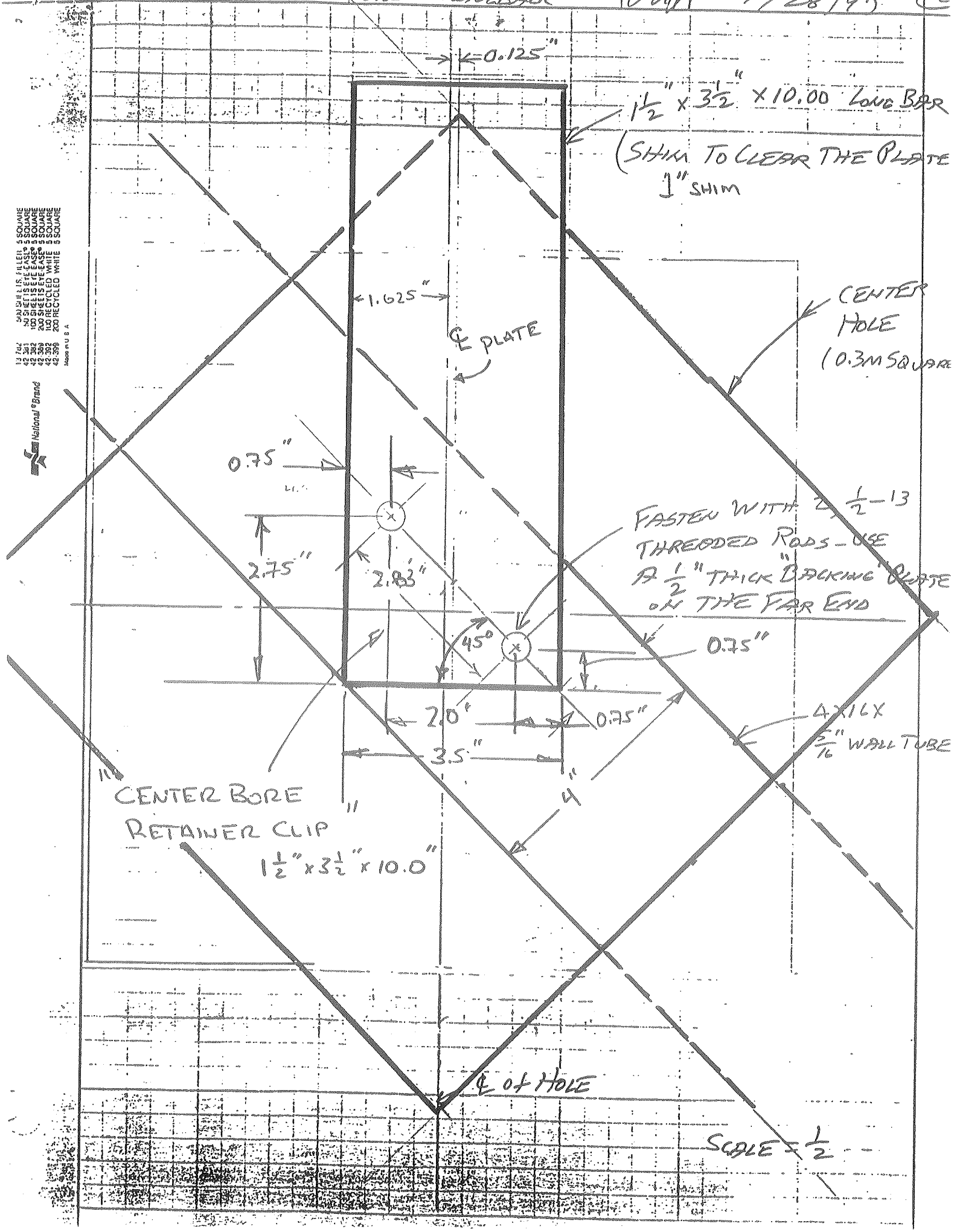

LAWRENCE LIVERMORE LABORATORY - UNIVERSITY OF CALIFORNIA

ENGINEERING NOTE

SUBJECT: CENTER BORE RETAINER CLIP	NAME: T. LADRAU	FILE NO. / PAGE
	DATE	

1 req'd 1 1/2" x 3 1/2" x 10" LONG BAR. 4 3 6 STL.

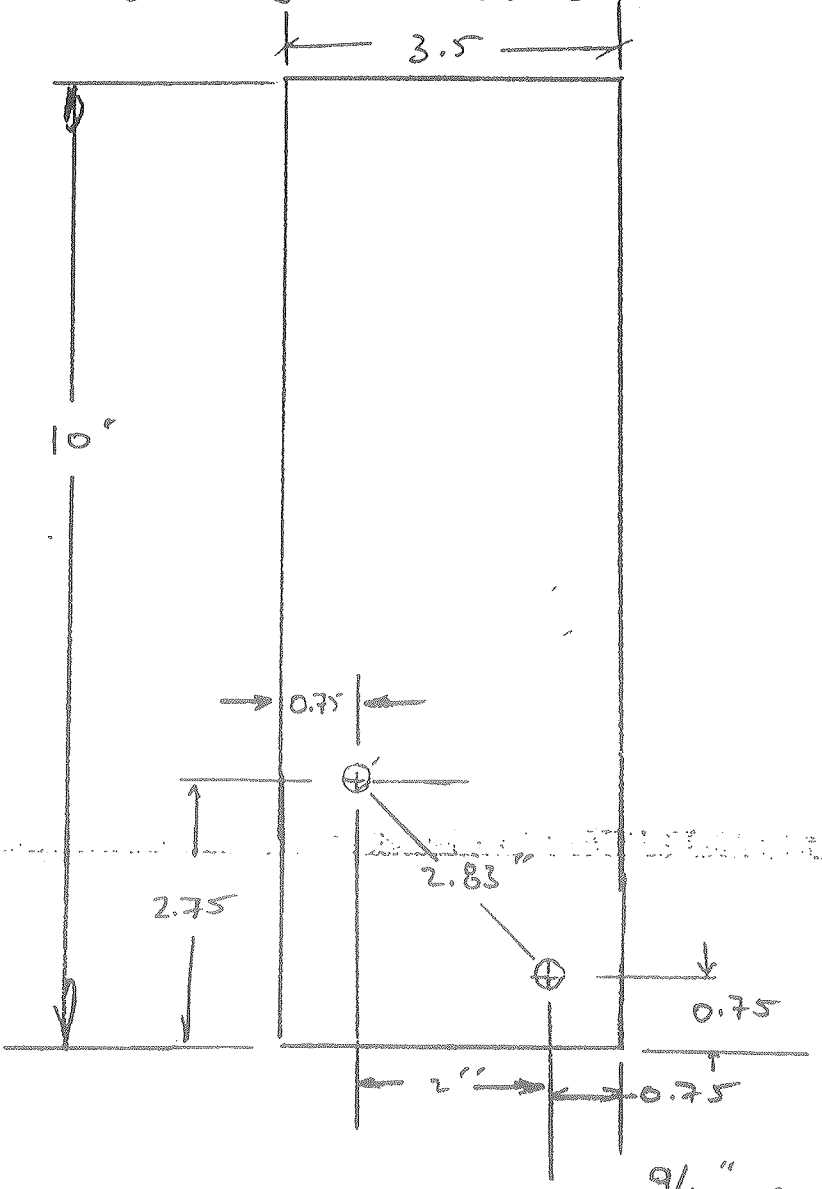

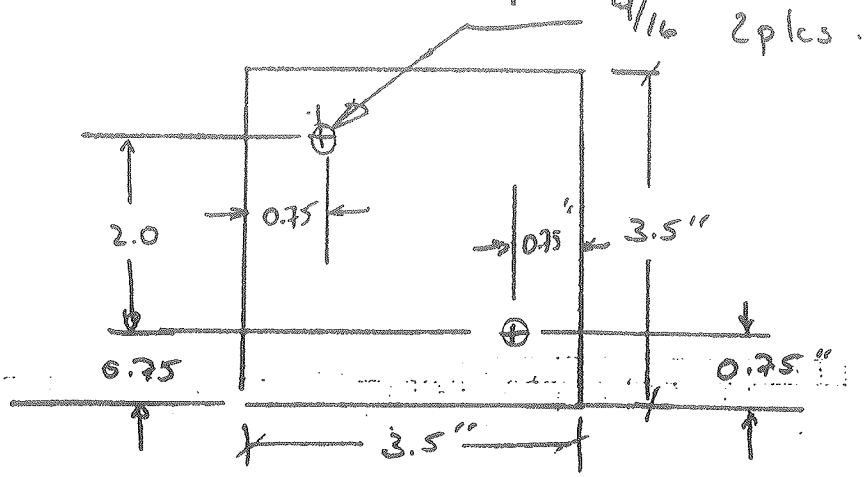

1 req'd 1/2" AL BACKING PLATE

DIETERICH POS. ORDER NO. 149953

7600-54257 LL 298 (REV. 8/71)

LAWRENCE LIVERMORE LABORATORY - UNIVERSITY OF CALIFORNIA

ENGINEERING NOTE

FILE NO.

PAGE

SUBJECT

LOADS ON CLIP ANGLES

NAME ALAIN INUGAI

DATE

OBJECTIVE: TO DESIGN FEASIBLE CLIP ANGLES FOR THE VARIOUS LOADING POSITIONS THE MINOS STRONGBACK WILL ENCOUNTER.

DESIGN CRITERIA

1. DESIGN LOAD = DEAD LOAD + SEISMIC LOAD

2. ALLOWABLE STRESS IN STEEL (AISC CODE)
   $F_y = 36$ ksi

3. SEISMIC LOAD
   USE NORMALIZED RESPONSE SPECTRA IN TABLE 2 OF SECTION 5.2 OF DESIGN SAFETY STANDARDS WITH A DAMPING OF 5% OF CRITICAL DAMPING. HORIZONTAL & VERTICAL ACCELERATION 0.47 g WITH ACCELERATION OF 2.12 FOR 0.9964 g

LL-398-2 (REV. 1)

LAWRENCE LIVERMORE LABORATORY - UNIVERSITY OF CALIFORNIA

ENGINEERING NOTE

SUBJECT	FILE NO.	PAGE
	NAME ALAIN INUGAI	
	DATE	

DETERMINE LOADS ON CLIP ANGLES

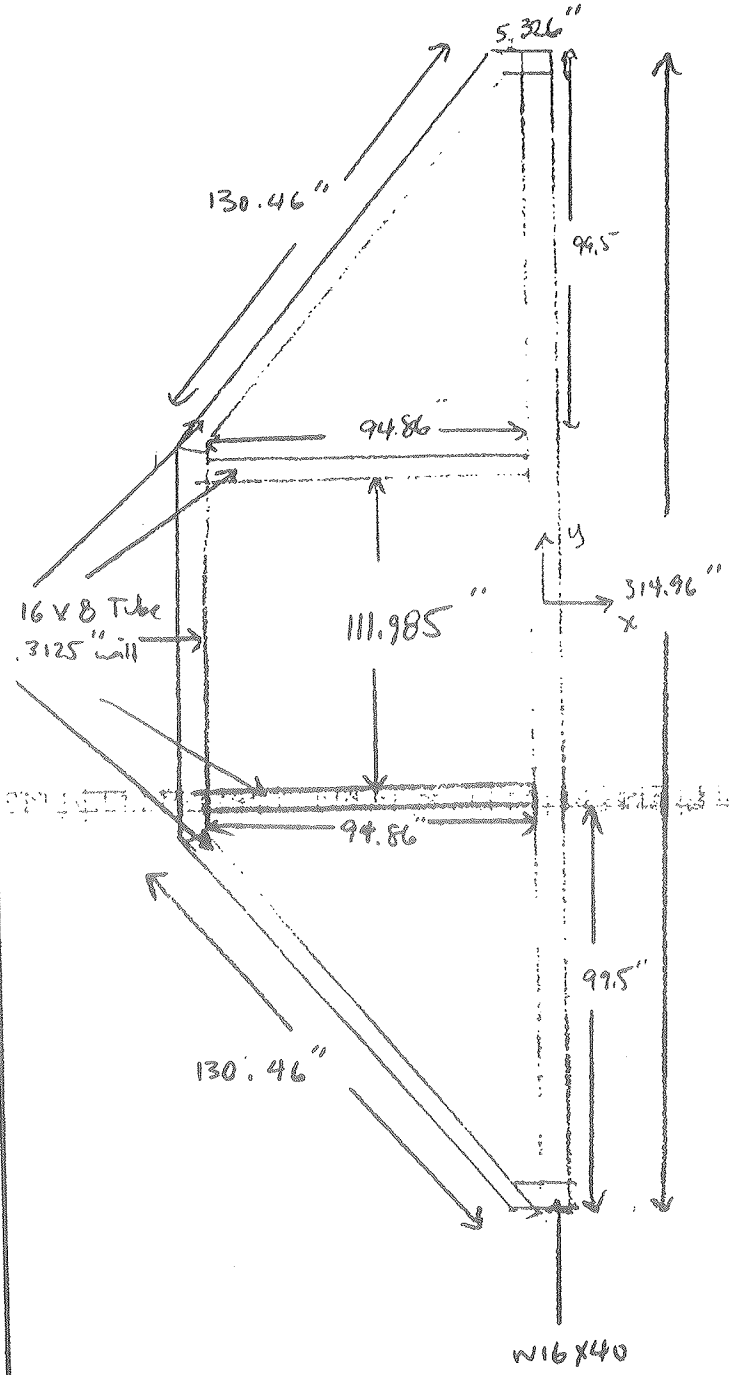

W16 X40 40 lbs/ft

16x8 Tube 48.86 lbs/ft

We will look at all of the weight of the plates and beams as acting at the centroid.

LL-398-2 (REV. 10/.

LAWRENCE LIVERMORE LABORATORY - UNIVERSITY OF CALIFORNIA

ENGINEERING NOTE

FILE NO.

PAGE

SUBJECT

NAME ALAIN INUGAI

DATE

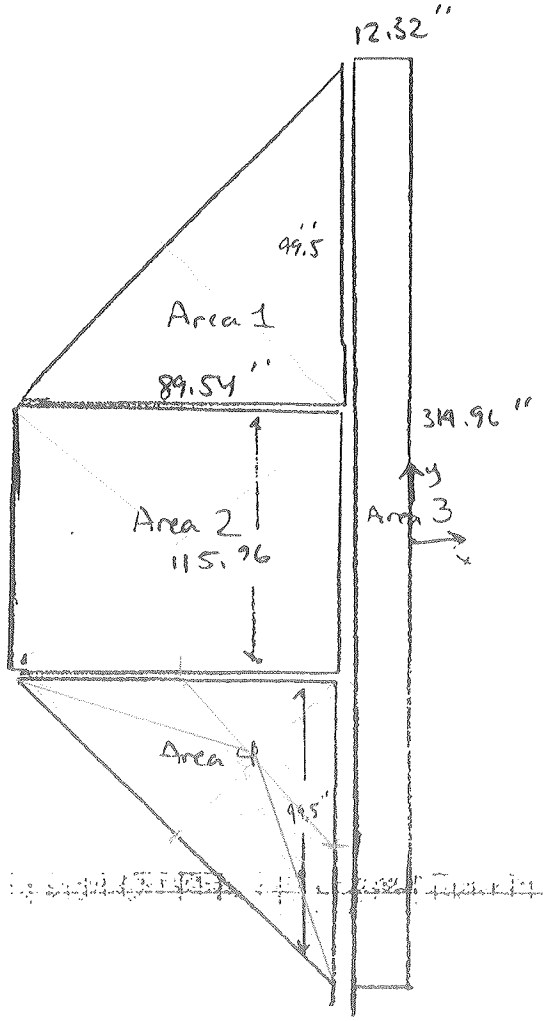

Goal Find plate centroid & weight.

$\bar{y} = 0$ as it is symmetric about the x-axis.

	Area (in²)	$\bar{x}$ (in)	$\bar{x}A$ (in³)
Area 1	4454.6	42.17	187850
Area 2	10383.1	57.09	592769
Area 3	3880.3	6.16	23903
Area 4	4454.6	42.17	187850
	23177.6		992372

$$\bar{x} = \frac{\Sigma \bar{x} A}{\Sigma A} = \frac{992372}{23177.6} = 42.825''$$

$$\text{Weight} = 3/4'' \times \Sigma A \times .283\ \text{lb/in}^3 = 4918\ \text{lbs}$$

LL-398-2 (REV. 10)

LAWRENCE LIVERMORE LABORATORY - UNIVERSITY OF CALIFORNIA

ENGINEERING NOTE

FILE NO.

PAGE

SUBJECT

NAME ALAIN INUGAI

DATE

GOAL:

FIND THE BEAM WEIGHT & CENTROIDS

W16X40 40 lb/ft

16X8 Tube 5/16 wall 48.81 lb/ft

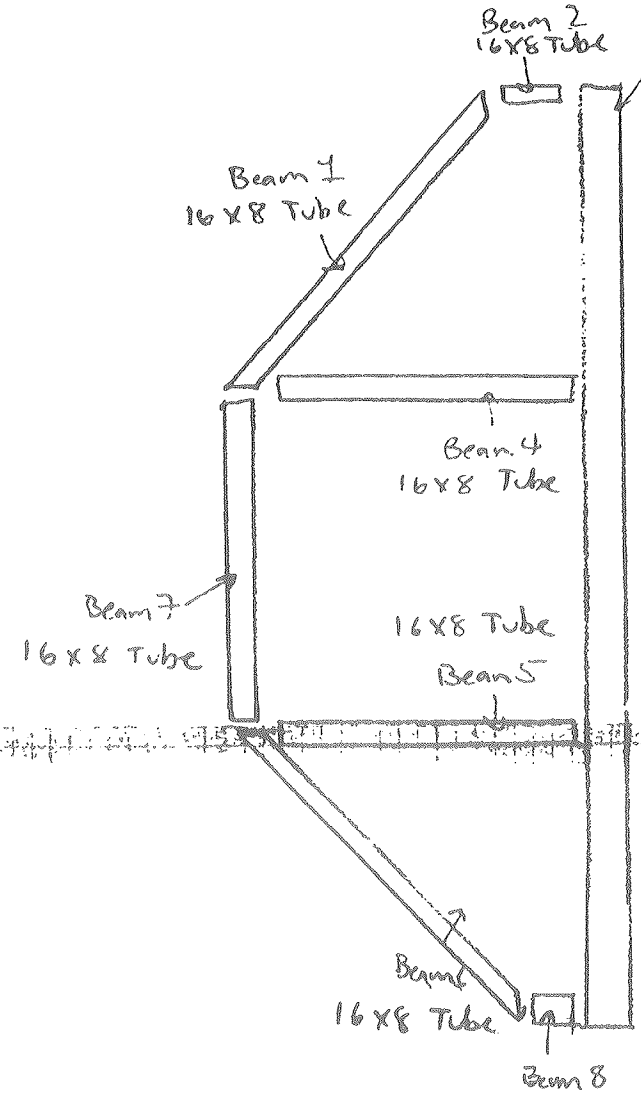

	Length	$\bar{x}$	Weight
Beam 1	130.46"	58.45"	531 lb
Beam 2	5.326"	2.66"	22 lb
Beam 3	314.96"	3.50"	1050 lb
Beam 4	94.86"	50.93"	386 lb
Beam 5	94.86"	50.93"	386 lb
Beam 6	130.46"	58.45"	531 lb
Beam 7	130.46"	102.36"	531 lb
Beam 8	5.326"	2.66"	22 lb
			2409 lb

$$\bar{x} = \frac{\Sigma(\bar{x}\ \text{Weight})}{\text{Weight}} = \frac{155862\ \text{lb-in}}{2409\ \text{lb}} = 64.70''$$

GOAL FIND TOTAL CENTROID

	$\bar{x}$	$\bar{y}$	Weight
BEAM CENTROID	64.70"	0"	2409 lb
PLATE CENTROID	42.825"	0"	4918 lb
			7327 lb

$$\text{TOTAL } \bar{x} = \frac{\Sigma(\bar{x}\ \text{Weight})}{\text{Weight}} = \frac{366476\ \text{lb-in}}{7327\ \text{lb}} = 50.02''$$

$$\text{TOTAL } \bar{y} = 0$$

LL-398-2 (REV. 10/.

LAWRENCE LIVERMORE LABORATORY - UNIVERSITY OF CALIFORNIA

ENGINEERING NOTE

SUBJECT	FILE NO.	PAGE
	NAME ALAIN INUGAI	
	DATE	

TO DESIGN THE CLIP ANGLES WE WILL ASSUME THE MOMENT IS SHARED BETWEEN THE FOUR I BEAM JOINTS EQUALLY WITH 1/2 ON EACH BRACKET. USING A BRACE WE LIMIT R (MOMENT ARM)

CLIP DEPTH
$b = 10''$

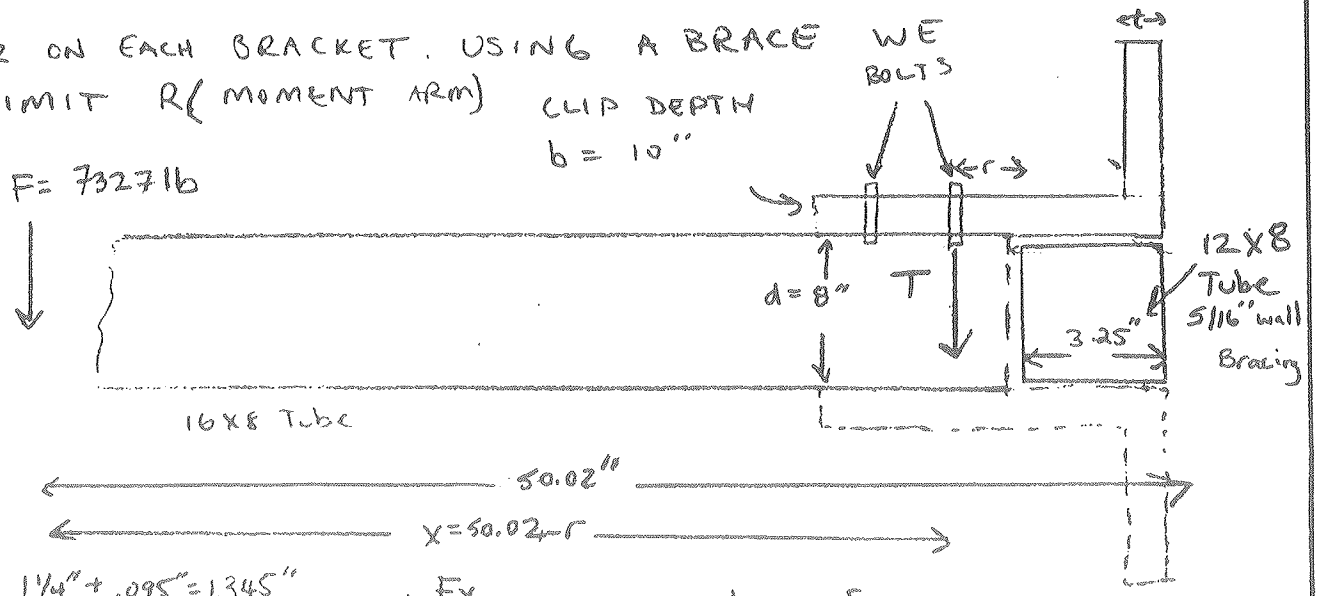

$r = 1\tfrac{1}{4}'' + .095'' = 1.345''$
$t = 0.75''$
$x = 45.425''$

$T = k\dfrac{Fx}{d}$ $\quad$ k = portion of moment carried (1/8)

$$\sigma_{\text{CLIP ANGLE}} = \frac{mc}{I} + \frac{F}{A}$$

$m = Tr$
$c = t/2$
$I = \dfrac{bt^3}{12}$
$A = bt$

$$= \frac{\dfrac{kFxr}{d}\dfrac{t}{2}}{\dfrac{bt^3}{12}} + \frac{F}{bt}$$

$$= \frac{6kFxr}{dbt^2} + \frac{F}{bt}$$

$$= \frac{6\,(1/8)\,(7327\text{ lb})(45.425'')(1.345'')}{8''\,(10'')\,(0.75'')^2} + \frac{7327\text{ lb}}{10''\,(.75'')}$$

$$= 8438 \text{ psi}$$

$\sigma_{allow} = 12000$ psi w/ SF 3.0

$$SF = \frac{36000\text{ psi}}{8438\text{ psi}} = 4.3 > 3.0 \checkmark$$

LL-398-2 (REV. 1.

LAWRENCE LIVERMORE LABORATORY - UNIVERSITY OF CALIFORNIA

ENGINEERING NOTE

SUBJECT	FILE NO.	PAGE
	NAME ALAIN INUGAI	
	DATE	

SEISMIC LOADING

WE HAVE THE FOLLOWING FORCES.

VERTICAL $= 1g + .47(2.12)g = 1.996g$

HORIZONTAL $= 0.47(2.12)g = 0.996g$

$F_V = 14628$ lb

$F_H = 7301$ lb

$$\sigma_{CLIP\ ANGLE\ y} = \left(\frac{6K F_V x r}{d b t^2} + \frac{F_V}{bt}\right) = 16846 \text{ psi}$$

$$\sigma_{CLIP\ ANGLE\ x} = \left(\frac{6K F_H x r}{d b^3} + \frac{F_H}{bt}\right) = 1015 \text{ psi}$$

$$\sigma_{CLIP\ ANGLE} = \sqrt{\sigma_{CAx}^2 + \sigma_{CAy}^2} = 16877 \text{ psi}$$

$$\boxed{SF = \frac{F_y}{\sigma_{CLIP\ ANGLE}} = \frac{36000}{16877} = 2.1 > 1.0} \checkmark$$

LL-398-2 (REV. 1)

LAWRENCE LIVERMORE LABORATORY - UNIVERSITY OF CALIFORNIA

ENGINEERING NOTE

SUBJECT

FILE NO.

PAGE

NAME ALAIN INUGAI

DATE

BOLT STRENGTH

WE DIVIDE FORCE EQUALLY AMONG FOUR JOINTS

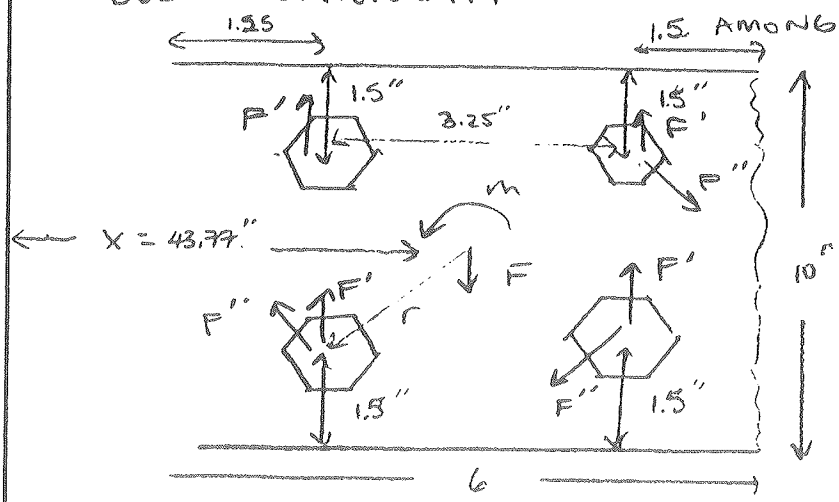

$F = 7327/4 = 1832$ lb

$M = F \times X = 80176$ lb-in

BOLTS 3/4"-10

Tensile Stress Area 0.3318 in²

	psi	lb
Grade 2	57000	18914
Grade 5	92000	30578
Grade 8	130000	43138

$$r = \sqrt{\left(\frac{7}{2}\right)^2 + \left(\frac{3.25}{2}\right)^2}$$

$$= 3.86 \text{ in.}$$

FORCE ON BOLT $= F' + F''$

$$F' = \frac{F}{n} \qquad (n = \#\text{ of Bolts})$$

$$F'' = \frac{M}{4r}$$

$$F' = \frac{1832 \text{ lb}}{4} = 458 \text{ lb}$$

$$F'' = \frac{80176 \text{ lb-in}}{4(3.86 \text{ in})} = 5194 \text{ lb}$$

WORST FORCE ON LEFT TWO BOLTS

$$(5194)^2 = F^2 + 458^2 - 2F(458)\cos 45^\circ$$

$$0 = F^2 - 647.7F - 2.677 \times 10^7$$

$$F = 5508 \text{ lbs}$$

$$\boxed{SF_{Grade\,8} = \frac{43130 \text{ lb}}{5508 \text{ lb}} = 7.8 > 3.0 \checkmark}$$

USE GRADE 8 BOLTS FOR ADDED STRENGTH

FROM SHIGLEY & MISCHKE PG 362-363

LL-398-2 (REV.)

LAWRENCE LIVERMORE LABORATORY - UNIVERSITY OF CALIFORNIA

ENGINEERING NOTE

SUBJECT	FILE NO.	PAGE
	NAME	
	DATE	

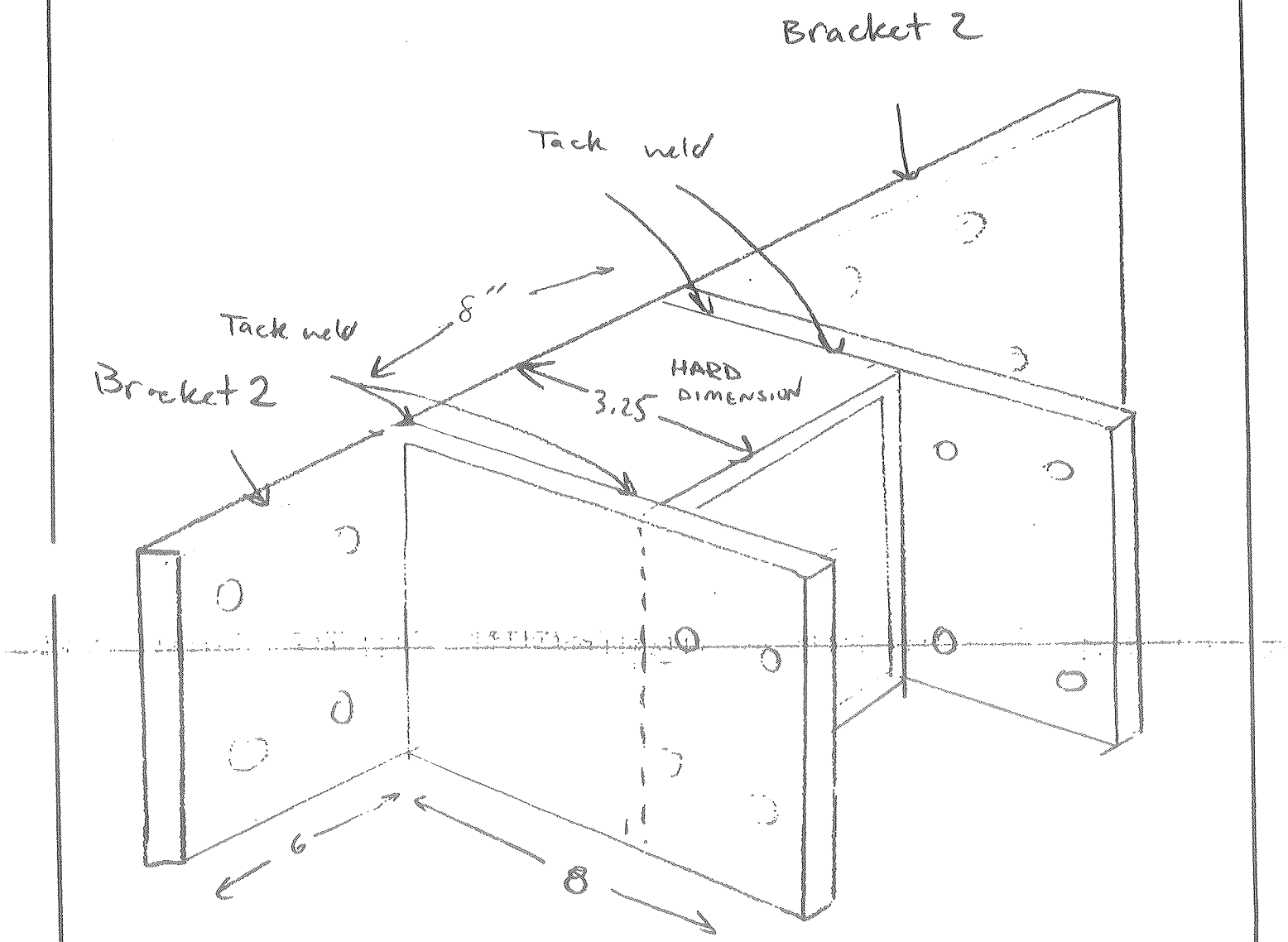

LL-398-2 (REV.

LAWRENCE LIVERMORE LABORATORY - UNIVERSITY OF CALIFORNIA

ENGINEERING NOTE

SUBJECT

FILE NO.

PAGE

NAME ALAIN INUGAI

DATE

SEISMIC LOADING ON BOLT AS BEFORE

$F = 1832$ lb $\qquad X = 43.77''$

$F_H = 0.9964\,F = 1825$ lb $\qquad M = F \times X = 160067$ lb-in

$F_V = 1.9964\,F = 3657$ lb

$$F' = \frac{F_V}{n} = \frac{3657 \text{ lb}}{4} = 914 \text{ lb}$$

$$F'' = \frac{M}{4r} = \frac{160067 \text{ lb-in}}{4\,(3.86 \text{ in})} = 10367 \text{ lb}$$

WORST FORCE ON LEFT TWO BOLTS

$$(10367)^2 = F^2 + 914^2 - 2F(914)\cos 45^\circ$$

$$0 = F^2 - 1293\,F - 1.0664 \times 10^8$$

$$F = 10993 \text{ lb}$$

$$\sigma = \text{Stress} = \frac{F}{A_{Tensile}} = \frac{10993 \text{ lb}}{0.3318 \text{ in}^2} = 33132 \text{ psi}$$

$$\tau = \text{Stress due to } F_H = \frac{F_H}{A_{Tensile}} = 5500 \text{ psi}$$

$$\sigma_1, \sigma_2 = \frac{\sigma}{2} \pm \sqrt{\left(\frac{\sigma}{2}\right)^2 + \tau^2} = \begin{matrix} \sigma_1 = 34021 \text{ psi} \\ \sigma_2 = -889 \text{ psi} \end{matrix}$$

$$\sigma_{VM} = \sqrt{\sigma_1^2 - \sigma_1\sigma_2 + \sigma_2^2} = 34474 \text{ psi}$$

$$\boxed{SF_{GRADE\,8} = \frac{130000 \text{ psi}}{34474 \text{ psi}} = 3.8 > 1.0 \checkmark}$$

LL-398-2 (REV.)

LAWRENCE LIVERMORE LABORATORY - UNIVERSITY OF CALIFORNIA

ENGINEERING NOTE

SUBJECT	FILE NO.	PAGE
WELDS OF INTERIOR BRACKETS	NAME	
	DATE 8/18/97	

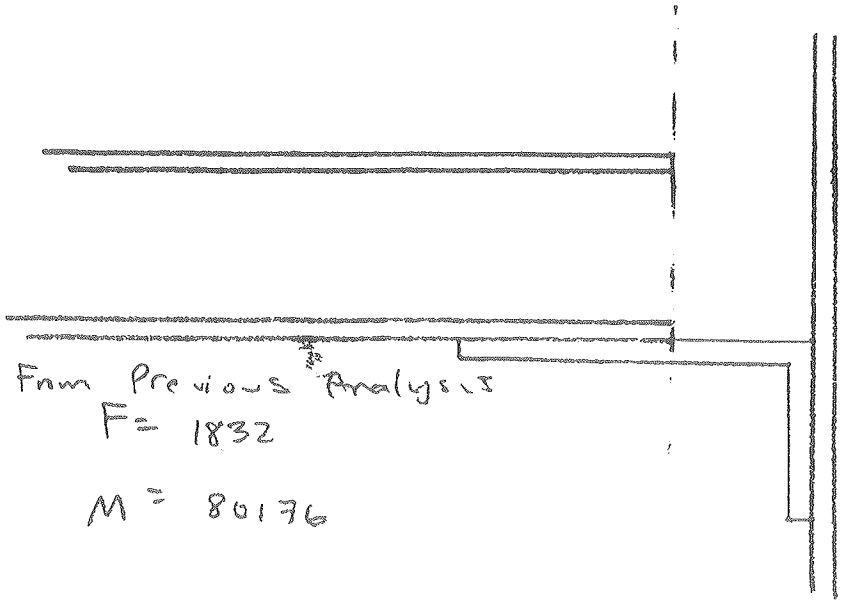

From Previous Analysis

$F = 1832$

$M = 80176$

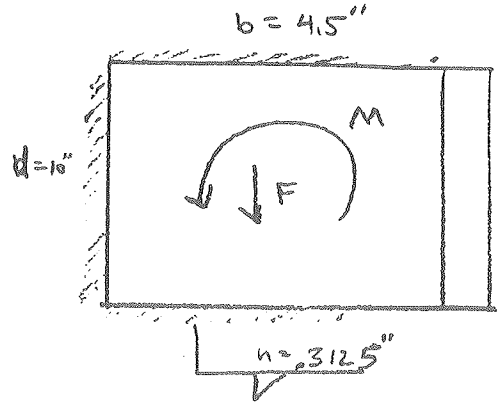

$$A = 1.414h(2b+d) = 8.40 \text{ in}^2$$

$$J_u = \frac{8b^3 + 6bd^2 + d^3}{12} - \frac{b^4}{2b+d} = 347.5 \text{ in}^3$$

$$J = 76.78 \text{ in}^4$$

$$r = \left(\left(b - \frac{b^2}{2(b+d)}\right)^2 + \left(\frac{d}{2}\right)^2 \right)^{1/2} = 6.07''$$

$$\tau_1 = \frac{F}{A} = \frac{1832 \text{ lb}}{8.40 \text{ in}^2} = 218 \text{ psi}$$

$$\tau_2 = \frac{Mr}{J} = \frac{80176\,(6.07'')}{76.78 \text{ in}^4} = 6339 \text{ psi}$$

$$\tau_{TOTAL} = \tau_1 + \tau_2 = 6557 \text{ psi}$$

A36 Steel ⇒ $$\boxed{SF = \frac{36000 \text{ psi}}{\sqrt{3}\ 6557 \text{ psi}} = 3.2}$$

ER NO 144953

DIETERICH POST.

6928

Detail A or E weldment

one side

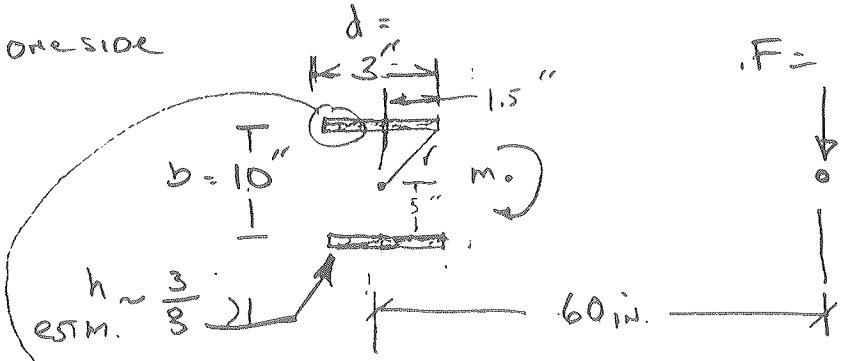

$F = \frac{1}{4}(6000\,lbs) = 1500\,lbs.$

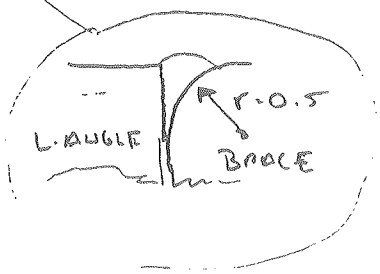

$m_{total} = Fl = 1500\,(60\,in.)$

$m = 90\,kip''$

$m_{per\ side} = \frac{90\,kip'}{2} = 45\,kip'$

"M" produces "τ" secondary shear in welds, no primary shear τ'

$A = 1.414\,hd = (1.414)(0.5)(3.12'') = 2.21\,in^2$

$J_u = \frac{d(3b^2 + d^2)}{6} = \frac{\cancel{3}(3(10)^2 + 3^2)}{\cancel{6}\,2} = 54.5\,in^3 \approx 55\,in^3$

$r = (5^2 + 1.5^2)^{\frac{1}{2}} = 5.22$

$J = 0.707\,h\,J_u$
$= 0.707(.375)\,55$
$= 14.6$

Case i

horizontal

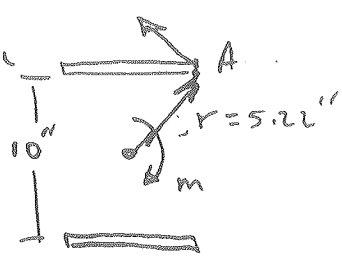

Case ii

vertical

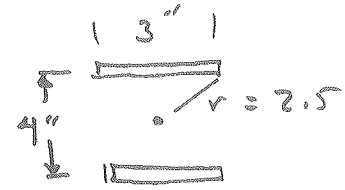

J =

(Calc: Case i)

$\tau''_A = \frac{Mr}{J} = \frac{(45 \times 10^3\,lb.in)(5.22)}{14.6\,in^4} = 16.1\,ksi$ note: reduced shear load on weld due to bolted joint

$F_v = 0.4\,F_y = 14.4\,ksi$

$S.F = \frac{F_v}{\tau_A} = \frac{14.4\,ksi}{16.1\,ksi} \leq 1.41$ //

Case ii Vert. (cont)

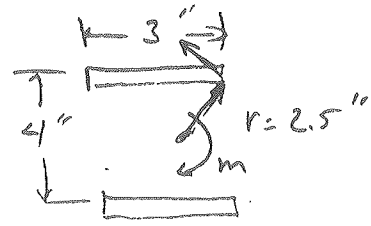

$$J_u = \frac{d(3b^2 + d^2)}{6} = \frac{3(3.4^2) + 3)}{6} = 25.5 \text{ in}^3.$$

$$J = 0.707\, h\, J_u$$

$$= 0.707(.375)\, 25.5$$

$$= 6.8 \text{ in}^4$$

$$\text{Stress } \tau_A'' = \frac{Mr}{J} = \frac{45 \times 10^3 \text{ lb} \cdot \text{in}\,(5.22)}{6.8 \text{ in}^4}$$

$$\tau_A'' = 34.5 \text{ ksi}.$$

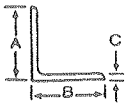

ANGLES - Bar Size

Conforms to ASTM A36
Stock Lengths: 20 and 40 Ft.

Sizes in Stock

A	B	C	Weight per Ft. in Lbs.	A	B	C	Weight per Ft. in Lbs.
½	½	⅛	.380	1¾	1¾	3/16	2.120
⅝	⅝	⅛	.480			¼	2.770
¾	¾	⅛	.590	2	1¼	3/16	1.960
⅞	⅞	⅛	.700			¼	2.550
1	⅝	⅛	.640	2	1½	⅛	1.440
1	¾	⅛	.700			3/16	2.120
1	1	⅛	.800			¼	2.770
		3/16	1.160	2	2	⅛	1.650
		¼	1.490			3/16	2.440
1⅛	1⅛	⅛	900			¼	3.190
1¼	1¼	⅛	1.010			5/16	3.920
		3/16	1.480			⅜	4.700
		¼	1.920	2½	1½	3/16	2.440
1⅜	⅞	⅛	910			¼	3.190
		3/16	1.320			5/16	3.920
1½	1¼	3/16	1.640	2½	2	3/16	2.750
1½	1½	⅛	1.230			¼	3.620
		3/16	1.800			5/16	4.500
		¼	2.340			⅜	5.300
		⅜	3.350	2½	2½	3/16	3.070
1¾	1¼	⅛	1.230			¼	4.100
		3/16	1.800			5/16	5.000
		¼	2.340			⅜	5.900
1¾	1¾	⅛	1.440			½	7.700

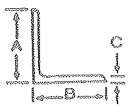

ANGLES - Bar Size

Galvanized
Conforms to ASTM A36
Stock Lengths: 20 Ft.

Sizes in Stock

A	B	C	Weight per Ft. in Lbs.	A	B	C	Weight per Ft. in Lbs.
1	1	⅛	.842	2	2	3/16	2.523
1½	1½	⅛	1.293			¼	3.273
		3/16	1.863			⅜	4.935
		¼	2.401	2½	2½	¼	4.204
2	2	⅛	1.733				

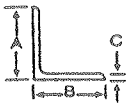

L ANGLES - Structural

Conforms to ASTM A36
Stock Lengths: 20, 40 and 60 Ft.

Sizes in Stock

A	B	C	Weight per Ft. in Lbs.	A	B	C	Weight per Ft. in Lbs.
L3	2	3/16	3.070	L5	3	3/16	8.200
		¼	4.100			⅜	9.800
		5/16	5.000			½	12.80
		⅜	5.900	L5	3½	¼	7.000
		½	7.700			5/16	8.700
L3	2½	3/16	3.350			⅜	10.40
		¼	4.500			½	13.60
		5/16	5.600			⅝	16.80
		⅜	6.600			¾	19.80
		½	8.500	L5	5	3/16	10.30
L3	3	3/16	3.710			⅜	12.30
		¼	4.900			½	16.20
		5/16	6.100			⅝	20.00
		⅜	7.200			¾	23.60
		½	9.400	L6	3½	¼	7.900
L3½	2½	¼	4.900			5/16	9.800
		5/16	6.100			⅜	11.70
		⅜	7.200			½	15.30
		½	9.400	L6	4	5/16	10.30
L3½	3	¼	5.400			⅜	12.30
		7/16	6.600			½	16.20
		¾	7.900			⅝	20.00
		½	10.20			¾	23.60
L3½	3½	¼	5.800	L6	6	5/16	12.50
		5/16	7.200			⅜	14.90
		⅜	8.500			½	19.60
		½	11.10			⅝	24.20
L4	3	¼	5.800			¾	28.70
		5/16	7.200			1	37.40
		⅜	8.500	L7	4	⅜	13.60
		½	11.10			½	17.90
L4	3½	¼	6.200			¾	26.20
		5/16	7.700	L8	4	½	19.60
		⅜	9.100			¾	28.70
		½	11.90	L8	6	½	23.00
L4	4	¼	6.600			¾	33.80
		5/16	8.200			1	44.20
		⅜	9.800	L8	8	½	26.40
		½	12.80			⅝	32.70
		5/16	15.70			¾	38.90
		¾	18.50			1	51.00
L5	3	¼	6.600	L9	4	½	21.30[1]

[1]Not a rolled section, cut from channel.

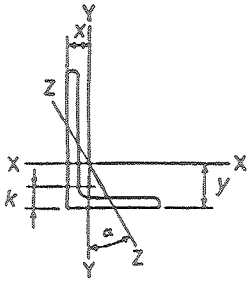

ANGLES
Equal legs and unequal legs
Properties for designing

Size and Thickness	k	Weight per Ft	Area	AXIS X-X				AXIS Y-Y				AXIS Z-Z	
				I	S	r	y	I	S	r	x	r	Tan
In.	In.	Lb.	In.²	In.⁴	In.³	In.	In.	In.⁴	In.³	In.	In.	In	α
L 9×4× ⅝	1⅛	26.3	7.73	64.9	11.5	2.90	3.36	8.32	2.65	1.04	0.858	.847	0.216
9/16	1 1/16	23.8	7.00	59.1	10.4	2.91	3.33	7.63	2.41	1.04	0.834	.850	0.218
½	1	21.3	6.25	53.2	9.34	2.92	3.31	6.92	2.17	1.05	0.810	.854	0.220
L 8×8×1⅛	1¾	56.9	16.7	98.0	17.5	2.42	2.41	98.0	17.5	2.42	2.41	1.56	1.000
1	1⅝	51.0	15.0	89.0	15.8	2.44	2.37	89.0	15.8	2.44	2.37	1.56	1.000
⅞	1½	45.0	13.2	79.6	14.0	2.45	2.32	79.6	14.0	2.45	2.32	1.57	1.000
¾	1⅜	38.9	11.4	69.7	12.2	2.47	2.28	69.7	12.2	2.47	2.28	1.58	1.000
⅝	1¼	32.7	9.61	59.4	10.3	2.49	2.23	59.4	10.3	2.49	2.23	1.58	1.000
9/16	1 3/16	29.6	8.68	54.1	9.34	2.50	2.21	54.1	9.34	2.50	2.21	1.59	1.000
½	1⅛	26.4	7.75	48.6	8.36	2.50	2.19	48.6	8.36	2.50	2.19	1.59	1.000
L 8×6×1	1½	44.2	13.0	80.8	15.1	2.49	2.65	38.8	8.92	1.73	1.65	1.28	0.543
⅞	1⅜	39.1	11.5	72.3	13.4	2.51	2.61	34.9	7.94	1.74	1.61	1.28	0.547
¾	1¼	33.8	9.94	63.4	11.7	2.53	2.56	30.7	6.92	1.76	1.56	1.29	0.551
⅝	1⅛	28.5	8.36	54.1	9.87	2.54	2.52	26.3	5.88	1.77	1.52	1.29	0.554
9/16	1 1/16	25.7	7.56	49.3	8.95	2.55	2.50	24.0	5.34	1.78	1.50	1.30	0.556
½	1	23.0	6.75	44.3	8.02	2.56	2.47	21.7	4.79	1.79	1.47	1.30	0.558
7/16	15/16	20.2	5.93	39.2	7.07	2.57	2.45	19.3	4.23	1.80	1.45	1.31	0.560
L 8×4×1	1½	37.4	11.0	69.6	14.1	2.52	3.05	11.6	3.94	1.03	1.05	0.846	0.247
¾	1¼	28.7	8.44	54.9	10.9	2.55	2.95	9.36	3.07	1.05	0.953	0.852	0.258
9/16	1 1/16	21.9	6.43	42.8	8.35	2.58	2.88	7.43	2.38	1.07	0.882	0.861	0.265
½	1	19.6	5.75	38.5	7.49	2.59	2.86	6.74	2.15	1.08	0.859	0.865	0.267
L 7×4× ¾	1¼	26.2	7.69	37.8	8.42	2.22	2.51	9.05	3.03	1.09	1.01	0.860	0.324
⅝	1⅛	22.1	6.48	32.4	7.14	2.24	2.46	7.84	2.58	1.10	0.963	0.865	0.329
½	1	17.9	5.25	26.7	5.81	2.25	2.42	6.53	2.12	1.11	0.917	0.872	0.335
⅜	⅞	13.6	3.98	20.6	4.44	2.27	2.37	5.10	1.63	1.13	0.870	0.880	0.340

ANGLES
Equal legs and unequal legs
Properties for designing

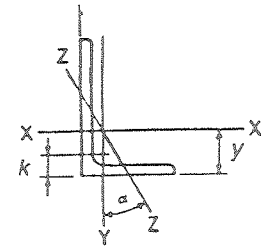

Size and Thickness	k	Weight per Ft	Area	AXIS X-X				AXIS Y-Y				AXIS Z-Z	
				I	S	r	y	I	S	r	x	r	Tan
In	In	Lb	In²	In⁴	In.³	In.	In.	In.⁴	In.³	In.	In.	In.	α
L 6×6 × 1	1½	37.4	11.0	35.5	8.57	1.80	1.86	35.5	8.57	1.80	1.86	1.17	1.000
⅞	1⅜	33.1	9.73	31.9	7.63	1.81	1.82	31.9	7.63	1.81	1.82	1.17	1.000
¾	1¼	28.7	8.44	28.2	6.66	1.83	1.78	28.2	6.66	1.83	1.78	1.17	1.000
⅝	1⅛	24.2	7.11	24.2	5.66	1.84	1.73	24.2	5.66	1.84	1.73	1.18	1.000
9/16	1 1/16	21.9	6.43	22.1	5.14	1.85	1.71	22.1	5.14	1.85	1.71	1.18	1.000
½	1	19.6	5.75	19.9	4.61	1.86	1.68	19.9	4.61	1.86	1.68	1.18	1.000
7/16	15/16	17.2	5.06	17.7	4.08	1.87	1.66	17.7	4.08	1.87	1.66	1.19	1.000
⅜	⅞	14.9	4.36	15.4	3.53	1.88	1.64	15.4	3.53	1.88	1.64	1.19	1.000
5/16	13/16	12.4	3.65	13.0	2.97	1.89	1.62	13.0	2.97	1.89	1.62	1.20	1.000
L 6×4 × ⅞	1⅜	27.2	7.98	27.7	7.15	1.86	2.12	9.75	3.39	1.11	1.12	0.857	0.421
¾	1¼	23.6	6.94	24.5	6.25	1.88	2.08	8.68	2.97	1.12	1.08	0.860	0.428
⅝	1⅛	20.0	5.86	21.1	5.31	1.90	2.03	7.52	2.54	1.13	1.03	0.864	0.435
9/16	1 1/16	18.1	5.31	19.3	4.83	1.90	2.01	6.91	2.31	1.14	1.01	0.866	0.438
½	1	16.2	4.75	17.4	4.33	1.91	1.99	6.27	2.08	1.15	0.987	0.870	0.440
7/16	15/16	14.3	4.18	15.5	3.83	1.92	1.96	5.60	1.85	1.16	0.964	0.873	0.443
⅜	⅞	12.3	3.61	13.5	3.32	1.93	1.94	4.90	1.60	1.17	0.941	0.877	0.446
5/16	13/16	10.3	3.03	11.4	2.79	1.94	1.92	4.18	1.35	1.17	0.918	0.882	0.448
L 6×3½× ½	1	15.3	4.50	16.6	4.24	1.92	2.08	4.25	1.59	0.972	0.833	0.759	0.344
⅜	⅞	11.7	3.42	12.9	3.24	1.94	2.04	3.34	1.23	0.988	0.787	0.767	0.350
5/16	13/16	9.8	2.87	10.9	2.73	1.95	2.01	2.85	1.04	0.996	0.763	0.772	0.352
L 5×5 × ⅞	1⅜	27.2	7.98	17.8	5.17	1.49	1.57	17.8	5.17	1.49	1.57	0.973	1.000
¾	1¼	23.6	6.94	15.7	4.53	1.51	1.52	15.7	4.53	1.51	1.52	0.975	1.000
⅝	1⅛	20.0	5.86	13.6	3.86	1.52	1.48	13.6	3.86	1.52	1.48	0.978	1.000
½	1	16.2	4.75	11.3	3.16	1.54	1.43	11.3	3.16	1.54	1.43	0.983	1.000
7/16	15/16	14.3	4.18	10.0	2.79	1.55	1.41	10.0	2.79	1.55	1.41	0.986	1.000
⅜	⅞	12.3	3.61	8.74	2.42	1.56	1.39	8.74	2.42	1.56	1.39	0.990	1.000
5/16	13/16	10.3	3.03	7.42	2.04	1.57	1.37	7.42	2.04	1.57	1.37	0.994	1.000

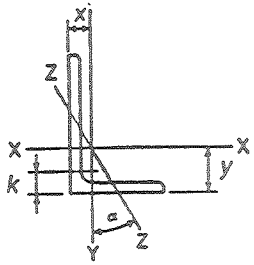

ANGLES
Equal legs and unequal legs
Properties for designing

Size and Thickness	k	Weight per Ft	Area	AXIS X-X				AXIS Y-Y				AXIS Z-Z	
				I	S	r	y	I	S	r	x	r	Tan
In.	In.	Lb.	In.²	In.⁴	In.³	In.	In.	In.⁴	In.³	In.	In	In	α
L 5×3½× ¾	1¼	19.8	5.81	13.9	4.28	1.55	1.75	5.55	2.22	0.977	0.996	0.748	0.464
⅝	1⅛	16.8	4.92	12.0	3.65	1.56	1.70	4.83	1.90	0.991	0.951	0.751	0.472
½	1	13.6	4.00	9.99	2.99	1.58	1.66	4.05	1.56	1.01	0.906	0.755	0.479
7/16	15/16	12.0	3.53	8.90	2.64	1.59	1.63	3.63	1.39	1.01	0.883	0.758	0.482
⅜	⅞	10.4	3.05	7.78	2.29	1.60	1.61	3.18	1.21	1.02	0.861	0.762	0.486
5/16	13/16	8.7	2.56	6.60	1.94	1.61	1.59	2.72	1.02	1.03	0.838	0.766	0.489
¼	¾	7.0	2.06	5.39	1.57	1.62	1.56	2.23	0.830	1.04	0.814	0.770	0.492
L 5×3 × ⅝	1	15.7	4.61	11.4	3.55	1.57	1.80	3.06	1.39	0.815	0.796	0.644	0.349
½	1	12.8	3.75	9.45	2.91	1.59	1.75	2.58	1.15	0.829	0.750	0.648	0.357
7/16	15/16	11.3	3.31	8.43	2.58	1.60	1.73	2.32	1.02	0.837	0.727	0.651	0.361
⅜	⅞	9.8	2.86	7.37	2.24	1.61	1.70	2.04	0.888	0.845	0.704	0.654	0.364
5/16	13/16	8.2	2.40	6.26	1.89	1.61	1.68	1.75	0.753	0.853	0.681	0.658	0.368
¼	¾	6.6	1.94	5.11	1.53	1.62	1.66	1.44	0.614	0.861	0.657	0.663	0.371
L 4×4 × ¾	1⅛	18.5	5.44	7.67	2.81	1.19	1.27	7.67	2.81	1.19	1.27	0.778	1.000
⅝	1	15.7	4.61	6.66	2.40	1.20	1.23	6.66	2.40	1.20	1.23	0.779	1.000
½	⅞	12.8	3.75	5.56	1.97	1.22	1.18	5.56	1.97	1.22	1.18	0.782	1.000
7/16	13/16	11.3	3.31	4.97	1.75	1.23	1.16	4.97	1.75	1.23	1.16	0.785	1.000
⅜	¾	9.8	2.86	4.36	1.52	1.23	1.14	4.36	1.52	1.23	1.14	0.788	1.000
5/16	11/16	8.2	2.40	3.71	1.29	1.24	1.12	3.71	1.29	1.24	1.12	0.791	1.000
¼	⅝	6.6	1.94	3.04	1.05	1.25	1.09	3.04	1.05	1.25	1.09	0.795	1.000
L 4×3½× ½	15/16	11.9	3.50	5.32	1.94	1.23	1.25	3.79	1.52	1.04	1.00	0.722	0.750
7/16	⅞	10.6	3.09	4.76	1.72	1.24	1.23	3.40	1.35	1.05	0.978	0.724	0.753
⅜	13/16	9.1	2.67	4.18	1.49	1.25	1.21	2.95	1.17	1.06	0.955	0.727	0.755
5/16	¾	7.7	2.25	3.56	1.26	1.26	1.18	2.55	0.994	1.07	0.932	0.730	0.757
¼	11/16	6.2	1.81	2.91	1.03	1.27	1.16	2.09	0.808	1.07	0.909	0.734	0.759

ANGLES
Equal legs and unequal legs
Properties for designing

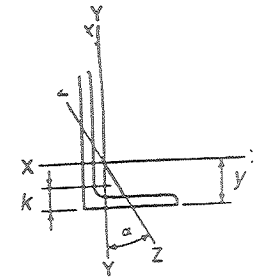

Size and Thickness	k	Weight per Ft	Area	AXIS X-X				AXIS Y-Y				AXIS Z
				I	S	r	y	I	S	r	x	r
In	In	Lb	In²	In⁴	In.³	In.	In.	In.⁴	In.³	In.	In.	In.
L 4 × 3 × ½	15/16	11.1	3.25	5.05	1.89	1.25	1.33	2.42	1.12	0.864	0.827	0.639
7/16	⅞	9.8	2.87	4.52	1.68	1.25	1.30	2.18	0.992	0.871	0.804	0.641
⅜	13/16	8.5	2.48	3.96	1.46	1.26	1.28	1.92	0.866	0.879	0.782	0.644
5/16	¾	7.2	2.09	3.38	1.23	1.27	1.26	1.65	0.734	0.887	0.759	0.647
¼	11/16	5.8	1.69	2.77	1.00	1.28	1.24	1.36	0.599	0.896	0.736	0.651
L 3½ × 3½ × ½	⅞	11.1	3.25	3.64	1.49	1.06	1.06	3.64	1.49	1.06	1.06	0.683
7/16	13/16	9.8	2.87	3.26	1.32	1.07	1.04	3.26	1.32	1.07	1.04	0.684
⅜	¾	8.5	2.48	2.87	1.15	1.07	1.01	2.87	1.15	1.07	1.01	0.687
5/16	11/16	7.2	2.09	2.45	0.976	1.08	0.990	2.45	0.976	1.08	0.990	0.690
¼	⅝	5.8	1.69	2.01	0.794	1.09	0.968	2.01	0.794	1.09	0.968	0.694
L 3½ × 3 × ½	15/16	10.2	3.00	3.45	1.45	1.07	1.13	2.33	1.10	0.881	0.875	0.621
7/16	⅞	9.1	2.65	3.10	1.29	1.08	1.10	2.09	0.975	0.889	0.853	0.622
⅜	13/16	7.9	2.30	2.72	1.13	1.09	1.08	1.85	0.851	0.897	0.830	0.625
5/16	¾	6.6	1.93	2.33	0.954	1.10	1.06	1.58	0.722	0.905	0.808	0.627
¼	11/16	5.4	1.56	1.91	0.776	1.11	1.04	1.30	0.589	0.914	0.785	0.631
L 3½ × 2½ × ½	15/16	9.4	2.75	3.24	1.41	1.09	1.20	1.36	0.760	0.704	0.705	0.534
7/16	⅞	8.3	2.43	2.91	1.26	1.09	1.18	1.23	0.677	0.711	0.682	0.539
⅜	13/16	7.2	2.11	2.56	1.09	1.10	1.16	1.09	0.592	0.719	0.660	0.537
5/16	¾	6.1	1.78	2.19	0.927	1.11	1.14	0.939	0.504	0.727	0.637	0.540
¼	11/16	4.9	1.44	1.80	0.755	1.12	1.11	0.777	0.412	0.735	0.614	0.54
L 3 × 3 × ½	15/16	9.4	2.75	2.22	1.07	0.898	0.932	2.22	1.07	0.898	0.932	0.58
7/16	¾	8.3	2.43	1.99	0.954	0.905	0.910	1.99	0.954	0.905	0.910	0.58
⅜	11/16	7.2	2.11	1.76	0.833	0.913	0.888	1.76	0.833	0.913	0.888	0.58
5/16	⅝	6.1	1.78	1.51	0.707	0.922	0.865	1.51	0.707	0.922	0.865	0.58
¼	9/16	4.9	1.44	1.24	0.577	0.930	0.842	1.24	0.577	0.930	0.842	0.59
3/16	½	3.71	1.09	0.962	0.441	0.939	0.820	0.962	0.441	0.939	0.820	0.59

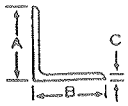

ANGLES - Bar Size

Conforms to ASTM A36
Stock Lengths: 20 and 40 Ft.

Sizes in Stock

A	B	C	Weight per Ft. in Lbs.	A	B	C	Weight per Ft. in Lbs.
½	½	⅛	.360	1¼	1¼	3/16	2.120
⅝	⅝	⅛	.480			¼	2.770
¾	¾	⅛	.590	2	1¼	3/16	1.960
⅞	⅞	⅛	.700			¼	2.550
1	⅝	⅛	.640	2	1½	⅛	1.440
1	¾	⅛	700			3/16	2.120
1	1	⅛	.600			¼	2.770
		7/16	1 160	2	2	⅛	1.650
		¼	1.490			3/16	2.440
1⅛	1⅛	⅛	900			¼	3.190
1¼	1¼	⅛	1 010			5/16	3.920
		7/16	1 460			⅜	4.700
		¼	1 920	2½	1½	3/16	2.440
1⅜	⅞	⅛	910			¼	3.190
		[illegible]	1 320			5/16	3.920
1½	1¼	[illegible]	1 640	2	2	3/16	2.750
1½	1½	[illegible]	1 230			¼	3.620
		5/16	1 800			5/16	4.500
		¼	2.340			⅜	5.300
		½	3 350	2	2½	3/16	3.070
1¾	1¼	⅛	1 230			¼	4.100
		[illegible]	1 800			5/16	5.000
		[illegible]	2 340			⅜	5 900
1¾	1¼	[illegible]	1 440			½	7 700

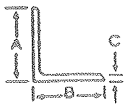

ANGLES - Bar Size

Galvanized
Conforms to ASTM A36
Stock Lengths 20 Ft

Sizes in Stock

A	B	C	Weight per Ft. in Lbs.	A	B	C	Weight per Ft. in Lbs.
1	1	⅛	.842	2	2	3/16	2.523
1½	1½	⅛	1.293			¼	3.273
		3/16	1.863			⅜	4.935
		¼	2.40[illegible]	2½	2½	¼	4.204
2	2	⅛	1 733				

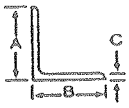

L ANGLES - Structural

Conforms to ASTM A36
Stock Lengths: 20, 40 and 60 Ft.

Sizes in Stock

A	B	C	Weight per Ft. in Lbs.	A	B	C	Weight per Ft. in Lbs.
L3	2	3/16	3.070	L5	3	5/16	8.200
		¼	4.100			⅜	9.800
		5/16	5.000			½	12.80
		⅜	5.900	L5	3½	¼	7.000
		½	7.700			5/16	8.700
L3	2½	3/16	3.350			⅜	10.40
		¼	4.500			½	13.60
		5/16	5.600			⅝	16.80
		⅜	6.600			¾	19.80
		½	8.500	L5	5	5/16	10.30
L3	3	3/16	3.710			⅜	12.30
		¼	4.900			½	16.20
		5/16	6.100			⅝	20.00
		⅜	7.200			¾	23.60
		½	9.400	L6	3½	¼	7.900
L3½	2½	¼	4.900			5/16	9.800
		5/16	6.100			⅜	11.70
		⅜	7 200			½	15.30
		½	9.400	L6	4	5/16	10.30
L3½	3	¼	5.400			⅜	12.30
		5/16	6 600			½	16.20
		⅜	7 900			⅝	20.00
		½	10 20			¾	23.60
L3½	3½	¼	5 800	L6	6	5/16	12.50
		5/16	7 200			⅜	14.90
		⅜	8 500			½	19.60
		½	11.10			⅝	24.20
L4	3	¼	5.800			¾	28.70
		5/16	7.200			1	37.40
		⅜	8.500	L7	4	⅜	13.60
		½	11.10			½	17.90
L4	3½	¼	6.200			¾	26.20
		5/16	7.700	L8	4	½	19.60
		⅜	9.100			¾	28.70
		½	11.90	L8	6	½	23.00
L4	4	¼	6.600			¾	33.80
		5/16	8.200			1	44.20
		⅜	9.800	L8	8	½	26.40
		½	12 80			⅝	32.70
		⅝	15.70			¾	38.90
		¾	18 50			1	51.00
L5	3	¼	6 600	L9	4	½	21.30[1]

[1]Not a rolled section, cut from channel

st of ou
, Josepl
or com
ation o
ringeme
S. Joseph

LAWRENCE LIVERMORE LABORATORY - UNIVERSITY OF CALIFORNIA

ENGINEERING NOTE

FILE NO. | PAGE

SUBJECT: TORSION IN EXTERIOR BRACKETS

NAME: ALAIN INUGAI

DATE

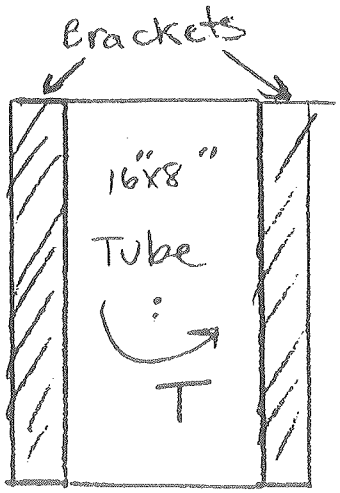

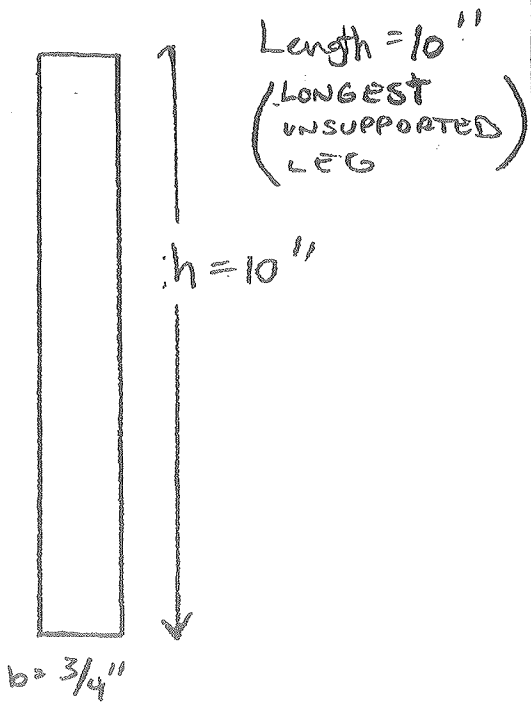

GOAL: USE THEORY OF TORSIONAL RESISTANCE TO SIZE BRACKETS

stress, $\tau = \frac{tT}{R}$

T = TORQUE

t = thickness of failure member

deflection, $\theta = \frac{TL}{ER}$

T = Torque

R = Torsional Resistance

E = Youngs Mod. Steel 29×10^6 psi

L = Length of Bracket (10")

θ = IN RADIANS

Both Brakets resist torsion and thus contribute to resistance

FROM DESIGN OF WELDED STRUCTURES CHAPTER 2

LL-398-2 (REV.

LAWRENCE LIVERMORE LABORATORY - UNIVERSITY OF CALIFORNIA

ENGINEERING NOTE

FILE NO. | PAGE

SUBJECT: TORSION IN FRAME BRACKETS

NAME: ALAIN INVGAI

DATE:

We assume

$$\tau_{max} = \frac{36000}{\sqrt{3}\,(3.0)} = 6928 \text{ psi}$$

Theor Correction Factor

Safety Factor

We also assume

$$\theta_{max} = 0.25^{\circ} = .00435 \text{ radians}$$

What Does R have to be?

WE HAVE $t = 3/4''$

$L = 7''$

$E = 29 \times 10^{6}$ psi

FOR LOADING TORQUE WE TAKE 1/4 TOTAL LOAD (APPROXIMATE WEIGHT ON A WING) WE APPLY THIS TO THE TWO EXTERIOR JOINTS AND NOTE THE 4" MOMENT ARM.

$$T = \left(\frac{30000 \text{ lb}}{4\,(2)}\right) 4'' = 15000 \text{ lb-in}$$

$$F = \frac{\text{TOTAL WEIGHT}}{4 * 2}$$

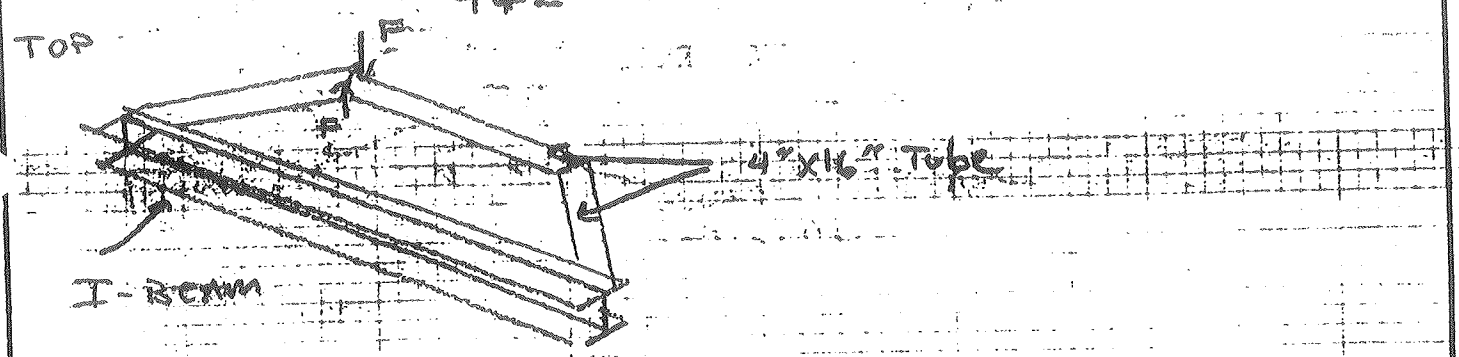

LL-398-2 (REV.

R MUST THEN BE

$$R = \frac{TL}{E\theta} = \frac{15000 \text{ lb-in}(10'')}{29\times10^6 \text{ psi}\,(.00433)} = 1.189 \text{ in}^4$$

$$R = \frac{tT}{\tau} = \frac{(0.75'')(15000 \text{ lb-in})}{6928 \text{ psi}} = 1.624 \text{ in}^4$$

SO, THE STRESS EQUATION DRIVES R.

LAWRENCE LIVERMORE LABORATORY - UNIVERSITY OF CALIFORNIA

ENGINEERING NOTE

SUBJECT	FILE NO.	PAGE
	NAME	
	DATE	

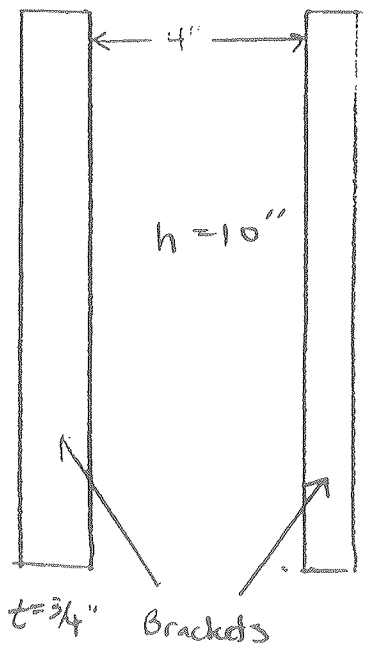

$$\frac{h}{t} = 13\tfrac{1}{3}$$

$$\Rightarrow \beta = 0.313$$

$$R = \beta h t^3$$

$$= (.313)(10'')(.75'')^3 = 1.32 \text{ in}^4$$

$R_{TOTAL} = 2.64 \text{ in}^4$

BECAUSE 2 BRACKETS IN THE MINIMUM NUMBER RESISTING TORSION

WE NOTE R IS HIGHER THAN NECESSARY

NOW WE CALCULATE THE SAFETY FACTOR

$$\tau = \frac{Tt}{R} = \frac{15000 \text{ lb-in } (3/4'')}{2.64 \text{ in}^4} = 4261 \text{ psi}$$

$$\boxed{SF = \frac{20785 \text{ psi}}{4261 \text{ psi}} = 4.9 > 3.0 \checkmark}$$

DIETERICH POSTER ORDER NO 144953

LAWRENCE LIVERMORE LABORATORY - UNIVERSITY OF CALIFORNIA

ENGINEERING NOTE

FILE NO. | PAGE

SUBJECT: BOTTOM OUTSIDE FRAME BRACKET

NAME

DATE

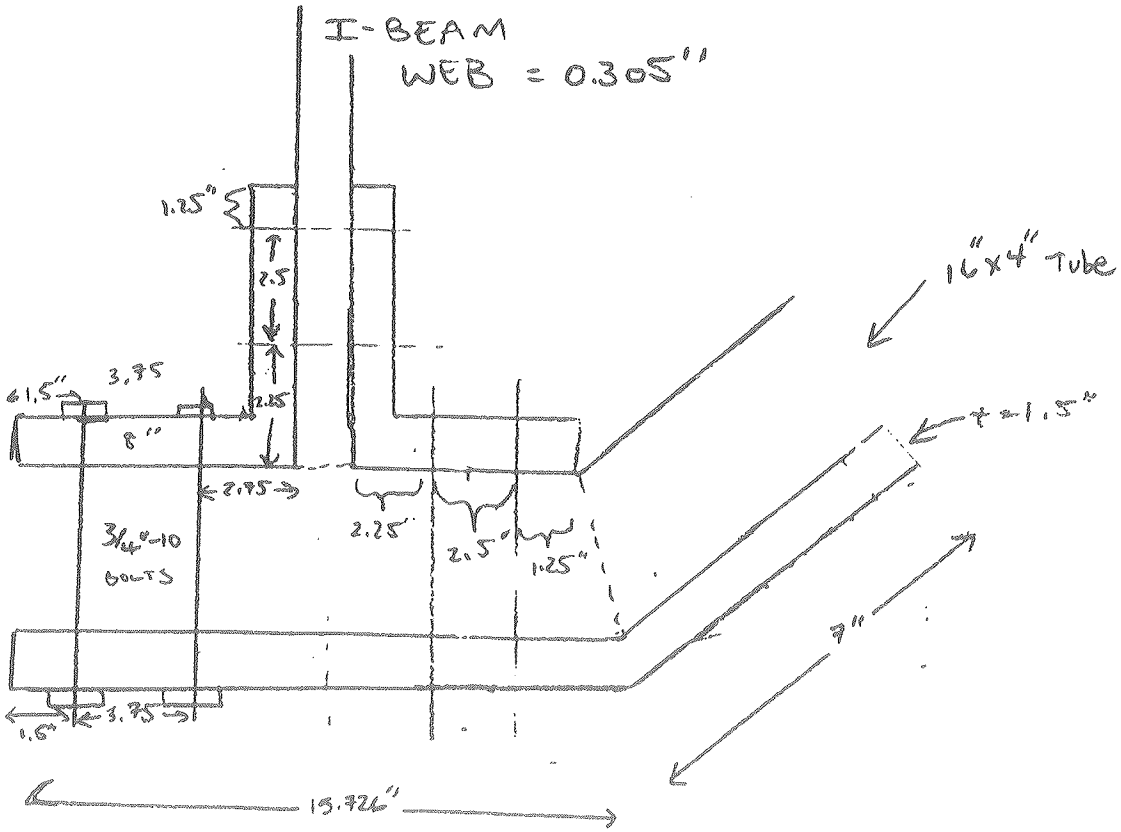

WE APPLY THE PLATE LOAD (19000 lbs) TO 2 PADS WHICH SIT NEXT TO THE EXTERIOR BRACKET. THESE ARE 20" LONG. THUS WE HAVE 9500 lbs APPLIED 10" FROM THE END OF THE BRACKET. WE LOOK AT THE STRESS IN THIS BRACKET AS IT IS THE WEAKEST ONE IN THE EXTERIOR SYSTEM.

DIETERICH POS... JER NO 144953

LAWRENCE LIVERMORE LABORATORY - UNIVERSITY OF CALIFORNIA

ENGINEERING NOTE

FILE NO.	PAGE

SUBJECT: SIDE OUTSIDE FRAME

NAME: ALAIN INUGAI

DATE:

ALL BRACKETS 3/4" THICK

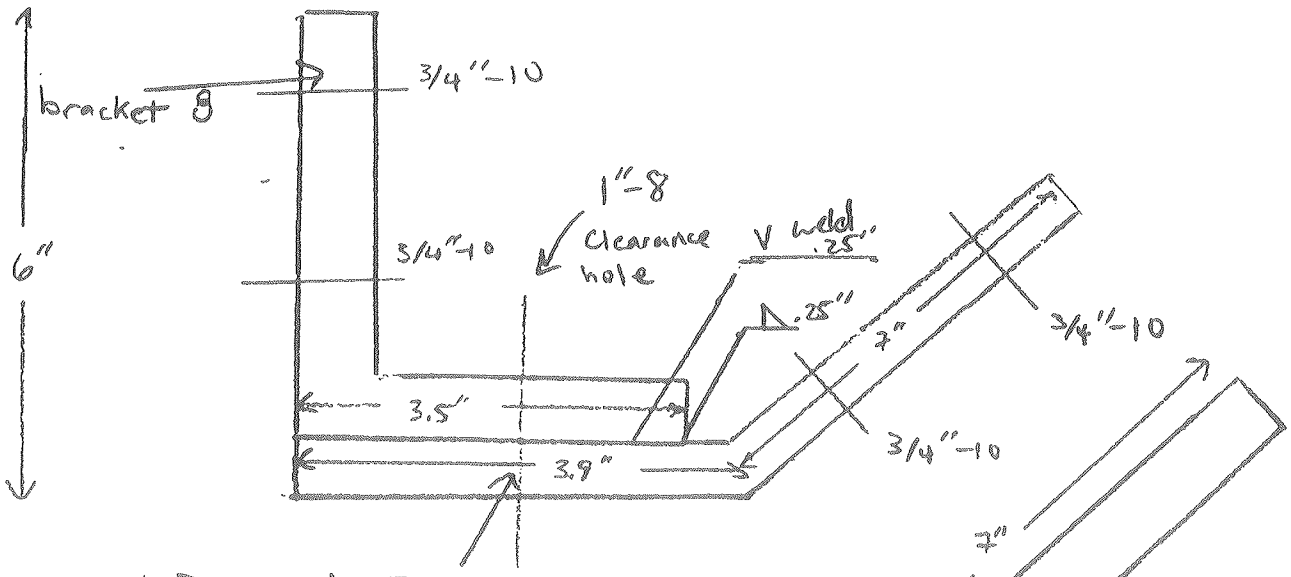

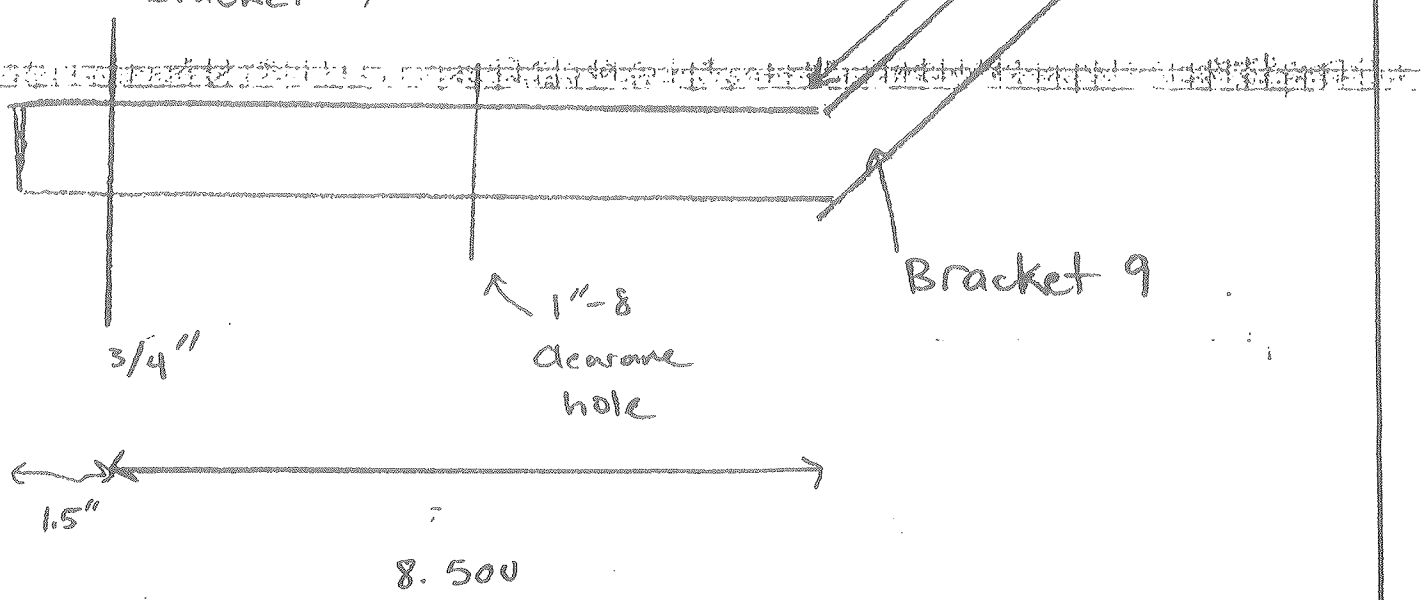

LL-398-2 (REV.

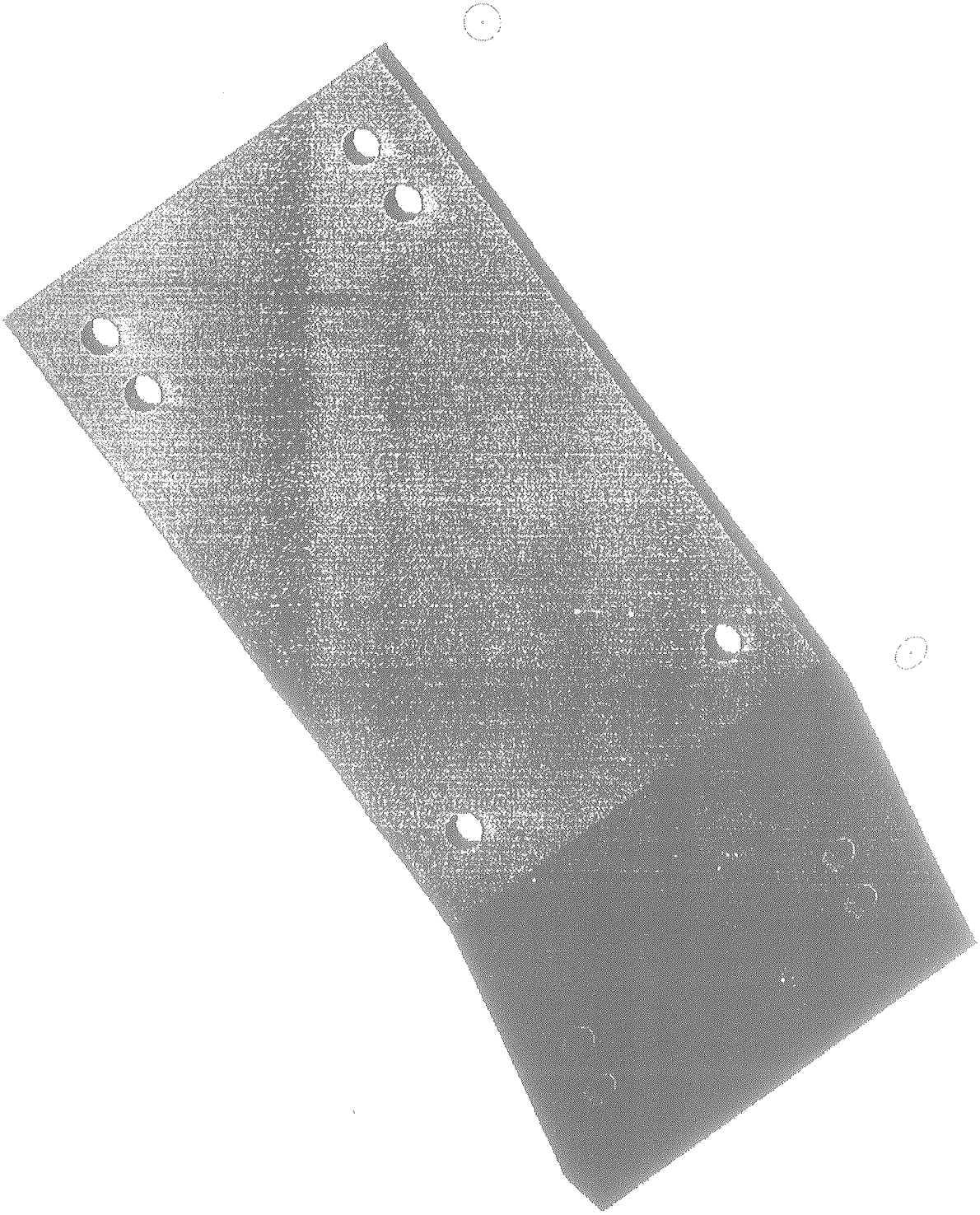

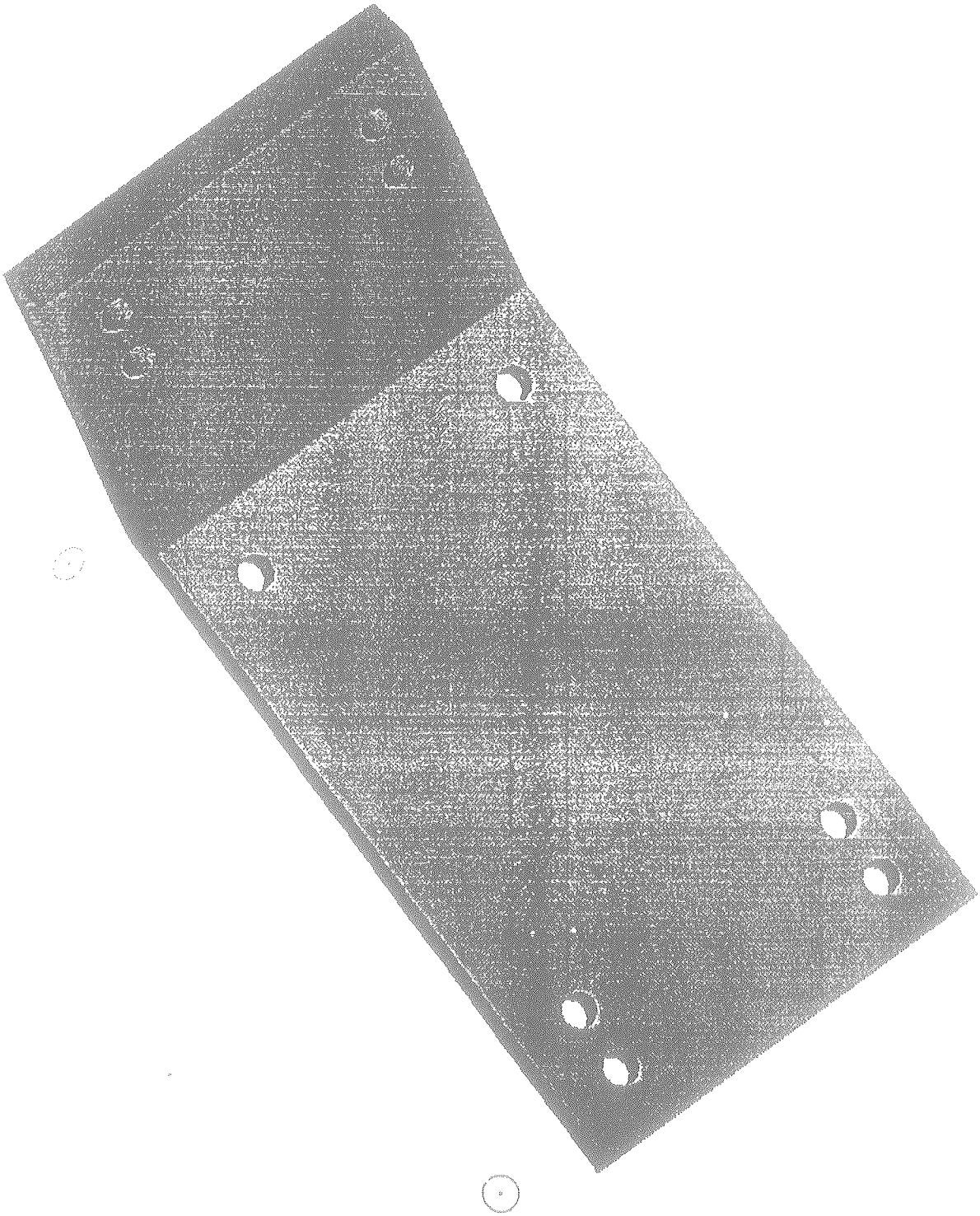

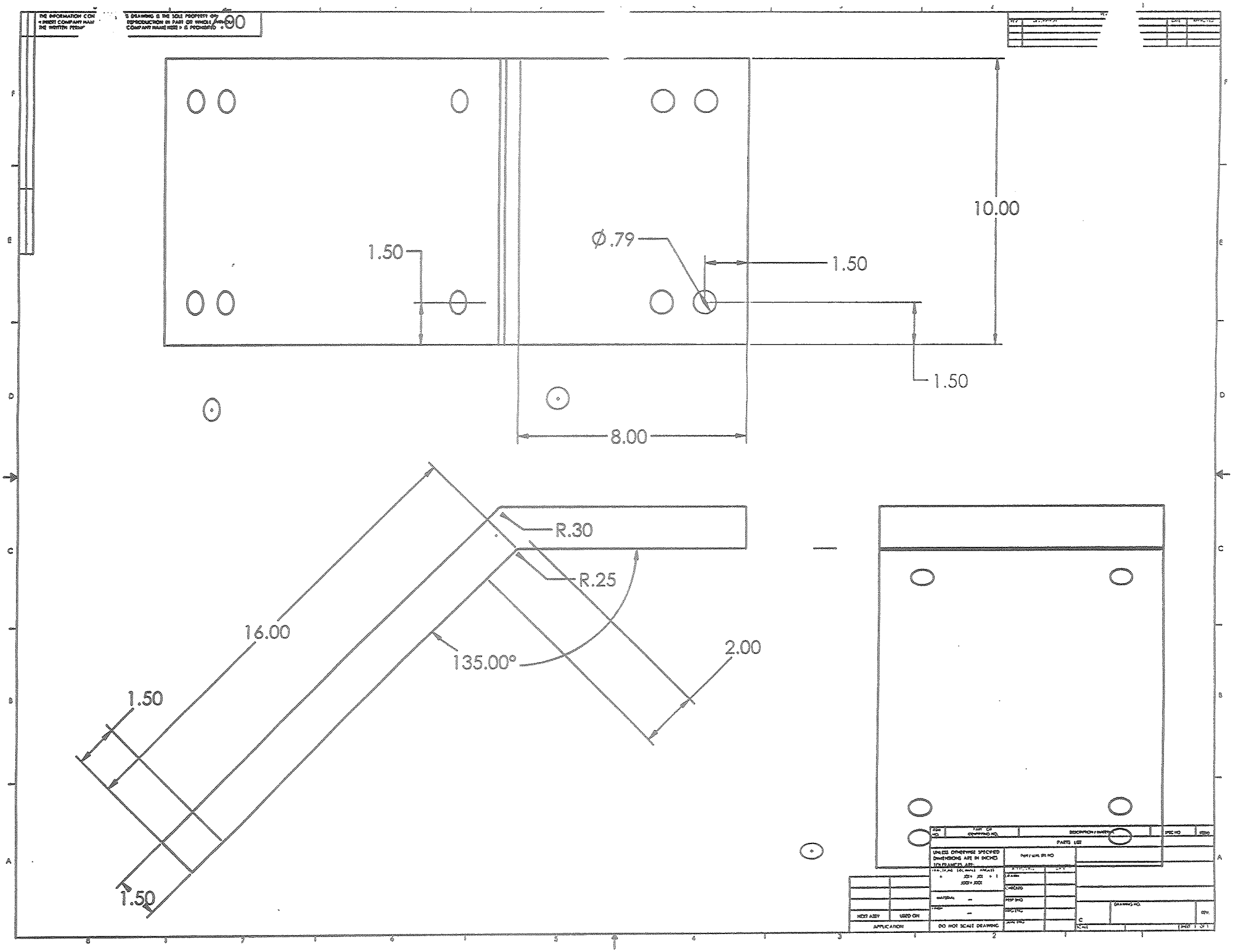
10.00
1.50
Ø.79
1.50
1.50
8.00
R.30
R.25
16.00
135.00°
2.00
1.50
1.50
PARTS LIST
UNLESS OTHERWISE SPECIFIED DIMENSIONS ARE IN INCHES
TOLERANCES ARE:
DO NOT SCALE DRAWING
NEXT ASSY
USED ON
APPLICATION

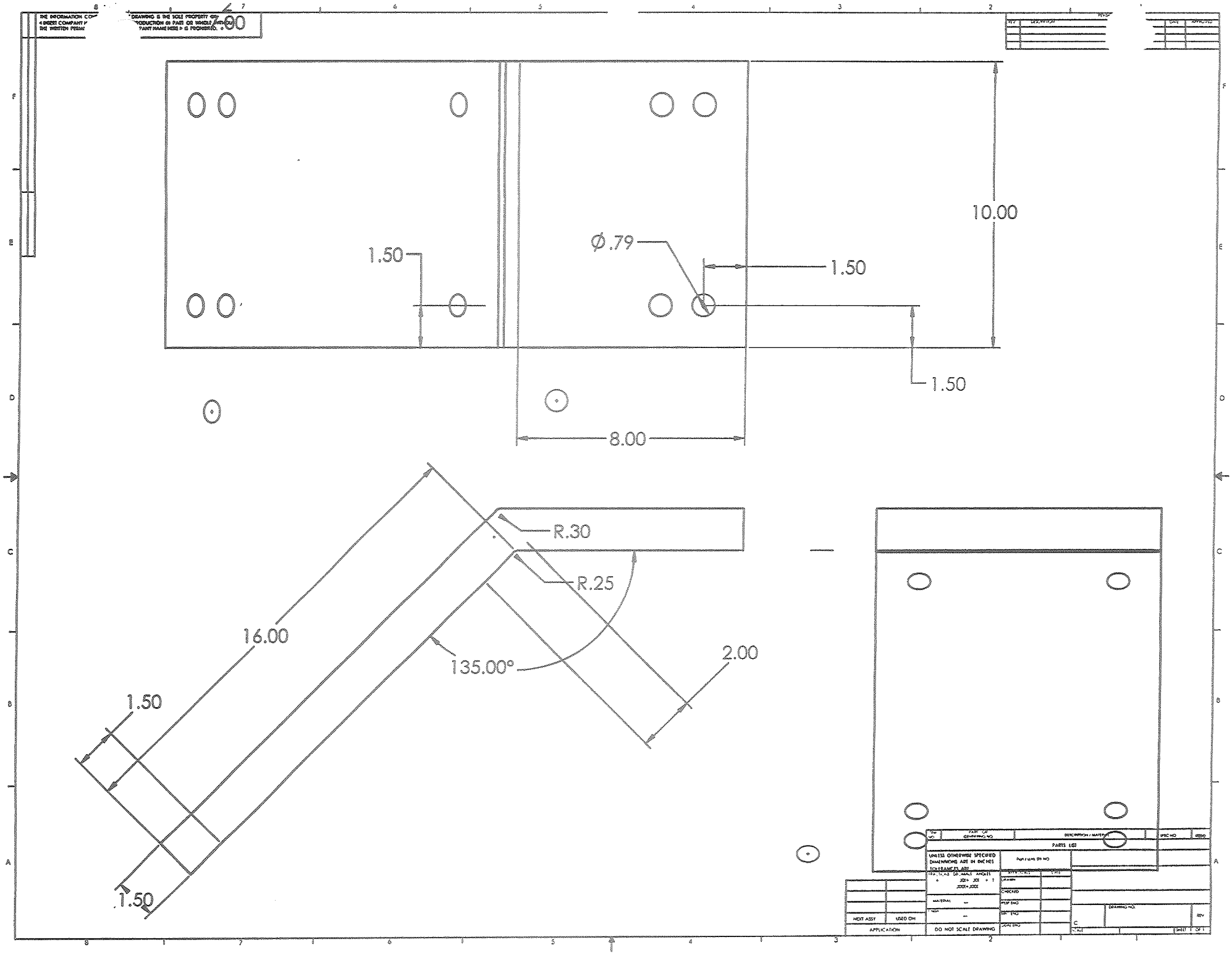
10.00
Ø.79
1.50
1.50
1.50
8.00
R.30
R.25
16.00
135.00°
2.00
1.50
1.50
PARTS LIST
UNLESS OTHERWISE SPECIFIED
DIMENSIONS ARE IN INCHES
TOLERANCES ARE
MATERIAL
NEXT ASSY
USED ON
APPLICATION
DO NOT SCALE DRAWING
DRAWING NO
SHEET
OF 1

Estimate Stresses at outer Brace for Full Penetration weld at 135° 16x4 tube Joints. 2 CASES

1) HORIZONTAL

2) VERTICAL

Case 1: HORIZONTAL LOAD

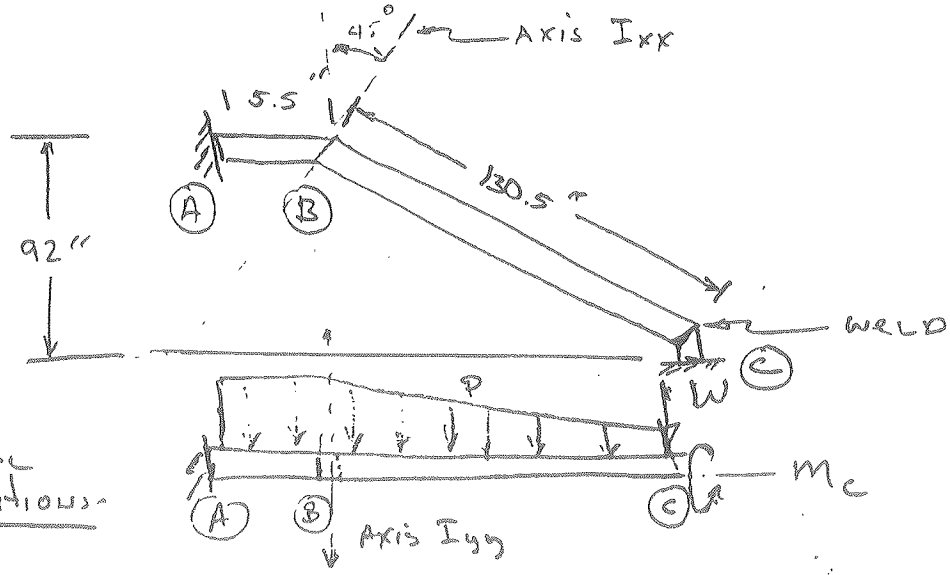

HORIZONTAL LOAD CONDITIONS

i) LOADING P is COMBINATION of plate LOAD AND Member Weight

ii) LOADING W is END LOADING FROM Tube : Beam Connection.

iii) Moment Mc is TORQUE ON END from Deflection of Inner BRACE AND torque from Outer BRACE

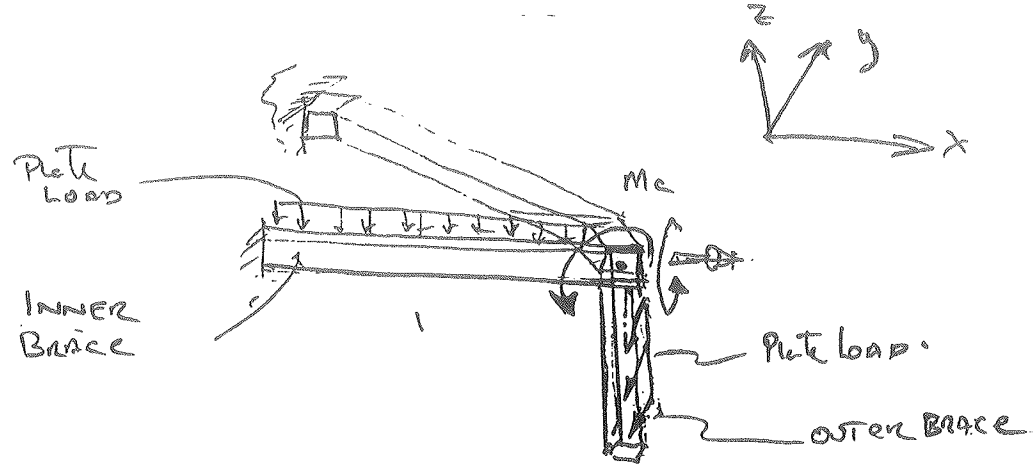

Moment Area. 16 x 4 TUBE

- Highest stress at top weld ② and at Bottom near Plates Retainer Clips.

Case 1

1) in Horizontal Moment Area x-x

d = 16
b = 4

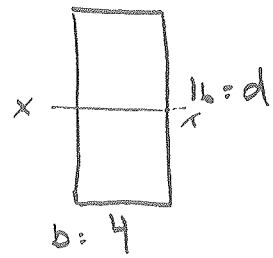

bending about xx

$$I_{u_{xx}} = \frac{d^2}{6}(3b + d)$$

$$= \frac{16^2}{6}((3 \times 4) + 16)$$

$$I = I_{u_{xx}} = 448 \text{ in}^4$$

note: I = Iu for Butt weld

Case 2

2) in Vertical Moment Area y-y

d = 4
b = 16

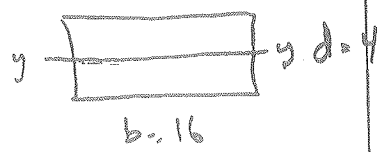

bending about yy.

$$I_{u_{y-y}} = \frac{d^2}{6}(3b + d)$$

$$= \frac{4^2}{6}((3 \times 16) + 4)$$

$$= \frac{16}{6}(48 + 4)$$

$$I = I_u = 139 \text{ in}^4$$

Weld Depth h = 0.313"

$$\text{Area} = \tau(h + w)2$$

$$= 0.313(16 + 4)2$$

$$A = 12.52 \text{ in}^2$$

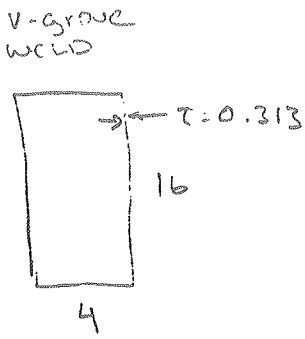

CASE 1 HORIZONTAL - STRESSES

1.5 Factor Safety and Assume load conditions

CALCULATE ALLOWABLE LOADS.

S_{yallw} Base d on 0.6 F.S. Parent material $= 0.6(46\ ksi)$

$S_{yallw} = 27.6\ ksi$

S_y Weld Fillet $= 56\ ksi$

S_y Tube $= 46\ ksi$

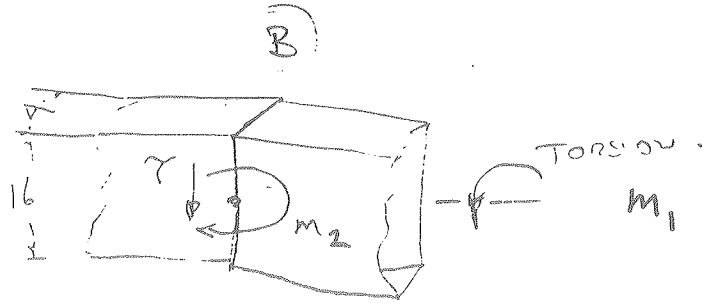

i) Torsion $J = J_u = \frac{(b+d)^3}{6} = \frac{(20)^3}{6} = 1333.4$

$r = [16^2 + 4^2]^{1/2}$

$r = 16.5$

$$\tau_1 = \frac{M_1 r}{J} = M_1 \frac{(16.5)}{1333} = 0.0124\ M_1$$

ii) Bending $I = 448$

$$\tau_2 = \sigma_2 = \frac{M_2 c}{I} = \frac{M_2 8}{448} = 0.018\ M_2$$

iii) Shear $A = 12.52\ in^2$

$$\tau_3 = \frac{V}{A} = \frac{V}{12.52}$$

$$\tau = \left[(\tau_1 + \tau_3)^2 + \tau_2\right]^{\frac{1}{2}} = \left[\left(0.0124\ M_1 + \frac{V}{12.52}\right)^2 + \left(0.018 M_2\right)^2\right]$$

CASE 1 (cont)

Solve for M_1, V & M_2 to find MAXIMUM Stress on Weld.

$$\tau = \left[\left(0.0124\, M_1 + \frac{V}{12.52}\right)^2 + \left(0.019\, M_2\right)^2\right]^{\frac{1}{2}}$$

ASSUMPTIONS:

1) Horiz loading from Page 1

2) Plate load consists of $\frac{1}{2}$ total for Segment. find Centroid

3) member load is $\frac{1}{4}$ all members - weight carried thru. each member equally.

4) structure indeterminant - use F.E.A.

Note: FEA Code showed that stresses are acceptable in structural members.

13 732 500 SHEETS, FILLER 5 SQUARE
42 381 50 SHEETS EYE-EASE® 5 SQUARE
42 382 100 SHEETS EYE-EASE® 5 SQUARE
42 389 200 SHEETS EYE-EASE® 5 SQUARE
42 392 100 RECYCLED WHITE 5 SQUARE
42 399 200 RECYCLED WHITE 5 SQUARE
Made in U.S.A.
National® Brand

Case 2: VERTICAL LOADING

In the vertical case the plate load is transferred from the outer brace to the inner brace.

The principal loads are supported by the welds at the springback members and the plate from the bottom.

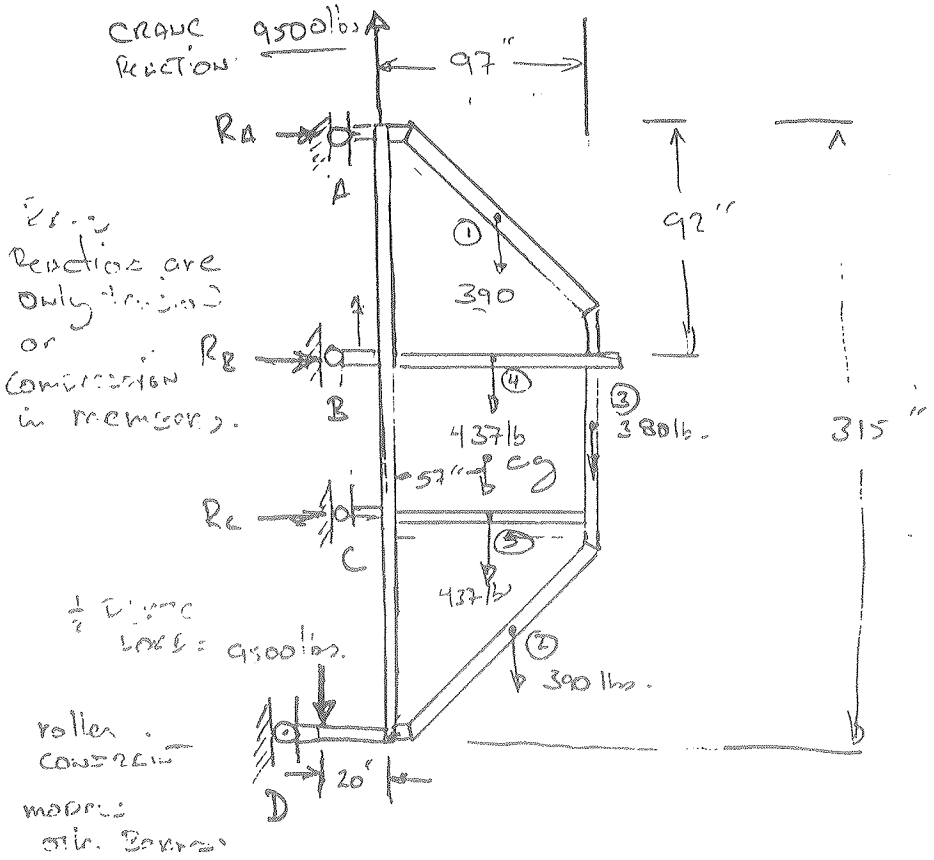

$\Sigma W =$ 390 ① + 390 ② + 380 ③ + 437 ④ + 437 ⑤ = 2034 lbs.

First centroid:

$$\bar{x} = \frac{\sum x_i W_i}{\sum W_i}$$

$\bar{x} = 57''$

$\bar{y} = 315''/2 = 157.5''$

Although model does not support moments the actual truss system does have connections (member connections) that will give moments.

The FEA model shows these values are small. ✓

To check weld stress look at loads resultant normal to and tangent to the weld moment areas. I_{xx}, I_{yy}

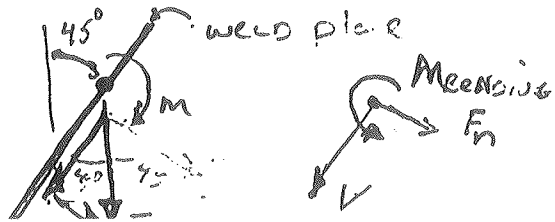

$$\sigma = \frac{V}{I} + \frac{F_n}{A} + \frac{M \cdot y}{I_{weld}}$$

500 SHEETS, FILLER 5 SQUARE
50 SHEETS EYE-EASE® 5 SQUARE
100 SHEETS EYE-EASE® 5 SQUARE
200 SHEETS EYE-EASE® 5 SQUARE
100 RECYCLED WHITE 5 SQUARE
200 RECYCLED WHITE 5 SQUARE
Made in U.S.A.
National® Brand

Loads on Weld – Top Due to Weight of Strongback

From Pt. B pg. 1

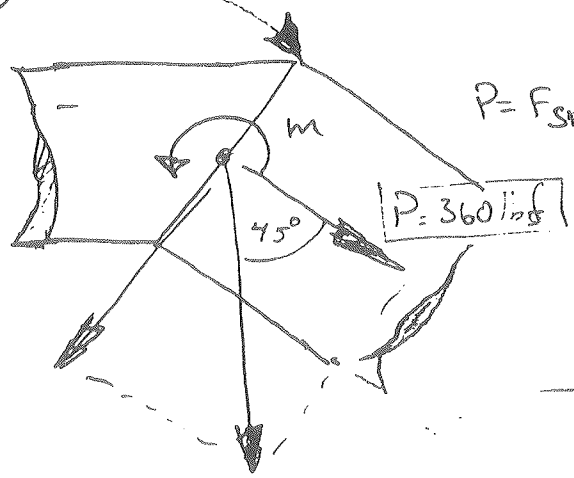

$P = F_{sin}\,45°$

$V = F_{cos}\,45°$

$V = 360\ lbf$

$m = \left(\frac{\Sigma W}{4} * X_{cg}\right)$

$m = \left(\frac{2037\ lbs}{4} \times 59''\right)$

$m = 8 \times 10^4\ in.lbs$

$F = \frac{2037\ lbs.}{4\ members}$

$F = 509\ lbf$

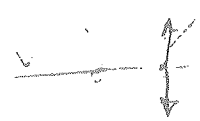

Loads on Weld – Bottom Due to Plates

Assumption: moment resisted to Outer Brace, no moment @ I-Beam

$\Sigma F_y = A_y - B_y - 9500\ lb = 0 \Rightarrow A_y = 9500\ lbs - B_y$

$\Sigma F_x = B_x + A_x = 0 \quad -B_x = A_x$

" " $= 9500\ lb. - (-21{,}000\ lbs)$

W16x40 inner Brace $\quad A_y = 31.5\ kips$

$\Sigma M_A = 0 \quad +B_y = 9500\left(\frac{21.5}{9.5}\right)$

$+\circlearrowleft$

$B_y = +21.5\ kips$

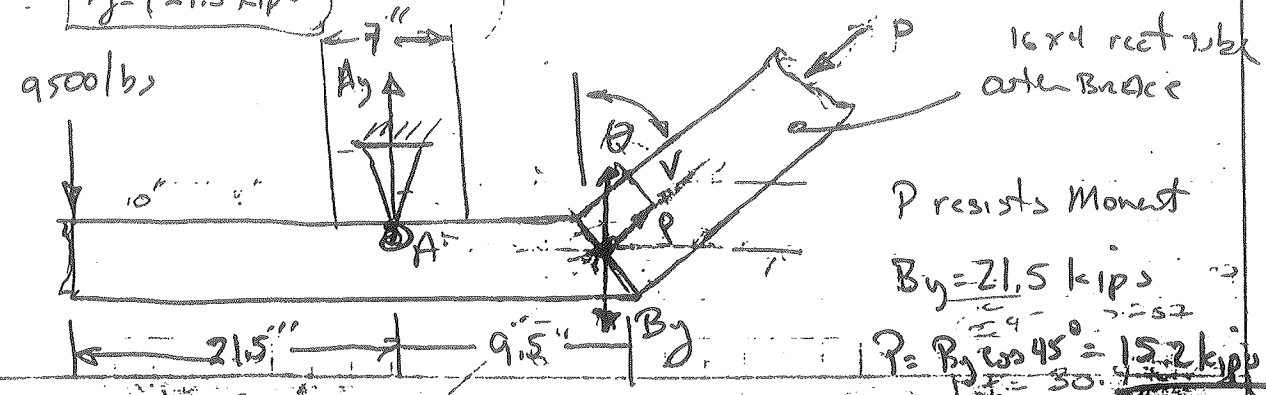

P resists Moment

$B_y = 21.5\ kips$

$P = B_y \cos 45° = 15.2\ kips$

$V = B_y \sin 45° = 15.2\ kips$

Case 2 Vertical.

$I_{yy} = 139 \text{ in}^4$

$A = 12.52 \text{ in}^2$

i) Torsional (from pg 3) $\tau_1 = 0.0124\, M_1$ //

$\tau_{Horz} = \tau_{vert}$

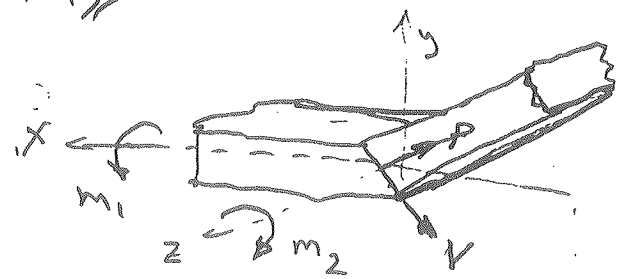

ii) Bending $I = 139 \text{ in}^4$

$$\tau_2 = \frac{M_2 c}{I} = \frac{M_2\, 2}{139} = 0.0144\, M_2 \;//$$

iii) Shear V

$$\tau_3 = \frac{V}{A} = \frac{V}{12.52} \;//$$

$A = 12.52 \text{ in}^2$

iv) Tensile/Compression Axial P

$$\tau_3 = \frac{P}{A} = \frac{P}{12.52} \;//$$

Assumptions for 1st Approx.

1) Neglect additional strength from Clip Angles.
2) Assume $M_1 \cong 0$ at weld - Let the I-Beam connection carry Torsion.
3) Moment M_2 is carried at thru weld, none thru Beam connection. Very conservative assumption since real case Beam carries most of Load.
4) Resolve M_2 into P & V for Truss Analysis.

Let $P = 15.2$ kips $V = 15.2$ kips

$$\tau = \left[\left(\frac{15.2 \text{ kips}}{12.52 \text{ in}^2}\right)^2 + \left(\frac{15.2 \text{ kips}}{12.52 \text{ in}^2}\right)^2\right]^{\frac{1}{2}} = 1.72 \text{ ksi} << S_y = 27 \text{ ksi}$$

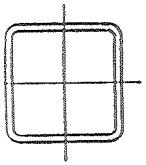

STRUCTURAL TUBING
Square
Dimensions and properties

Dimensions				Properties**					
nal* e	Wall Thickness		Weight per Ft	Area	I	S	r	J	Z
	In.		Lb.	In.^{2}	In.^{4}	In.^{3}	In.	In.^{4}	In.^{3}
4.5	0.2500	¼	13.91	4.09	12.1	5.36	1.72	19.7	6.43
	0.1875	3/16	10.70	3.14	9.60	4.27	1.75	15.4	5.03
4	0.5000	½	21.63	6.36	12.3	6.13	1.39	21.8	8.02
	0.3750	⅜	17.27	5.08	10.7	5.35	1.45	18.4	6.72
	0.3125	5/16	14.83	4.36	9.58	4.79	1.48	16.1	5.90
	0.2500	¼	12.21	3.59	8.22	4.11	1.51	13.5	4.97
	0.1875	3/16	9.42	2.77	6.59	3.30	1.54	10.6	3.91
3.5	0.3125	5/16	12.70	3.73	6.09	3.48	1.28	10.4	4.35
	0.2500	¼	10.51	3.09	5.29	3.02	1.31	8.82	3.70
	0.1875	3/16	8.15	2.39	4.29	2.45	1.34	6.99	2.93
3	0.3125	5/16	10.58	3.11	3.58	2.39	1.07	6.22	3.04
	0.2500	¼	8.81	2.59	3.16	2.10	1.10	5.35	2.61
	0.1875	3/16	6.87	2.02	2.60	1.73	1.13	4.28	2.10
2.5	0.3125	5/16	8.45	2.48	1.87	1.50	0.868	3.32	1.96
	0.2500	¼	7.11	2.09	1.69	1.35	0.899	2.92	1.71
	0.1875	3/16	5.59	1.64	1.42	1.14	0.930	2.38	1.40
2	0.3125	5/16	6.32	1.86	0.880	0.880	0.690	1.49	1.11
	0.2500	¼	5.41	1.59	0.766	0.766	0.694	1.36	1.00
	0.1875	3/16	4.32	1.27	0.668	0.668	0.726	1.15	0.840

Outside dimensions across flat sides.
Properties are based upon a nominal outside corner radius equal to two times the wall thickness.

STRUCTURAL TUBING
Rectangular
Dimensions and properties

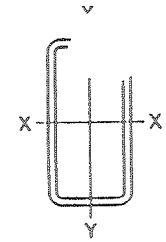

Dimensions				Properties**									
Nominal* Size	Wall Thickness		Weight per Ft	Area	X-X Axis				Y-Y Axis				J
					I_x	S_x	Z_x	r_x	I_y	S_y	Z_y	r_y	
In.	In.		Lb.	In.^{2}	In.^{4}	In.^{3}	In.^{3}	In.	In.^{4}	In.^{3}	In.^{3}	In.	In.^{4}
20×12	0.5000	½	103.30	30.4	1650	165	201	7.37	750	125	141	4.97	1650
	0.3750	⅜	78.52	23.1	1280	128	154	7.45	583	97.2	109	5.03	1270
	0.3125	5/16	65.87	19.4	1080	108	130	7.47	495	82.5	91.8	5.06	1070
20× 8	0.5000	½	89.68	26.4	1270	127	162	6.94	300	75.1	84.7	3.38	806
	0.3750	⅜	68.31	20.1	988	98.8	125	7.02	236	59.1	65.6	3.43	625
	0.3125	5/16	57.36	16.9	838	83.8	105	7.05	202	50.4	55.6	3.46	529
20× 4	0.5000	½	76.07	22.4	889	88.9	123	6.31	61.6	30.8	36.0	1.66	205
	0.3750	⅜	58.10	17.1	699	69.9	95.3	6.40	50.3	25.1	28.5	1.72	165
	0.3125	5/16	48.86	14.4	596	59.6	80.8	6.44	43.7	21.8	24.3	1.74	143
18× 6	0.5000	½	76.07	22.4	818	90.9	119	6.05	141	47.2	53.9	2.52	410
	0.3750	⅜	58.10	17.1	641	71.3	92.2	6.13	113	37.6	42.1	2.57	322
	0.3125	5/16	48.86	14.4	546	60.7	78.1	6.17	97.0	32.3	35.8	2.60	274
16×12	0.6250	⅝	110.36	32.4	1160	145	175	5.98	742	124	144	4.78	1460
	0.5000	½	89.68	26.4	962	120	144	6.04	618	103	118	4.84	1200
	0.3750	⅜	68.31	20.1	748	93.5	111	6.11	482	80.3	91.3	4.90	922
	0.3125	5/16	57.36	16.9	635	79.4	93.8	6.14	409	68.2	77.2	4.93	777
16× 8	0.5000	½	76.07	22.4	722	90.2	113	5.68	244	61.0	69.7	3.30	599
	0.3750	⅜	58.10	17.1	565	70.6	87.6	5.75	193	48.2	54.2	3.36	465
	0.3125	5/16	48.86	14.4	481	60.1	74.2	5.79	165	41.2	45.9	3.39	394
16× 4	0.5000	½	62.46	18.4	481	60.2	82.2	5.12	49.3	24.6	29.0	1.64	157
	0.3750	⅜	47.90	14.1	382	47.8	64.2	5.21	40.4	20.2	23.0	1.69	127
	0.3125	5/16	40.35	11.9	327	40.9	54.5	5.25	35.1	17.6	19.7	1.72	110
14×10	0.6250	⅝	93.34	27.4	728	104	127	5.15	431	86.2	101	3.96	885
	0.5000	½	76.07	22.4	608	86.9	105	5.22	361	72.3	83.6	4.02	730
	0.3750	⅜	58.10	17.1	476	68.0	81.5	5.28	284	56.8	64.8	4.08	564
	0.3125	5/16	48.86	14.4	405	57.9	69.0	5.31	242	48.4	54.9	4.11	477

*Outside dimensions across flat sides.
**Properties are based upon a nominal outside corner radius equal to two times the wall thickness.

(coefficients for web tear OUT. AISC. 4-8. sect)

Examine tube connection for Inner Brace to Bracket web tear

R_{BS} = Resistance to Block Shear, kips. (eqn 1)

$$R_{BS} = (C_1 + C_2) F_u t$$

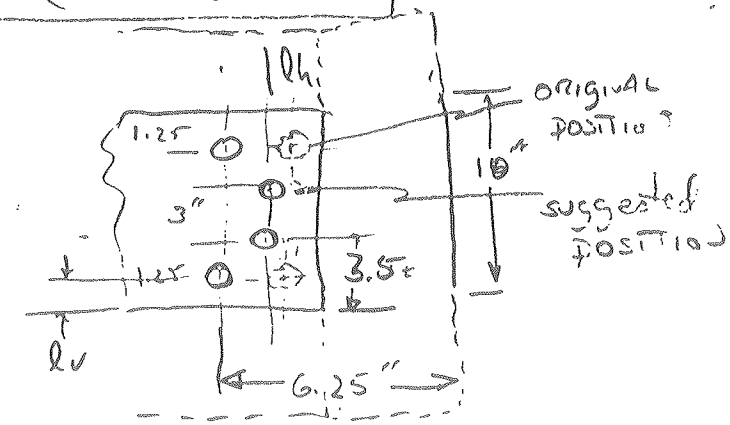

mat'l
A500Gr

$F_u = 58$ ksi

$F_y = 46$ ksi

$n = 2$

$t = 0.3125$

from Table 1.G Based on 3" spacing

$l_v = 1.25''$ $C_1 = 0.88$ use lh min value = 1"

$l_h = 0.374''$ ACTUAL $C_2 = 0.33$

$R_{BS} = (0.88 + 0.33)\ 58\text{ ksi}\ (0.3125)$

$= 22$ kips.

Look @ Load on Beam. max load = $\frac{1}{2}$ Dead Weight of Frame, & Plates. @ Centroid.

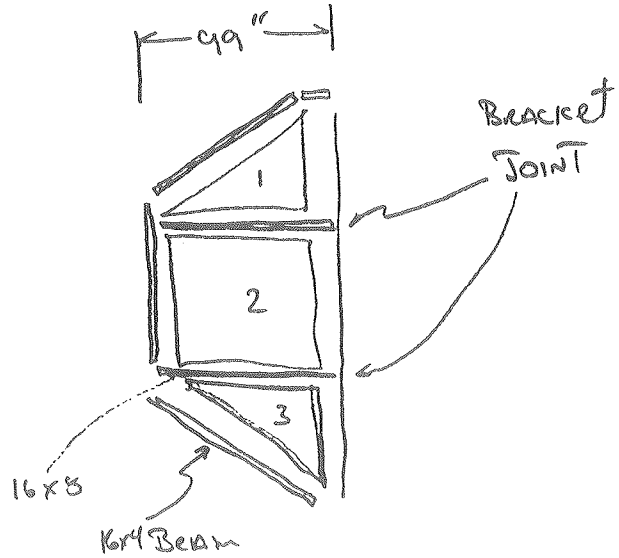

Beam Weight = 1359 lbs
Plate weight = 4918 lbs.
6277 lbs.

Centroid

	$\bar{x}$	$\bar{y}$	weight
Beam	111"	0"	1359
Plates	43"	0"	4918 lb.
			6277.

$$\bar{x} = \frac{\Sigma(\bar{x} \times w)}{w} = \frac{3.6\times10^5}{6277} = 58''$$

F = 6277/4 = 1570 ∴ Beam members share load.

So, loading on for Beam: F = 1570 / Beam

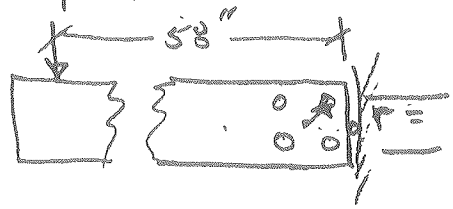

M = 91,060 in.lbs
V = 1570

for 1 bracket: $M' = \frac{M}{2} = 91{,}060/2 = 45{,}530$ in lbs.

$$V' = \frac{V}{2} = 1570/2 = 785 \text{ lbs}$$

LOAD per BOLT $n = 4$

Primary Shear BOLT $F' = \frac{V}{n} = \frac{735 \text{ lbsf}}{4} \cong 200 \text{ lbs}$.

$F'' = \frac{Mr}{\sum r_i^2}$ $F'' = \frac{M}{4r} = \frac{45{,}530}{4(4.5)} = 2529 \text{ lbsf}$

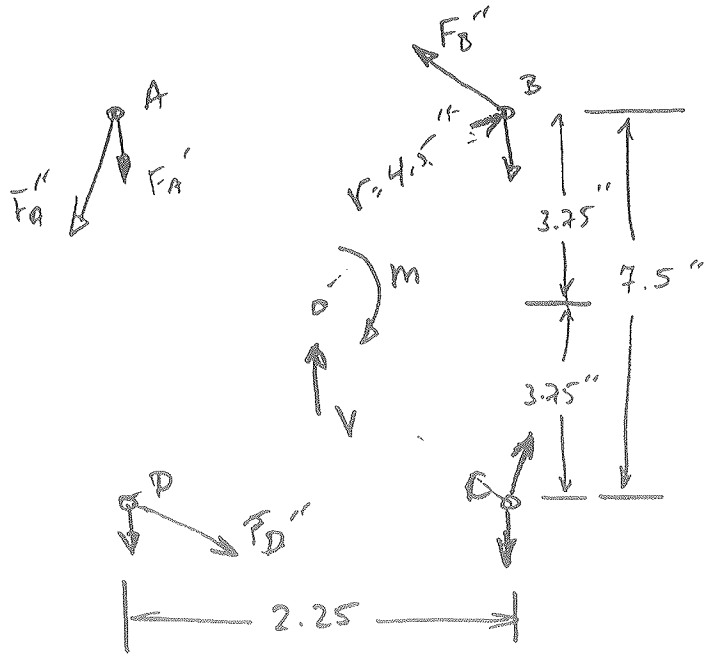

Look @ worst case where $F_A = F_A' + F_A'' = 200 \text{ lbs} + 2529 \text{ lbsf}$.
both F' & F'' ADD up.

$F_A = 2729 \text{ lbsf}$.

Look @ shear on Tube wall for Single Bolt where $x < 1.5D$.

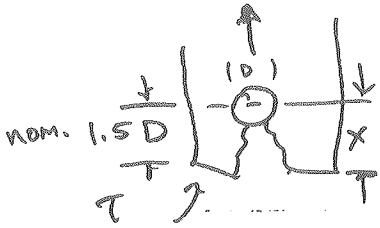

$P = \frac{F}{A}$ where

$A = tD = (0.3125 \times 0.75)$

$A = 0.23 \text{ in}^2$

$P = \frac{3314}{0.23} = 14{,}405 \text{ psi} \approx 14.4 \text{ ksi}$

$S_{sy} = 0.6 F_y = 27.6 \text{ ksi}$

$SF = \frac{S_{sy}}{\tau} = \frac{27.6}{14.4}$

$SF \cong 2.0$ 3.0

Let $x = 1.5D \approx 1.125''$

So Look e Load on Both Bolts Distributed Full Area.

note: Loads are worst case

shear Plane

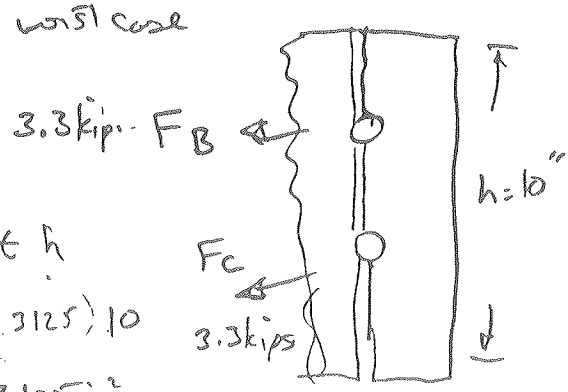

$A = t\,h$

$= (0.3125)\,10$

$= 3.125\ in^2$

$\sigma = \frac{F}{A} = \frac{6.6\ kips}{3.125\ in^2}$

$\sigma = 2.1\ ksi$

$S.F = \frac{S_{sy}}{\sigma} = \frac{27.6\ ksi}{2.1\ ksi}$

$\boxed{S.F = 13.14 \gg 3.0}$

<u>Bolt Safety Factor. Load on bolt</u>

$F_{BOLT\ MAX} = F' + F'' = 2529\ lbs\ F$

(with equal Spacing $r = 4.5''$) $\tau =$

Now, Look e New Centroid with New Bolt Spacing.

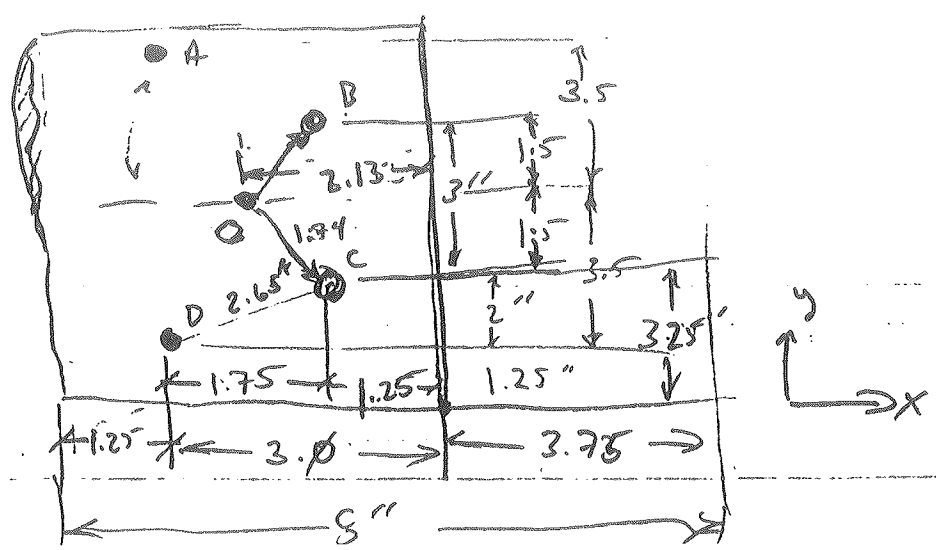

Centroid:

$$\bar{x} = \frac{A\left((1.25)2+(3.0)2\right)}{4A} = \frac{8.5}{4} = 2.125''$$

A = bolt Cross Section

$$A = \frac{\pi d^2}{4} = 0.442 \text{ in}^2$$

$$\bar{y} = 4.75''$$

MAX LOAD ON BOLT $F_B'' = \dfrac{M\, r_B}{(r_A^2 + r_B^2 + r_C^2 + r_d^2)} = \dfrac{45{,}530 \cdot (1.74'')}{32.1}$

$$\boxed{F_B'' \cong 2.47 \text{ kips}}$$

$r_a = 3.61''$

$r_b = 1.74''$

$r_c = 1.74''$

$r_d = 3.61''$

$$\Sigma r_i = 2(3.61)^2 + 2(1.74)^2 = 32.1$$

(recall $F_B = 2529$ lbs previously before relocation)

$$\boxed{F_A = \frac{45{,}530\,(3.61)''}{32.1} = 5.12 \text{ kips}}$$

So max resultant load on bolts. - F_A is max case.

$$F_A = F' + F'' = 0.8 \text{ kips} + 5.1 \text{ kips}$$

Let $\theta = 0$ ∴ $F_A \cong 6$ kips.

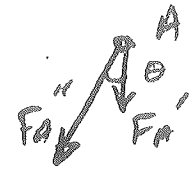

Bolt Shear Stress $\tau = \dfrac{F}{A_s} = \dfrac{6 \text{ kips}}{0.442} = 13.6$ ksi.

Bearing Stress on Tube $\sigma = \dfrac{F}{A_b} = \dfrac{6 \text{ kips}}{(0.313)(0.75)} = 25.6$ ksi

$A_b = tD$

$$S.F. = \frac{S_{sy}}{25.6} = \frac{0.6 F_y}{25.6}$$

This is local stress and only if slip condition. Using it. Most of load by Plate Friction.

Load of Bracket on Web.

No Torsion Loads - only Shear V & moment M

vecall V = 755 lbs Per Beam

M = 45,530 in-lbs

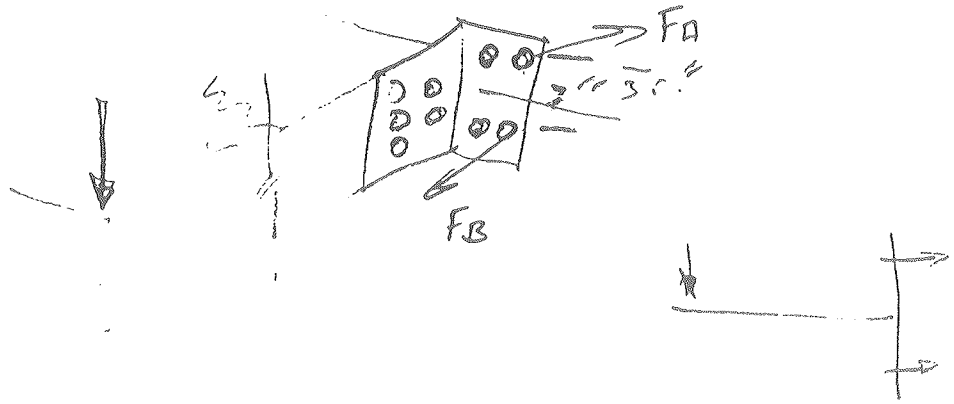

Load on Bolt - Due to moment M

$M_A = \frac{45,530 \text{ in-lbs}}{3.5''} = 13 \text{ kips}$ + Axial Load. for 4 bolts.

$F_A'' = 13 \text{ kips}/4 = 3250 \text{ kips/Bolt}$

$F_A' = 755 \text{ lbs}/8 \text{ bolts} \therefore F_A' = 98 \text{ lbs/Bolt}$

$F_A = F_A' + F_A'' = 3250 + 98 \approx 3.4 \text{ kips}$

LAWRENCE LIVERMORE LABORATORY - UNIVERSITY OF CALIFORNIA

ENGINEERING NOTE

SUBJECT: DETAIL D BOTTOM BRACKET	FILE NO.	PAGE 1/6
	NAME: ALAIN INUGAI	
	DATE: 8/20/97	

FIGURE 1

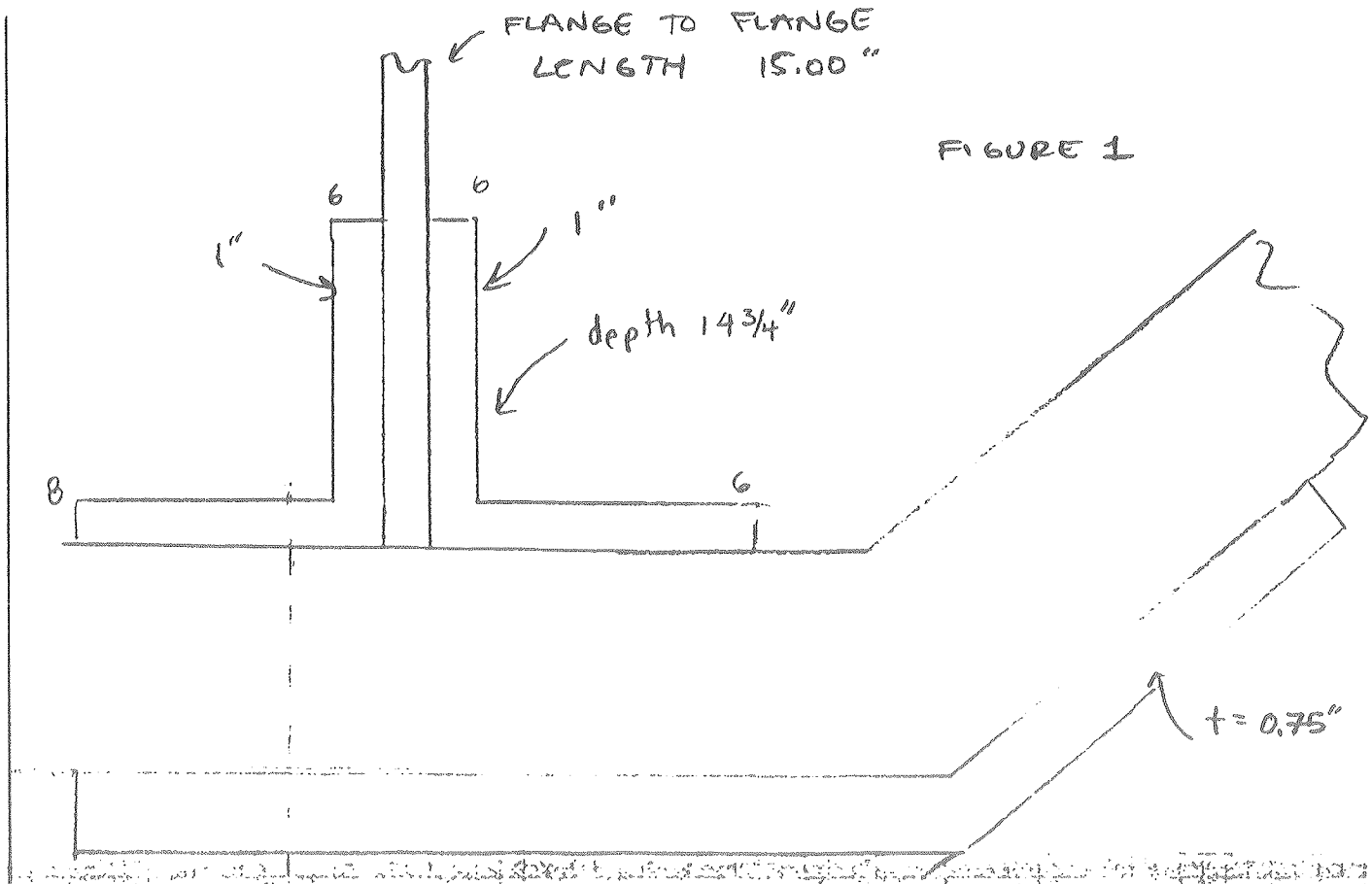

FIGURE 2

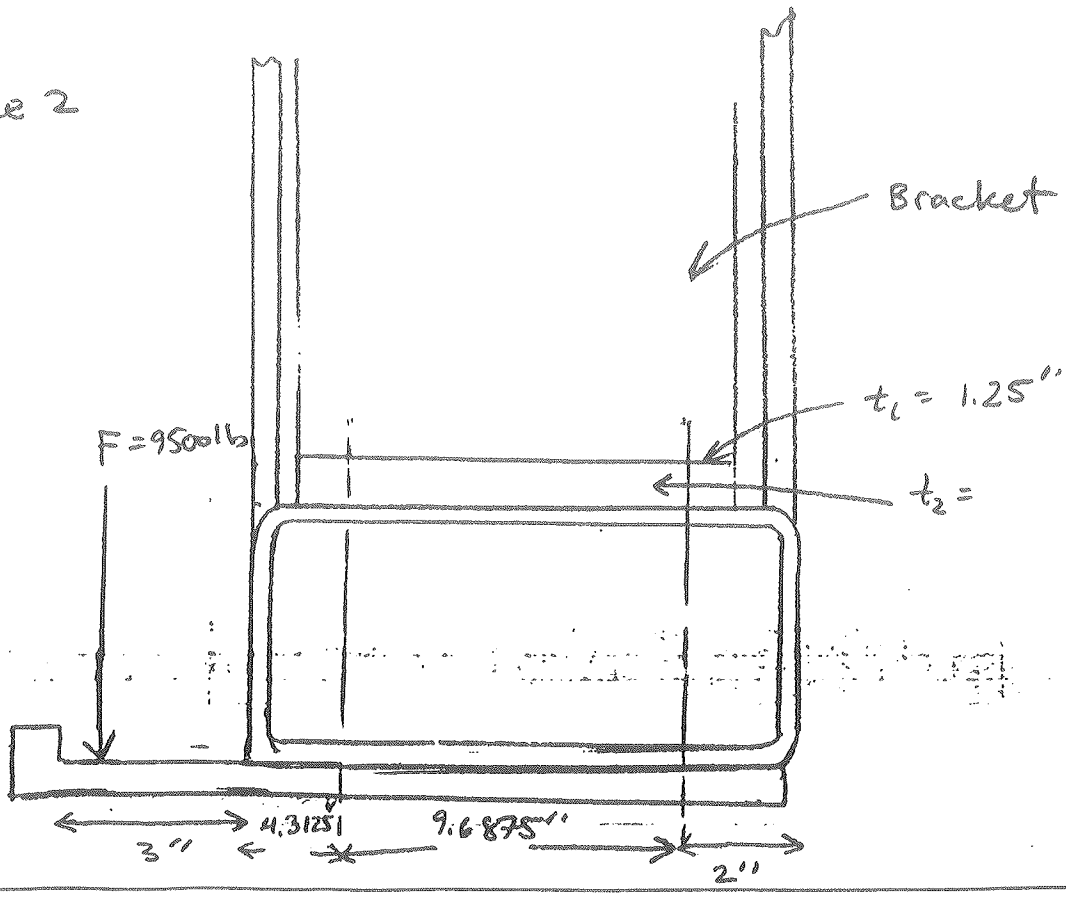

DIETERICH POS. ... ORDER NO 149953

THE 90° BRACKETS ARE CRITICAL TO THE BOTTOM BRACKET DESIGN

WE FIND THE STRESSES IN THE BOLTS (SEE FIGURE 2)

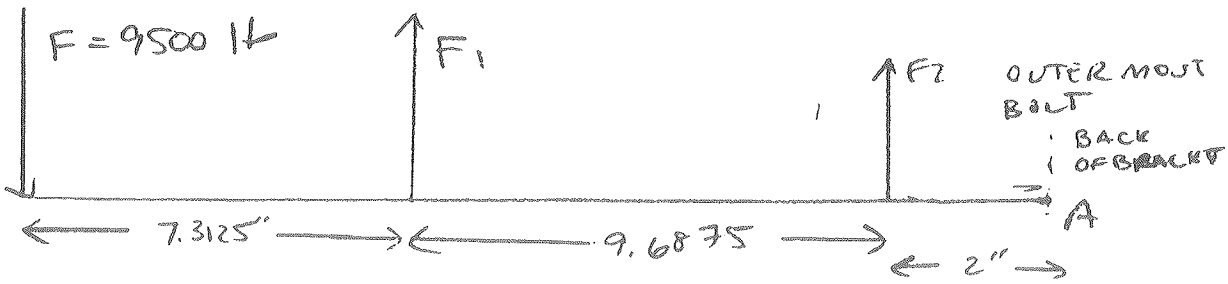

$$\Sigma M_A = 0 = 19(F) - F_1(11.6875") - F_2(2")$$

$$\Sigma F_y = F - F_1 - F_2 = 0$$

$$180500 \text{ lb-in} = F_1(11.6875) + (F - F_1)\,2"$$

$$F_1 = 11800 \text{ lb}/2_{\text{bolts}} = 5900 \text{ lb}$$

$$F_2 = -2300 \text{ lb}/2_{\text{bolts}} = 1150 \text{ lb}$$

3/4-10 Grade 8 Bolts $\Rightarrow F_{max} = 43138$ lb

Grade 5 Bolts $F_{max} = 30528$ lb

DER NO 144953

DIETERICH POS.

CHECK BENDING STRESS IN 1" BRACKETS. USE BEAM THEORY TO GET M AT BRACKET.

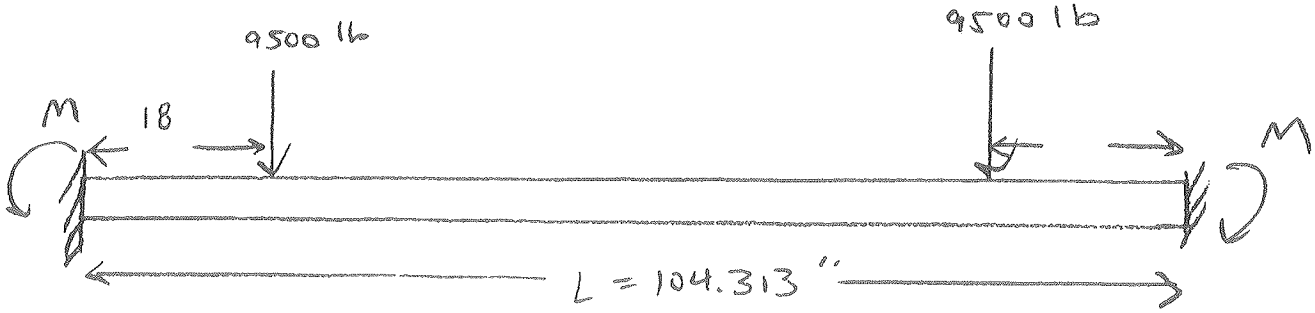

FIND M. $a = 18''$ $b = L - a$

$$M = \frac{Fab^2}{L^2} + \frac{Fa^2b}{L^2}$$ (From Shigley & Mischke pg. 742)

$$= \frac{9500\,\text{lb}\left[(18'')(86.313'')^2 + 18^2(86.313)\right]}{(104.313)^2}$$

$$= 141\,493 \text{ lb-in}$$

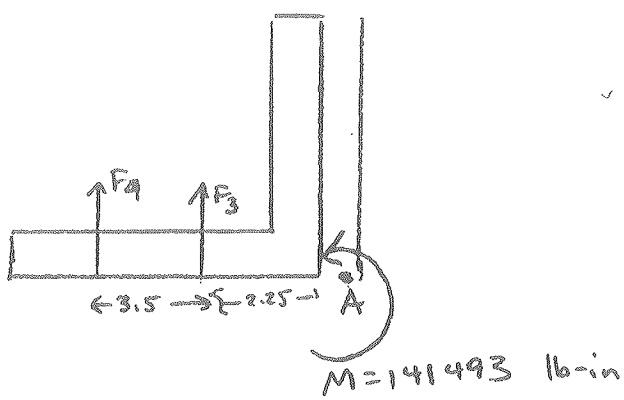

MOMENTS ABOUT POINT A

$$\Sigma M = 0 = M - F_3(2.25'') + F_4(5.75)$$

$$\Sigma F_y = 0 = F_3 + F_4 - 9500$$

$$\Rightarrow F_4 = 15015 \quad F_3 = 6015$$

DIETERICH POSTER JER NO 144953

MUST DIVIDE THIS AMONG 4 BOLTS

SO WE HAVE $F_3 = 1504$ lb $F_4 = 3754$ lb

MAX BOLT FORCE $= F_1 + F_4 = 9654$ lb

$$S.F. \text{ GRADE } 8 = \frac{43138 \text{ lb}}{9654 \text{ lb}} = 4.5 \checkmark \text{ OK}$$

CHECK BENDING STRESS IN BRACKET

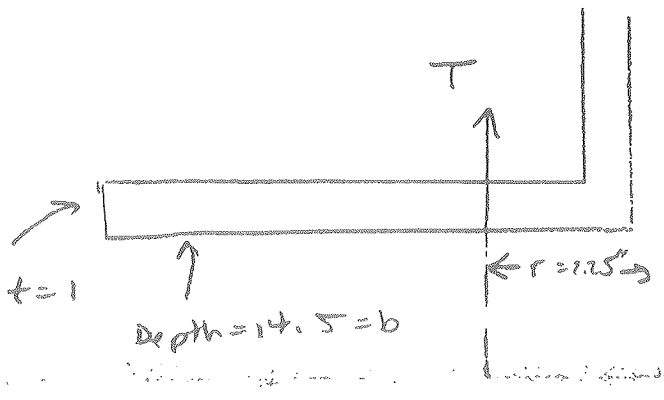

$T = F_1 + F_3$

$= 5900 + 1504$

$= 7404$ lb

$$I = \frac{bt^3}{12} = \frac{(14.5)(1)^3}{12} = 1.208 \text{ in}^4$$

$c = t/2 = 0.5$

$M = Tr = 16659$ lb-in

$$\sigma = \frac{Mc}{I} = \frac{16659 \text{ lb-in } (0.5'')}{1.208 \text{ in}^4}$$

$= 6895$ psi

$$S.F = \frac{36000}{6895} = 5.2 \checkmark \text{ OK}$$

DIETERICH POST REC...ER NO 144953

CHECK BLOCK SHEAR RESISTANCE

FROM AISC MANUAL OF STEEL CONSTRUCTION: ALLOWABLE STRESS DESIGN Ninth Edition pg 4-8.

R_{BS} = RESISTANCE TO BLOCK SHEAR

$= (C_1 + C_2) F_u t$

C_1 & C_2 are FROM TABLE 1-6

$C_1 = 1.00''$
for $l_v = l_h = 1.25$

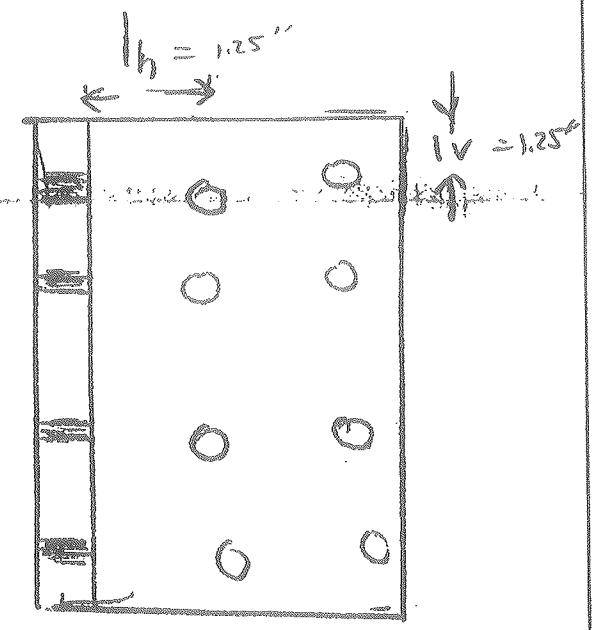

$C_2 = 1.64''$
For $n = 4$

FOR TUBE BLOCK SHEAR

$R_{BS} = (1.00'' + 1.64'')(46\ ksi)(.3125'')$

$= 37.95$ kips

FOR WEB $n = 3 \Rightarrow C_2 = 0.99''$

$R_{BS} = (1.00'' + 0.99)(46\ ksi)(.305'')$

$= 29.9$ kips

MAX FORCE ON TUBE 9.654 KIPS < 37.95 KIPS

$SF = \frac{37.95}{9.654} = 3.9$ ✓ OK

JER NO 144953
DIETERICH POST

CHECK BEARING STRESS & BLOCK SHEAR FOR I BEAM

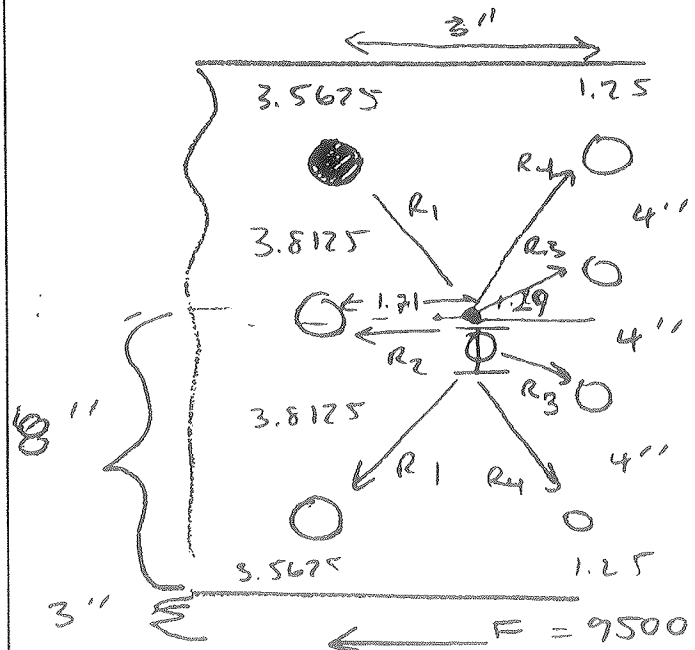

$R_1 = (1.71^2 + 3.8125^2)^{1/2} = 4.18$ in

$R_2 = 1.71$ in

$R_3 = (1.29^2 + 2^2)^{1/2} = 2.38$ in

$R_4 = (1.29^2 + 6^2)^{1/2} = 6.14$ in

BEARING STRESS AREA

$A_B = D(t_{web} + 2t_{brackets})$

$= 3/4''(.305 + 2(1.0''))$

$= 1.72875 \text{ in}^2$

$\longleftarrow F = 9500$ lb

F CAUSES MOMENT

M AT CENTROID Φ

$= M = 11'' F = 104500$ lb-in

$$F' = \frac{F}{n} = 1357 \text{ lb}$$

$$F'' = \frac{M r_4}{\sum_{i=1}^{4} r_i^2} = \frac{104500\,(6.14)}{2(4.18)^2 + 1.71^2 + 2(2.38)^2 + 2(6.14)^2} = \frac{104500 \text{ lb-in}(6.14'')}{124.60 \text{ in}^2}$$

$$= 5150 \text{ lbs}$$

$F_{MAX} = 6507$ lb

BLOCK SHEAR IN WEB

$R_{BS} = 29.9$ kips > 6507 lb ✓

$$\boxed{SF = \frac{29.9}{6.507} = 4.6}$$

$$\text{BEARING STRESS} = \frac{F}{A_B} = \frac{6507 \text{ lb}}{1.72875 \text{ in}^2} = 3764 \text{ psi}$$

$$\boxed{SF = \frac{36000 \text{ psi}}{3764 \text{ psi}} = 9.6}$$ ✓

DIETERICH POSTER ORDER NO 144953

7600-54257 LL-398 (REV. 8/71)

Lifting Analysis for Strongback

- Weld fixtures place on sides of strongback
- Lateral beams to solid pieces
- Lateral beams from regular I Beam to wide flange
- Beam brackets Thickness from 1/2" to 3/4"
- More brackets Added
- Bracket bolts upgraded to 3/4"-10

SUBJECT: MAIN VERTICAL BEAMS

NAME: Alain Inugai

DATE

Suppose we lift at the top of the strong back instead of at the ears what beams can we use.

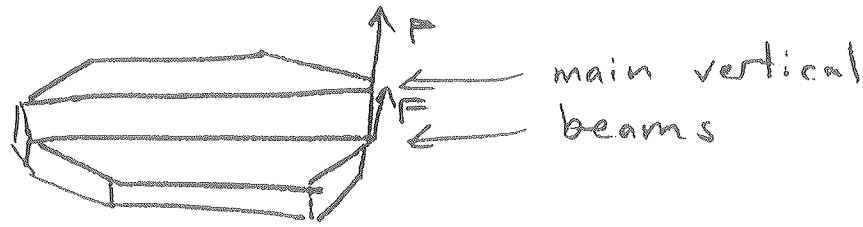

What is the total force required on each end to lift the strong back & plates (Total weight 30,150 lbs)

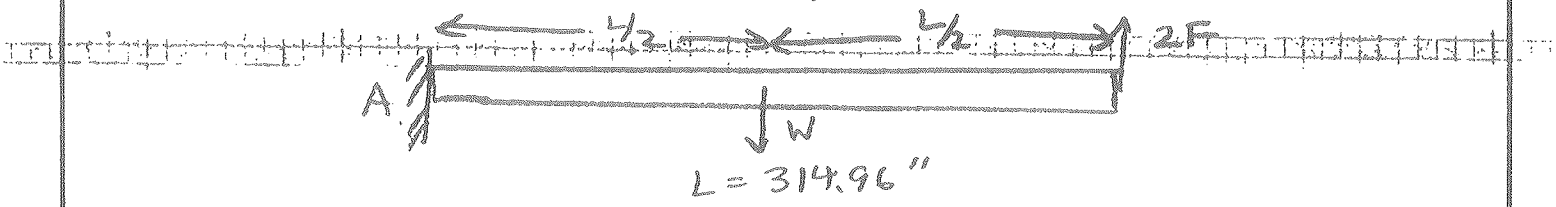

$$\Sigma M_A = -W\frac{L}{2} + 2FL = 0$$

$$\Rightarrow F = W/4 = 7538 \text{ lb}$$

We use a regular beam

$I_x = 122.1 \text{ in}^4$ $\quad I_y = 6.9 \text{ in}^4$ $\quad c = 5''$

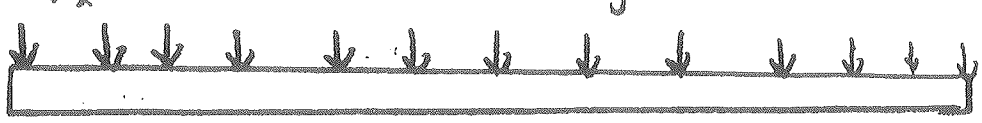

Distribute F over the length of beam,

$$w = \frac{F}{L} = 23.93 \text{ lb/in}$$

LAWRENCE LIVERMORE LABORATORY - UNIVERSITY OF CALIFORNIA

ENGINEERING NOTE | MINOS | FILE NO. | PAGE

SUBJECT: MAIN VERTICAL BEAMS

NAME: ALAIN INUGAI

DATE:

$$M_{max} = \frac{wL^2}{8} = \frac{23.93 \text{ lb-in } (314.96'')^2}{8} = 296\,751 \text{ psi}$$

$$\sigma_{max} = \frac{296751 \text{ psi } 5''}{122.1} \quad 12152 \text{ psi}$$

SF 2.96

If we use wide flange beams

$I_{xx} = 272.9 \text{ in}^4 \quad I_y = 93 \text{ in}^4$

$$\sigma_{max} = \frac{296751 \text{ psi} \times 5''}{272.9 \text{ in}^4} = 5437 \text{ psi}$$

~~SF = 6.62~~

Using Top lifting points is recommended for beam strength (shown in preceding calculations), for its greater restoring force and less moment transfer from lifting attachment to the strong back.

NOTE: wide flange weighs 49 lb/ft
normal weighs 25.4 lb/ft

extra weight = 1240 lbs

For lateral or vertical

LL-398-2 (REV.

LAWRENCE LIVERMORE LABORATORY - UNIVERSITY OF CALIFORNIA

ENGINEERING NOTE

MINOS

FILE NO.

PAGE

SUBJECT: Lifting Fixtures (Top)

NAME: Alain Inegni

DATE

Option 1 Tall beam

Take F = ½ TOTAL WEIGHT

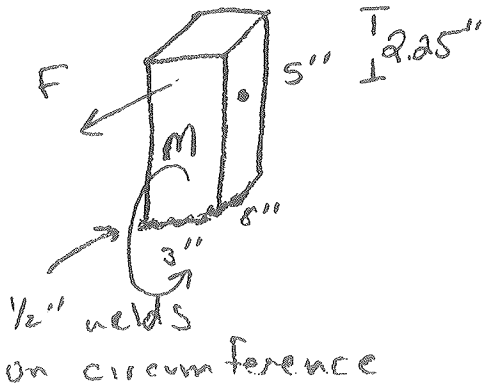

$F = 15270$ lbf

$M = 2.25 \times F$

$= 33900$ lb-in

$A = 3 \times 8 = 24 \text{ in}^2$

$I = \frac{bh^3}{12} = 128 \text{ in}^4$

$\tau = \frac{F}{A} = 628$ psi

$\sigma = \frac{mc}{I} = \frac{33900\,(2.5'')}{128} = 662$ psi

$\sigma_1, \sigma_2 = \frac{\sigma}{2} \pm \left[\left(\frac{\sigma}{2}\right)^2 + \tau^2\right]^{1/2} = \begin{matrix}\sigma_1 = 1041 \text{ psi} \\ \sigma_2 = -379 \text{ psi}\end{matrix}$

$\sigma_{vm} = \sqrt{\sigma_1^2 - \sigma_1\sigma_2 + \sigma_2^2} = 1274$ psi

$SF = \frac{36000}{1274} = 28.3$

Welds

$A = 1.414\,h(b+d)$

$I_u = \frac{d^2}{6}(3b+d)$

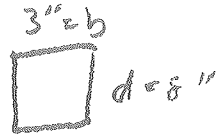

$A = 7.78 \text{ in}^2$

$I_u = 181.33 \text{ in}^3$

$I = .707\,h\,I_u = 64 \text{ in}^4$

$\tau' = \frac{F}{A} = 1957$ psi

$\sigma = \frac{mc}{I} = \frac{30900 \times 4}{64} = 2120$ psi

$\sigma_{vm} = (\sigma^2 + 3\tau^2)^{1/2} = 3969$ psi

SF = 9.1 ✓ ok

LL-338-2 (REV.

LAWRENCE LIVERMORE LABORATORY - UNIVERSITY OF CALIFORNIA

ENGINEERING NOTE

Minus

FILE NO. | PAGE

SUBJECT: Lifting Fixtures (Top)

NAME: Alain Iraga

DATE

Option 2: Long beam

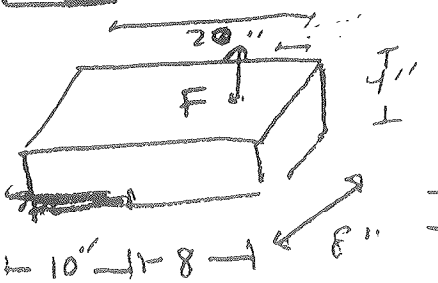

$F = 7538$

$M = F \times 15.5'' = 116840$ lb-in

$I = \frac{bd^3}{12} = 42.7 \text{ in}^4$

$$\sigma = \frac{Mc}{I} = \frac{116840 \text{ lb-in } (2'')}{42.7 \text{ in}^4} = 5472 \text{ psi}$$

$$\tau = \frac{V}{A} = \frac{7538 \text{ lb}}{4'' \times 8''} = 236 \text{ psi}$$

$$\sigma_{1,2} = \frac{\sigma_x}{2} \pm \sqrt{\left(\frac{\sigma_x}{2}\right)^2 + \tau_{xy}^2} \Rightarrow \sigma_1 = 5480 \text{ psi}, \quad \sigma_2 = -10 \text{ psi}$$

$$\sigma_{vm} = \sqrt{\sigma_1^2 - \sigma_1\sigma_2 + \sigma_2^2} = 5481 \text{ psi}$$

$$SF = \frac{36000}{5481} = 6.6 \checkmark \text{ ok}$$

Welds (From Shigley & Mischke pg 396-397)

$h = 1/2''$, $b = 8''$, $d = 10''$

$$A = 0.707\, h(b + 2d) = 9.898 \text{ in}^2$$

$$\bar{y} = \frac{d^2}{b + 2d} = 3.57''$$

$$I_u = \frac{2d^3}{3} - 2d^2\bar{y} + (b + 2d)\bar{y}^2$$

$$= 666.7 - 714 + 427.1 = 379.8 \text{ in}^3$$

$$I = .707\, h\, I_u = 134 \text{ in}^4$$

$$\tau = \frac{7540 \text{ lb}}{9.898 \text{ in}^2} = 762 \text{ psi}$$

LL-398-2 (REV.

SUBJECT: Lifting Fixtures (Top)

NAME: ALAIN INUGAI

DATE:

Option 2 cont.

$$\sigma = \frac{Mc}{I} = \frac{116840 \text{ lb-in} \times 4''}{134 \text{ in}^4} = 3488 \text{ psi}$$

$$\sigma_{vm} = (\sigma^2 + 3\tau^2)^{1/2} = 3730 \text{ psi}$$

(PG 251 Shigley)

SF = 9.7 ✓ OK

LAWRENCE LIVERMORE LABORATORY - UNIVERSITY OF CALIFORNIA

ENGINEERING NOTE

MINOS

FILE NO.

PAGE

SUBJECT: Beam Brackets (TOP LOADING)

NAME: Alain Inuga.

DATE

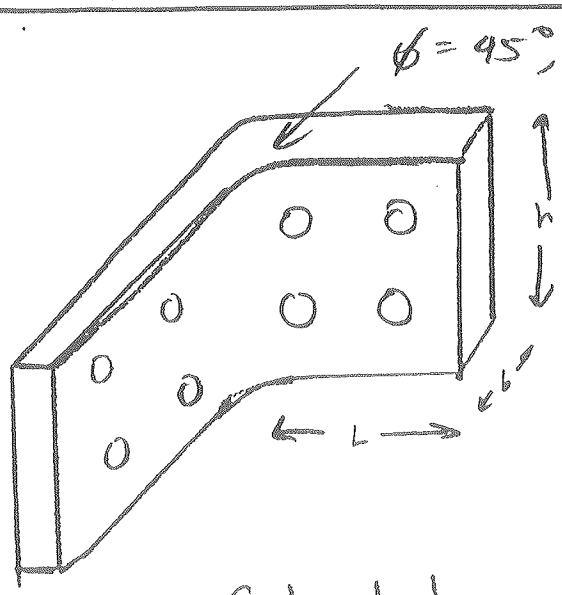

Bracket thickness = 3/4"

L = 7.0

h = 7.874

b = 3/4"

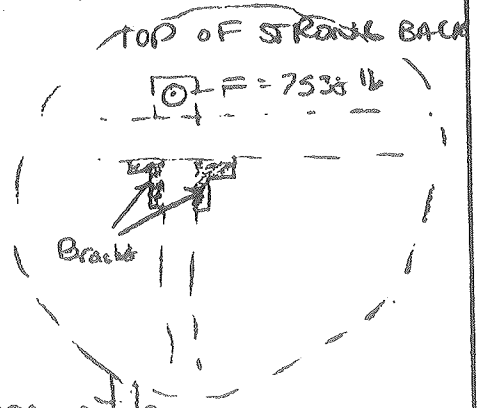

Calculate Material Strength

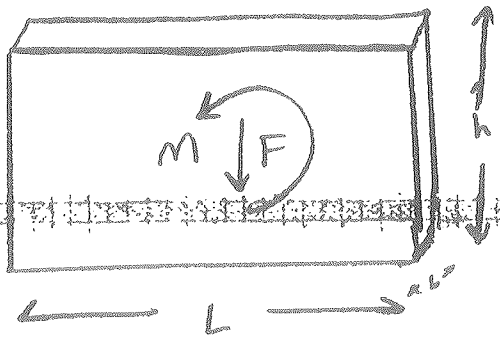

F = 7538 lb

M = 33900 lb-in

at top due to lifting

$I = \frac{bh^3}{12} = \frac{3/4"(7.874)^3}{12} = 30.5 \text{ in}^4$

$c = \frac{h}{2} = 3.937"$

$\sigma = \frac{Mc}{I} = 4374 \text{ psi}$

$\tau = \frac{F}{A} = \frac{7538}{3/4" \times 7.874} = 1277 \text{ psi}$

$\sigma_1, \sigma_2 = \frac{\sigma}{2} \pm \sqrt{\left(\frac{\sigma}{2}\right)^2 + \tau^2} \Rightarrow \sigma_1 = 4720 \text{ psi}, \ \sigma_2 = -346 \text{ psi}$

$\sigma_{VM} = \sqrt{\sigma_1^2 - \sigma_1\sigma_2 + \sigma_2^2} = 4902 \text{ psi}$

$SF = \frac{36000}{4902} = 7.3$ ✓ok

LL-330-2 (REV.

LAWRENCE LIVERMORE LABORATORY - UNIVERSITY OF CALIFORNIA

ENGINEERING NOTE

MIN03

FILE NO. | PAGE

SUBJECT: Beam Brackets (TOP Loaded)

NAME: Alain Imagoni

DATE:

BOLTS see Shigley p. 362-363

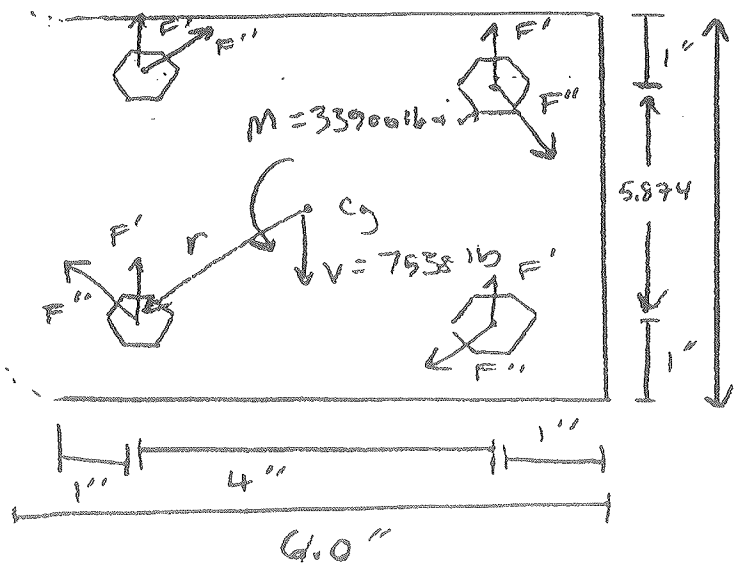

BOLTS

3/4"-10

7.874" Tensile stress area

.3318 in²

	Yield strength (psi)	Yield strength (lb)
Grade 2	57000	18,914
Grade 5	92 000	30,528
Grade 8	130 000	43 138

$$r = \sqrt{\left(\frac{5.874}{2}\right)^2 + \left(\frac{4}{2}\right)^2} = 3.58 \text{ in}$$

TOTAL FORCE ON A BOLT

$$\vec{F} = \vec{F}' + \vec{F}''$$

$$F' = \frac{V}{n} \qquad n = \text{number of bolts}$$

$$F'' = \frac{M}{4r}$$

$$F' = \frac{7538}{4} = 1885 \text{ lb}$$

$$F'' = \frac{33900 \text{ lb-in}}{4(3.58")} = 2367 \text{ lb}$$

Worst resultant force on 2 left bolts

$$(2367)^2 = F^2 + 1885^2 - 2F(1885)\cos 45^\circ$$

$$0 = F^2 - 3770F - 2049464$$

$$F = \frac{3770 + \sqrt{3770^2 + 4(2049464)}}{2} = 4252 \text{ lb}$$

$$SF_{Grade\ 2} = \frac{18914}{4252} = 4.4$$

LL-308-2 (REV.

LAWRENCE LIVERMORE LABORATORY - UNIVERSITY OF CALIFORNIA

ENGINEERING NOTE

MINOS

FILE NO.

PAGE

SUBJECT: Beam Brackets (TOP LOADED)

NAME: Alain Inugai

DATE

If we weld we have

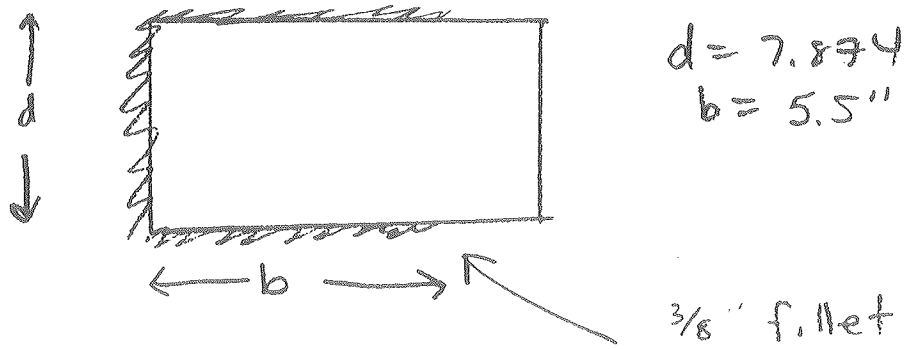

$d = 7.874$

$b = 5.5''$

$F = 7538\ lb$

$M = 33900\ lb\text{-}in$

From Shigley (391-392)

$A = .707h(2b+d) = 5.00\ in^2$

$$J_u = \frac{8b^3 + 6bd^2 + d^3}{12} - \frac{b^4}{2b+d}$$

$$= 322.01 - 48.48 = 273.53\ in^3$$

$$J = .707h\,J_u = 72.5\ in^4$$

$r = 3.937''$

$$\tau_1 = \frac{F}{A} = \frac{7538}{5.00} = 1508\ psi$$

$$\tau_2 = \frac{Mr}{J} = \frac{33900\ lb\text{-}in\ (3.937'')}{72.5\ in^4} = 1840\ psi$$

$$\tau_{max} = 3348\ psi$$

$$SF = \frac{36000}{\sqrt{3}\,(3348\ psi)} = 6.2 \quad \checkmark\ ok$$

LL-338-2 (REV.

LAWRENCE LIVERMORE LABORATORY - UNIVERSITY OF CALIFORNIA

ENGINEERING NOTE | MINOS | FILE NO. | PAGE

SUBJECT: Lifting Rings

NAME: Alain Iwugai

DATE

Option 1: Swivel Hoist Rings

Pivots 180° & swivels 360° making lifting easy

From Carr Lane CL-10000-SMR.3

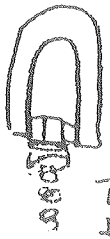

1.5" of 1" rope THREAD

Rated load 10,000 lbs with SF 5.0

Max Force is 9500 lbs

SF on man. rating 0.66

SF on yield 3.32 ✓OK

Option 2: Forged Shackles

From crosby group. Pivots 180°. Less versatile. Spreader bar or other device necessary.

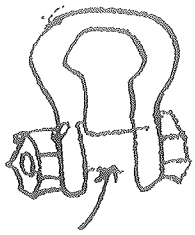

d = 2 in

Bolt type anchor shackles

Rated load = 25 tons

Proof load 2.2 Ultimate 6.0

SF on manufacturers rated load = 3.32 ✓OK

SF on proof = 7.3 ✓OK

LL-308-2 (REV.

LAWRENCE LIVERMORE LABORATORY - UNIVERSITY OF CALIFORNIA

ENGINEERING NOTE | MINOS | FILE NO. | PAGE

SUBJECT: MAIN VERTICAL BEAMS

NAME: ALAIN INUGAI

DATE:

$$M_{max} = \frac{wL^2}{8} = \frac{23.93 \text{ lb-in } (314.96'')^2}{8} = 296\,751 \text{ psi}$$

$$\sigma_{max} = \frac{296751 \text{ psi } 5''}{122.1} \quad 12152 \text{ psi}$$

SF 2.96

If we use wide flange beams

$I_{xx} = 272.9 \text{ in}^4 \quad I_y = 93 \text{ in}^4$

$$\sigma_{max} = \frac{296751 \text{ psi} \times 5''}{272.9 \text{ in}^4} = 5437 \text{ psi}$$

SF = 6.62

Using Top lifting points is recommended for beam strength (shown in preceding calculations), for its greater restoring force and less moment transfer from lifting attachment to the strong back.

NOTE: wide flange weighs 49 lb/ft
normal weighs 25.4 lb/ft

extra weight = 1240 lbs

For lateral or vertical

LL-338-2 (REV.)

LAWRENCE LIVERMORE LABORATORY - UNIVERSITY OF CALIFORNIA

ENGINEERING NOTE

MINOS

FILE NO. | PAGE

NAME: Alain Iwaguro

DATE

SUBJECT: Lifting Fixtures (Top)

Option 1 Tall beam

Take F = ½ TOTAL WEIGHT

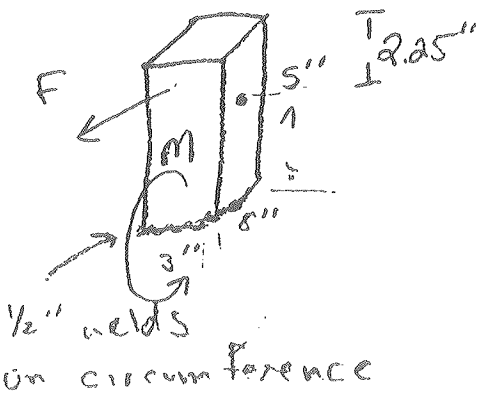

$F = 15070$ lbf

$M = 2.25 \times F = 33900$ lb-in

$A = 3 \times 8 = 24$ in^2

$I = \frac{bh^3}{12} = 128$ in^4

$\tau = \frac{F}{A} = 628$ psi

$\sigma = \frac{Mc}{I} = \frac{33900\,(2.5")}{128} = 662$ psi

$\sigma_1, \sigma_2 = \frac{\sigma}{2} \pm \left[\left(\frac{\sigma}{2}\right)^2 + \tau^2\right]^{1/2} = \sigma_1 = 1041$ psi, $\sigma_2 = -379$ psi

$\sigma_{vm} = \sqrt{\sigma_1^2 - \sigma_1\sigma_2 + \sigma_2^2} = 1274$ psi

$SF = \frac{36000}{1274} = 28.3$

Swivel eye Bolt hole

Welds

$A = 1.414\,h(b+d)$ $\quad h = \frac{1}{2}$" fillet

$J_u = \frac{d^2}{6}(3b+d)$

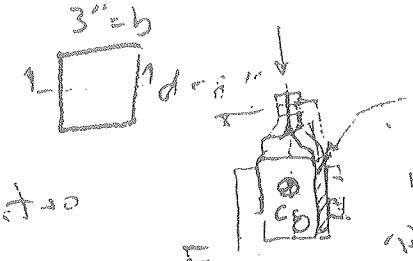

compare to Bolted Bracket to 10x6 beam

$A = 7.78$ in^2 $\quad \tau' = \frac{F}{A} = 1957$ psi

$J_u = 181.33$ in^3 $\quad \sigma = \frac{Mc}{I} = \frac{30900 \times 4}{64} = 2120$ psi

$I = .707\,h\,J_u = 64$ in^4

$\sigma_{vm} = (\sigma^2 + 3\tau^2)^{1/2} = 3969$ psi

SF = 9.1 ✓ ok

LL-398-2 (REV. 1

LAWRENCE LIVERMORE LABORATORY - UNIVERSITY OF CALIFORNIA

ENGINEERING NOTE

Minus

FILE NO. | PAGE

SUBJECT: Lifting Fixtures (Top)

NAME: Marin Tuga

DATE

Option 2: Long beam

$F = 7538$

$M = F \times 15.5'' = 116840$ lb-in

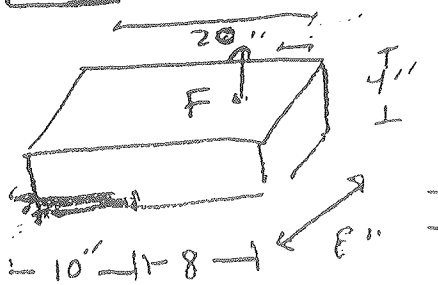

$I = \frac{bh^3}{12} = 42.7 \text{ in}^4$

$$\sigma = \frac{Mc}{I} = \frac{116840 \text{ lb-in } (2'')}{42.7 \text{ in}^4}$$

$$= 5470 \text{ psi}$$

$$\tau = \frac{V}{A} = \frac{7538 \text{ lb}}{4'' \times 8''} = 236 \text{ psi}$$

$$\sigma_{1,2} = \frac{\sigma_y}{2} \pm \sqrt{\left(\frac{\sigma_y}{2}\right)^2 + \tau_{xy}^2} \Rightarrow \sigma_1 = 5480 \text{ psi}, \quad \sigma_2 = -10 \text{ psi}$$

$$\sigma_{VM} = \sqrt{\sigma_1^2 - \sigma_1\sigma_2 + \sigma_2^2} = 5481 \text{ psi}$$

$$SF = \frac{36000}{5481} = 6.6 \checkmark \text{ OK}$$

Welds (From Shigley & Mischke pg 396-397)

$h = 1/2''$, $b = 8''$, $d = 10''$

$$A = 0.707\, h(b + 2d) = 9.898 \text{ in}^2$$

$$\bar{y} = \frac{d^2}{b + 2d} = 3.57''$$

$$I_u = \frac{2d^3}{3} - 2d^2\bar{y} + (b + 2d)\bar{y}^2$$

$$= 666.7 - 714 + 427.1 = 379.8 \text{ in}^3$$

$$I = .707\, h\, I_u = 134 \text{ in}^4$$

$$\tau = \frac{7540 \text{ lb}}{9.898 \text{ in}^2} = 762 \text{ psi}$$

$$\tau^2 = \frac{\ldots}{9.9} \cong 1500 \text{ psi}$$

LL-398-2 (REV. 1)

LAWRENCE LIVERMORE LABORATORY - UNIVERSITY OF CALIFORNIA

ENGINEERING NOTE

MINOS

FILE NO.

PAGE

SUBJECT: Lifting Fixtures (Top)

NAME: ALAIN INUGAI

DATE

Option 2 cont.

$$\sigma = \frac{Mc}{I} = \frac{116840 \text{ lb-in} \times 4''}{134 \text{ in}^4} = 3488 \text{ psi}$$

$$\sigma_{vm} = (\sigma^2 + 3\tau^2)^{1/2} = 3730 \text{ psi}$$

(PG 251 Shigley)

SF = 9.7 ✓ OK

LAWRENCE LIVERMORE LABORATORY - UNIVERSITY OF CALIFORNIA

ENGINEERING NOTE

MINOS

FILE NO.

PAGE

SUBJECT: LIFTING ANALYSIS STRONGBACK

NAME: ALAIN INUGAI

DATE

We wish to find if the existing structure is sufficient to lift the strongback at points near the ears. Due to space constraints the top of the structure cannot be used. At this location a series of straight bar braces exist. (See figure 1)

We approximate this beam as a straight solid bar. This bar is more resistant to force than the current configuration.

We wish to find the maximum force required to lift the strongback and plate assembly ($W \simeq 9.5$ tons)

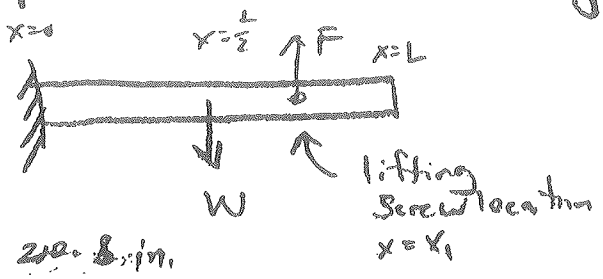

$$\sum M_{x=0} = -W\left(\frac{L}{2}\right) + F(x_1)$$

$$\Rightarrow F = \frac{30100\ (157.48\ \text{in})}{210.8\ \text{in}}$$

$x_1 = 210.8$ in.

$L/2 = 157.48$ in.

$F = 22500$ lbs

LL-338-2 (REV.

But once of the ground, the pins will have to hold the full weight.

However, once the strong back has been lifted to this point, we assume that forces have distributed to other beams. We take the maximum weight to be F

$L = 314.96$ in
$F = 14190$ $\quad w = \frac{W}{L} = 71.4 \ \frac{lb}{in}$

$$M_{max} = \frac{wL^2}{8} = \frac{71.4 \cdot (314.96)^2}{8} = 8.85 \times 10^5$$

$$\sigma = \frac{M_{max}\, y}{I}$$

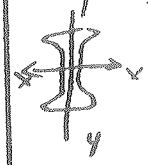

If we use a regular beam $y = 5''$

$I_x = 122.1 \text{ in}^4 \quad I_y = 6.9 \text{ in}^4$

we get

$$\sigma_{max} = \frac{8.85 \times 10^5 \,(5 \text{ in})}{122.1} = 36260 \text{ psi}$$

we note max allowable stress is 36000 with a safety factor of 3.0 thus design stress maximum is 12000 psi

LAWRENCE LIVERMORE LABORATORY - UNIVERSITY OF CALIFORNIA

ENGINEERING NOTE

MINOS

FILE NO.

PAGE

SUBJECT: MAIN LATERAL BEAMS

NAME: ALAIN INUGAI

DATE

Using Wide Flange beams we have

$y = 5''$ $I_x = 272.9\ in^4$ $I_y = 93\ in^4$

$$\sigma_{max} = \frac{-8.85 \times 10^5\ lb\text{-}in\ (5in)}{272.9\ in^4} = 16215\ psi$$

$SF = 2.2$

LL-338-2 (REV. 1)

LAWRENCE LIVERMORE LABORATORY - UNIVERSITY OF CALIFORNIA

ENGINEERING NOTE

MINOS

FILE NO.

PAGE

SUBJECT: Lifting Weld Fixtures (side)

NAME: Alain Inegaki

DATE

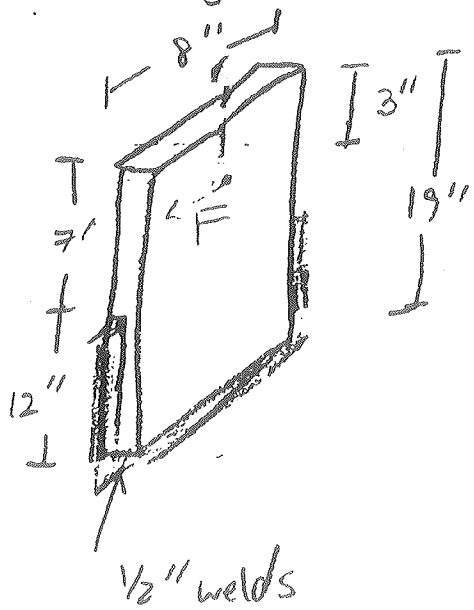

We take F as the force required to lift the strongback (calculated in main lateral side beam section)

$F = 22500\,lbs/2 = 11250\,lb$

$m = 180{,}000\ lb\text{-}in$

$I = \frac{bh^3}{12} = \frac{2(8")^3}{12} = 334\ in^4$

$\sigma = \frac{mc}{I} = \frac{180000\,lb\text{-}in\ 4"}{334\ in^4} = 2156\ psi$

$\tau' = \frac{F}{A} = \frac{11250}{16} = 703\ psi$

$\sigma_1, \sigma_2 = \frac{\sigma}{2} \pm \sqrt{\left(\frac{\sigma}{2}\right)^2 + \tau^2} \Rightarrow \sigma_1 = 2365\ psi,\ \sigma_2 = -209\ psi$

$\sigma_{vm} = \sqrt{\sigma_1^2 - \sigma_1\sigma_2 + \sigma_2^2} = 2476\ psi$

$SF = 14.5$ ✓ ok

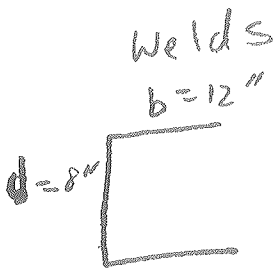

$J = .707\,h\,J_u$

$A = .707\,h\,(2b+d) = 11.3\ in^2$

$J_u = \frac{8b^3 + 6bd^2 + d^3}{12} - \frac{b^4}{2b+d}$

$= 1578.7 - 648 = 930.7\ in^3$

$J = 329.0\ in^4$

$\tau_1 = \frac{mr}{J} = \frac{180000\,lb\text{-}in\ (6")}{329\ in^4} = 3283\ psi$

$\tau_2 = \frac{F}{A} = 1327\ psi$

$\tau = 5704\ psi$

$SF = \frac{3600.0}{\sqrt{3}\ 5704} = 3.6$

LL-398-2 (REV.)

LAWRENCE LIVERMORE LABORATORY - UNIVERSITY OF CALIFORNIA

ENGINEERING NOTE

MINOS

FILE NO. | PAGE

SUBJECT: Beam Brackets (SIDE LOAD)

NAME: Alain Iwami

DATE

$\phi = 45°, 90°, 135°$

Bracket Thickness

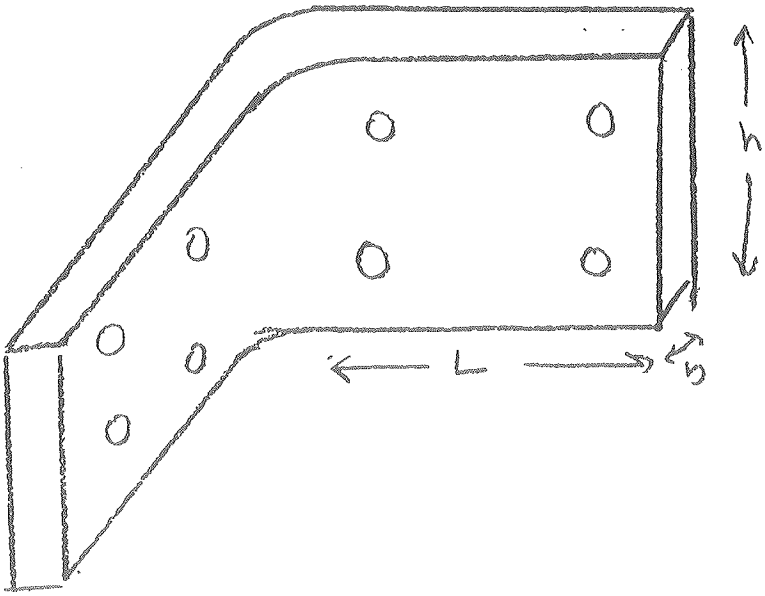

$L = 6.0''$

$h = 7.874''$

$b = 3/4''$

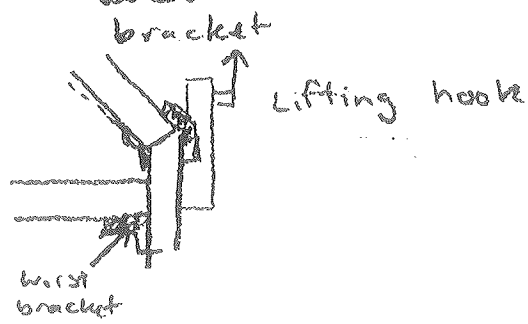

Calculate Material Strength

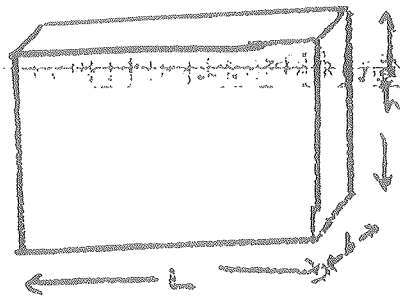

$F = 11250$ lb

$M_{max} = 180{,}000$ lb-in

due to lifting off ground

$$I = \frac{bh^3}{12} = \frac{3/4''\,(7.874)^3}{12} = 30.51 \text{ in}^4$$

$$c = \frac{h}{2} = 3.937''$$

$$\sigma = \frac{Mc}{I} = 23227 \text{ psi}$$

$$\tau = \frac{F}{A} = \frac{11250 \text{ lb}}{3/4'' \times 7.874''} = 1905 \text{ psi}$$

$$\sigma_1, \sigma_2 = \frac{\sigma}{2} \pm \sqrt{\left(\frac{\sigma}{2}\right)^2 + \tau^2} \Rightarrow \begin{array}{l} \sigma_1 = 23382 \text{ psi} \\ \sigma_2 = -155 \text{ psi} \end{array}$$

$$\sigma_{vm} = \sqrt{\sigma_1^2 - \sigma_1\sigma_2 + \sigma_2^2} = 23460 \text{ psi}$$

$$SF = \frac{36000}{23460} = 1.5$$

LL-398-2 (REV.

LAWRENCE LIVERMORE LABORATORY - UNIVERSITY OF CALIFORNIA

ENGINEERING NOTE | MINOS | FILE NO. | PAGE

SUBJECT: Beam Brackets (Side load)

NAME: Alain Inya

DATE:

Bolts

See Shigley 362-363

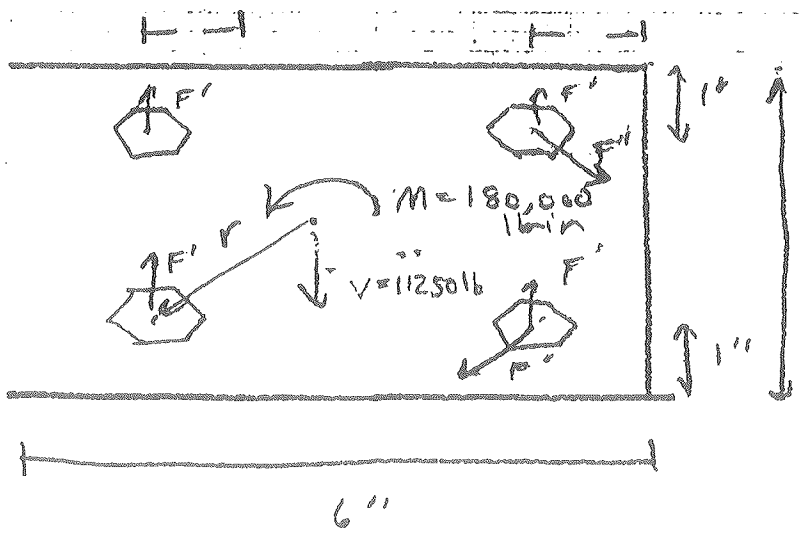

Bolts

3/4"-10

Tensile stress Area

1.3318 in²

	yield str psi	lb
Grade 2	57000	18914
Grade 5	92000	30528
Grade 8	130000	43138

$$r = \sqrt{\left(\frac{5.874}{2}\right)^2 + \left(\frac{4}{2}\right)^2} = 3.58 \text{ in}$$

TOTAL FORCE ON A BOLT

$$F' = \frac{V}{n} \qquad n = \#\text{ of bolts}$$

$$F'' = \frac{M}{4r}$$

$$F' = \frac{11250}{4} = 2813 \text{ lb}$$

$$F'' = \frac{(180{,}000 \text{ lb-in})}{4\,(3.58'')} = 12570 \text{ lb}$$

worst resultant on left 2 bolts

$$(12570)^2 = F^2 + 2813^2 - 2F(2813)\cos 45^\circ$$

$$0 = F^2 - 3978F - 1.5009 \times 10^8$$

$$F = \frac{3978 + \sqrt{3978^2 + 4(1.5009 \times 10^8)}}{2} = 14400 \text{ lb}$$

$$SF_{\text{grade 2}} = \frac{18914}{14400} = 1.3 \qquad SF_{\text{grade 8}} = \frac{43138}{14400} = 3.0$$

LL-398-2 (REV.

LAWRENCE LIVERMORE LABORATORY - UNIVERSITY OF CALIFORNIA

ENGINEERING NOTE

SUBJECT	FILE NO.	PAGE
		1
	NAME	
	DATE	

DRAWING OF LIFTING JOINT

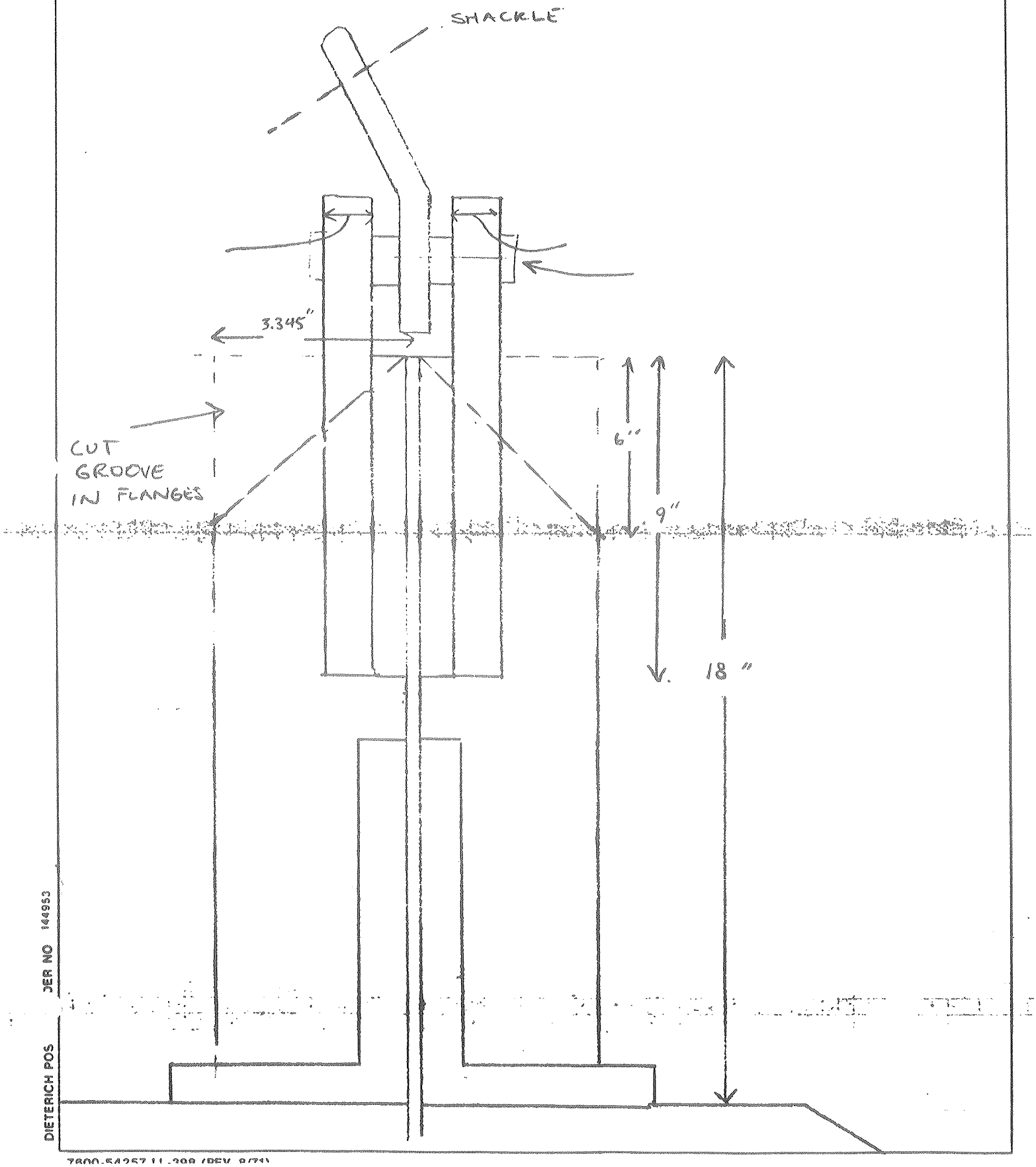

JER NO 144953

DIETERICH POS

7800-54257 11-298 (REV. 8/71)

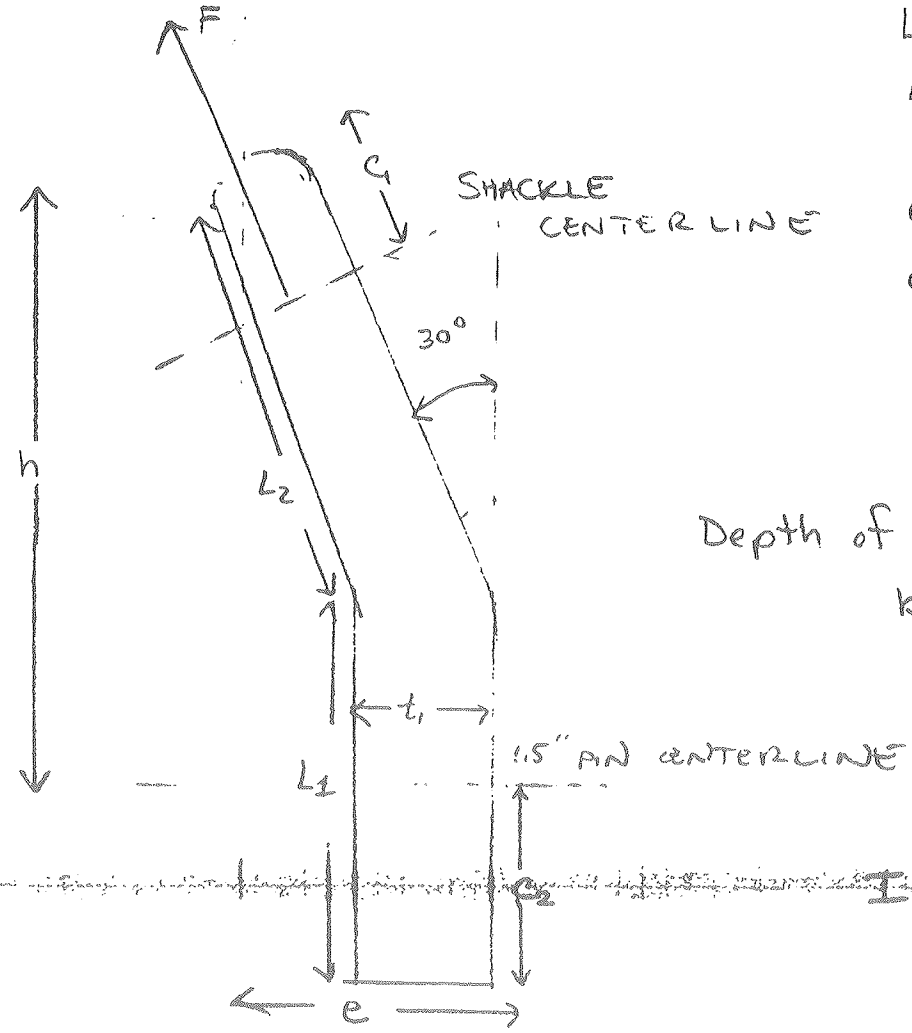

$L_1 = 5.25''$

$L_2 = 5.25''$

$t_1 = 2.25''$

$c_1 = 2.625''$

$c_2 = 2.625''$

$h = (L_2 - c_1)\sin 60 + L_1 - c_2$
$= 4.90''$

$e = t_1 + (L_2 - c_1)\cos 60$
$= 3.5625''$

Depth of Member,

$b_1 = 8.00''$

$I = \frac{bt^3}{12}$

WE EXAMINE THE BENDING IN THE MEMBER AT THE PIN CENTERLINE.

THE BENDING MOMENT IS DUE TO THE VERTICAL & HORIZONTAL FORCE COMPONENTS, F_V & F_H

$$M_o = F_V e + F_H h = 95.87 \text{ kip-in}$$

WHERE

$F_V = 15$ kips

$F_H = 15 \tan 30$ kips $= 8.66$ kips

DIETERICH POS. DER NO 144953

7800-54257 LL 398 (REV. 8/71)

THE BENDING STRESS IS

$$\sigma_b = \frac{Mc}{I} = \frac{(F_V e + F_H h)\left(\frac{t}{2}\right)}{\frac{bt^3}{12}} = 14203 \text{ psi}$$

$$\sigma_V = \frac{F_V}{bt} = 833 \text{ psi}$$

$$\sigma_{TOTAL} = \sigma_b + \sigma_V = 15036 \text{ psi}$$

$$\tau = \frac{F_H}{bt} = 481 \text{ psi}$$

PRINCIPAL STRESSES

$$\sigma_1, \sigma_2 = \frac{\sigma}{2} \pm \sqrt{\left(\frac{\sigma}{2}\right)^2 + \tau^2}$$

$$\sigma_{VM} = \sqrt{\sigma_1^2 - \sigma_1\sigma_2 + \sigma_2^2} = \begin{matrix} 15051 \text{ psi} \\ -15 \text{ psi} \end{matrix}$$

$$= 15059 \text{ psi}$$

$$\boxed{SF = \frac{53000 \text{ psi}}{15059 \text{ psi}} = 3.5}$$

Using 4140 Annealed Steel

DIETERICH POS. 1 JER NO 144953

7800 54257 LL 208 (REV. 8/71)

NOW WE EXAMINE PIN SIZE.
WE NOTE IT IS DOUBLE SHEAR SO THERE IS NO MOMENT TRANSFERED.
HOWEVER THE MOMENT M_o APPLIES A FORCE V ON THE PIN (Ø 2.4")

$$V = \frac{M_o}{d}$$

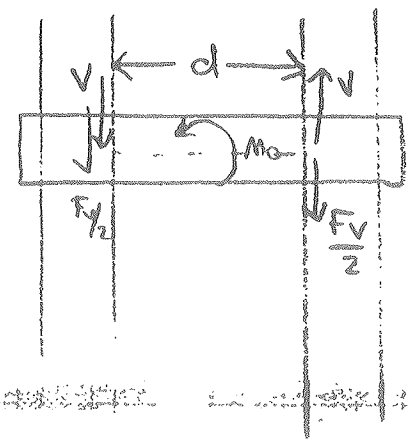

THE TOTAL FORCE APPLIED IS

$$F = \frac{F_V}{2} + V = \frac{F_V}{2} + \frac{M_o}{d}$$

THE STRESS IS

$$\tau = \frac{\frac{F_V}{2} + \frac{M_o}{d}}{\pi r^2} = \frac{\frac{15K}{2} + \frac{95.87\ \text{K-in}}{2.5''}}{\pi (1.00'')^2} = 14601\ \text{psi}$$

$$\sigma = \frac{F_H}{\pi r^2} = \frac{8.66\ \text{Kips}}{\pi (1'')^2} = 2758\ \text{psi}$$

$$\sigma_1, \sigma_2 = \frac{\sigma}{2} \pm \sqrt{\left(\frac{\sigma}{2}\right)^2 + \tau^2} \quad \begin{matrix} 15105\ \text{psi} \\ -504\ \text{psi} \end{matrix}$$

$$\sigma_{VM} = \sqrt{\sigma_1^2 - \sigma_1\sigma_2 + \sigma_2^2} = 15363\ \text{psi}$$

$$\boxed{SF = \frac{53000\ \text{psi}}{15363\ \text{psi}} = 3.4}$$

Use
4140
Annealed

DIETERICH POS. ER NO 144953

We check the bearing stress

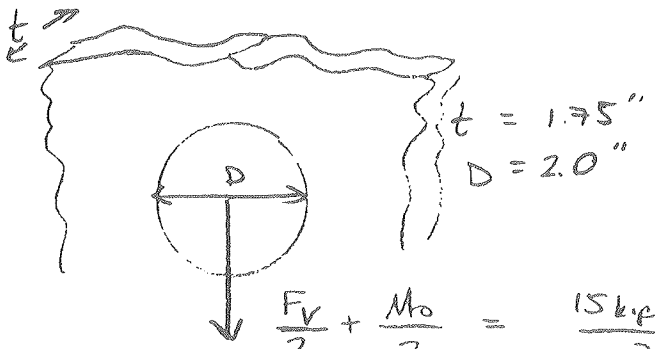

$$\frac{F_V}{2} + \frac{M_O}{2} = \frac{15\text{ kips}}{2} + \frac{95.87\text{ kip-in}}{2.5''} = 45.85\text{ kips}$$

Bearing area = $A_B = Dt$

$$\sigma = \frac{F}{A_B} = 13100\text{ psi}$$

Use A36 $\boxed{SF = \frac{36000}{13700} = 2.8}$

DIETERICH POS. ER NO 144953

WE NOW EXAMINE THE STRESS IN THE PIN RETAINING CLIPS AT LINE AA WHERE BENDING STRESS IS GREATEST

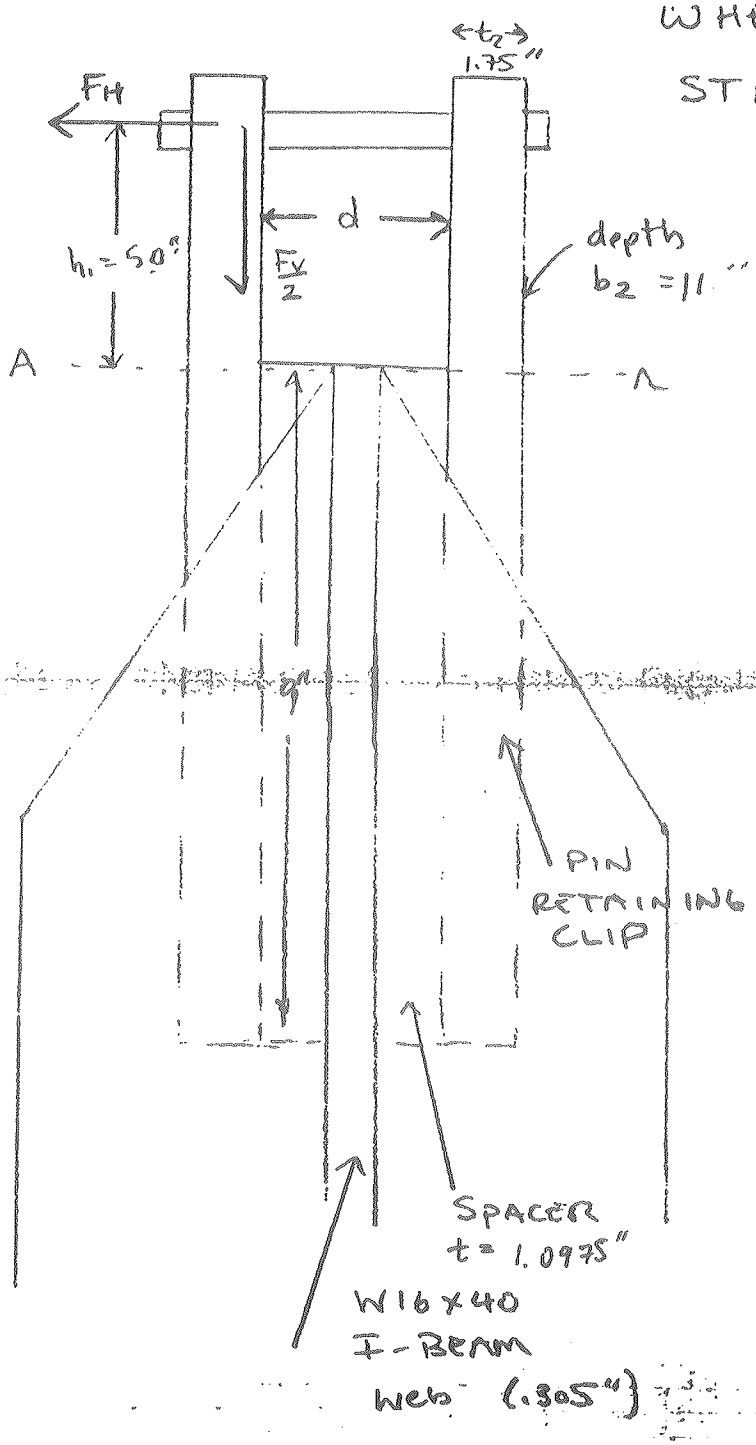

$$I = \frac{b_2 t_2^3}{12}$$

$$C = \frac{t_2}{2}$$

THE MOMENT IS

$$M_1 = \frac{M_0}{2} + \frac{F_H h_1}{2} = 69585 \text{ in-lb}$$

STRESS IS

$$\sigma = \frac{M_1 C}{I} = \frac{6\left(\frac{M_0}{2} + \frac{F_H h_1}{2}\right)}{b_2 t_2^2}$$

$$= 12394 \text{ psi}$$

$$\tau = \frac{F_V/2}{bt} = 330 \text{ psi}$$

$$\sigma_1, \sigma_2 = \frac{\sigma}{2} \pm \sqrt{\left(\frac{\sigma}{2}\right)^2 + \tau^2}$$

12402 psi
-8.6 psi

$$\sigma_{VM} = \sqrt{\sigma_1^2 - \sigma_1\sigma_2 + \sigma_2^2}$$

$$\sigma_{VM} = 12406 \text{ psi}$$

Use A36

$$SF = \frac{36000}{11145} = 2.9$$

DIETERICH POS. ER NO 144953

WE NOW NOTE THAT AT LINE AA THE PIN RETAINING CLIP (PRC) ARE STRONG ENOUGH TO ALONE HANDLE THE MOMENT THUS THE PRC - SPACER - WEB COMBINATION IS STRONG ENOUGH AS MORE MATERIAL RESISTS BENDING. WE WELD A LONG PART OF THE SPACER & PRC TO MAKE THE CONNECTION ACT AS ONE SOLID PIECE.

JER NO 144953

DIETERICH POS.

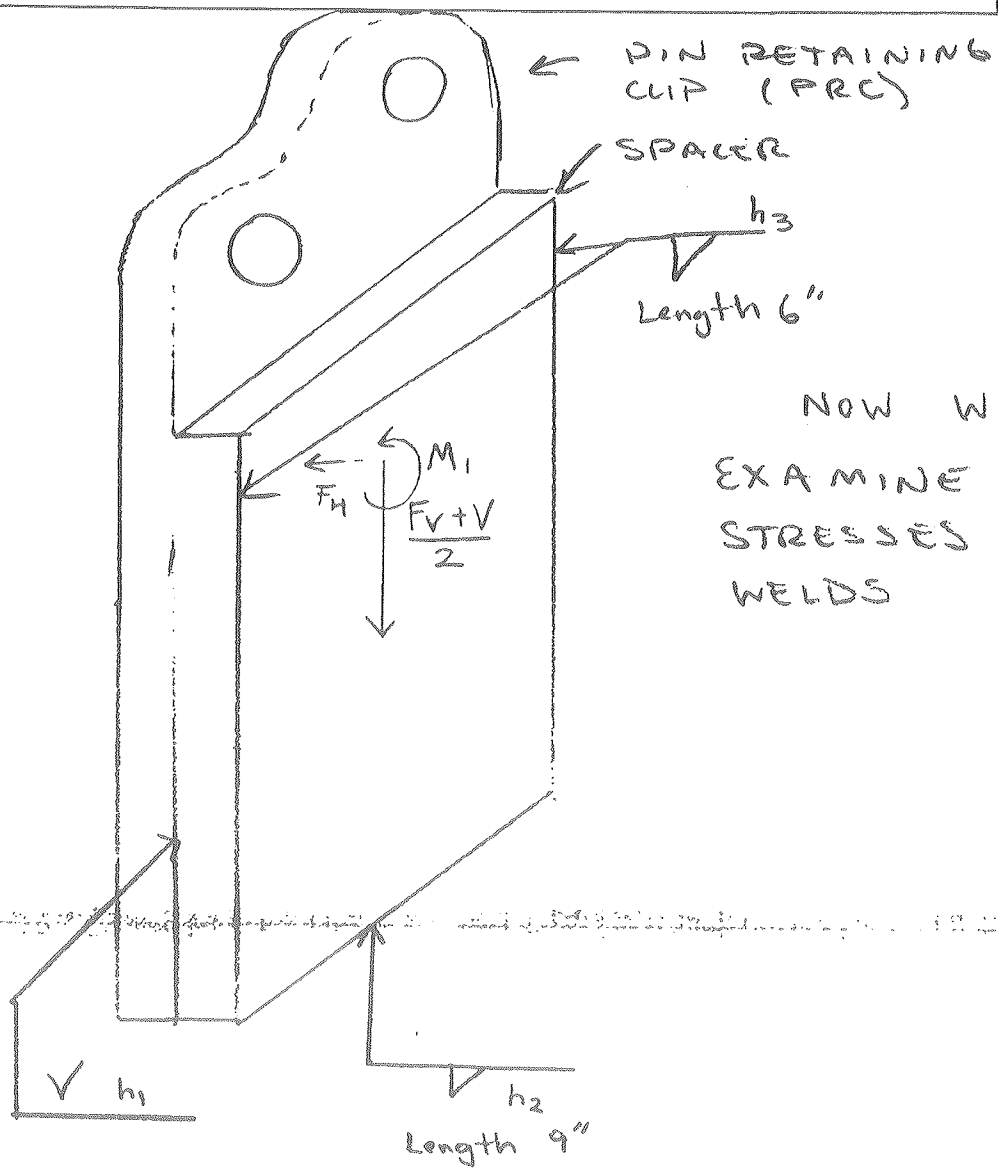

NOW WE WILL EXAMINE THE STRESSES IN THE WELDS

DIETERICH POSTER NO 144953

LAWRENCE LIVERMORE LABORATORY - UNIVERSITY OF CALIFORNIA

ENGINEERING NOTE

SUBJECT	FILE NO.	PAGE
	NAME	
	DATE	

MATT –

CAN YOU REACH IN HERE?
HOW MUCH GAP DO YOU NEED?
FLANGE WIDTH IS 7.0"

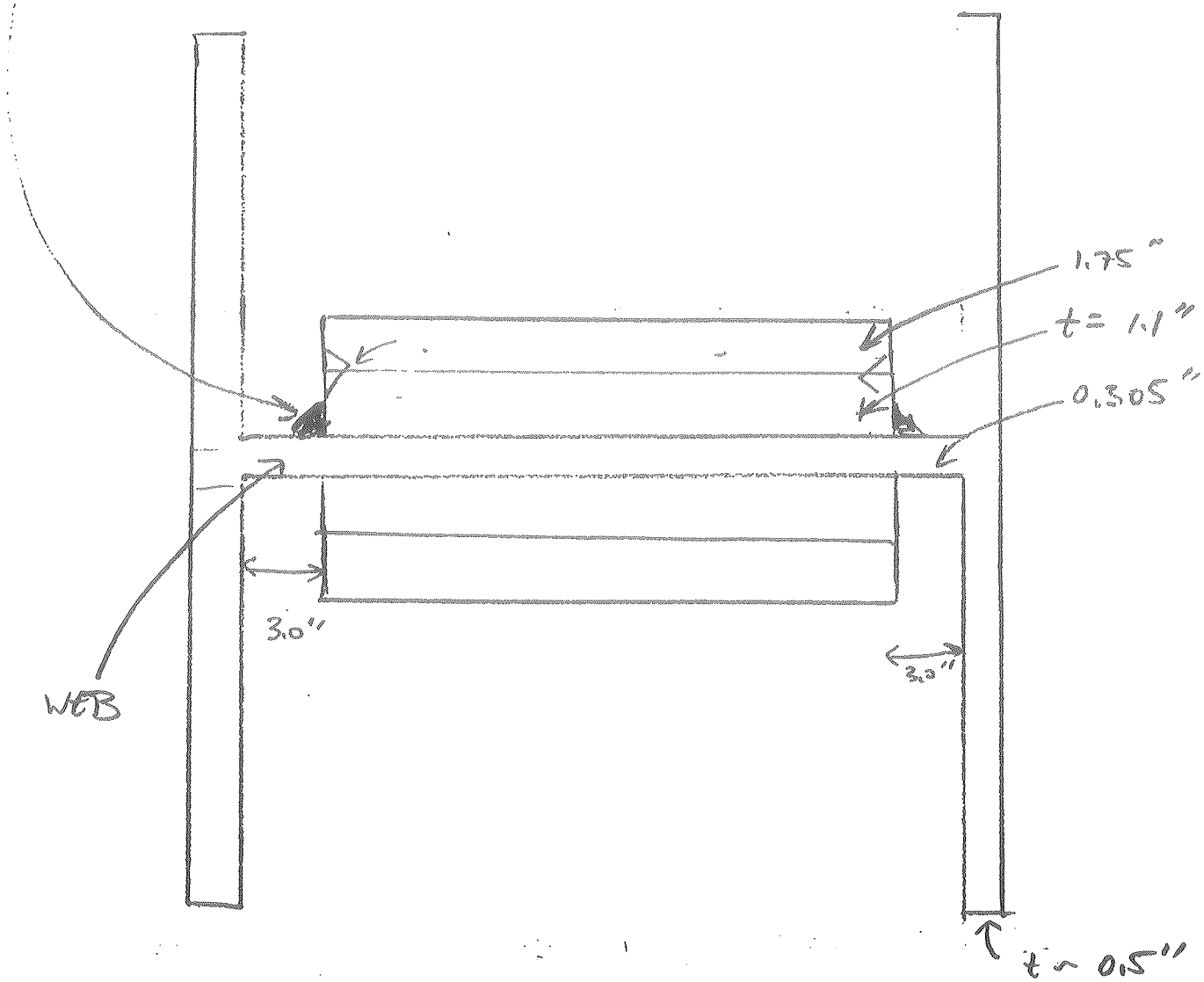

W16X40 BEAM

DER NO 144953
DIETERICH PC
7600-54257 LL-398 (REV. 8/71)

Lawrence Livermore National Laboratory

Fax Cover Sheet

Date:

Time:

Please Deliver the Following Pages ...

To:

Name: MATT WALTER

Company:

City:

Fax #: 30318

Voice #: 2-7667

From:

ALAIN INUGAI

Lawrence Livermore National Laboratory

Fax #:

Voice #: 4-5530

Info:

You should be receiving 3 pages including this cover sheet. If you do not receive all pages or there is an error during transmission, please call.

Notes: DRAWINGS YOU REQUESTED

GIVE ME A CALL WHEN U GET THESE

LAWRENCE LIVERMORE LABORATORY - UNIVERSITY OF CALIFORNIA

ENGINEERING NOTE

SUBJECT	FILE NO.	PAGE
	NAME	
	DATE	

DRAWING OF LIFTING JOINT

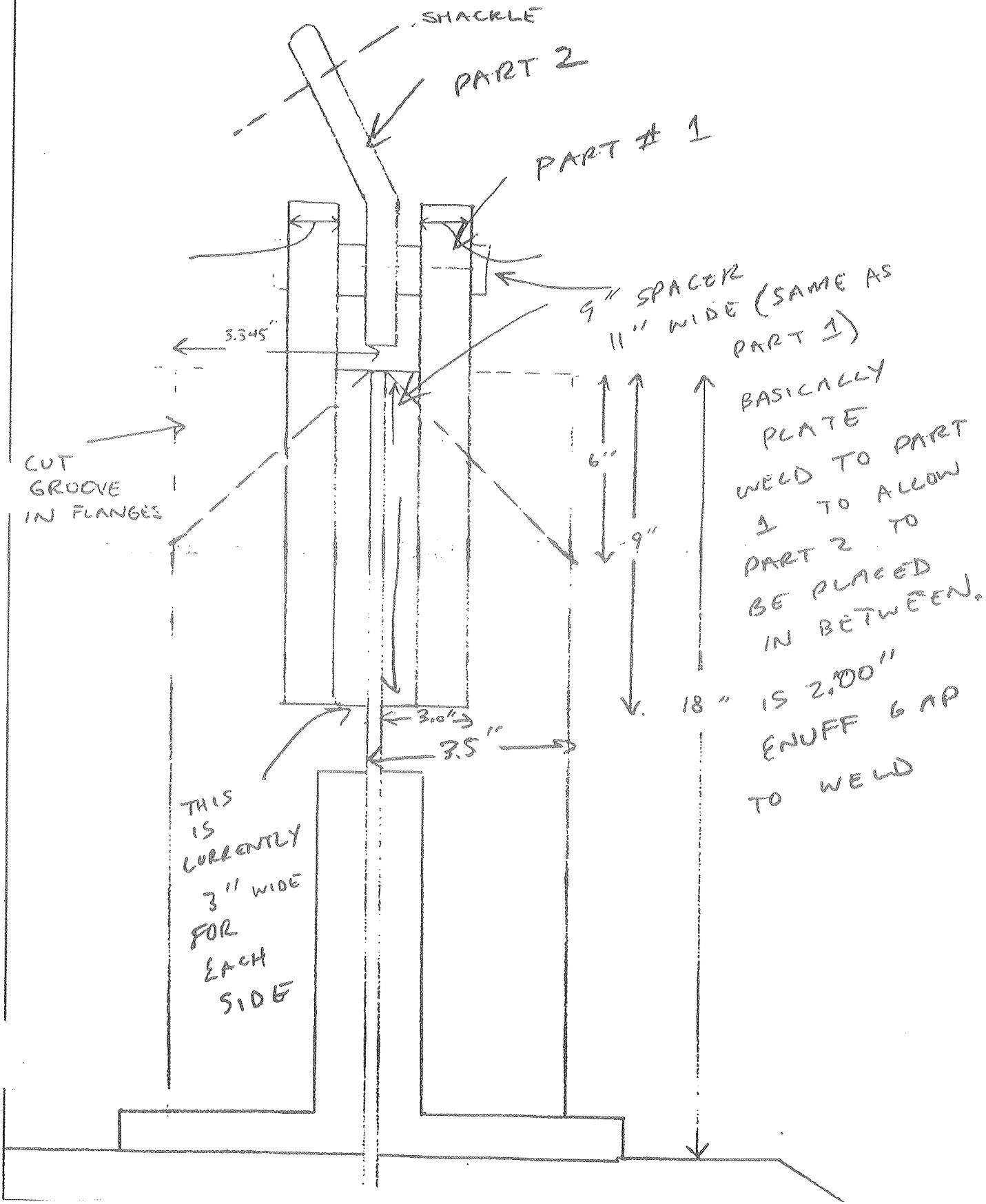

DIETERICH POS'R NO 144953

LAWRENCE LIVERMORE LABORATORY - UNIVERSITY OF CALIFORNIA

ENGINEERING NOTE

SUBJECT	FILE NO.	PAGE
PART 1	NAME	
	DATE	

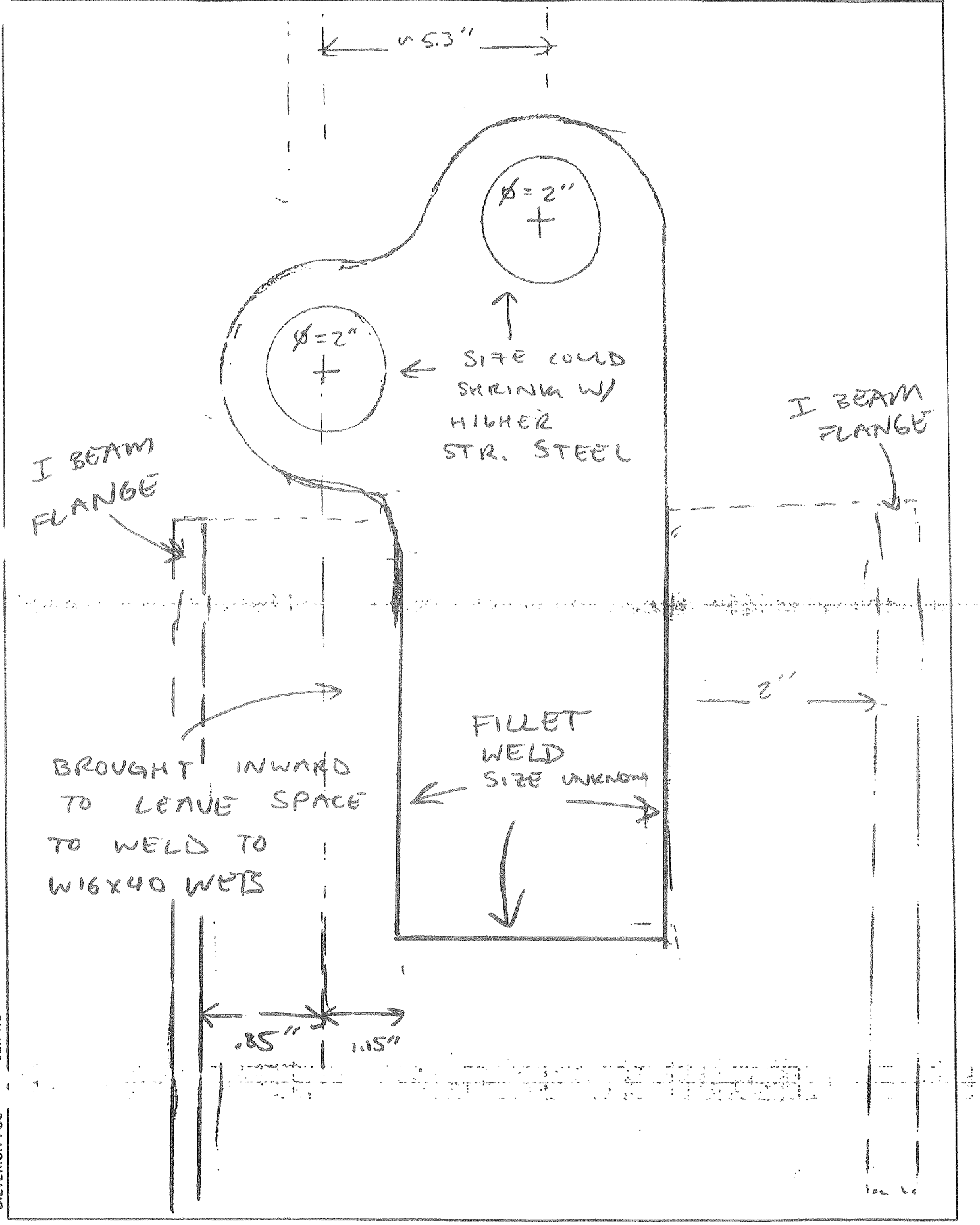

JER NO 144953

DIETERICH POS

LAWRENCE LIVERMORE LABORATORY : UNIVERSITY OF CALIFORNIA

ENGINEERING NOTE

SUBJECT PART 2		FILE NO.	PAGE
		NAME	
		DATE	

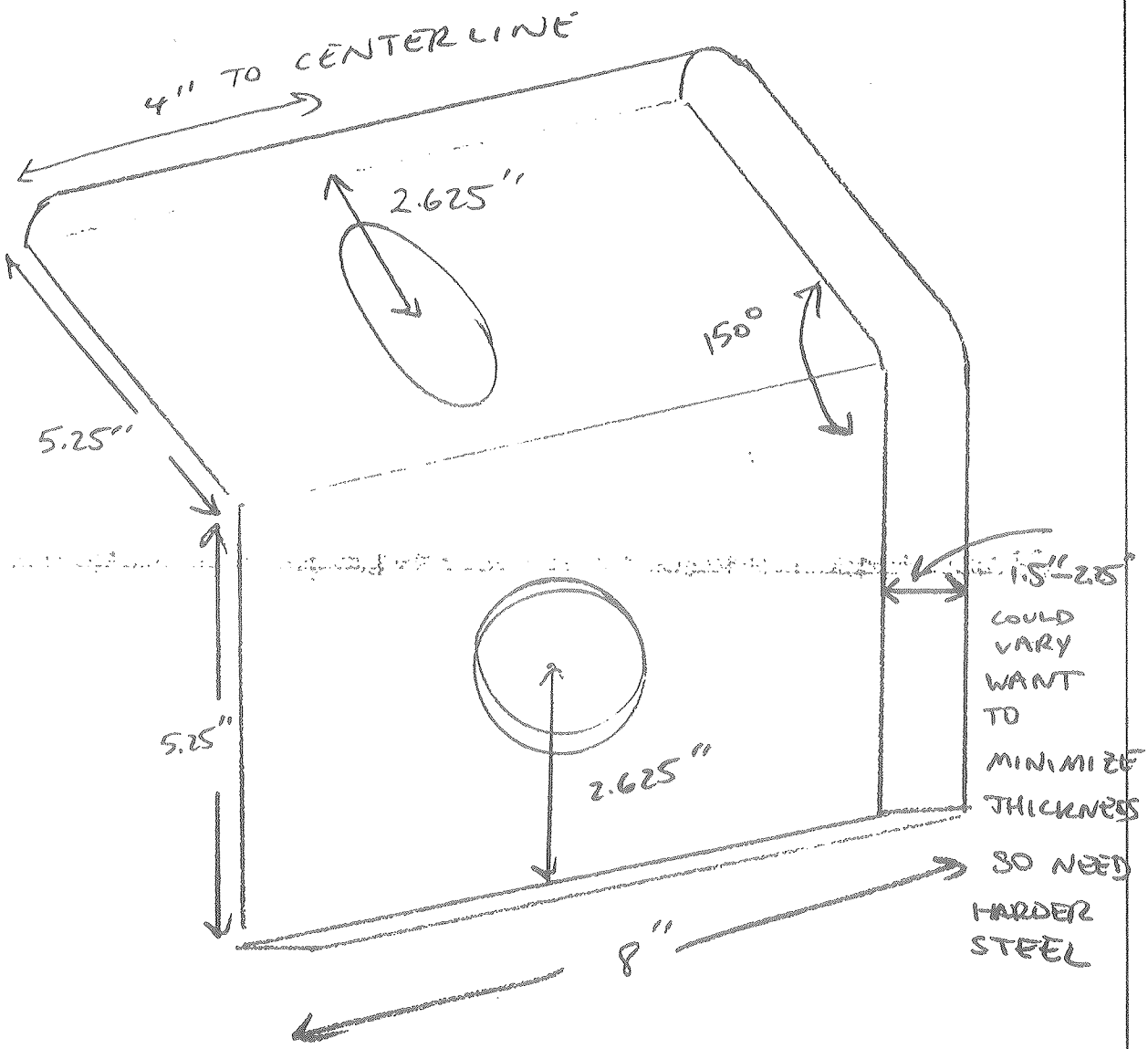

JER NO 144953

DIETERICH POS

Lawrence Livermore National Laboratory

Fax Cover Sheet

Date: 8/18/97

Time: 2:41 P.M

Please Deliver the Following Pages ...

To:

Name: KEN BOYDEN

Company:

City:

Fax #: 43874

Voice #: 31376

From:

ALAIN INUGAI

Lawrence Livermore National Laboratory

Fax #: 2-6747

Voice #: 4-5530

Info:

You should be receiving 4 pages including this cover sheet. If you do not receive all pages or there is an error during transmission, please call.

Notes: CHECK IF CAN BE DONE IN 4140 OR 4340 STEEL ANNEALED OR NORMALED ESPECIALLY PART 2. CAN THEY BEND 60° IN PLATE THAT THICK?

CUSTOMER COPY - SALES QUOTATION

Ryerson
a subsidiary of
Inland Steel Industries, Inc

Joseph T. Ryerson & Son, Inc.
SAN FRANCISCO PLANT
BOX 23070
OAKLAND, CA. 94623

To: UNIVERSITY OF CALIFORNIA

Attn: KEN BOYDEN

Phone Number: (510) 423-1376
Fax Number: (510) 424-3874

From: JOSEPH T. RYERSON, INC.,

DONALD A. MCCULLUM

Phone Number: (510) 653-2933
Fax Number: (510) 653-4214

Notes:

UNIVERSITY OF CALIFORNIA

ACCOUNT NUMBER: 1368311-00

PO#:
ITEMS: 1 APPROX VALUE: $481.00
QUOTE NUMBER: Q1384387970818

REQ#:
NWT: 273, GWT: 325
REF. NUMBER:

Bill Address:

NIVERSITY OF CALIFORNIA
LAWRENCE LIVERMORE LAB DIV
7000 EAST AVE
LIVERMORE, CA 94550

Ship Address:

UNIVERSITY OF CALIFORNIA
LLL DIV-7000 EAST AVE
BLDG ATTN:
LIVERMORE, CA 94550

CALLER: KEN BOYDEN
SHIP CLASS: OTX FRT: PPD
VIA: RECEIVE 7:45AM-4:30PM/LUNCH 12-12:45 F.O.B.: DESTINATION

NOTES: DEL'Y: 2 WEEKS ARO
TEST REPORTS: WITH MATL ATTN: TYPE: 1 COPIES: 1

CANT DO ANGLE IN
HIGH STRENGTH STEEL

THIS QUOTATION DOES NOT CONSTITUTE AN OFFER, PLEASE CONTACT THE SENDER
FOR A COMPLETE SET OF TERMS AND CONDITIONS GOVERNING THIS QUOTATION.

MECHANICAL PROPERTIES OF STEEL

Heat Treated Bars, Cont'd.

Tradename and Ryerson Color Marking	Condition of Steel	Tensile Strength KSI	Yield Strength KSI	% Elong. in 2"	% Red. of Area	Hardness Br.	Hardness R	Machinability Rating (C1212 = 100)
	Hot Rolled & Cold Finished							
4120/42 Black w/ Yellow Dot	2½" & under	125	105	16	50	269/321	27/34	55
	2 9/16"-4"	115	95	16	50	269/321	27/34	55
	Over 4"	110	85	16	45	269/321	27/34	55
4150 Black & Pink w/ Yellow Dot	Hot Rolled 1½" & under	140	120	15	45	285/341	29/36	55
	Over 1½"-2 15/16"	135	115	15	45	285/341	29/36	55
	3-5 15/16"	130	105	15	45	285/341	29/36	55
	6-8	125	95	15	40	285/341	29/36	55
	8¼-9½"	120	90	15	40	285/341	29/36	55
4340 White & Orange w/Yellow Dot	Hot Rolled 8" & under	140	120	14	42	302/363	32/39	52
Nitralloy 135 Mod. Blue w/ Yellow Dot	Hot Rolled 3" & less	120	85	16	50	311 max.	....	50
	Over 3"	120	85	15	40	311 max.	....	50

Plates Typical Properties

Properties shown for annealed and as rolled alloy plate are based on single test result. They will vary considerably dependent on thickness.

Type & Ryerson Color Marking	Condition of Steel	Tensile Strength KSI	Yield Strength KSI	% Elong. in 2"	% Elong. in 8"	Approx. Brinell Hardness
GENERAL PURPOSE						
1015	As Rolled	50	29	--	--	133
1020	As Rolled	58	32	--	--	143
1025	As Rolled	70	34	--	--	156
STRUCTURAL QUALITY CARBON						
ASTM A283, ASME SA283 Grade C Green & Black	As Rolled	55 to 60	30 Min.	25	22	133
ASTM A36, ASME SA36 Brown & Pink	As Rolled	58 to 80	36 Min.	23	20	137
INX 50, EX-TEN 50 ASTM A572(50) Wh. & Gr.	As Rolled	65 Min.	50 Min.	21	18	143
Cor-Ten A ASTM A242 White	As Rolled	70 Min.	50 Min.	--	16	156
Cor-Ten B ASTM A588(A) White	As Rolled	70 Min.	50 Min.	19	16	156
ASTM A656 Gr. 50 Gold-White-Gold	As Rolled	60 Min.	50 Min.	--	20	123/159
ASTM A656 Gr. 80 Gold & White	As Rolled	95 Min.	80 Min.	18	12	212/255
ROC-100 Pink-Blue-Pink	Q & T	110	100	18	--	229
STRUCTURAL QUALITY ALLOY						
T-1 Type A ASTM A514 Gr. B Green & Pink	Q & T	110 to 130	100 Min.	16	--	235/293
T-1 Type B ASTM A514 Gr. H Green & Blue	Q & T	110 to 130	100 Min.	16	--	235/293

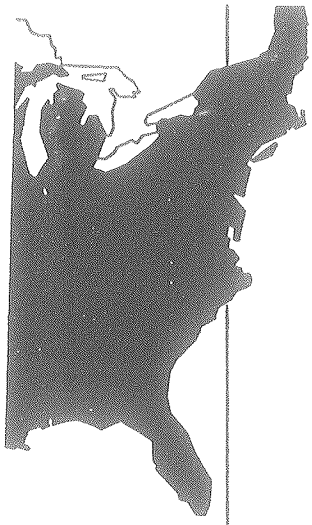

Salt Lake City
801/773-0421

San Francisco
510/653-2933

Seattle
206/624-2300

Spokane
509/535-1581

St. Louis
314/231-1020

Tulsa
918/428-3841

Wallingford
203/269-8744

CUSTOMER COPY - SALES QUOTATION

Joseph T. Ryerson & Son, Inc.

UNIVERSITY OF CALIFORNIA
ITEMS: 1 NWT: 273, GWT: 325

(#1) 4 PIECES PLT T1 TYPE B/EQUIV A514 GRH C CODE: 12-894260
2" X 10" X 12" BRS NWT: 273 GWT: 325
TEST REPORTS REQUESTED FOR THIS ITEM:
ATTN: TYPE: MILL CERTS
DLVR: WITH MATL COPIES: 1
$120.25/PC PART#: LIFT LUG-NO HOLES

**** E N D O F Q U O T E ****

To: ALAIN 2-6747

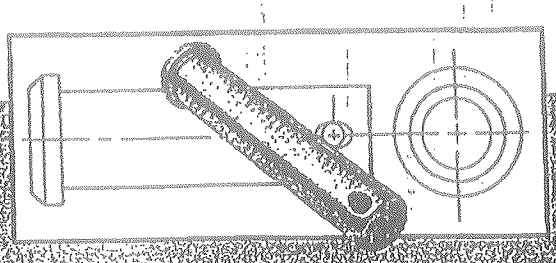

Quantity Discount Per Each Size Only.

Stock Code	Size	Net Price Per 100 Pieces 0-99 Pcs.	100-Up Pcs.	Approximate Weight/Pounds Per 100 Pieces	Length Under Head: To Edge of Hole	To Center of Hole	Hole Size
CP-240	1/2 x 3-1/2	$ 30.73	$23.05	19.74	3.266	3.344	5/32
CP-242	1/2 x 4	$ 32.13	$24.10	22.36	3.766	3.844	
CP-244	1/2 x 4-1/2	$ 37.13	$27.85	24.98	4.266	4.344	
CP-246	1/2 x 5	$ 43.73	$32.80	27.60	4.766	4.844	
CP-258	5/8 x 1-1/4	$ 23.87	$17.90	13.30	1.016	1.094	
CP-260	5/8 x 1-1/2	$ 27.00	$20.25	15.32	1.266	1.344	
CP-262	5/8 x 1-3/4	$ 30.07	$22.55	17.80	1.516	1.594	
CP-264	5/8 x 2	$ 33.07	$24.80	19.26	1.766	1.844	
CP-266	5/8 x 2-1/4	$ 36.73	$27.55	21.64	2.016	2.094	
CP-268	5/8 x 2-1/2	$ 38.40	$28.80	23.82	2.266	2.344	
CP-270	5/8 x 3	$ 43.73	$32.80	28.04	2.766	2.844	
CP-272	5/8 x 3-1/2	$ 49.93	$37.45	32.20	3.266	3.344	
CP-274	5/8 x 4	$ 53.00	$39.75	36.06	3.766	3.844	
		6-49 Pcs.	50-Up Pcs.				
CP-284	3/4 x 2	$ 59.17	$44.38	28.78	1.766	1.844	
CP-286	3/4 x 2-1/2	$ 69.23	$51.92	34.90	2.266	2.344	
CP-288	3/4 x 2-3/4	$ 72.57	$54.43	37.96	2.516	2.594	
CP-290	3/4 x 3	$ 77.04	$57.78	41.34	2.766	2.844	
CP-292	3/4 x 3-1/2	$ 84.85	$63.64	47.32	3.266	3.344	
CP-294	3/4 x 3-3/4	$ 89.88	$67.41	50.36	3.516	3.594	
CP-296	3/4 x 4	$ 94.91	$71.18	53.32	3.766	3.844	
CP-298	3/4 x 4-1/2	$ 104.95	$78.71	59.50	4.266	4.344	
CP-300	3/4 x 5	$ 112.76	$84.57	64.80	4.766	4.844	

MILITARY SPECIFICATION MS 20392 CLEVIS PINS - FULLY CERTIFIED

Nominal Size/Capabilities						
	.188	.250	.312	.375	.438	.500
Dash Nos.	2C11-2C95	3C11-3C97	4C17-4C97	5C17-5C127	6C17-6C127	7C19-7C127
Minimum Double Shear Strength (lbs.)						
Steel 1/	4,140	7,360	11,500	16,560	22,540	29,440

1/ Values shown are for 4037, 4130 or 8630 steel.

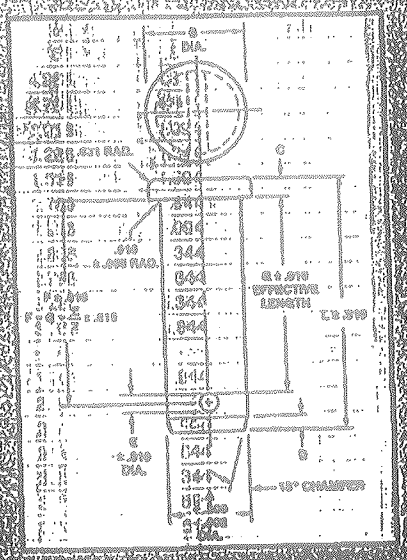

REQUIREMENTS

Material: Steel alloy 4037 per MIL-S-5626, 4130 per MIL-S-6758 or 8630 per MIL-S-5626

Material: Steel Alloy 8740 per MIL-S-5626

Finish: Steel alloy, cadmium plated in accordance with QQ-P-416, type I, class 2

Example of Part Number:

MS20392 - 3C33 - 4.25 nominal dia. (33/32) effective length, steel alloy 4037, 4130 or 8630 cadmium plated

3C33 - 2.75 effective length (11/32)

Military standard: MS20392

Material: C - steel alloy 4037, 4130 or 8630

Number: 3 - 3/8 nominal diameter

33 - 33/32 effective length

Finish: Steel alloy 8740, cadmium plated

(optional) F - silver plated

P - passivated nickel plate

A - alloy steel titanium alloy (TI-6AL-4V)

B - alloy steel titanium alloy (TI-6AL-4V)

C - cadmium plated and polished finish

PIVOT POINT (No Minimum for Maximum Customer Service)

Fax 415.948.9251 • Sev 415.948.9253

Cg CALCULATION FOR. LIFTING PTS. for STRONGBACK + Plate

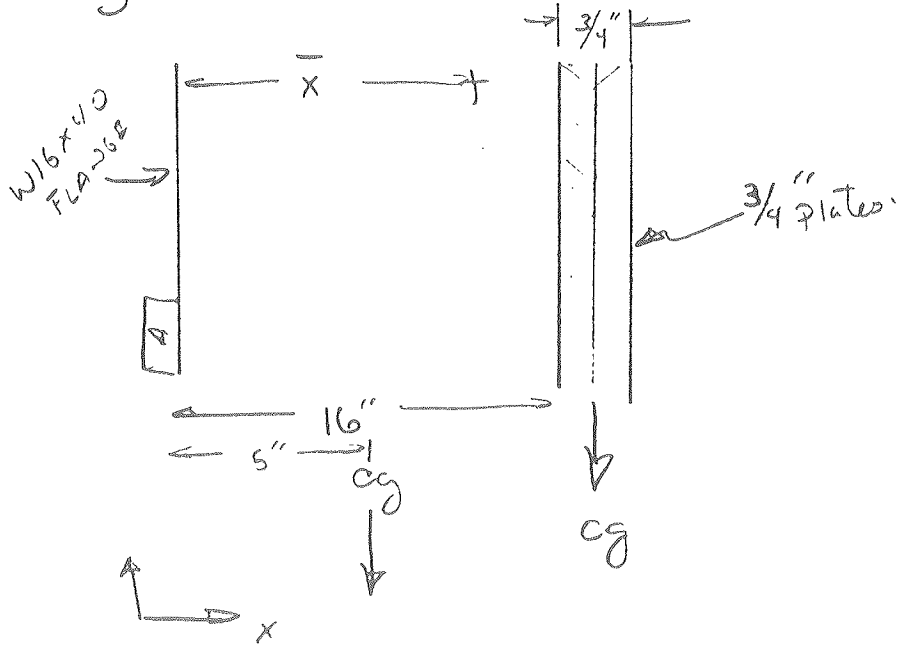

weights.

STRONGBACK	9112 #
Bolts, Nuts etc.	365
Retainer Clips	609
Lifting Plate	142
Brackets.	1755
+ Δ	300
TOTAL WT	11319 #

• Plates 17655 #

$$\bar{x} = \frac{(11319 * 9") + (17655 * 16.40)}{(11319 + 17655)}$$

$$\boxed{\bar{x} = 13.12"}$$

LAWRENCE LIVERMORE LABORATORY - UNIVERSITY OF CALIFORNIA

ENGINEERING NOTE

FILE NO.

PAGE 1/8

SUBJECT

NAME ALAIN INUGIAT

DATE

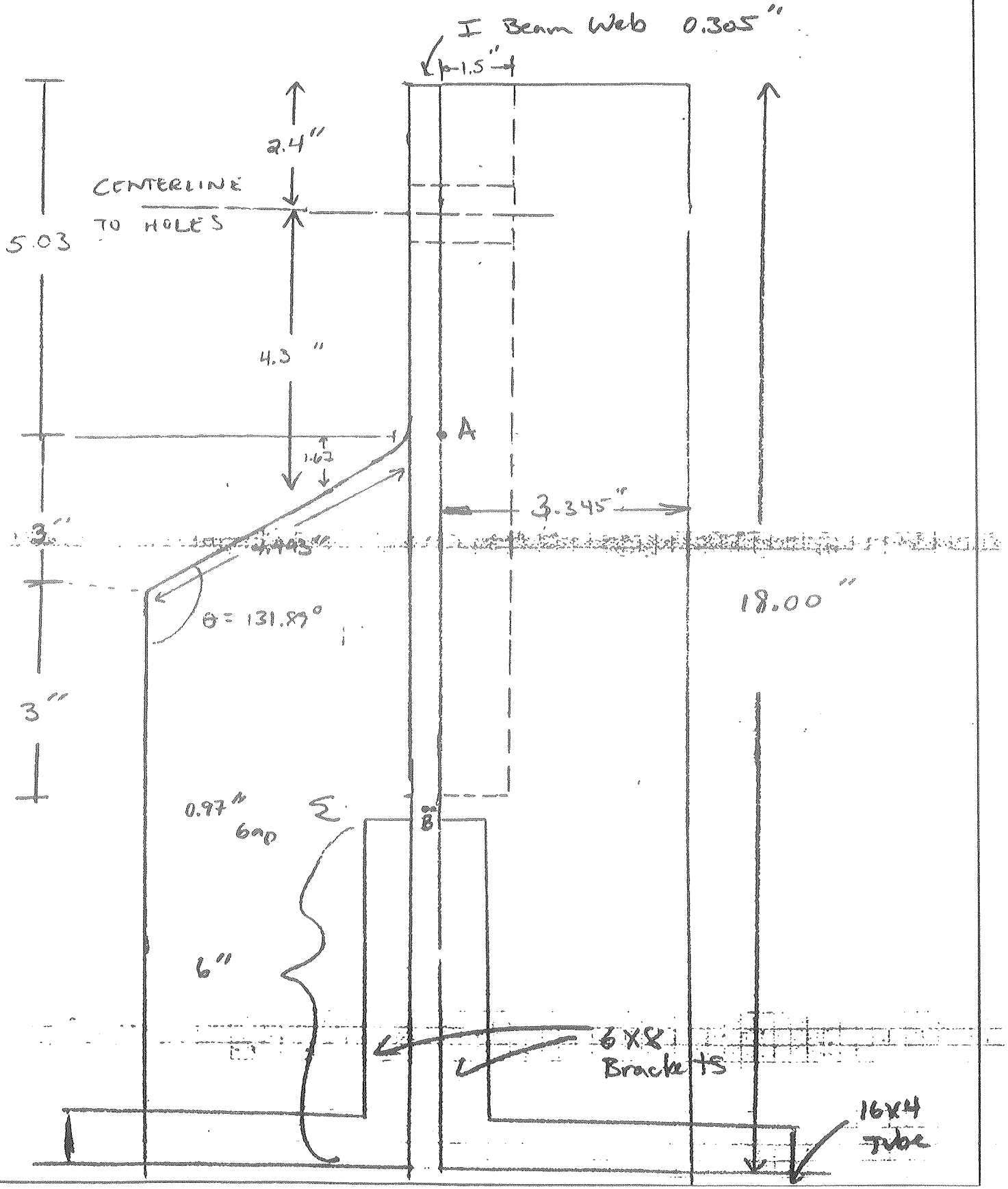

DIETERICH POS. JER NO 144953

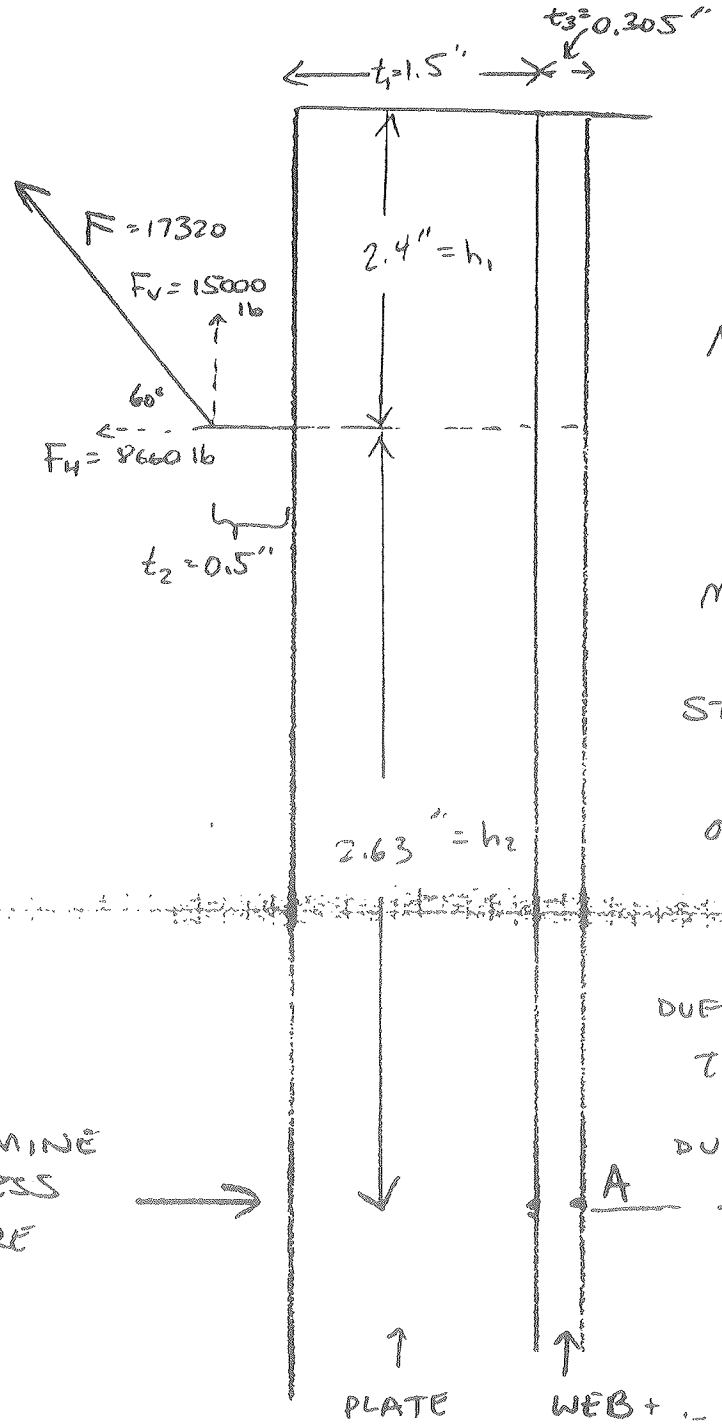

COMPUTE STRESS AT A.

$$M_A = -F_V(t_1 + t_2 + t_3) + F_H h_2$$

$$= 15000\,lb(1.5 + .5 + .305'') + 8660\,lb(2.63'')$$

$$= -11800 \text{ lb-in}$$

$$M_T' = F_H(13.4 - 8'')$$

$$= 46764 \text{ lb-in}$$

STRESS DUE TO BENDING

$$\sigma = \frac{M_A c}{I_A}$$

$c = 3.345''$ (Flange)

I_A = see next page

$$= \frac{11800(3.345)}{24.13 \text{ in}^4} = 1636 \text{ psi}$$

DUE TO SHEAR

$$\tau = \frac{F_V}{A} = \frac{15000\,lb}{1.5 \times 10} = 1000 \text{ psi}$$

DUE TO TORSION

$$\tau = \frac{M_T' t}{R}$$

$t = .505$

R (see next page)

$$= 2449 \text{ psi}$$

TOP VIEW

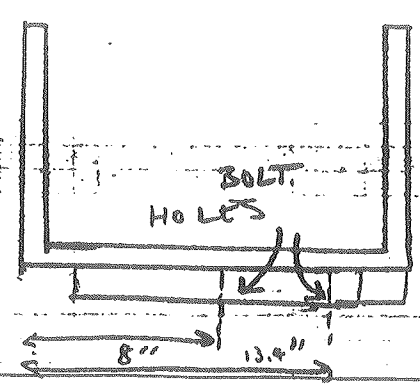

PLATE INNER THICKNESS = 10''

PLATE OUTER THICKNESS = 12.5''

DIETERICH POS. JER NO 144953

Calculate Moment of Inertia @ A

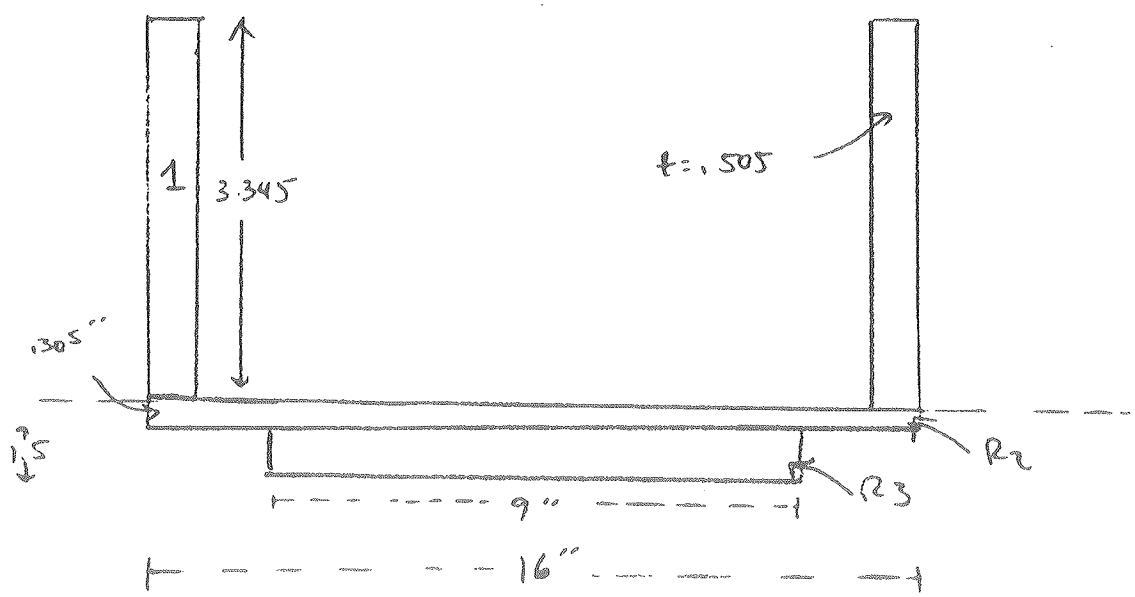

$$I = 2 I_{FLANGE} + I_{WEB} + I_{PLATE}$$

$$= 2\left(\frac{3.345^3(.505)}{3}\right) + \frac{(.305)^3 16''}{3} + \frac{10(1.5)^3}{3}$$

$$12.6 \text{ in}^4 + .151 \text{ in}^4 + 11.25 \text{ in}^4$$

$$= 24.13 \text{ in}^4$$

CALCULATE TORSIONAL RESISTANCE

$$R = 2R_1 + R_2 + R_3$$ DESIGN OF WELDED STRUCTURES PG 2.10.2

$$= 2(.299)\,3.345(.505)^3 + (.333)(16)(.305)^3 + (.299)(10)(1.5)^3$$

$$= (0.2576 + 0.1512 + 10.091)\text{ in}^4$$

$$= 10.50 \text{ in}^4$$

DIETERICH POST REORDER NO 149953

Calculate Von Mises Stress

Need Principal Stresses

$\sigma = 1636$ psi

$\tau = 1000 + 2449$ psi $\simeq 3449$ psi

$$\sigma_1, \sigma_2 = \frac{\sigma}{2} \pm \sqrt{\left(\frac{\sigma}{2}\right)^2 + \tau^2} \Rightarrow \begin{array}{l} \sigma_1 = 4363 \text{ psi} \\ \sigma_2 = -2727 \text{ psi} \end{array}$$

$$\sigma_{vm} = \sqrt{\sigma_1^2 - \sigma_1 \sigma_2 + \sigma_2^2} = 6194 \text{ psi}$$

$$S.F. = \frac{36000}{\sigma_{vm}} = 5.8 \checkmark \text{ OK}$$

DIETERICH POST RL ..OER NO 144953

CHECK STRESS AT POINT B.

I_{yy} BEAM = $28.8\ in^4$

$I_{xy} = 578\ in^4$

$J = I_x + I_y = 606.8\ in^4$

$M_B = -F_V(t_1+t_2+t_3) + F_H(9.63'') = 51108\ lb\text{-}in$

STRESS DUE TO BENDING

$$\sigma = \frac{M_B\, c}{I_{yy}} = \frac{51108 \cdot (3.4975)}{28.8\ in^4} = 4207\ psi$$

$$\tau = \frac{F_V}{A} = \frac{15000\ lb}{11.8\ in^2} = 1272\ psi$$

$$\sigma_1, \sigma_2 = \frac{\sigma}{2} \pm \sqrt{\left(\frac{\sigma}{2}\right)^2 + \tau^2} \Rightarrow \begin{array}{l}\sigma_1 = 4458\ psi \\ \sigma_2 = -251\ psi\end{array}$$

$$\sigma_{VM} = \sqrt{\sigma_1^2 - \sigma_1\sigma_2 + \sigma_2^2} = 4587\ psi$$

$$S.F = \frac{36000}{\sigma_{VM}} = 5.5 \checkmark \text{ OK}$$

DIETERICH POSTER NO 144953

LAWRENCE LIVERMORE LABORATORY - UNIVERSITY OF CALIFORNIA

ENGINEERING NOTE

SUBJECT	FILE NO.	PAGE 6/8
	NAME	
	DATE	

BACKING PLATE

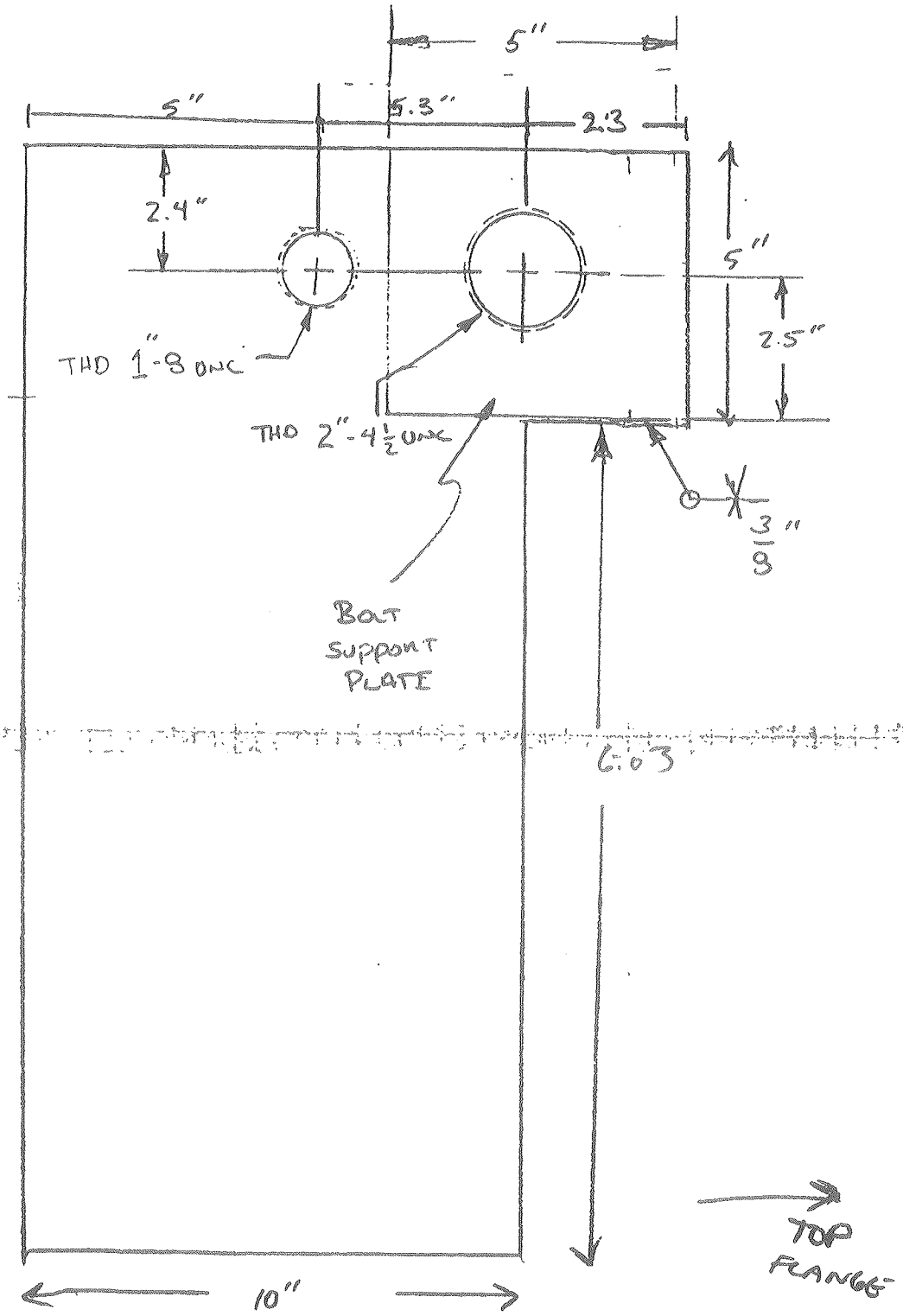

DIETERICH POST REORDER NO 144953

CALCULATE WELD STRENGTH.

$M_1 = M_A = 11800$ lb-in

$M_2 = 46764$ lb in

PROM PAGE 2

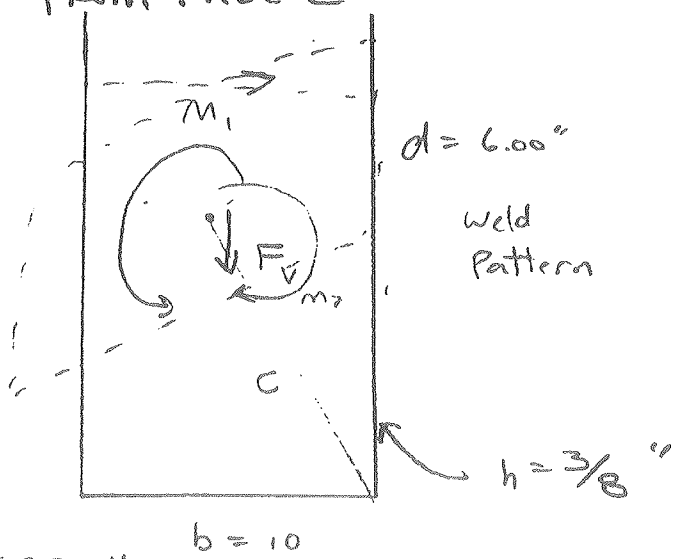

WE HAVE A BENDING AND TORQUE MOMENT (M_1 & M_2 RESPECTIVELY)

FOR WELD ANALYSIS FROM SHIGLEY PG. 396-397

$$A = 0.707h(b+2d) = 5.83 \text{ in}^4$$

$$I_u = \frac{2d^3}{3} - 2d^2\bar{y} + (b+2d)\bar{y}^2 = 84.8 \text{ in}^4$$

$$\bar{y} = \frac{d^2}{b+2d} = 1.64''$$

$$J_u = \frac{8d^3 + 6db^2 + b^3}{12} - \frac{d^4}{2d+b} = 468 \text{ in}^4$$

$$I = .707h I_u = 22.49 \text{ in}^4$$

$$J = .707h J_u = 124.2 \text{ in}^4$$

$$c = r = \sqrt{(d-\bar{y})^2 + (\tfrac{b}{2})^2} = 6.63''$$

STRESS DUE TO M_1 & M_2

$$\sigma = \frac{M_1 c}{I} \qquad \tau = \frac{M_2 r}{J} + \frac{F_V}{A}$$

$$\sigma = \frac{(11800 \text{ lb-in})(6.63'')}{22.49 \text{ in}^4} = 3479 \text{ psi}$$

$$\tau = \frac{46764 \text{ lb-in}(6.63'')}{124.2 \text{ in}^4} + \frac{15000 \text{ lb}}{5.83 \text{ in}^2} = (2496 + 2573) \text{ psi} = 5069 \text{ psi}$$

DIETERICH POSTI ML...DER NO 144953

PRINCIPAL STRESSES

$$\sigma_1, \sigma_2 = \frac{\sigma}{2} \pm \sqrt{\left(\frac{\sigma}{2}\right)^2 + \tau^2} \Rightarrow \begin{array}{l} \sigma_1 = 7100 \text{ psi} \\ \sigma_2 = -36201 \text{ psi} \end{array}$$

$$\sigma_{vm} = \sqrt{\sigma_1^2 - \sigma_1\sigma_2 + \sigma_2^2} = 9446 \text{ psi}$$

$$S.F = \frac{36000}{\sigma_{vm}} = 3.8 \checkmark \text{ OK}$$

DIETERICH POST REORDER NO 144953

LAWRENCE LIVERMORE LABORATORY - UNIVERSITY OF CALIFORNIA

ENGINEERING NOTE

SUBJECT	FILE NO.	PAGE
	NAME ALAIN INUGAI	
	DATE	

LIFTING STRUCTURE (16 TONS)

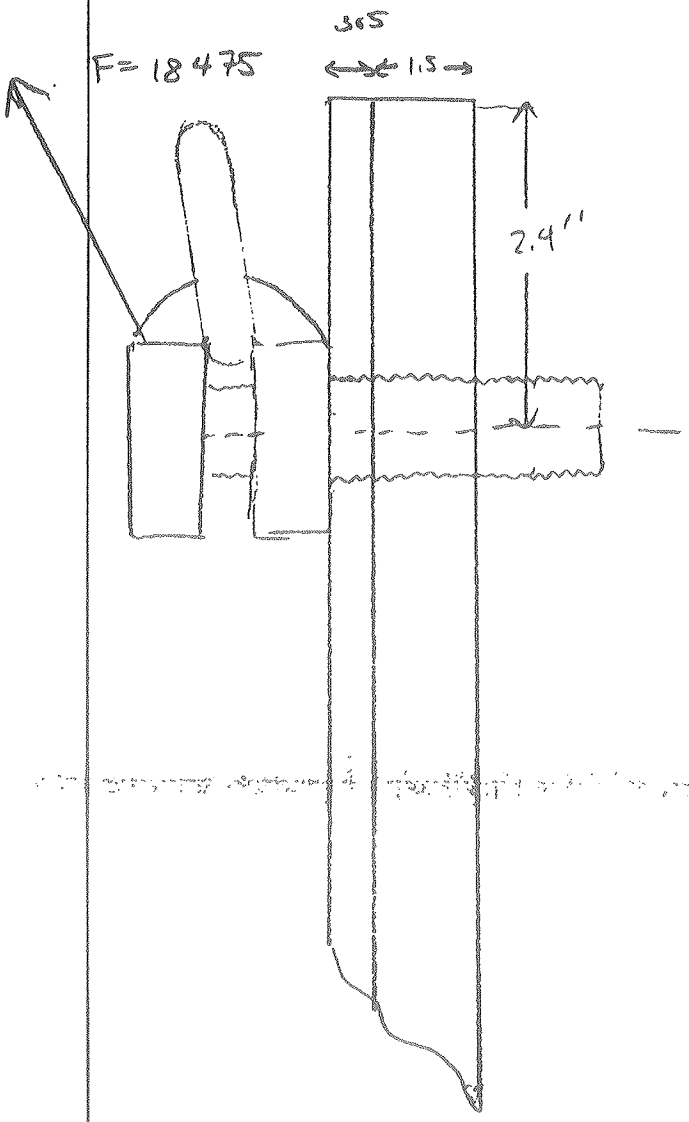

BOLT STRENGTH CALCULATIONS

BOLT YIELD STRENGTH

SS

DIETERICH POS ER NO 144953

LAWRENCE LIVERMORE LABORATORY - UNIVERSITY OF CALIFORNIA

ENGINEERING NOTE

FILE NO.

PAGE 3/3

SUBJECT: STRONG BACK LIFTING ASSEMBLY

NAME: T. LADRAN

BOLT SUPPORT PLATE

DATE

MAT'L A36 STL PLATE 1.5" THK.

TOLERANCE ±0.010

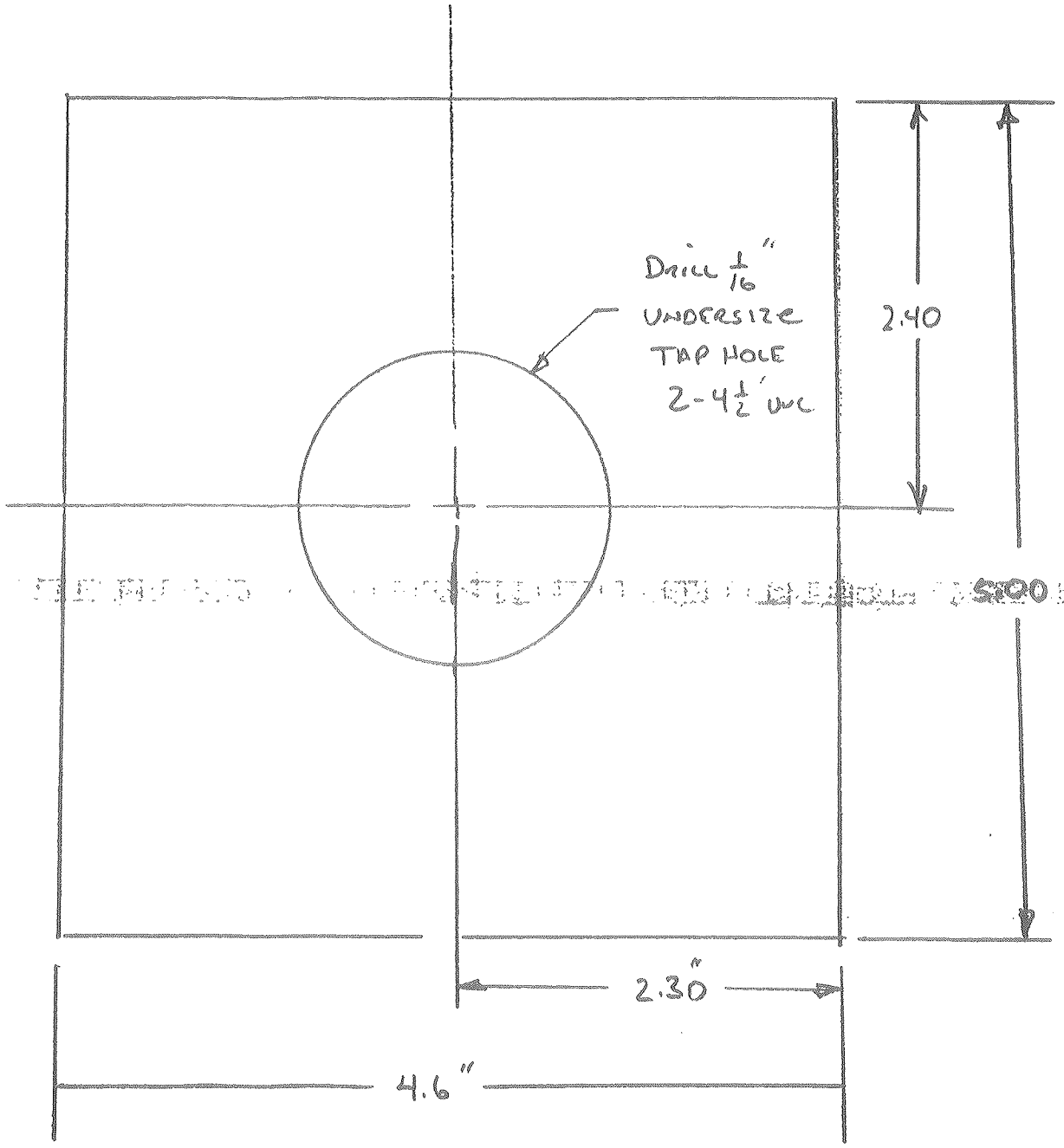

NOTE (1) WELD PREP PER WELDMENT ASSEMBLY

DIETERICH POSTER NO 144953

LAWRENCE LIVERMORE LABORATORY - UNIVERSITY OF CALIFORNIA

ENGINEERING NOTE

FILE NO.

PAGE 2/3

SUBJECT: STRONGBACK LIFTING ASSEMBLY
SWIVEL EYE BACKING PLATE.

NAME: T. LADRAJ

DATE

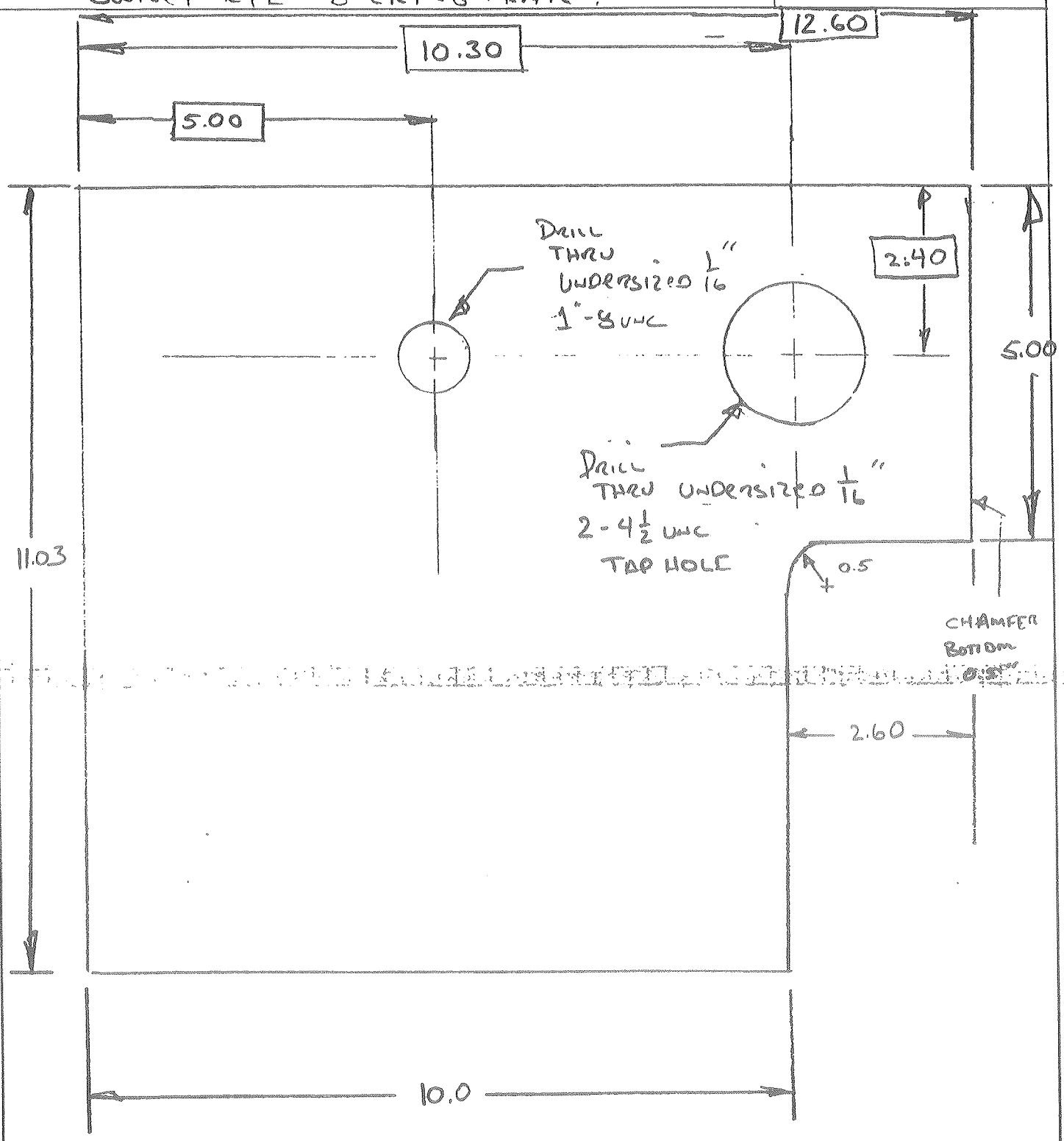

NOTES: (1) STRUCTURAL STEEL PLATE A36
(2) 1.50" THICK
(3) UNDERSIZE HOLES - PREDRILL UNDERSIZE 1/16" TAP HOLE
REAM WELDMENT ASSEMBLY TO SIZE
(4) WELD PREP PER ASSEMBLY WELDMENT.

DIETERICH POST NUMBER NO 144953

LAWRENCE LIVERMORE LABORATORY - UNIVERSITY OF CALIFORNIA

ENGINEERING NOTE

FILE NO.

PAGE 5/8

SUBJECT: STRONG BACK LIFTING ASSEMBLY

WELDMENT WITH W16x40 BEAM

NAME

DATE

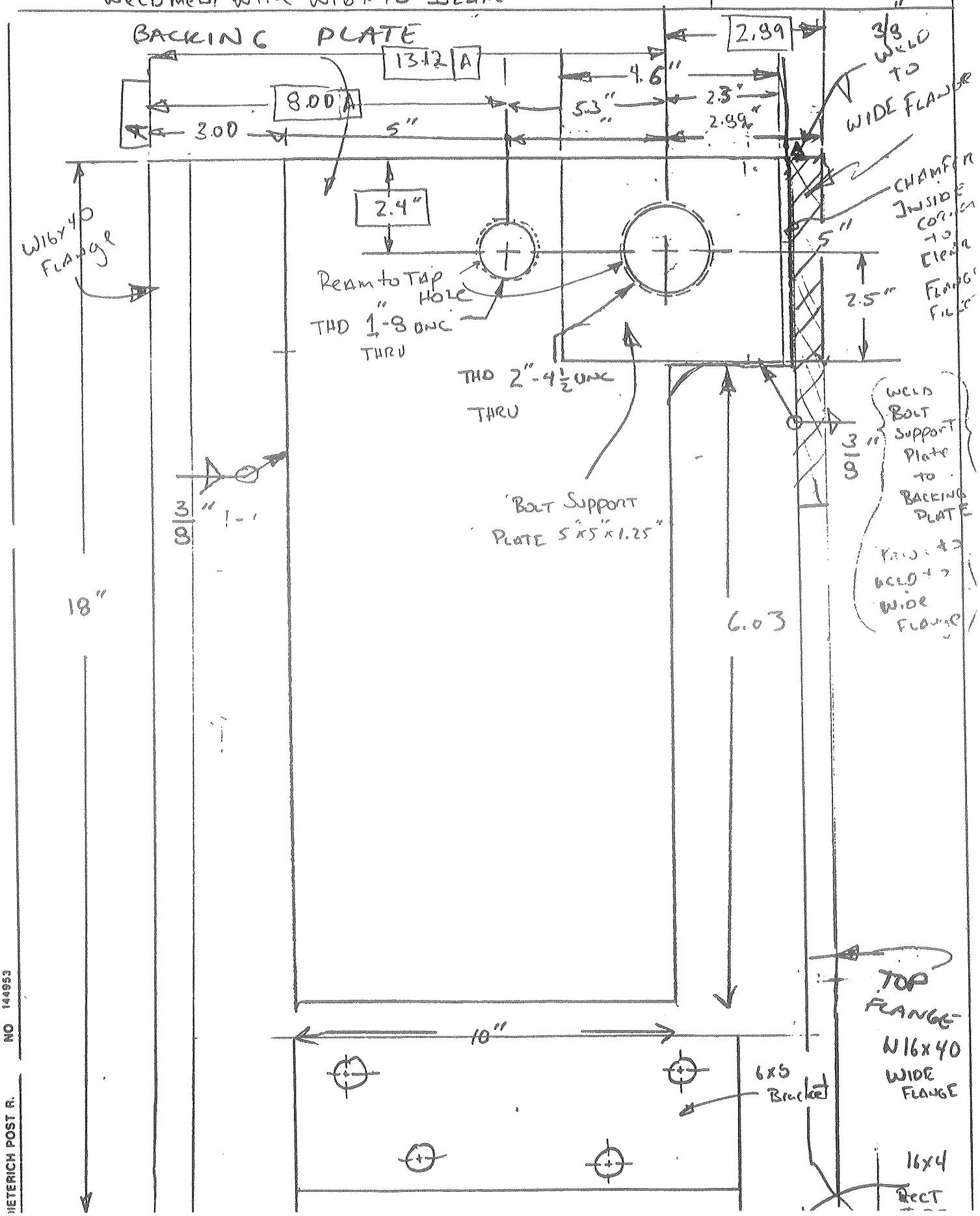

NO 144953

DETERICH POST R.

LAWRENCE LIVERMORE LABORATORY - UNIVERSITY OF CALIFORNIA

ENGINEERING NOTE

FILE NO.

PAGE 1/8

SUBJECT STRONGBACK LIFTING ASSEMBLY

NAME ALAIN INUGAI

WELDMENT

DATE

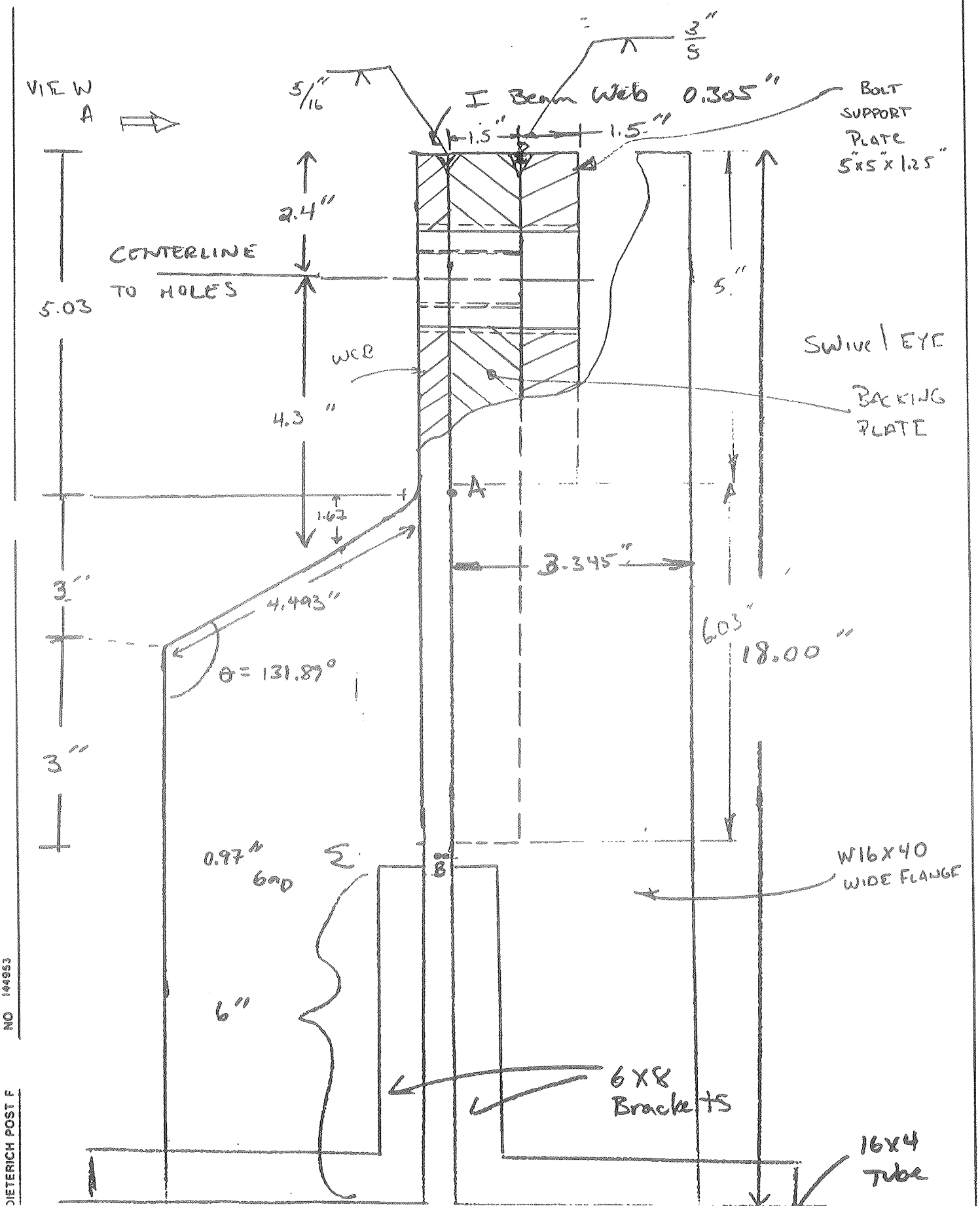

NO 144953

DIETERICH POST F

P. A. Howe

the Crosby group

amhoist AMERICAN HOIST & DERRICK COMPANY

Crosby-Laughlin® Lebus® McKissick Western National

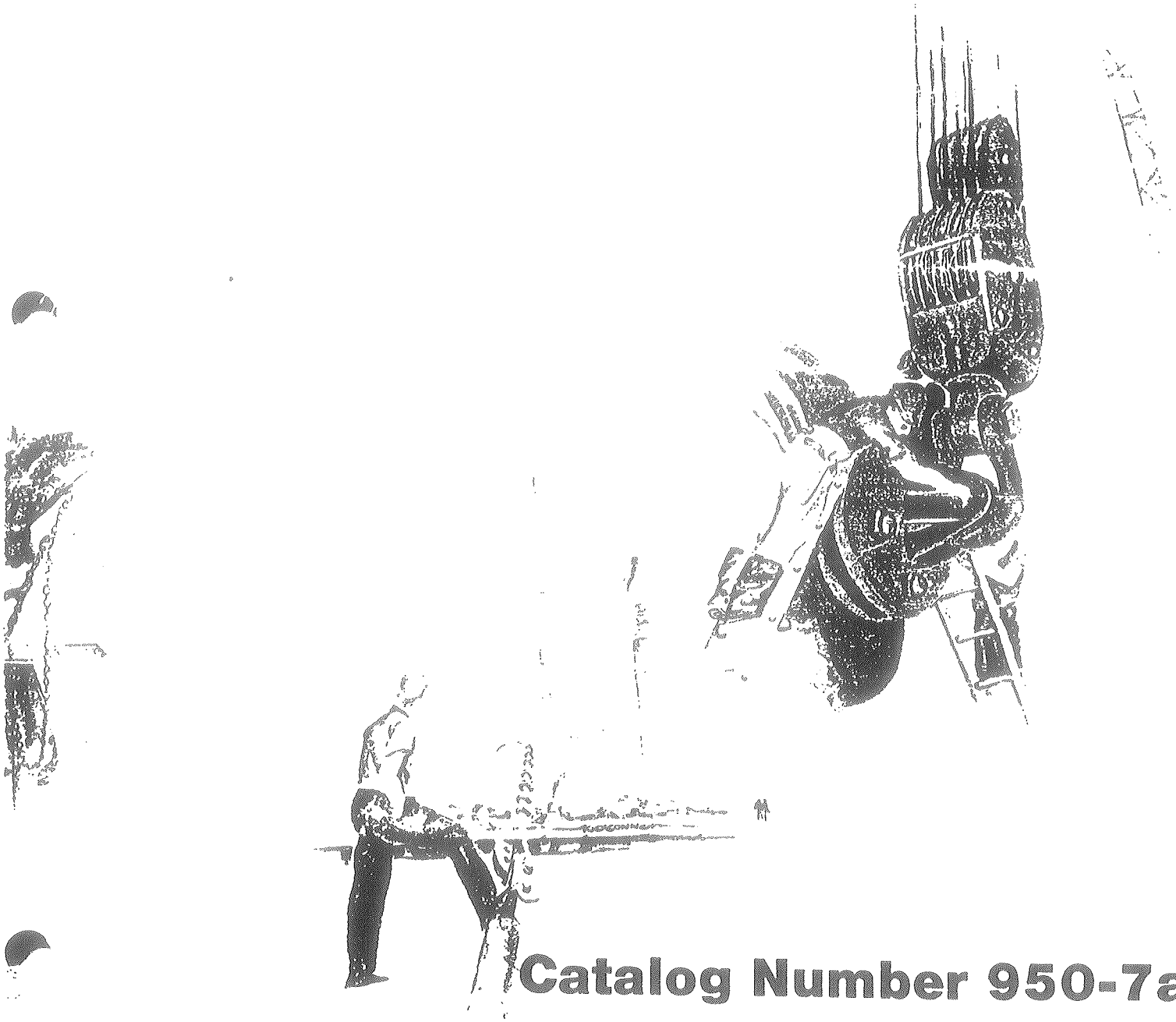

Catalog Number 950-7a

FORGED SHACKLES

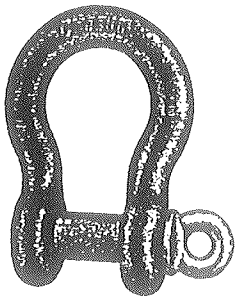

G-209 S-209

Screw pin anchor shackles meet Federal Specification RR-C-271b Type IV Class 1.

Load Rated®

- Safe Working Load permanently shown on every shackle.
- Forged, Quenched and Tempered, with alloy pins.
- Capacities 1/3 thru 150 tons.
- Look for the red color . . . mark of genuine Crosby-Laughlin quality.
- Shackles can be furnished proof tested with certificates per requirements of A.B.S. and/or I.C.G.B. Charges for proof testing and certification available on request.

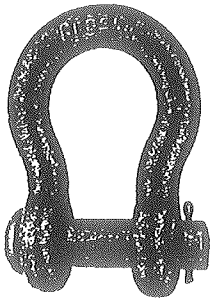

G-213 S-213

Round pin anchor shackles meet Federal Specification RR-C-271b Type IV Class 4.

Safe Working Load Tons	Nominal Shackle Size Inches	DIMENSIONS IN INCHES							Weight Pounds Each
		Inside Length	Inside Width		Diameter		Tolerance Plus or Minus		
			at Pin	at Bow	Pin	Outside of Eye	Length	Width	
† 1/3	3/16	7/8	3/8	11/16	1/4	9/16	1/16	1/16	.05
1/2	1/4	1 1/8	1/2	25/32	5/16	11/16	1/16	1/16	.11
3/4	5/16	1 7/32	17/32	27/32	3/8	13/16	1/16	1/16	.17
1	3/8	1 7/16	21/32	1 1/32	7/16	31/32	1/8	1/16	.31
1 1/2	7/16	1 11/16	23/32	1 5/32	1/2	1 1/16	1/8	1/16	.43
2	1/2	1 7/8	13/16	1 5/16	5/8	1 3/16	1/8	1/16	.65
3 1/4	5/8	2 3/8	1 1/16	1 11/16	3/4	1 9/16	1/8	1/16	1.33
4 3/4	3/4	2 13/16	1 1/4	2	7/8	1 7/8	1/4	1/16	2.32
6 1/2	7/8	3 5/16	1 7/16	2 9/32	1	2 1/8	1/4	1/16	3.40
8 1/2	1	3 3/4	1 11/16	2 11/16	1 1/8	2 3/8	1/4	1/16	5.19
9 1/2	1 1/8	4 1/4	1 13/16	2 29/32	1 1/4	2 5/8	1/4	1/16	6.97
12	1 1/4	4 11/16	2 1/32	3 1/4	1 3/8	3	1/4	1/16	10.13
13 1/2	1 3/8	5 3/16	2 1/4	3 1/2	1 1/2	3 5/16	1/4	1/8	13.75
17	1 1/2	5 3/4	2 3/8	3 7/8	1 5/8	3 5/8	1/4	1/8	17.90
25	1 3/4	7	2 7/8	5	2	4 1/8	3/4	1/8	29.46
35	2	7 3/4	3 1/4	5 3/4	2 1/4	5	3/4	1/8	46.10
†55	2 1/2	10 1/2	4 1/8	7 1/4	2 3/4	6	3/4	1/4	89.50

†Furnished in screw pin only.

TRAWLING SHACKLES

S-2131

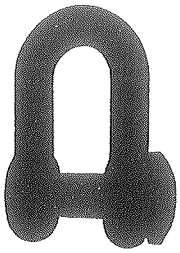

Trawling shackle with thin square head with screw pin.

Safe Working Load Tons	Nominal Shackle Size Inches	DIMENSIONS IN INCHES						Weight Pounds Each
		Inside Length	Inside Width at Pin	Diameter		Tolerances Plus or Minus		
				Pin	Outside of Eye	Length	Width	
2	1/2	1 5/8	13/16	5/8	1 3/16	1/8	1/16	.63
3 1/4	5/8	2	1 1/16	3/4	1 9/16	1/8	1/16	1.24
4 3/4	3/4	2 3/8	1 1/4	7/8	1 7/8	1/4	1/16	2.18
6 1/2	7/8	2 13/16	1 7/16	1	2 1/8	1/4	1/16	3.28
8 1/2	1	3 3/16	1 11/16	1 1/8	2 3/8	1/4	1/16	4.66

NOTE: Proof load 2.2 times Safe Working Load. Minimum Ultimate Strength is 6 times the Safe Working Load.

FORGED SHACKLES

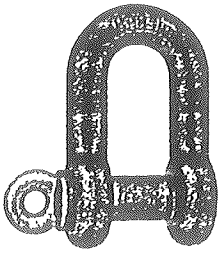

G-210 S-210
Screw pin chain shackles meet Federal Specification RR-C-271b Type IV Class 2.

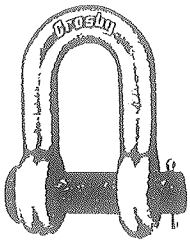

G-215 S-215
Round pin chain shackles meet Federal Specification RR-C-271b Type IV Class 5.

Load Rated®

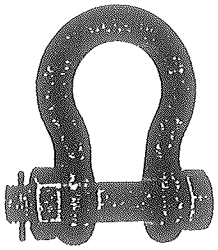

G-2130 S-2130
Bolt type anchor shackles with thin head bolt — nut with cotter pin. Meets Federal Specification RR-C-271b Type IV Class 6.

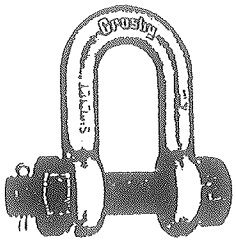

G-2150 S-2150
Bolt type chain shackles. Thin hex head bolt — nut with cotter pin.

[illegible]

Safe Working Load Tons	Nominal Shackle Size Inches	DIMENSIONS IN INCHES						Weight Pounds Each
		Inside Length	Inside Width	Tolerance Plus or Minus		Diameter		
				Length	Width	Pin	Outside of Eye	
1/2	1/4	7/8	15/32	1/16	1/16	5/16	11/16	10
3/4	5/16	1 1/32	17/32	1/16	1/16	3/8	13/16	18
1	3/8	1 1/4	21/32	1/8	1/16	7/16	31/32	25
1 1/2	7/16	1 7/16	23/32	1/8	1/16	1/2	1 1/16	41
2	1/2	1 5/8	13/16	1/8	1/16	5/8	1 3/16	61
3 1/4	5/8	2	1 1/16	1/8	1/16	3/4	1 9/16	1 21
4 3/4	3/4	2 3/8	1 1/4	1/4	1/16	7/8	1 7/8	2.12
6 1/2	7/8	2 13/16	1 7/16	1/4	1/16	1	2 1/8	3.28
8 1/2	1	3 3/16	1 11/16	1/4	1/16	1 1/8	2 3/8	4 63
9 1/2	1 1/8	3 9/16	1 13/16	1/4	1/16	1 1/4	2 5/8	6.30
12	1 1/4	3 15/16	2 1/32	1/4	1/8	1 3/8	3	9.24
13 1/2	1 3/8	4 1/8	2 1/4	1/4	1/8	1 1/2	3 5/16	12.19
17	1 1/2	4 13/16	2 3/8	1/4	1/8	1 5/8	3 5/8	16.15
25	1 3/4	5 3/4	2 7/8	3/4	1/8	2	4 1/8	26.96
35	2	6 3/4	3 1/4	3/4	1/8	2 1/4	5	39.35
* 55	2 1/2	8	4 1/8	3/4	1/4	2 3/4	6	71.00

*Furnished in Screw Pin Only.

[illegible] ANCHOR & CHAIN SHACKLES

Safe Working Load Tons	Nominal Shackle Size Inches	DIMENSIONS IN INCHES							Weight Pounds Each	
		Inside Length		Inside Width at Pin	Diameter		Tolerances Plus or Minus			
		2130	2150		Pin	Outside of Eye	Length	Width	2130	2150
2	1/2	1 7/8	1 5/8	13/16	5/8	1 3/16	1/8	1/16	.79	75
3 1/4	5/8	2 3/8	2	1 1/16	3/4	1 9/16	1/8	1/16	1.60	1.47
4 3/4	3/4	2 13/16	2 3/8	1 1/4	7/8	1 7/8	1/4	1/16	2.72	2.52
6 1/2	7/8	3 5/16	2 13/16	1 7/16	1	2 1/8	1/4	1/16	3.95	3.83
8 1/2	1	3 3/4	3 3/16	1 11/16	1 1/8	2 3/8	1/4	1/16	6.12	5.55
9 1/2	1 1/8	4 1/4	3 9/16	1 13/16	1 1/4	2 5/8	1/4	1/16	8.27	7.60
12	1 1/4	4 11/16	3 15/16	2 1/32	1 3/8	3	1/4	1/16	11.71	10.81
13 1/2	1 3/8	5 3/16	4 3/8	2 1/4	1 1/2	3 5/16	1/4	1/8	15.83	14.26
17	1 1/2	5 3/4	4 13/16	2 3/8	1 5/8	3 5/8	1/4	1/8	20.80	19.03
25	1 3/4	7	5 3/4	2 7/8	2	4 1/8	3/4	1/8	33.91	31.40
35	2	7 3/4	6 3/4	3 1/4	2 1/4	5	3/4	1/8	51.75	45.00
55	2 1/2	10 1/2	8	4 1/8	2 3/4	6	3/4	1/4	101.59	83.59
85	3	13	8 1/2	5	3 1/4	6 1/2	1/4	1/4	178	139.00
*120	3 1/2	14 5/8	—	5 1/4	3 3/4	8	1/4	1/4	265	—
*150	4	14 1/2	—	5 1/2	4 1/4	9	1/4	1/4	338	—

NOTE: Proof Load is 2.2 times the Safe Working Load. Minimum Ultimate Load is 6 times the Safe Working Load.

*Furnished Anchor Shackle only.

SWIVEL HOIST RINGS

BODY, RING: 4140 STEEL, HEAT TREATED RC 43-48
SCREW: ALLOY STEEL, HEAT TREATED RC 39-43
BLACK OXIDE FINISH OR CADMIUM PLATED

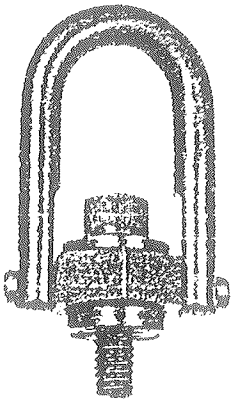

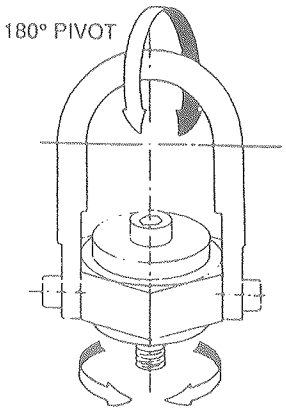

NOW ALSO AVAILABLE CADMIUM PLATED & IN METRIC SIZES!

Pivots 180° and rotates 360° simultaneously to allow lifting from any direction. Choice of bolt lengths available: use the shortest only for steel plates, the other lengths for weaker materials and for through-hole mounting with a washer and nut.

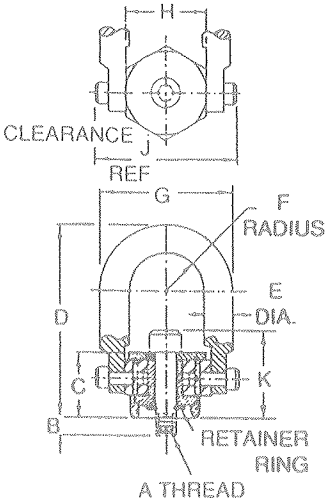

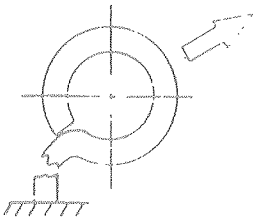

Conventional eye bolt under heavy side load.

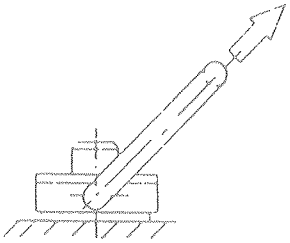

Swivel hoist ring under same load.

USA

PART NO. BLACK OXIDE	PART NO. CADMIUM PLATED	LOAD RATING (LBS)*	A	B	C	D	E DIA	F	G	H	J	K	INSTALLATION TORQUE (FT-LB)
CL-800-SHR-1	CL-800-SHR-1-C	800	5/16-18	5/16	.71	2-5/8	3/8	7/16	1-5/8	1	2	1.02	7
CL-800-SHR-2	CL-800-SHR-2-C			9/16									
CL-1000-SHR-1	CL-1000-SHR-1-C	1000	3/8-16	9/16	.71	2-5/8	3/8	7/16	1-5/8	1	2	1.09	12
CL-2500-SHR-1	CL-2500-SHR-1-C	2500	1/2-13	3/4	1.22	4-3/4	3/4	7/8	3-1/4	2	3-5/8	1.72	28
CL-2500-SHR-2	CL-2500-SHR-2-C			1									
CL-2500-SHR-3	CL-2500-SHR-3-C			1-1/4									
CL-4000-SHR-1	CL-4000-SHR-1-C	4000	5/8-11	3/4	1.22	4-3/4	3/4	7/8	3-1/4	2	3-5/8	1.85	60
CL-4000-SHR-2	CL-4000-SHR-2-C			1									
CL-4000-SHR-3	CL-4000-SHR-3-C			1-1/4									
CL-5000-SHR-1	CL-5000-SHR-1-C	5000	3/4-10	1	1.22	4-3/4	3/4	7/8	3-1/4	2	3-5/8	1.97	100
CL-5000-SHR-2	CL-5000-SHR-2-C			1-1/2									
CL-7000-SHR-1		7000	3/4-10	1	1.71	6-1/2	1	1-13/32	4-13/16	3	5-11/16	2.46	100
CL-7000-SHR-2				1-1/2									
CL-8000-SHR-1		8000	7/8-9	1	1.71	6-1/2	1	1-13/32	4-13/16	3	5-11/16	2.59	160
CL-8000-SHR-2				1-3/8									
CL-10000-SHR-1		10000	1-8	1-1/4	1.71	6-1/2	1	1-13/32	4-13/16	3	5-11/16	2.71	230
CL-10000-SHR-2				1-1/2									
CL-10000-SHR-3				2-1/4									

METRIC

CLM-800-SHR-2		800	M8	.67	.71	2-5/8	3/8	7/16	1-5/8	1	2	1.02	7
1000-SHR-1		1000	M10									1.09	12
2500-SHR-1		2500	M12	.75	1.22	4-3/4	3/4	7/8	3-1/4	2	3-5/8	1.72	28
4000-SHR-2		4000	M16	1.14								1.85	60

*Safety factor = 5:1

HOIST RINGS

29525T

Side-Pull Style

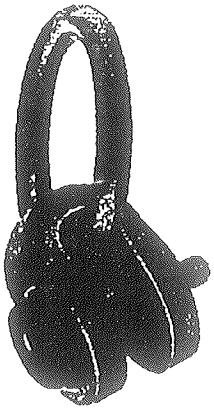

The full swivel and pivot action of the Jergens Hoist Ring allows you to flip and turn parts without unhooking. Plus, the **extra-large diameter** rings let you use almost any size hook.

- Convenient part handling
- Rated at 5:1 Strength Factor
- Material: Alloy Steel
- Clevis, Ring, Bushing and Cap Screw are magnetic particle inspected
- Clevis is x-rayed
- Finish: Black Oxide
- 200% Proof Tested
- Available in FixturePro™ Design Software and PartSpec CD

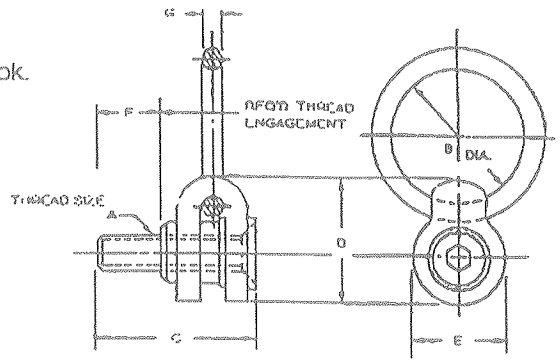

Side-Pull Hoist Rings

PART NUMBER	LOAD[1] CAPACITY (lbs)	A	B	C	D	E	F	G	TORQUE[2] ft./ lbs.	WT. (lbs)
47311	650	5/16-18	2	2 1/8	2	1 1/2	5/8	3/8	3.5	.25
47312	800	3/8-16	2	2 3/8	2	1 1/2	3/4	3/8	4.5	.25
47313	1800	1/2-13	3	3 3/8	3 3/16	2 3/8	1	5/8	15.0	3.25
47314	2500	5/8-11	3	3 5/8	3 3/16	2 3/8	1 1/4	5/8	25.0	3.25
47315	4100	3/4-10	4	5	5	3 3/4	1 1/2	1	50.0	11.25
47316	7100	1-8	4	5 3/8	5	3 3/4	2	1	90.0	11.50
47317	14000	1 1/4-7	6	6 7/8	6 13/16	4 5/8	2	1 3/8	150.0	27.75
47317-08	14000	1 1/4-8	6	6 7/8	6 13/16	4 5/8	2	1 3/8	150.0	27.75
47318	17200	1 1/2-6	6	7 7/8	6 13/16	4 5/8	2 1/2	1 3/8	250.0	31.50
47318-08	17200	11/2-8	6	7 7/8	6 13/16	4 5/8	2 1/2	1 3/8	250.0	31.50
47319	29000	2-4 1/2	5 1/4 x 10 1/2	10	6 13/16	4 5/8	3 1/8	1 1/2	300.0	42.00
47319-08	29000	2-8	5 1/4 x 10 1/2	10	6 13/16	4 5/8	3 1/8	1 1/2	300.0	42.00

[1] Stated load capacity based on specific thread torques as shown in chart.
[2] It is recommended that these torques be used when installing hoist rings.

Replacement Bolts

PART NUMBER	THREAD SIZE	WT. (lbs)
47341	5/16-18	.05
47342	3/16-16	.06
47343	1/2-13	.17
47344	5/8-11	.28
47345	3/4-10	.59
47346	1-8	1.27
47347	1 1/4-7	2.50
47347-08	1 1/4-8	2.50
47348	1 1/2-6	4.70
47348-08	1 1/2-8	4.70
47349	2-4 1/2	9.50
47349-08	2-8	9.50

Hoist Ring Hold Down Clips

Two or more Hoist Ring Hold Down Clips should be used to prevent ring movement when the hoist ring is not in use. These simple spring steel clips prevent ring movement, provide an additional safety feature when used around machine tools and give a neat finished appearance.

- Material: Spring, Steel
- Finish: Cadmium or Zinc

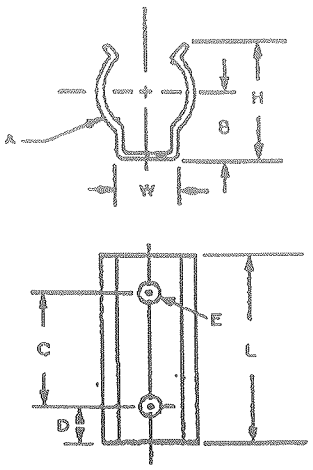

PART NUMBER	DIAMETER A	B	C	D	E	H	W	L
47331	3/8	.330	—	.250	.125	.575	.320	.500
47332	1/2	.388	.250	.125	.151	.712	.385	.500
47333	5/8	.450	.250	.125	.151	.832	.385	.500
47334	3/4	.513	.312	.156	.151	1.000	.385	.625
47335	1	.683	.312	.188	.188	1.133	.510	.687
47336	1 1/4	.750	.625	.187	.162	1.370	1.330	1.000
47337	1 3/8	.880	.312	.188	.188	1.439	.510	.688
47338	1 7/16	.850	.937	.312	.103	1.560	1.560	1.500
47339	1 3/4	1.070	.312	.188	.130	1.830	.780	.688

Jergens, Inc.

Cleveland, OH 44110 USA
800-537-4367, Ext. 484
FAX: 216-481-6193

Complete Line Mfrs. Of Tooling Components & Accessories: Chuck Jaws & Tool Holders; Drill Bushings; Threaded Inserts; Clamping Devices; Handwheels, Knobs & Handles; Spring & Ball Plungers; Hoist Rings; Toggle Clamps; Power Clamping Devices; Boosters & Pumps; Stainless Steel & Metric Components; Design Software Package & Automation Components.

Jarred

2-3794

Jergens®
Cleveland, Ohio

19520 Nottingham Rd.
Cleveland, OH 44110 USA
PH: 1 - 216 - 486-2100 1 - 800 - JERGENS (537-4367)
FAX: 1 - 216 - 481-6193

FACSIMILE COVER PAGE

Date: _____ Time: _____

TO: Ken Boyden

COMPANY: Lawrence Livermore Labs.

FAX # 510 - 424 - 3874

FROM: Janet Stenger

No. of pages (including this one) _____

They also make outer pull

P:\filemsc\faxcvr.pm6
120396\nc

Heav, 'y Safety Hoist Rings

Bolt Size	Torque, Ft. Lbs.	Inside Bale Radius	Dimensions A	B	C	D	Work Load Limit, Lbs.	No.	NET EACH
5/16"-18	7	0.43"	1.61"	3/8"	0.29"	2.67"	800	3052T102	$60.31
5/16"-18	7	0.43"	1.61"	3/8"	0.54"	2.67"	800	3052T55 ◆	60.31
3/8"-16	12	0.43"	1.61"	3/8"	0.54"	2.67"	1,000	3052T56 ◆	$60.31
1/2"-13	28	0.70"	2.40"	1/2"	1.07"	3.77"	2,500	3052T57	$73.32
1/2"-13	28	0.88"	3.25"	3/4"	0.78"	4.78"	2,500	3052T58	74.47
1/2"-13	28	0.88"	3.25"	3/4"	0.78"	6.72"	2,500	3052T86	80.14
1/2"-13	28	0.88"	3.25"	3/4"	1.03"	4.78"	2,500	3052T72	74.47
1/2"-13	28	0.88"	3.25"	3/4"	1.03"	6.72"	2,500	3052T87	80.14
1/2"-13	28	0.88"	3.25"	3/4"	1.28"	4.78"	2,500	3052T81 ◆	77.52
1/2"-13	28	0.88"	3.25"	3/4"	1.28"	6.72"	2,500	3052T88	80.14
5/8"-11	60	0.88"	3.25"	3/4"	0.78"	4.78"	4,000	3052T73	$72.58
5/8"-11	60	0.88"	3.25"	3/4"	1.03"	4.78"	4,000	3052T59	74.22
5/8"-11	60	0.88"	3.25"	3/4"	1.03"	6.72"	4,000	3052T89	80.14
5/8"-11	60	0.88"	3.25"	3/4"	1.28"	4.78"	4,000	3052T61 ◆	74.22
5/8"-11	60	0.88"	3.25"	3/4"	1.28"	6.72"	4,000	3052T91	80.14
3/4"-10	100	0.88"	3.25"	3/4"	1.03"	4.78"	5,000	3052T62	$74.22
3/4"-10	100	0.88"	3.25"	3/4"	1.03"	6.72"	5,000	3052T92	80.14
3/4"-10	100	0.88"	3.25"	3/4"	1.53"	4.78"	5,000	3052T63 ◆	74.22
3/4"-10	100	0.88"	3.25"	3/4"	1.53"	6.72"	5,000	3052T93	80.14
3/4"-10	100	1.40"	4.80"	1"	1.04"	6.52"	7,000	3052T64	154.33
3/4"-10	100	1.40"	4.80"	1"	1.04"	8.11"	7,000	3052T94	170.53
3/4"-10	100	1.40"	4.80"	1"	1.54"	6.52"	7,000	3052T82 ◆	164.22
3/4"-10	100	1.40"	4.80"	1"	1.54"	8.11"	7,000	3052T95	170.53
7/8"-9	160	1.40"	4.80"	1"	1.04"	6.52"	8,000	3052T65 ◆	$167.67
7/8"-9	160	1.40"	4.80"	1"	1.04"	8.11"	8,000	3052T96	177.63
1"-8	230	1.40"	4.93"	1"	1.29"	6.52"	10,000	3052T66	$166.23
1"-8	230	1.40"	4.93"	1"	1.29"	8.11"	10,000	3052T97	177.63
1"-8	230	1.40"	4.93"	1"	1.54"	6.52"	10,000	3052T67	169.69
1"-8	230	1.40"	4.93"	1"	1.54"	8.11"	10,000	3052T98	177.63
1"-8	230	1.40"	4.93"	1"	2.29"	6.52"	10,000	3052T83 ◆	177.14
1"-8	230	1.40"	4.93"	1"	2.29"	8.11"	10,000	3052T101	177.63
1 1/4"-7	470	1.75"	6.00"	1 1/4"	1.89"	8.73"	15,000	3052T68	$274.95
1 1/2"-6	800	2.25"	8.00"	1 3/4"	2.70"	12.47"	24,000	3052T74	$342.39
2"-4 1/2	800	2.25"	8.00"	1 3/4"	2.96"	12.47"	30,000	3052T69	$427.08
2 1/2"-8	2100	3.00"	10.50"	2 1/4"	4.00"	16.87"	50,000	3052T77	$1292.04
2 1/2"-4	2100	3.00"	10.50"	2 1/4"	4.00"	16.87"	50,000	3052T75	$1292.04
3"-4	4300	3.75"	13.00"	2 3/4"	5.20"	19.50"	75,000	3052T76	$2158.22

Large Opening Swivel Hoist Rings

Bolt Size	Thread Torque, Ft.-Lbs.	Inside Bale Radius	Dimensions A	B	C	D	Work Load Limit, Lbs.	No.	NET EACH
5/16"-18	7	0.65"	2.29"	0.44"	0.56"	3.23"	800	2994T61	$52.68
5/16"-18	7	0.65"	2.29"	0.44"	1.06"	3.23"	800	2994T62	52.68
3/8"-16	12	0.65"	2.29"	0.44"	0.56"	3.23"	1000	2994T63	$52.68
3/8"-16	12	0.65"	2.29"	0.44"	1.06"	3.23"	1000	2994T64	52.68
1/2"-13	28	0.88"	3.13"	0.75"	1.00"	4.71"	2500	2994T65	$62.05
1/2"-13	28	0.88"	3.13"	0.75"	1.25"	4.71"	2500	2994T66	63.14
5/8"-11	60	0.88"	3.13"	0.75"	1.00"	4.71"	4000	2994T67	$64.26
5/8"-11	60	0.88"	3.13"	0.75"	1.25"	4.71"	4000	2994T68	64.26
3/4"-10	100	0.88"	3.13"	0.75"	1.00"	4.71"	5000	2994T69	$65.52
3/4"-10	100	0.88"	3.13"	0.75"	1.50"	4.71"	5000	2994T71	66.69
3/4"-10	100	1.40"	5.10"	1.00"	1.20"	7.00"	7000	2994T72	125.75
3/4"-10	100	1.40"	5.10"	1.00"	1.70"	7.00"	7000	2994T73	128.84
7/8"-9	160	1.40"	5.10"	1.00"	1.20"	7.00"	8000	2994T74	$127.51
1"-8	230	1.40"	5.10"	1.00"	1.45"	7.00"	10,000	2994T75	$130.63
1"-8	230	1.40"	5.10"	1.00"	1.70"	7.00"	10,000	2994T76	131.77
1"-8	230	1.40"	5.10"	1.00"	2.45"	7.00"	10,000	2994T77	132.46

Hoist Rings with Stationary Base

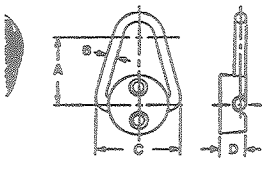

Forged alloy steel rings are heat treated with a black oxide finish. Rings pivot 180°. Mounting screw is included. To obtain maximum load, high strength screws must be used.

Screw Length	Dimensions A	B	C	D	Work Load Limit, Lbs.	No.	NET EACH
5/16"-18 THREAD							
1 1/4"	2"	5/16"	2 1/2"	3/4"	2000	29505T21	$14.24
3/8"-16 THREAD							
1 1/4"	2 1/2"	3/8"	3 3/16"	7/8"	2500	29505T22	16.78
1/2"-13 THREAD							
2"	3"	1/2"	3 7/8"	1 1/8"	5000	29505T23	25.19

Heavy Duty Metric Hoist Rings

Rings piv... swivel 360° to compensate for pitch, roll, an... when lifting unbalanced loads. Risks are redu... lifting, moving, and turning heavy equipment. Units are made of alloy steel. For standard thread hoist rings, see page 510. SAFETY NOTE: Loosening may occur after prolonged service in a permanent installation. Retighten mounting screws periodically to maintain the specified torque.

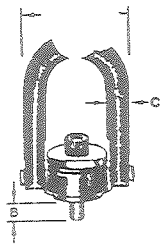

Bolt Size	Thread Torque kg/m	Inside Bale Radius, mm	Dimensions, mm A	B	C	Work Load Limits★ Lbs.	kg	No.	NET EACH
M8 × 1.25mm	1.0	10.9	46.7	12.5	9.7	880	400	29495T41	$82.04
M10 × 1.50mm	1.7	10.9	46.7	17.5	9.7	990	450	29495T42	82.04
M12 × 1.75mm	3.8	22.4	89.4	19.0	19.0	2,310	1,050	29495T43	96.89
M16 × 2.00mm	8.2	22.4	89.4	29.0	19.0	4,180	1,900	29495T44	96.89
M20 × 2.50mm	13.6	22.4	89.4	34.0	19.0	4,730	2,150	29495T45	96.89
M20 × 2.50mm	13.6	35.6	130.6	32.0	25.4	6,610	3,000	29495T46	211.10
M24 × 3.00mm	31.0	35.6	130.6	37.0	25.4	9,250	4,200	29495T47	211.10
M30 × 3.50mm	60.0	44.5	165.1	41.9	31.7	15,430	7,000	29495T48	340.25
M30 × 3.50mm	60.0	44.5	165.1	61.7	31.7	15,430	7,000	29495T49	340.25
M36 × 4.00mm	100.0	57.2	217.2	63.5	44.4	24,250	11,000	29495T51	468.27
M42 × 4.50mm	100.0	57.2	217.2	82.4	44.4	27,550	12,500	29495T52	512.13
M48 × 5.00mm	100.0	27.2	217.2	82.4	44.4	29,760	13,500	29495T53	550.52

Side-Pull Hoist Rings and Hold-Down Clips

SIDE-PULL HOIST RINGS—Swivel 360° and pivot to allow user to flip and turn posts without unhooking. Extra-large diameter rings let you use almost any size hook. Rated 5:1 strength factor. Rings are made of alloy steel with a black oxide finish.

HOIST RING HOLD-DOWN CLIPS—Use two or more to prevent ring movement when the hoist ring is not in use.

Spring steel clips provide an additional safety feature for use around machine tools. Cadmium finish.

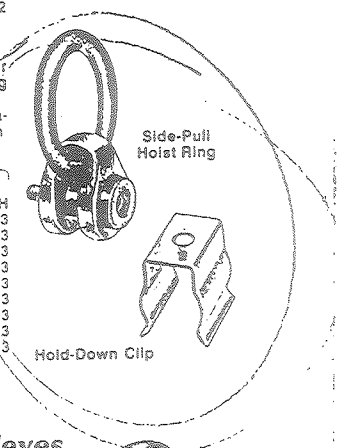

HOIST RINGS Bolt Size	Thread Torque, Ft.-Lbs.	Inside Bale Radius	Dimensions A	B	Work Load Limit, Lbs.★	No.	NET EACH	HOLD-DOWN CLIPS Dia.	No.	NET EACH
5/16"-18	3.5	2"	1 1/2"	3/8"	650	29525T72	$67.95	3/8"	29525T61	$3.83
3/8"-16	4.5	2"	1 1/2"	3/8"	800	29525T73	67.95	1/2"	29525T62	3.83
1/2"-13	15.0	3"	2 3/8"	5/8"	1,800	29525T74	92.63	5/8"	29525T63	3.83
5/8"-11	25.0	3"	2 3/8"	5/8"	2,500	29525T75	92.63	3/4"	29525T64	3.83
3/4"-10	50.0	4"	3 3/4"	1"	4,100	29525T76	176.46	1"	29525T65	3.83
1"-8	90.0	4"	3 3/4"	1"	7,100	29525T77	176.46	1 1/4"	29525T66	3.83
1 1/4"-7	150.0	6"	4 5/8"	1 3/8"	14,000	29525T78	411.63	1 3/8"	29525T67	3.83
1 1/2"-6	250.0	6"	4 5/8"	1 3/8"	17,200	29525T79	411.63	1 1/2"	29525T68	3.83
2"-4 1/2	300.0	5 1/4" × 10 1/2"	4 3/8"	1 1/2"	29,000	29525T81	636.75	1 3/4"	29525T69	3.83

Lifting Rings

Rings offer three different thread sizes for a wide variety of uses. Ideal for lifting large chucks, milling cutters, dies, and machined parts. Handle pivots 180°. For straight lift only. Do not apply side load.

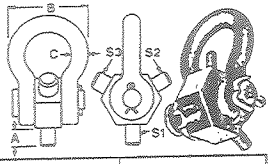

Bolt Thread Size	Dimensions A	B	C	Work Load Limit, Lbs.★	No.	NET EACH
S1 1/4"-20				400		
S2 5/16"-18	1/2"	2 1/8"	7/16"	800	2957T91	$34.32
S3 3/8"-16				1400		
S1 1/2"-13				2600		
S2 5/8"-11	3/4"	3"	5/8"	4000	2957T92	45.78
S3 3/4"-10				6000		

Stainless Steel Padeyes

Ideal for tie-down, lashing, and securing applications. The swivel allows use at an angle.

Made of Type 304 stainless steel to resist rust and corrosion. When not in use, the padeyes fold flat. NOTE: Do not use padeyes for overhead lifting.

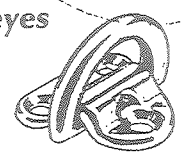

Stock Dia.	Bolt Dia.	Work Load Limit, Lbs.★	Overall Size	No.	NET EACH
1/4"	1/4"	1500	1 3/4" × 1 3/4"	33815T72	$25.64
5/16"	11/32"	2600	2 5/16" × 2 5/16"	33815T73	32.27
13/32"	13/32"	4400	2 15/16" × 2 15/16"	33815T74	47.64

Cargo-Securing Hooks and Bars

Here's a quick, simple way to secure ladders and other equipment for transport or storage. Just engage the J-hook to your load and spin the wing nut tight.

Adjustable double J-bar has a hook at each end and 10 stops at 2" intervals. Bar adjusts from 38" to 56".

Hooks and bars are available in black and white. Please specify color when ordering.

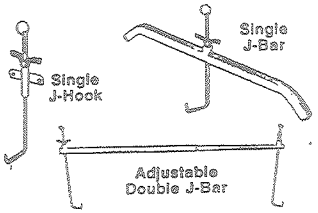

Size	No.	NET EACH
SINGLE J-HOOKS		
12"	2975T71	$13.48
18"	2975T72	13.98
SINGLE J-BARS		
12"	2975T73	19.48
18"	2975T74	19.95
ADJUSTABLE DOUBLE J-BARS		
12"	2975T75	28.95
18"	2975T76	29.95

Lift Truck Fork Extensions

Designed for handling bulky and volume loads, heavy pallets, large crates, and rolled wire goods. Ideal for use on docks to handle occasional oversized loads.

Extensions are made of rugged, 7-gauge steel. Select an extension with inside dimensions closest to the size of your fork. The lock screws adjust for up to 2" difference in width. Use the extended forks for light, bulky loads or fasten to the heel of the fork for maximum loading.

Inside Dimensions Width	Height	48" Length No.	NET/PAIR	60" Length No.	NET/PAIR	72" Length No.	NET/PAIR	84" Length No.	NET/PAIR	96" Length No.	NET/PAIR
4 1/2"	2 1/4"	2462T12	$136.24	2462T22	$173.28	2462T32	$249.11	2462T42	$324.94	2462T52	$358.56
5 3/4"	2 1/4"	2462T14	146.72	2462T24	184.11	2462T34	259.95	2462T44	336.15	2462T54	369.77
6 1/2"	2 3/4"	2462T16	157.21	2462T26	194.95	2462T36	270.78	2462T46	347.36	2462T56	380.98

Other lengths from 24" up to 120" are available. Specify No. 2462T999, length, plus inside width and height of extension needed. Prices on request. NOTE: Extension to more than 1½ times fork length is not recommended.

★ WARNING: DO NOT EXCEED WORK LOAD LIMIT

HOIST RINGS

Jergens

Side-Pull Style

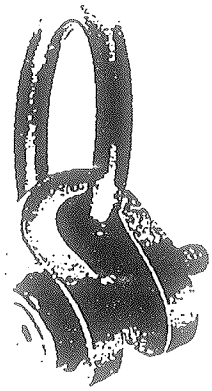

The full swivel and pivot action of the Jergens Hoist Ring allows you to flip and turn parts without unhooking. Plus, the extra-large diameter rings let you use almost any size hook.

- Convenient part handling
- Rated at 5:1 Strength Factor
- Material: Alloy Steel
- Clevis, Ring, Bushing and Cap Screw are magnetic particle inspected
- Clevis is x-rayed
- Finish: Black Oxide
- 200% Proof Tested
- Available in FixturePro™ Design Software and PartSpec CD

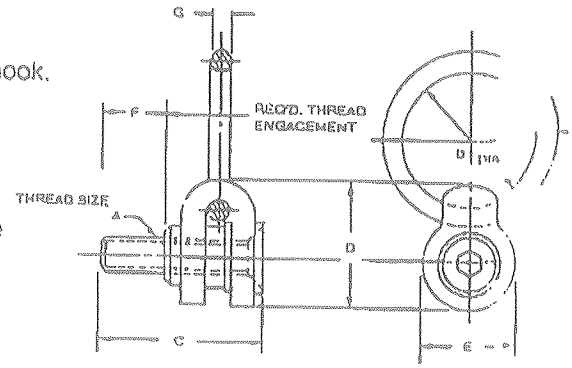

Side-Pull Hoist Rings

PART NUMBER	LOAD[1] CAPACITY (lbs)	A	B	C	D	E	F	G	TORQUE[2] (ft. lbs.)	WT. (lbs)
7311	650	5/16-18	2	2 1/8	2	1 1/2	5/8	3/8	3.5	.25
731[illegible]	800	3/8-16	2	2 3/8	2	1 1/2	3/4	3/8	4.5	.25
[illegible]	1800	1/2-13	3	3 3/8	3 3/16	2 3/8	1	5/8	15.0	3.25
[illegible]	2500	5/8-11	3	3 5/8	3 3/16	2 3/8	1 1/4	5/8	25.0	3.25
7315	4100	3/4-10	4	5	5	3 3/4	1 1/2	1	50.0	11.25
7316	7100	1-8	4	5 3/8	5	3 3/4	2	1	90.0	11.50
7317	14000	1 1/4-7	6	6 7/8	6 13/16	4 5/8	2	1 3/8	150.0	27.75
7317-08	14000	1 1/4-8	6	6 7/8	6 13/16	4 5/8	2	1 3/8	150.0	27.75
7318	17200	1 1/2-6	6	7 7/8	6 13/16	4 5/8	2 1/2	1 3/8	250.0	31.50
7318-08	17200	1 1/2-8	6	7 7/8	6 13/16	4 5/8	2 1/2	1 3/8	250.0	31.50
7319	29000	2-4 1/2	5 1/4 x 10 1/2	10	6 13/16	4 5/8	3 1/8	1 1/2	300.0	42.00
7319-08	29000	2-8	5 1/4 x 10 1/2	10	6 13/16	4 5/8	3 1/8	1 1/2	300.0	42.00

[illegible]ated load capacity based on specific thread torques as shown in chart.
[illegible]s recommended that these torques be used when installing hoist rings.

Replacement Bolts

PART NUMBER	THREAD SIZE	WT (lbs)
47341	5/16-18	[illegible]
47342	3/8-16	[illegible]
47343	1/2-13	[illegible]
47344	5/8-11	[illegible]
47345	3/4-10	[illegible]
47346	1-8	[illegible]
47347	1 1/4-7	[illegible]
47347-08	1 1/4-8	[illegible]
47348	1 1/2-6	[illegible]
47348-08	1 1/2-8	[illegible]
47349	2-4 1/2	[illegible]
47349-08	2-8	[illegible]

[illegible]oist Ring Hold Down Clips

[illegible] or more Hoist Ring Hold Down Clips should be used to prevent ring [illegible]ement when the hoist ring is not in use. These simple spring steel clips [illegible]ent ring movement, provide an additional safety feature when used [illegible]nd machine tools and give a neat finished appearance.

- Material: Spring, Steel
- Finish: Cadmium or Zinc

PART NUMBER	DIAMETER A	B	C	D	E	H	W	L
[illegible]7331	3/8	.330	—	.250	.125	.575	.320	.500
[illegible]7332	1/2	.388	.250	.125	.151	.712	.385	.500
[illegible]733[illegible]	5/8	.450	.250	.125	.151	.832	.385	.500
[illegible]	3/4	.513	.312	.156	.151	1.000	.385	.625
[illegible]	1	.683	.312	.188	.188	1.133	.510	.687
[illegible]336	1 1/4	.750	.625	.187	.162	1.370	1.330	1.000
[illegible]7337	1 3/8	.880	.312	.188	.188	1.439	.510	.688
[illegible]7338	1 7/16	.850	.937	.312	.103	1.560	1.560	1.500
[illegible]7339	1 3/4	1.070	.312	.188	.130	1.830	.780	.688

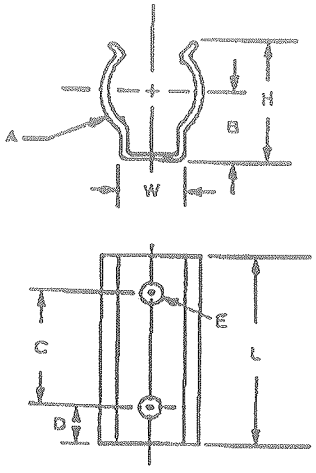

Jergens

HOIST RINGS

Installation Information

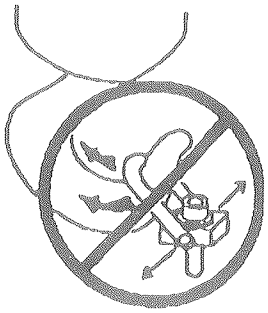

Never use a hook or other lifting device which will pry or tend to open the "U" shaped bar on Center-Pull Hoist Rings!

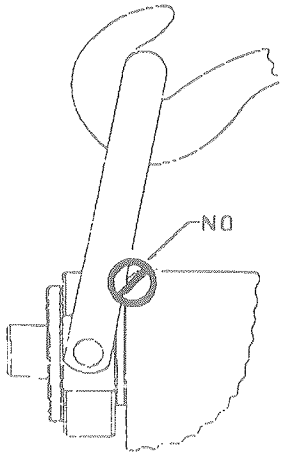

After installation, check the Hoist Ring to be sure it swivels and pivots freely in all directions. **The side of the ring must not contact *anything*!**

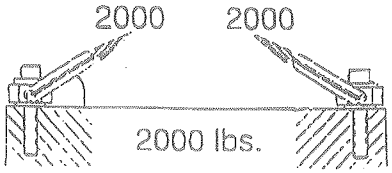

Depending upon the sling angle, **the applied load may be more than the weight being lifted.** Two point lifting of a 2000 pound weight, with a sling angle of 30°, will result in an applied load of 2000 pounds to *each* hoist ring!

Select the proper Hoist Ring for the job. Do not attempt to apply more than the rated load capacity. *The load capacity is stamped on the Hoist Ring.*

Drill and tap the workpiece so that the hoist ring bolt is installed perpendicular to the surface of the workpiece. Countersink the tapped hole to prevent "swelling" of the top thread when the hoist ring bolt is torqued. The workpiece surface must be flat, providing complete contact for the hoist ring bushing.

Do not use spacers between the hoist ring bushing and the workpiece surface.

When installing in soft metal, such as aluminum, the minimum effective thread engagement should be two times the diameter of the thread.

Always *tighten the bolt to the proper torque value*, which is stamped on the Hoist Ring.

Loosening of the *bolt* may develop during use. *Re-tightening to the required torque must be done whenever the bolt loosens.* The proper tightening torque is stamped on the Hoist Ring.

When lifting, apply force gradually. **DO NOT APPLY SHOCK LOADS.**

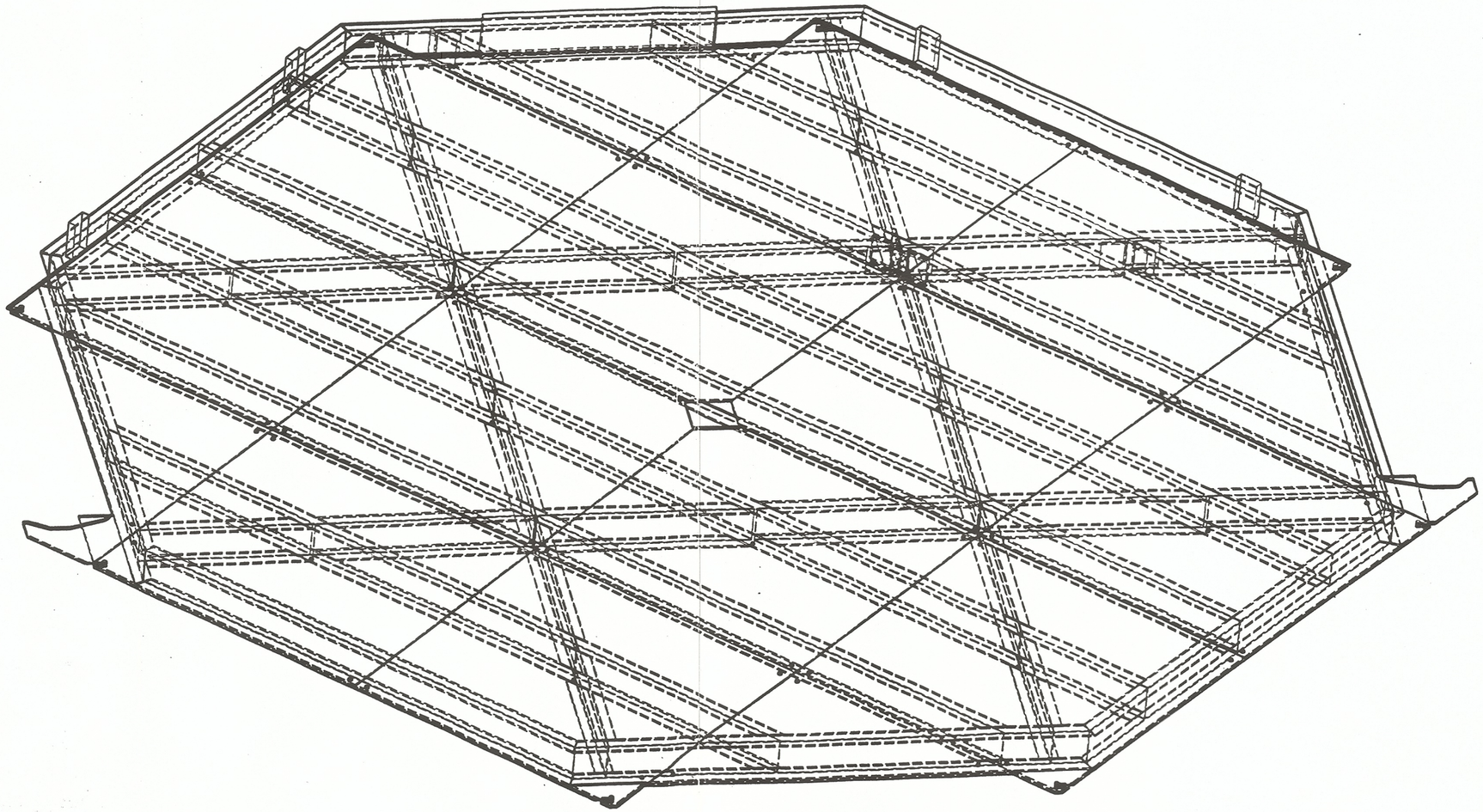

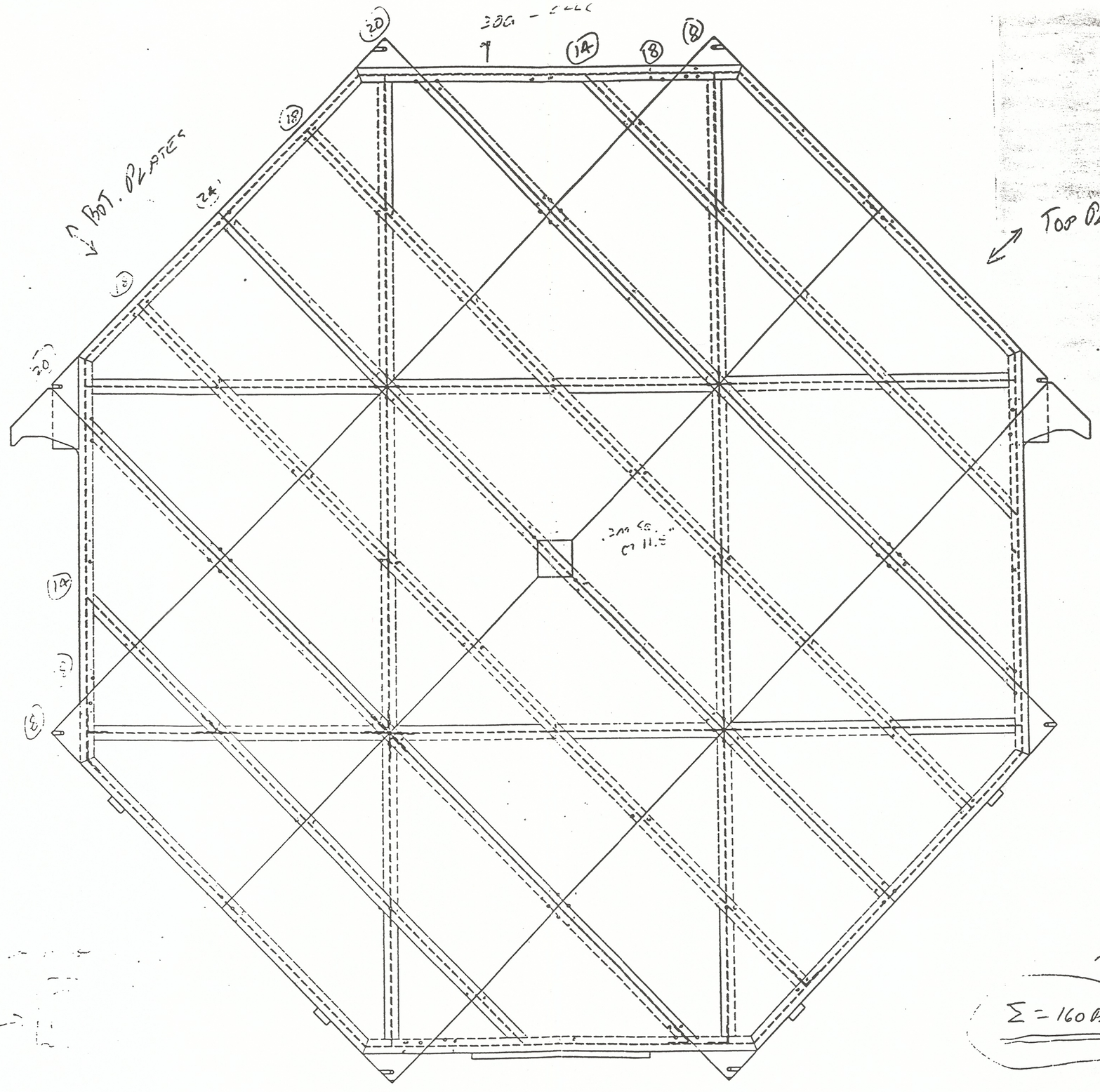

Σ = 160 PADS

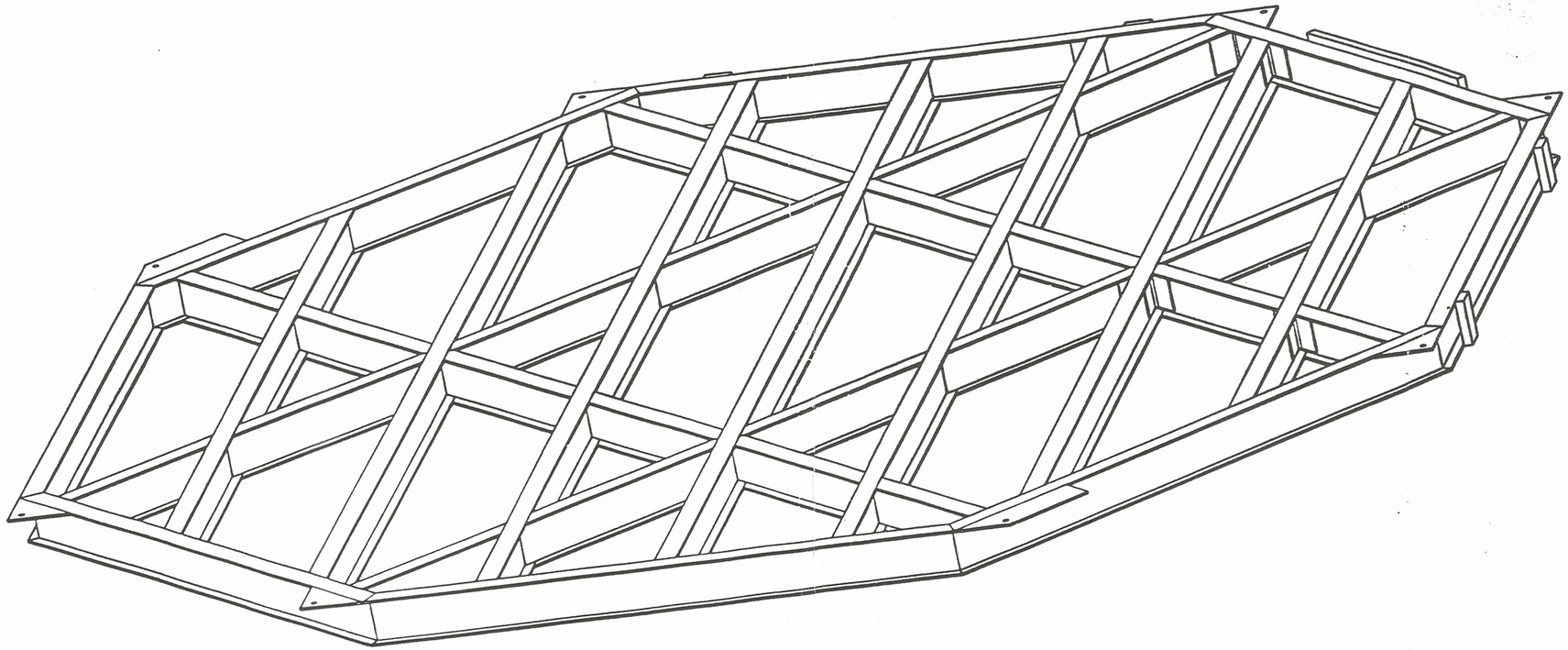

SI METRIC

THIRD ANGLE PROJECTION

NOTES
UNLESS OTHERWISE SPECIFIED:

1. ALL DIMENSIONS ARE IN MILLIMETERS.
2. DIMENSIONING AND TOLERANCING PER ANSI Y14.5M-1982.
3. SURFACE TEXTURE PER ANSI B46.1-1985. SURFACE TEXTURE SYMBOLS PER ANSI Y14.36-1978.

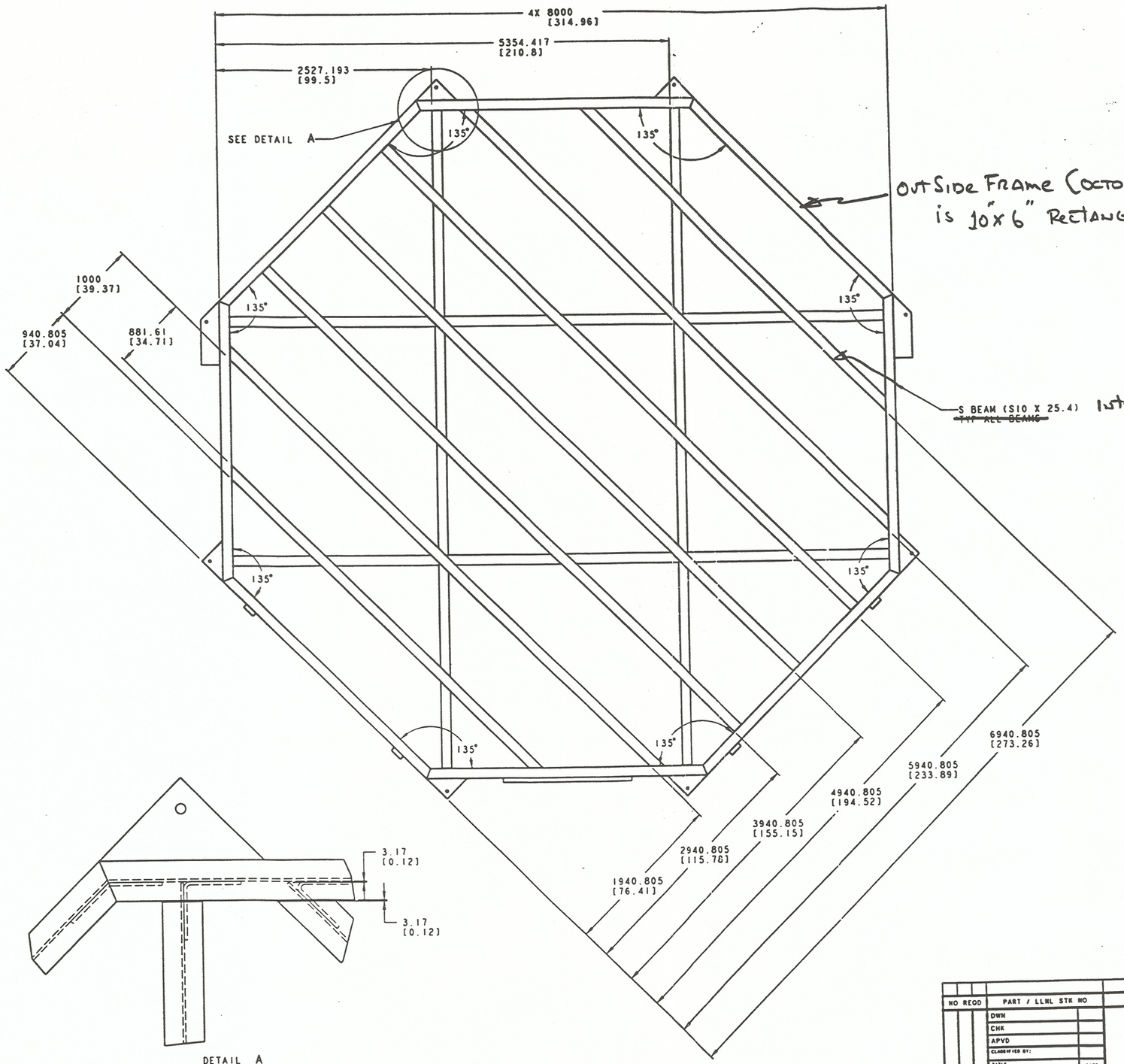

NO REQD	PART / LLNL STK NO	DESCRIPTION / MATERIAL	SPEC NO	ITEM
	DWN	CLASSIFICATION	MAJOR UNIT	( ) TITLES CLASSIFICATION
	CHK		SUBASSY	
	APVD		DETAIL	
	CLASSIFIED BY:		SHOWN ON AAA	DRAWING NO
	TITLE / DATE		ACCT NO	

LAWRENCE LIVERMORE NATIONAL LABORATORY
MECHANICAL ENGINEERING DEPT
UNIVERSITY OF CALIFORNIA

SCALE ___ SHEET ___ OF ___

LTR	DWN	CHK	APVD	DATE	ZONE	CHANGE

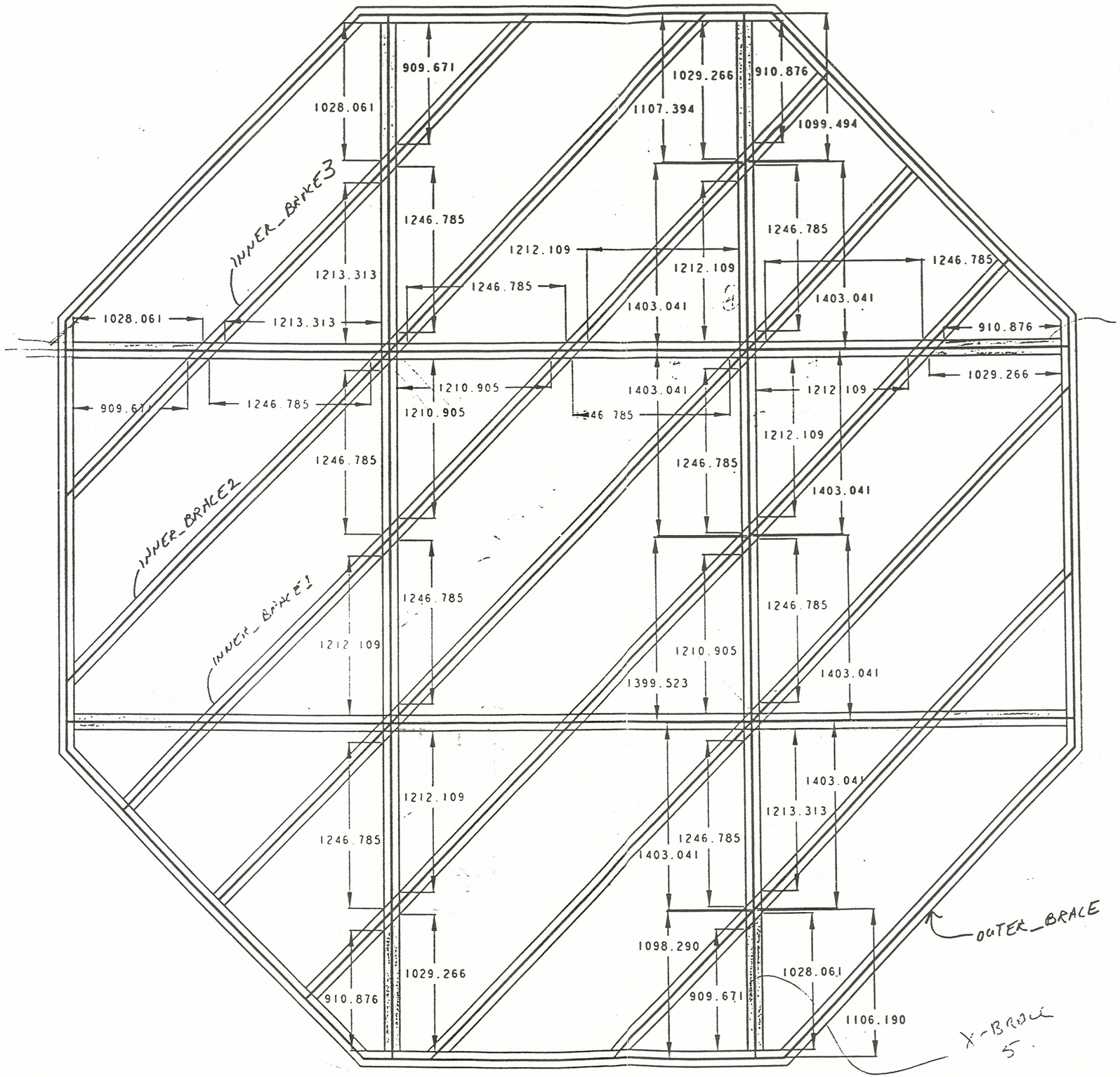
909.671
1028.061
1029.266
910.876
1107.394
1099.494
INNER_BRACE3
1246.785
1212.109
1213.313
1403.041
1028.061
910.876
1029.266
1210.905
909.671
1212.109
INNER_BRACE2
INNER_BRACE1
1399.523
1098.290
1106.190
OUTER_BRACE
X-BRACE 5
X_BRACE1
X_BRACE2
X_BRACE3
X_BRACE4
X_BRACE5