BELOW-THE-HOOK LIFTING DEVICE
Engineering Note Cover Page

Lifting Device Numbers:

FNAL Site No.:_____ if applicable Div. Specific No.: 120 if applicable Asset No. _____ if applicable

ASME B30.20 Group: (check one)
- ˇ Group I Structural and Mechanical Lifting Devices
- ˇ Group II Vacuum Lifting Devices
- ˇ Group III Magnets, Close Proximity Operated
- ˇ Group IV Magnets, Remote Operated

Device Name or Description: Strong back trans/Lifting Frame (B/C pixel octant)

Device was: (check all applicable)
- ˇ Purchased from a Commercial Lifting Device Manufacturer
  mfg. name: _____
- ˇ Designed and Built at Fermilab
- ✓ Designed by Fermilab and Built by a Vendor
  Assy drawing number: 3523.130-ME-386717
- ˇ Provided by a User or Other Laboratory
- ˇ Other. Describe: _____

Engineering Note Prepared by: Edward CHI Date: 6-30-2000

Engineering Note Reviewed by: [signature] Date: 7/26/00

Lifting Device Data:

Capacity: 2,200 lbs.

Fixture Weight: 3,500 lbs.

Service: ˇ normal ˇ heavy ˇ severe (refer to B30.20 for definitions)

Duty Cycle: _____ 8, 16 or 24 hour rating (applicable to groups III, and IV)

Inspections Frequency: _____

Rated Load Test by FNAL (if applicable): Date: _____ Load: _____

ˇ Check if Load Test was by Vendor and attach the certificate.

Satisfactory Load Test Witnessed by: _____

Signature (of Load Test Witness): _____

Notes or Special Information:

NICE JOB ED!

Fermilab

D0 STRONG-BACK TRANSPORT/LIFTING FRAME
(FOR THE B/C-LAYER PIXEL OCTANT FRAME)

D-ZERO ENGINEERING NOTE #3823.130-EN-529

Author: Edward Chi
PPD/ETT/D-Zero Upgrade Group

June 30, 2000

Reviewer: Robert Woods

CONTENTS

i. Preface

1. Weight Calculations

Weight Calculations for the Strong-back Lifting Frame 1-1

2. Center Gravity of the Strong-backer Lifting Frame Combine with Pixel Octant Frame Together

C. G. of the System in Z direction 2-1
C. G. of the System in X and Y direction 2-4

3. Structural Analysis and Calculations for the Frame Members

Analysis for the Hori. Rectangular Tube (7"x 5"x 3/16"x 244.5") 3-2, 3-6
Analysis for the Hori. Rectangular Tube (3"x 4"x 3/16"x 162.5") 3-3
Cal. for Adjustable Lifting Lug Plate 3-11
Cal. for Support Plate 3-13

4. Weld Calculations 4-1

5. Deflection Calculations 5-1

6. Load Test Procedures 6-1

7. Appendix

Copies of Related Drawings, Specifications and References

PREFACE

The B/C-layer pixel support frame is located between the D0 central calorimeter and the B/C-layer MDT. The frame is composed by 8 octant frames, each octant is mounted by numbers of pixels and photomultipliers which are designed at specific locations in different rows. The octant pixel frame is a 45 degree trapezoidal frame with sandwich type of structure in cross section. The pixels and photomultipliers are mounted to the octant frame as showing on photo-picture copy in appendix.

The Strong-back Lifting Frame is a rectangular shape steel frame, which performs two major functions:

1. As a "Structural and Mechanical Lifting Device", give the assembled pixel octant frame of the opportunity of moving, lifting and shipping to different locations horizontally and vertically.
2. As a mechanical support device, give the assembled pixel octant frame supports in far side surface to minimize the deflection during the shipment, and prevent any permanent deformation to the pixel octant frame.

The attached engineering note outlines the Lifting Frame for designing and fabricating, analyze the structures per the specifications of ASME B30.20 and Fermi ES&H Manual 5022.1-1. The scope of this note only covered function #1, which is governed by the safety of personnel and equipment to use the "Below The Hook Lifting Devices".

Because of the unavailability of the assembly drawings of the device at this moment, the author feels sorry for using the design sketches and layouts as the reference in the appendix. The related design drawings will be added to the appendix once they are available.

FERMILAB ENGINEERING NOTE	SECTION B/C layer Pixel	PROJECT upgrade	SERIAL-CATEGORY	PAGE 1.1
SUBJECT Weight cal. — strong back frame B/C transport/lifting Fixture		NAME E. CHI		
		DATE 6-24-00	REVISION DATE	

Per drawing ME-386617

Tube $7'' \times 5'' \times 3/16''$ 14.53#/FT

$l_{Tube1} = 180.25'' \times 2 + 239.50'' \times 2$
$= 849.50'' = 71$ FT

$W_{Tub1} = 1{,}032$ #

$Tube_2$ $3'' \times 3'' \times \frac{1}{4}''$

$L_{Tube2} = 59.27'' \times 2$ 8.81#/FT
$= 118.54'' = 9.88$ FT

$W_{Tub2} = 87$ #

$Tube_3$ $3'' \times 6'' \times \frac{1}{4}''$ 13.91#/FT

$L_{Tube3} = 67.57'' \times 2 = 135.14''$
$= 11.26$ FT

$W_{Tub3} = 157$ #

Boss plates for 45° BRACER:

$W_{BP1} = 0.2833\ \#\,in^{-3} \times (3.50'' + 7.00'') \times 9.0'' \times 0.5''$
$= 13.5$ #

Boss plates mtg. to the Horizontal Tube:

$W_{BP2} = 0.2833\ \#\,in^{-3} \times [(12.0'' \times 7.0'' \times 2) + (15'' + 10'' + 6.25'') \times 3.75]$

$\times 2 \times 0.5''$

$= 81^{\#}$

unistrut P3000 $1.70^{\#}/FT$

$l_{P3000} = 160'' \times 2 + 30'' \times 16 = 800'' = 67\ FT$

$W_{P3000} = 114^{\#}$

unistrut P1001 $3.80^{\#}/FT$

$l_{P1001} = 179.25'' \times 27 + (14'' + 12'') \times 4$
$= 4{,}943.75'' = 412\ FT$

$W_{P1001} = 1{,}566^{\#}$

Adjustable lifting lug (2) Per drawing MC-386626

$W_{lug} = 0.2833^{\#} in^{-3} \times (8.75'' \times 8'' \times 0.5'') + (2.5'' \times 4.5'' \times 1.5'')$
$\times 2$
$= 30^{\#}$

support plate (25) Per drawing MB-386718

$W_{splt} = 0.2833^{\#} in^{-3} \times 3'' \times 9'' \times 0.5'' \times 25$
$= 96^{\#}$

FERMILAB ENGINEERING NOTE	SECTION B/C layer Pixel	PROJECT D0 upgrade	SERIAL-CATEGORY	PAGE 1-3
SUBJECT Weight Cal.		NAME E. CHI		
		DATE 6-24-00	REVISION DATE	

Diagonal "C" support: Per MC-386619

$W_{plate_C} = 0.2833\#\,in^{-3} \times (12'' \times 6'' \times 0.5'') + (9'' \times 7'' \times 0.5'')$

$= 19\#$

$W_{tube_C} = 11.97\#/Ft \times 197.67''/12\ Ft$

$= 198\#$

$W_{P3000_C} = 195'' \times 2 = 390'' = 32.5\ Ft$ @ $1.70\#/Ft$

$= 56\#$

$W_{supt.\,C} = 19\# + 198\# + 56\#$

$= 273\#$

Holding BKT, swiving leveling device: (50)

$W_H = 1.5\# \times 50$

$= 75\#$

Diagonal "B" support: Per MC-386618

$W_{plt_B} = 19\#$

$W_{tube_B} = 11.97\#/Ft \times 218.87''/12\ Ft$

$= 218\#$

FERMILAB ENGINEERING NOTE	SECTION B/C layer Pixel	PROJECT D0upgrade	SERIAL-CATEGORY	PAGE 1.4
SUBJECT weight cal.		NAME E. CHI		
		DATE 6-24-00	REVISION DATE	

$W_{P3000_b} = 196'' \times 2 = 392'' = 32.67\ FT\ @\ 1.70\#/FT$

$= 56\#$

$W_{supt\,B} = 19\# + 218\# + 56\#$

$= 293\#$

The total weight of the Frame Net:

$W_{Frame_N} = W_{tub1} + W_{tub2} + W_{tub3} + W_{Bp1} + W_{Bp2}$

$+ W_{P3000} + W_{P1001}$

$= 1{,}032\# + 87\# + 157\# + 13.5\# + 81\# + 114\# + 1{,}566\#$

$= 3{,}051\#$

the total wt. of the frame w/ support & other Accessories:

$W_{Frame\text{-}C} = 3{,}051\# + W_{lug} + W_{splt} + W_{supt.c} + W_{Acc.}$

$= 3{,}051\# + 30\# + 96\# + 273\# + 40\#$

$= 3{,}490\#$

where $W_{Acces} = 40\#$, the Total wt. of bolts, Nuts and other Accessories.

FERMILAB ENGINEERING NOTE	SECTION B/C layer Pixel	PROJECT D0 upgrade	SERIAL-CATEGORY	PAGE 2.1
SUBJECT Find the CTR. gravity of the combinations of Frame & Pixel Frame in z direction		NAME E. CHI		
		DATE 5/30/00	REVISION DATE 6-24-00	

Ref: weight cal. on Page 1.2 & 1.3

Fig 2-1 on page 2-2

"the weight, moment arm & moment cal. for the C-layer Pixel octant" on Page 2-3.

Per Page 2-2.

where $P_1 = 1,566^{\#}$

$P_2 = 1,924^{\#}$

$P_3 = 851^{\#} \cong 860^{\#}$

$P_4 = 1270^{\#} \cong 1300^{\#}$

Find $\bar{z}$ based on 0.0 as indicating on Fig 2-1 of Page 2.2

$$\bar{z} = \frac{P_1 \cdot (-1.625'') + P_2 \cdot (3.50'') + P_3 \cdot (8.25'') + P_4 \cdot (11.7309'')}{P_1 + P_2 + P_3 + P_4}$$

$$= \frac{26,534.42^{\#} \cdot in}{5,650^{\#}}$$

$$= 4.6964''$$

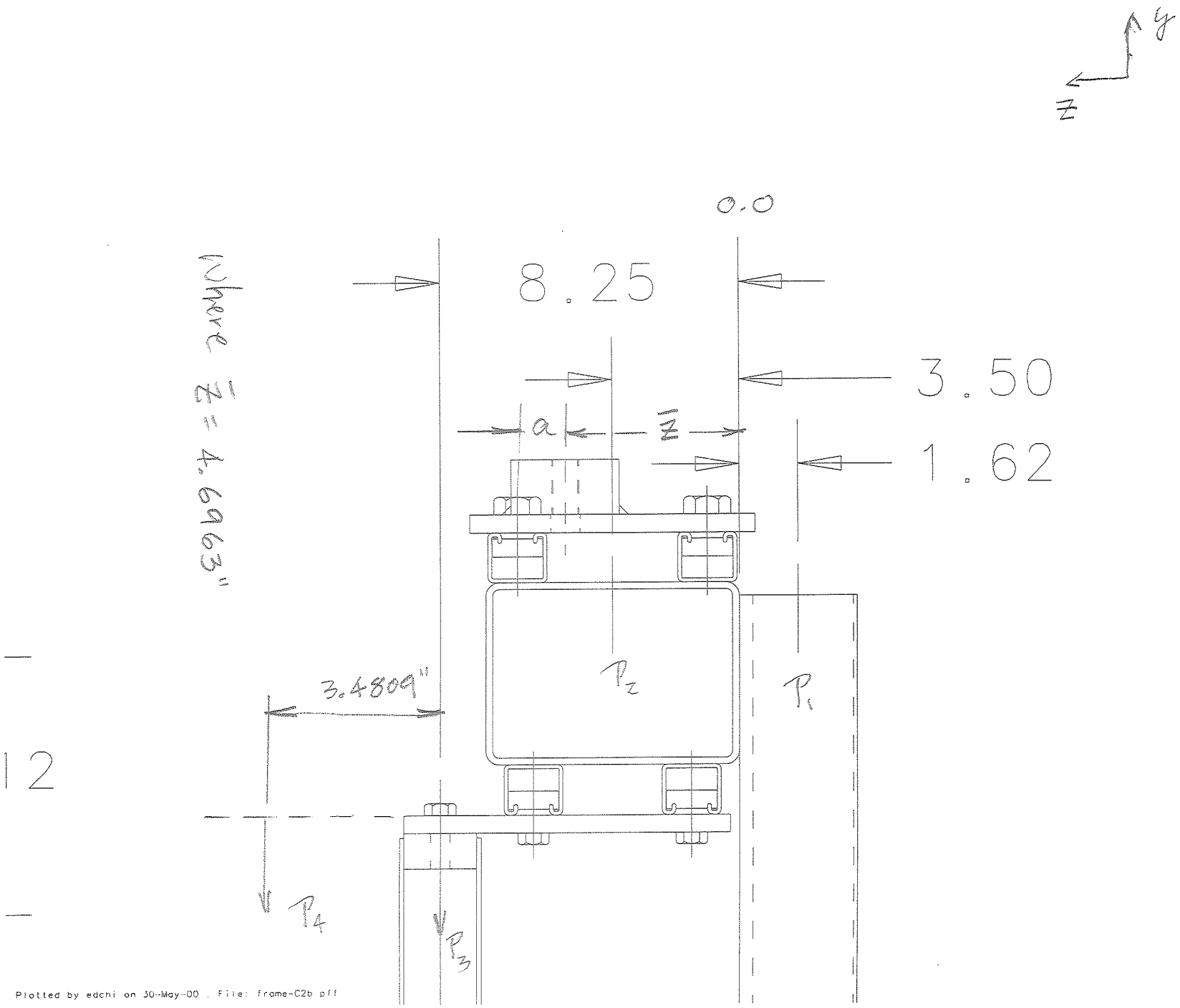
y
z
0.0
8.25
3.50
1.62
a
z
Where z = 4.6963"
3.4809"
P2
P1
P4
P3
12
Plotted by edchi on 30-May-00 . File: frame-C2b.pff

Fig 2.1

The weight, moment arm and moment calculations for the C-layer pixel octant

Type I octant

pixel row number	number of pixels	pmt arm (inches)	pixel arm (inches)	pmt weight (lbs)	weight/pixel (lbs)	Wt1/pixel (lbs)	% of weight of each row	Wmis/pixel (lbs)	ave. arm (inches)	Mx/pixel (in-lb)	Wf/pixel (lbs)	Wt/pixel (lbs)	Wt/row (lbs)	Mx/row (in-lb)
1	7	4.3325	2.0826	2.5	3.21	5.7100	0.040655	1.6668	2.8451	20.988	4.942	-12.3193	-86.2350	146.914
2	9	4.2203	2.0752	2.5	3.93	6.4300	0.058861	1.8770	2.7208	22.601	5.566	-13.8727	-124.8541	203.413
3	10	4.121	2.0689	2.5	4.88	7.3800	0.075064	2.1543	2.6070	24.856	6.388	-15.9223	-159.2229	248.558
4	10	4.0332	2.0638	2.5	6.11	8.6100	0.087575	2.5134	2.5064	27.880	7.453	-18.5760	-185.7601	278.800
5	10	3.9563	2.06	2.5	7.76	10.2600	0.104357	2.9951	2.4177	32.046	8.881	-22.1359	-221.3587	320.462
6	10	3.8891	2.0573	2.5	10	12.5000	0.127141	3.6489	2.3409	37.803	10.820	-26.9687	-269.6865	378.027
7	10	3.8301	2.0553	2.5	13.13	15.6300	0.158977	4.5626	2.2750	45.939	13.529	-33.7216	-337.2160	459.389
8	10	3.7738	2.0518	2.5	17.64	20.1400	0.204850	5.8792	2.2173	57.691	17.433	-43.4519	-434.5189	576.912
9	5	3.7504	2.0199	2.5	11.54	14.0400	0.071402	4.0985	2.2584	40.964	12.153	-30.2912	-151.4560	204.821
10	3	3.7115	2.0171	2.5	13.61	16.1100	0.049158	4.7028	2.2206	46.217	13.944	-34.7572	-104.2716	138.652
11	1	1.9635	1.2404	2.5	19.09	21.5900	0.021960	6.3025	1.3052	36.406	18.688	-46.5803	-46.5803	36.406
							1.0000							
pixels/octant	85		Total pixel weight per octant:			983.16		Total weight per octant (including pixels, frame and accessories):					-2121	
												Total moment per octant:		2992

Where:
- pmt wt., wt. per pixel: per A. Stefanik's "C-layer fishscale sizes" dated on 8/13/98
- pmt arm, pixel arm: per A. stefanik's "C-layer pixel assembly" dated on 8/25/98.
- % of wt. of each row: ((wt1/pixel) x number of pixel of each row)/tot. pixel wt. per octant
- Wmis/pixel: (% of wt. Of each row x Wmis)/# of pixels of each row
- ave. arm: (pixel arm x (wt/pixel + Wmis/pixel)+ (pmt. Arm x pmt wt))/(wt/pixel + Wmis/pixel + pmt wt)
- Mx/pixel: ave. arm x (pmt wt. + wt/pixel + Wmis/pixel)
- Wf/pixel: (% of wt of each row x wt of the frame per octant)/# of pixels of each row
- Wt/pixel: Wt1/pixel + Wmis/pixel + Wf/pixel
- Wt/row: Wt/pixel x # of pixel of each row
- Mx/row: Mx/pixel x # of pixels of each row

Assumptions: mtg bracket weight Wm=137 lbs/octant, cable weight Wc=150 lbs/octant, assuming moment arm as the same as pixel arm.
the weight distribution as proportional ratio as the each row of pixel. Wmis=Wm + Wc =287 lbs,
Wt1=pmt weight + weight/pixel, Wf=weight of the support frame per octant=851 lbs (per Ed Chi's wt. Cal. Dated on 03/15/99)
Wt=total weight of the A-layer pixel octant=Wt1+Wmic.+Wf=2,121 lbs (revised on 09/28/99).

2.3

FERMILAB ENGINEERING NOTE	SECTION B/C layer Pixel	PROJECT D0 upgrade	SERIAL-CATEGORY	PAGE 2.4
SUBJECT CTR. gravity location of the combination of the lifting Fixture & Pixel Frame in X & Y Dir.	NAME E. CHI			
	DATE 5/30/00	REVISION DATE 6/28/00		

For Full longest size C-layer Pixel Frame per drawing: ME-372902 & ME-373072

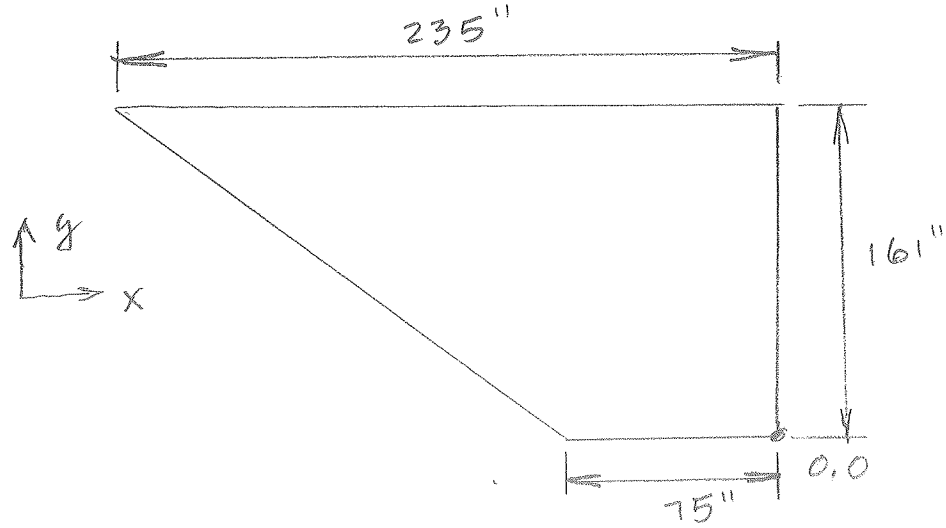

Assuming mass weight distribution proportional to the Area of the Frame.

It Found that the mass CTR:

$\bar{X}_{1a} = 84.38''$

$\bar{y}_{1a} = 94.35''$

$\bar{X}_{1b} = 84.38'' + 6.875'' = 91.255''$

$\bar{y}_{1b} = 94.35'' + 9.375 = 103.725''$

FERMILAB ENGINEERING NOTE	SECTION	PROJECT D0upgrade	SERIAL-CATEGORY	PAGE 2.5
SUBJECT the location of the mass CTR. in X & Y direction		NAME E. CHI		
		DATE 5/31/00	REVISION DATE 6/24/00	

Per lifting fixture drawing:

Assuming the mass CTR. of the lifting fixture is at its geometric CTR:

$$\bar{X}_2 = 249.50''/2 = 124.75''$$

$$\bar{Y}_2 = 179.75''/2 = 89.875$$

The mass CTR. of the combinations:

$$\bar{X} = \frac{91.255'' \times 2{,}160^{\#} + 124.75'' \times 3{,}490^{\#}}{5{,}650^{\#}}$$

$$= 111.945$$

$$\bar{Y} = \frac{103.725'' \times 2{,}160^{\#} + 89.875'' \times 3{,}490^{\#}}{5{,}650^{\#}}$$

$$= 95.170''$$

FERMILAB
ENGINEERING NOTE

SECTION	PROJECT	SERIAL-CATEGORY	PAGE
	D0upgrade		3.1

SUBJECT: Structure Analysis & Calculations — Frame weldment

NAME: E. CHI

DATE: 6-24-00

REVISION DATE:

Ref. dwg: ME-386617

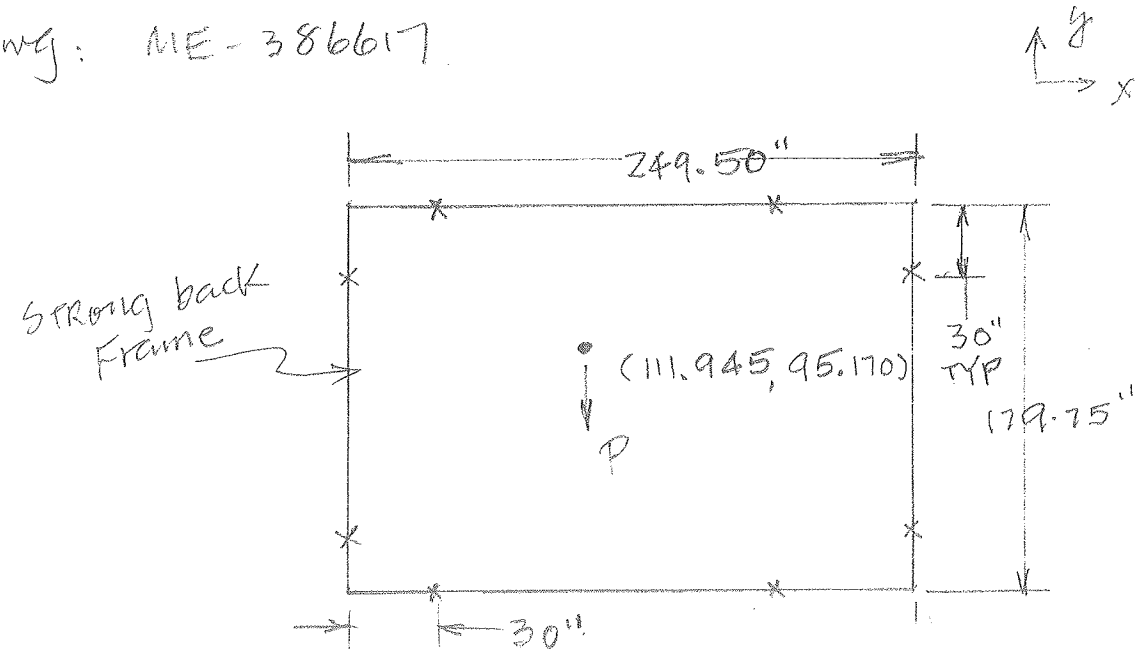

Fig 3.1

Fig 3.1 is the mass ctr. distribution in terms of the combination of strong back frame and the pixel frame (full size d octant frame) in X & Y direction. (see Chapter 2).

To find the shear force applying to the strong back frame member when the combination lifting vertically (Y dir.) & Horizontally (X direction) respectively.

Where Fig 3.2 is the FBD for lifting Horizontally

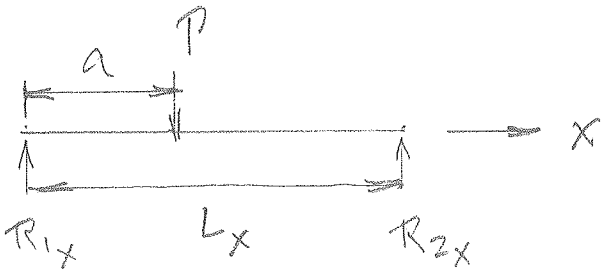

Fig 3.2.

Where

$L_x = 249.50''$

$a = 111.945''$

$P = 5650^{\#}$

then $R_{1x} = \dfrac{P \cdot (L_x - a)}{L_x}$

$= \dfrac{5{,}650^{\#} \times 137.555''}{249.50''}$

$= 3{,}115^{\#}$

$R_{2x} = \dfrac{P \cdot a}{L_x}$

$= 2{,}535^{\#}$

Where Fig 3-3 is the FBD when the combination lifting vertically.

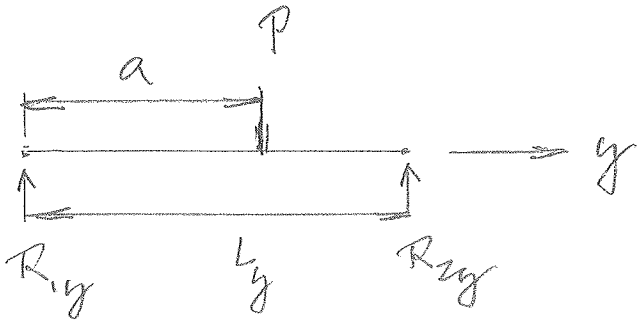

Fig 3-3

Where

$L_y = 179.75''$

$P = 5,650^{\#}$

$a = 95.170''$

then. $R_{1y} = \dfrac{P(L_y - a)}{L_y}$

$= \dfrac{5,650^{\#} \times 84.58''}{179.75''}$

$= 2,659^{\#}$

$R_{2y} = \dfrac{P \cdot a}{L_y}$

$= 2,991^{\#}$

FERMILAB ENGINEERING NOTE | SECTION | PROJECT: Dupgrade | SERIAL-CATEGORY | PAGE: 3.4

SUBJECT: Structural Analysis, strong back frame — moment, stress calculation.

NAME: E. CHI

DATE: 6-24-00 | REVISION DATE

Per drawing ME-386617

where fig 3.4 is the FBD when the combination lifting vertically by 2 positions.

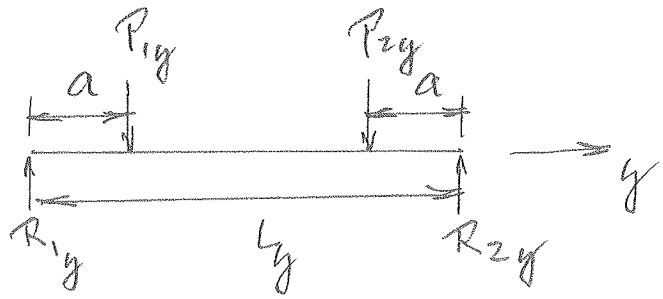

Fig 3.4

Find out the Reaction force applying to that lifting lug:

where $L_y = 174.75''$

$a = 33.50''$

$R_{1y} = 2,659^{\#}$, $R_{2y} = 2,991^{\#}$

Find $$P_{1y} = \frac{R_{1y}(l_y - a) - R_{2y}\,a}{L_y - 2a}$$

$$= 2,556^{\#}$$

$$P_{2y} = \frac{R_{2y}(l_y - a) - R_{1y}\,a}{l_y - 2a}$$

$$= 3,094^{\#}$$

$\because R_{zy} < P_{zy}$ Per case 11, Page 2-299 AISC, 9th Edition.

$\therefore M_{max} = R_{zy} \cdot a$

$= 2{,}991^{\#} \times 33.50''$

$= 100{,}199^{\#}\cdot in$

For simplicity, only consider geometrical property of main tube: 7" x 5" x 3/16". ASTM A500 Gd.B

Where $I_y = 17.7\ in^4$

$S_y = 7.10\ in^3$

$A = 4.27\ in^2$

$f_{b_y} = M_{max}/S_y$

$= 14.113\ KSi < F_b = 46KSi/3.0 = 15.333\ KSi$

Per. Ryerson Stock list.

$F_Y = 46$ KSi for ASTM. A500. Gd. B.

Per Section 20-1.2-2.2, ASME B30.20.

$F_b = F_Y/3.0$

$f_v = R_{zy}/A$

$= 2991^{\#}/4.27\ in^2$

$= 701\ psi < F_v = 15{,}333\ psi$ (see page 3.8 to 3.10 for Allowable Stress)

Where Fig 3.5 is the FBD when the combinat lifting horizontally by two positions (x dir.)

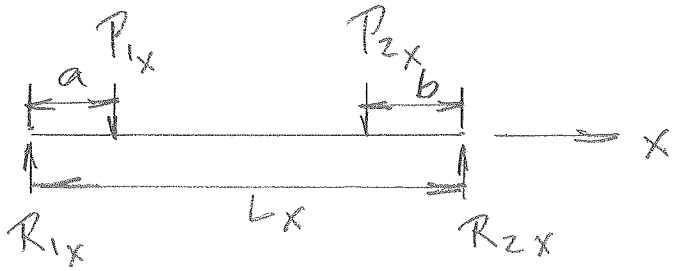

Fig 3.5

Find out the applying force to the 2 lifting lugs:

where $L_x = 244.50''$

$a = 30''$

$b = 43''$

$R_{1x} = 3115\#$, $R_{2x} = 2{,}535\#$

$$P_{2x} = \frac{R_{2x}(l_x - a) - R_{1x}a}{l_x - a - b}$$

$l_x - a = 214.50''$

$l_x - a - b = 171.50''$

$l_x - b = 201.50''$

$= 2{,}626\#$

$$P_{1x} = \frac{-R_{2x}b + R_1(l-b)}{l_x - a - b}$$

$= 3{,}024\#$

$\because R_{2x} = 2,535^{\#} < P_{2x} = 2,626^{\#}$

per case 11
Page 2-299. AISC
9th edition.

$\therefore M_{max} = R_{2x} \cdot b$

$= 2,535^{\#} \times 43''$

$= 109,005^{\#}$ in

$f_{by} = M_{max}/S_y$

$= 109,005^{\#}$ in$/7.10$ in^3

$= 15.353$ KSI $\approx F_b = 15.333$ KSI. OK

if consider the additional structural Reinforcement by corner bracers, unistruts, the f_{by} value will far below F_b value.

$f_v = R_{1x}/A$

$= 3115^{\#}/4.27$ in^2

$= 730$ PSI $< F_v = 15333$ PSI

(see page 3.8 TO 3.10 for Allowable stress cal.)

SUBJECT: Structural Analysis – Strong Back, Frame weldment, Allowable Stress F_v, F_b

NAME: E. Chi

DATE: 6-26-00

REVISION DATE:

For Rectangular Tube $7'' \times 5'' \times \frac{3}{16}''$ under loading case described on page 3.4 to page 3.6.

Per §B5.1d, Page 5-35 of AISC, 9th Ed.

$b = 7'' - 3 \times \frac{3}{16}'' = 6.4375''$

$d = 5''$

$t_f = 0.1875'' = t_w$

$F_y = 46$ ksi Per Ryerson stocklist. ASTM A500 Gd B.

Per table B5.1 of SECTION B5, AISC 9th Edition.

$190/(F_y)^{1/2} = 28$, $238/(F_y)^{1/2} = 35.09$

$b/t = 6.4375''/0.1875''$

$= 34.33$

$\therefore 190/(F_y)^{1/2} < \frac{b}{t} < 238/(F_y)^{1/2}$

Per SECTION F3.2 of AISC, 9th Ed. Also,

$d = 5'' < 6 \times b = 35''$

$\therefore F_{b_1} = 0.60 F_y = 27.6$ ksi

SUBJECT: Structural Analysis - Strong back Frame weldment, Allowable Stress F_v, F_b.

NAME: E. CHI

DATE: 6-26-00

REVISION DATE:

Per SECTION 20-1.2.2.2, ASME B30.20

$$F_{b_2} = F_y/3.0$$
$$= 46\ \text{KSI}/3.0$$
$$= 15.333\ \text{KSI}$$

$\because$ $F_{b2} < F_{b1}$,

pick the lesser one.

$\therefore$ $F_b = F_{b2} = 15.333$ KSI

Per SECTION F4 of AISC 9th Edition:

$$h = 5'' - 2 \times \tfrac{3}{16}''$$
$$= 4.625''$$

$$h/t_w = 4.625''/0.1875''$$
$$= 24.67$$

$$380/(F_y)^{1/2} = 56.03$$

$\therefore$ $h/t_w = 24.67 < 380/(F_y)^{1/2} = 56.03$

Per eq. F4-1, SECTION F4 of AISC

$$F_{v_1} = 0.40\ F_y$$
$$= 18.4\ \text{KSI}$$

PER SECTION 20-1.2.2.2, ASME B30.20

$$F_{v_2} = F_y / 3.0$$

$$= 15.333 \text{ KSI}$$

$$\therefore \; F_{v_2} = 15.333 \text{ KSI} < F_{v_1} = 18.4 \text{ KSI}$$

$$\therefore \; F_v = F_{v_2} = 15.333 \text{ KSI}$$

SUBJECT: Structural Analysis. — Strong back Frame Adjustable lifting lug

NAME: E. CHI

DATE: 6-28-00

REVISION DATE:

Ref. drawing: MC-386626
ME-386717

Also Ref. to Fig 2-1 on page 2-1

Fig 3.6 is the FBD for the Adjustable lifting lug lifted @ the most conservative Position:

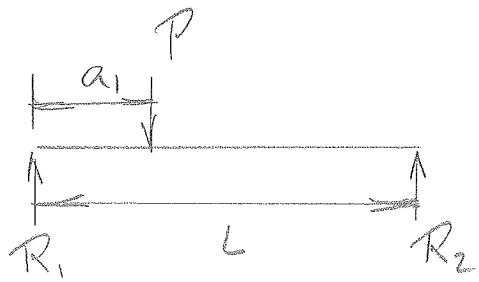

Fig 3.6

where $l = 5.25$

$a_1 = 0.75$

$P_{max.} = 3,094^{\#}$ (see page 3.4)

$$R_1 = \frac{P \cdot (L-a)}{l}$$

$$= 2,652^{\#}$$

$$R_2 = \frac{P \cdot a}{l}$$

$$= 442^{\#}$$

if $a_2 = 1.25$

$L - a_2 = 4.00$

$$M_{max} = \frac{P a_2 (L - a_2)}{\ell}$$

$$= 2,947 \ \#\ in$$

The mounting plate, for simplicity and conservative approach, only conside $t = \frac{1}{2}''$

then

$$I = \frac{(8'' - 2 \times 0.8125'') \times 0.5^3}{12}$$

$$= 0.0664 \ in^4$$

$$S = 0.2656 \ in^3$$

$$f_b = M_{max}/S$$

$$= 11.095 \ KSI < F_b = 12 \ KSI$$ for ASTM A36 $F_Y = 36$ KSI

$$f_v = 2,652\#/6.375'' \times 0.5''$$

$$= 0.832 \ KSI < F_v = 12 \ KSI$$

SUBJECT: Structural Analysis - Strong back Frame support plate.

NAME: E. CHI

DATE: 6-29-00

REVISION DATE:

Ref. dwg: ME-386717
MB-386718

Also. per Fig 2-1 of Page 2-2

Fig 3-7 is the FBD of the support plate MB 386718 under the Applying loads P_2 & P_1

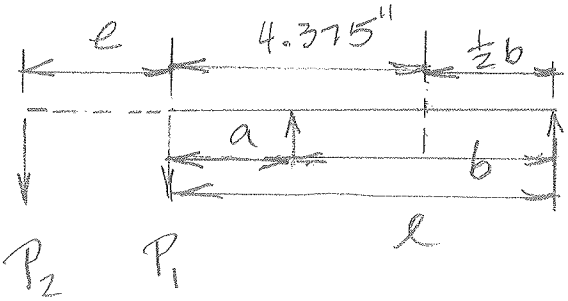

Fig 3-7

where $b = 4.375''$ $\quad e = 3.4809''$

$a = 2.5625''$

$P_1 = 860^{\#}/20 = 43^{\#}$

$P_2 = 1300^{\#}/20 = 65^{\#}$

For plate: $b = 3.0''$, $t = \frac{1}{2}''$

material A36 $\quad F_y = 36$ KSI

$F_b = F_v = 12$ KSI

$$I_x = \frac{3'' \times 0.5^3 \text{ in}^3}{12}$$

$$= 0.03125 \text{ in}^4$$

$$S_x = 0.125 \text{ in}^3$$

$$M_{max} = 4.375'' \times 43^{\#} + (4.375'' + 3.4809'') \times 65^{\#}$$

$$= 188.125^{\#} \text{in} + 510.634^{\#} \text{in}$$

$$\cong 700^{\#} \text{in}$$

$$f_b = M_{max}/S_x$$

$$= 5.6 \text{ KSi} < F_b = 12 \text{ KSi}$$

$$f_v = (43^{\#} + 65^{\#}) / (3'' - 0.5625'') \times \tfrac{1}{2}''$$

$$= 108^{\#} / 1.21875 \text{ in}^2$$

$$= 0.089 \text{ KSi} < F_v = 12 \text{ KSi}$$

OK

FERMILAB ENGINEERING NOTE	SECTION C-layer Transport	PROJECT Upgrade	SERIAL-CATEGORY	PAGE 4.1
SUBJECT Weldment – the welds @ main frame tubing. 5" × 7" × 3/16"		NAME E. CHI	DATE 6-28-00	REVISION DATE

Ref. drawing ME-386617

Per page 3.2 & 3.3.

the max. SHEAR force applying to the STRONG back frame tube member is: $P_v = 3,115\#$

the Allowable stresses in welds:

Per SECTION 20-1.2.2.a, ASME B30.2

& table 8.1, Part B of AWS D1.1

$F_{vw_1} = 0.30 \times F_t = 70\ KSI$ for E70XX.

$= 21\ KSI$

$\because F_v = 15.333\ KSi$ for the Base metal (tubing)

$F_{vw_1} > F_v$

$\therefore F_{vw} = F_v = 15.333\ KSi$

the Allowable welding force: (see view M of ME-386617)

$P_{v_{Allowable}} = 0.1875\ in \times 0.707 \times 7" \times 2 \times 15.333\ KSi$

$= 28,456\# > P_v = 3,115\#$

$\therefore$ the welds for main tubing are ok.

FERMILAB ENGINEERING NOTE	SECTION	PROJECT	SERIAL-CATEGORY	PAGE
		DØ upgrade		4.2

SUBJECT	NAME	
Weldment _ the welds @ unistrut for lifting lug.	E. CHI	
	DATE 6-28-00	REVISION DATE

the welds @ unistrut P3000 for the lifting lug device.

Per SECTION F-F of ME-386617 &
Per table 2.1 of §2-3, AWS D1.1-90
the effective weld size $\frac{3}{8}R$ for GMAW.

where R is the Radius of the outside surface of P3000 *

* inside Radius $R_i = 0.03125''$

$R = R_o = R_i + 0.105''$ (t)

$= 0.136$ in

$\therefore C_{eff} = \frac{3}{8}R = 0.051''$

the Allowable stresses in welds of unistrut P3000

unistrut material spec. A 570 Gd. 33

Where $F_Y = 33$ KSI

Per page 4.1. $F_V = F_Y / 3.0 = 11$ KSI

Per SECTION F-F of dwg. ME-386617
& Page 3.11. $P_V = 2,652$ #

FERMILAB ENGINEERING NOTE | SECTION | PROJECT Dupgrade | SERIAL-CATEGORY | PAGE 4.3
SUBJECT Weldment | NAME E. CHI | DATE 6-29-00 | REVISION DATE

$P_{v_{Allowable}} = 0.051'' \times 8'' \times 2 \times 11{,}000\ psi$ *

$= 8{,}976^{\#} > P_v = 2{,}652^{\#}$

* where $l_{actual} = 30$ in only selecting $l_{eff} = 8$ in as effective length.

$\because$ $l_{eff} = 8$ in is the width of the lifting lug.

The size of welds is ok.

<u>The welds @ lifting lug plate:</u>

Ref. dwg. MC-386626

material: A36 $F_y = 36$ ksi

$F_b = F_v = 12$ ksi

Per page 3.4. $P_v = 3{,}094^{\#}$

$P_{v_{Allowable}} = 0.375'' \times 0.707 \times 2.50\ in \times 2 \times 12\ ksi$

$= 15{,}907^{\#} > P_v = 3{,}094^{\#}$

$\therefore$ the welds are ok.

FERMILAB ENGINEERING NOTE	SECTION	PROJECT	SERIAL-CATEGORY	PAGE
		Pdupgrade		5.1

SUBJECT	NAME	
Deflection calculations FOR Cross-over unistrut P1001.	E. CHI	
	DATE 6-29-00	REVISION DATE

Ref. ME-386717
ME-386617

Given: unistrut P1001

$3.80^{\#}/FT$

$I_x = 0.930\ in^4$

$E = 30 \times 10^6 psi$

external Applying loads: (the most case)

$25^{\#} \times 3$ (one @ middle, the other two is about 40" away from each end.

1. Find the deflection due to the wt. of the unistrut:

Where

$w = 3.80^{\#}/12\ in$

$= 0.3167^{\#}/in$

$l = 169.75''$

$$\delta_{max_1} = \frac{5wl^4}{384EI}$$

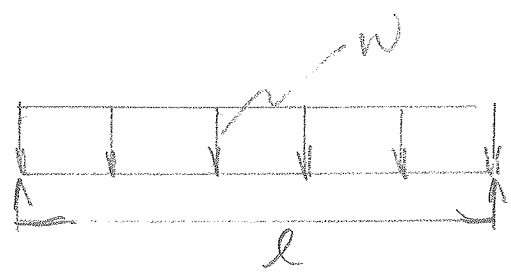

Fig 5.1

$$= \frac{5 \times 0.3167^{\#}\,in^{-1} \times 169.75^{4}\,\cancel{in^{4}}}{384 \times 30 \times 10^{6}\,\#\,in^{-2} \times 0.93\,\cancel{in^{4}}}$$

$$= 0.1227 \text{ in}$$

2. the deflection due to the concentrated load @ CTR.

$$\delta_{max_2} = \frac{Pl^2}{48EI}$$

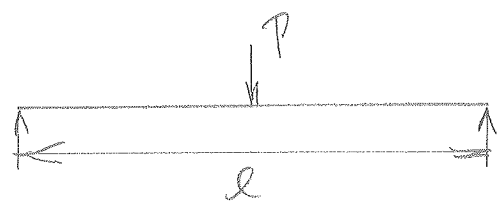

Fig 5.2

Where

$P = 25^{\#}$

$l = 169.75$ in

$$\delta_{max_2} = \frac{25^{\#} \times 169.75^{3}\,in^{3}}{48 \times 30 \times 10^{6}\,\#\,in^{-2} \times 0.93\,in^{4}}$$

$$= 0.0881 \text{ in}$$

3. the deflection due to two equal concentrated loads symmetrically placed:

Fig 5.3

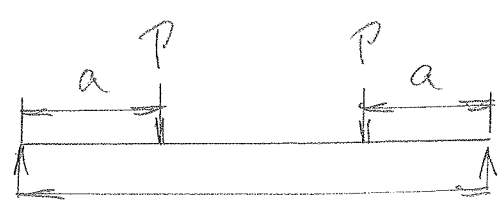

Where: $P = 25^{\#}$

$a = 40$ in

$l = 169.75$ in

SUBJECT: Deflections

NAME: E. CHI

DATE: 6/29/00 | REVISION DATE:

$$\delta_{max3} = \frac{Pa}{24EI}(3l^2 - 4a^2)$$

$$= \frac{25^{\#} \times 40\ in}{24 \times 30 \times 10^6\ \#\ in^{-2} \times 0.93\ in^4} \times (3 \times 169.75^2 - 4 \times 40^2)\ in^2$$

$$= 0.1195\ in$$

total deflection δ_{total}:

$$\delta_{total} = \delta_{max1} + \delta_{max2} + \delta_{max3}$$

$$= 0.1227\ in + 0.0881\ in + 0.1195\ in$$

$$= 0.3303\ in.$$

FERMILAB
ENGINEERING NOTE

SECTION	PROJECT	SERIAL-CATEGORY	PAGE
C-layer Pixel Frame	Dupgrade		6-1

SUBJECT	NAME	
Load Test Procedures — B/C Strong back Transport/Lifting Fixture Frame	E. CHI	
	DATE 7-12-00	REVISION DATE

Ref. drawings: ME-386717, MC-386626

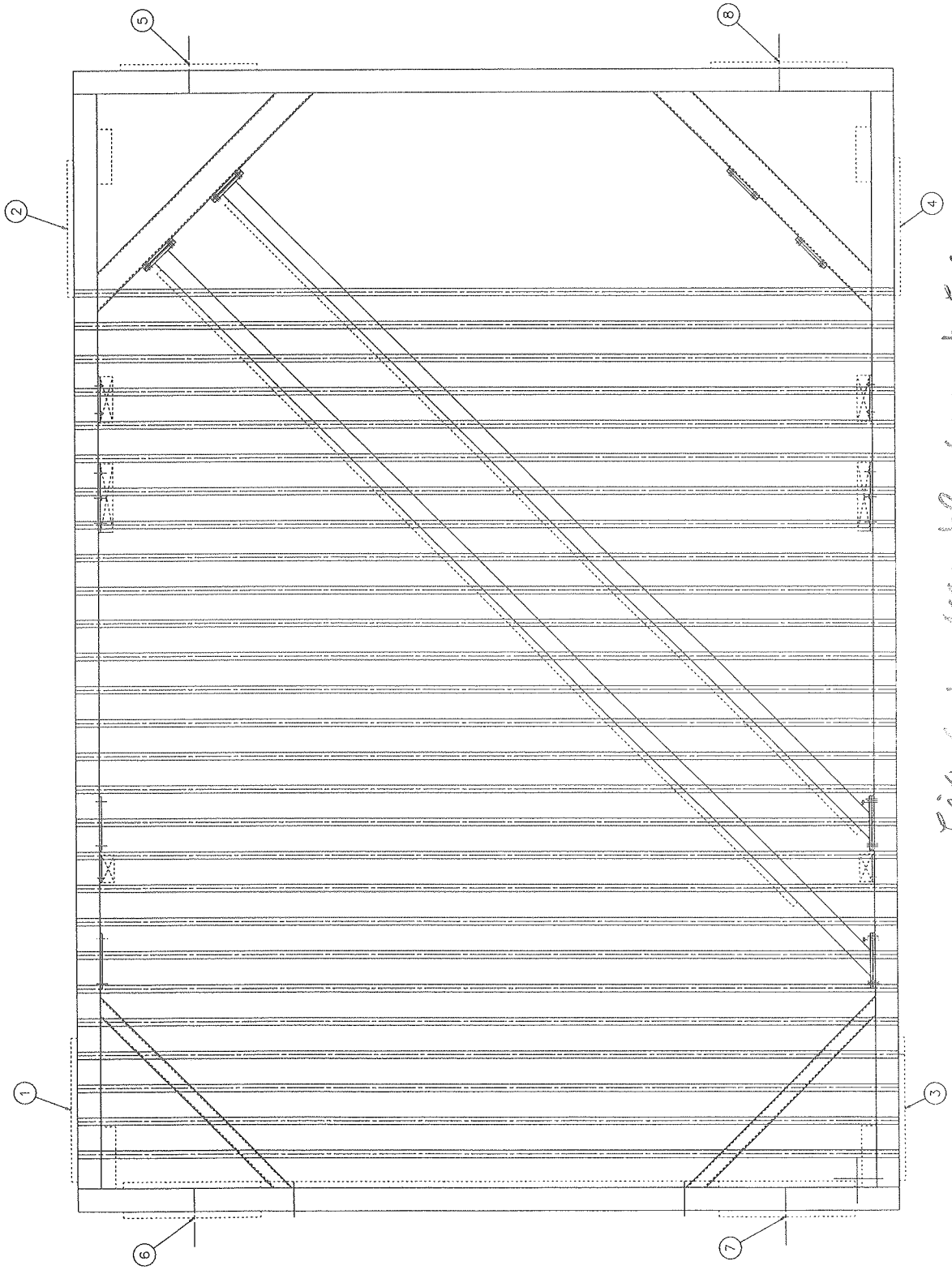

Fig 6.1. Assembly Layout For B/C Strong back Lifting Frame.

Plotted by cdchi on 11-Jul-00 File frame-C2bc.pdf

FERMILAB ENGINEERING NOTE	SECTION 2-layer Pixel Frame	PROJECT D0 upgrade	SERIAL-CATEGORY	PAGE 6.2
SUBJECT Load Test Procedures – B/C Transport and lifting Fixture Frame		NAME E. CHI	DATE 7-12-00	REVISION DATE

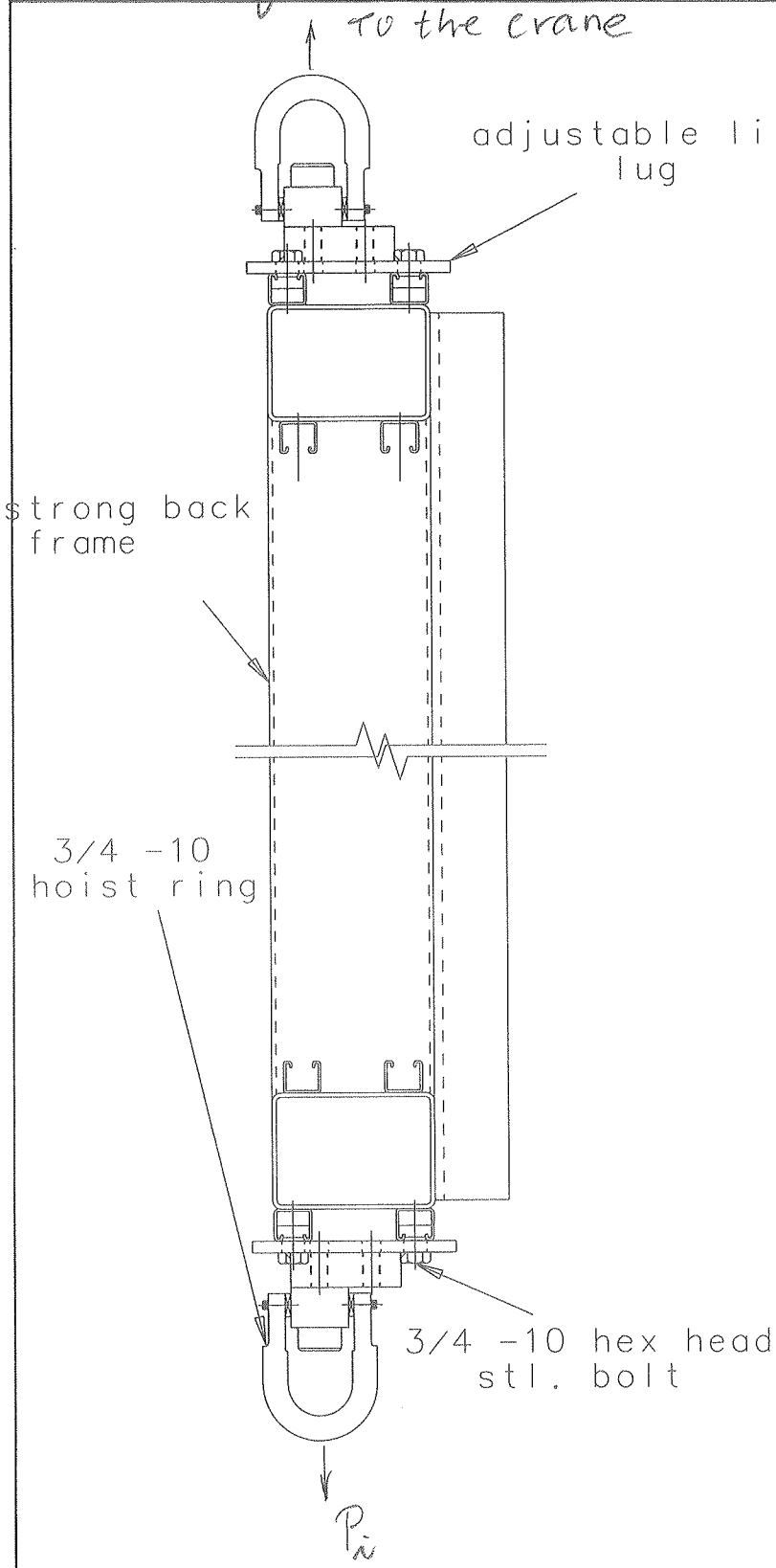

Step #1:

Install adjustable lifting lug plates (4) to the locations #1, #2, #3 and #4 as showing in Fig 6.1 of Page 6.1 and Fig 6.2 of Page 6.2.

The tighting Torque for the 3/4"-10 Hex head stl. bolt is about:

T = 125 Ft-lbs

(tighting uniformly)

Fig. 6.2. SECTION view of strong-back lifting Frame.

SUBJECT: Load Test Procedures – B/C Transport and lifting Fixture Frame

NAME: E. CHI

DATE: 7-12-00 | REVISION DATE:

Step 2:

Install Four $\frac{3}{4}$-10 Hoist Ring with work load limit 7,000 lbs for each Hoist Ring to the Adjustable lifting lug plate @ the locations of #1, #2, #3 & #4 Respectively as showing in Fig 6.1 & Fig 6.2. Tighting mounting screw per stamped Torque value.

Step 3:

Lifting the Frame @ locations #1 & #2 with lifting crane, applying load P_i @ locations #3 & #4 as showing in Fig 6.2 of Page 6.2

Where $P_i = 1,375$ # @ each location of the same time

that is: $P_i = P_3 = P_4 = 1,375$ #

Duration of loading: ~ 5 minutes.

Step 4:

Lifting the Fixture Frame @ locations #3 & #4 with crane, applying load P @ locations #1 & #2 @ the same time.

Where $P_i = 1,375^{\#}$ @ each location

i.e.: $P_i = P_1 = P_2 = 1,375^{\#}$

Duration of loading: ~ 5 minutes

Step 5:

Install adjustable lifting lug plates to the locations #5, #6, #7 & #8 as showing in Fig 6.1 of Page 6.1. Repeat the similar steps As step 1 to step 4 for locations #6 & #7, #5 & #8 load test respectively.

Where $P_i = P_6 = P_7 = P_5 = P_8 = 1,375^{\#}$

Duration of loading: ~ 5 minutes.

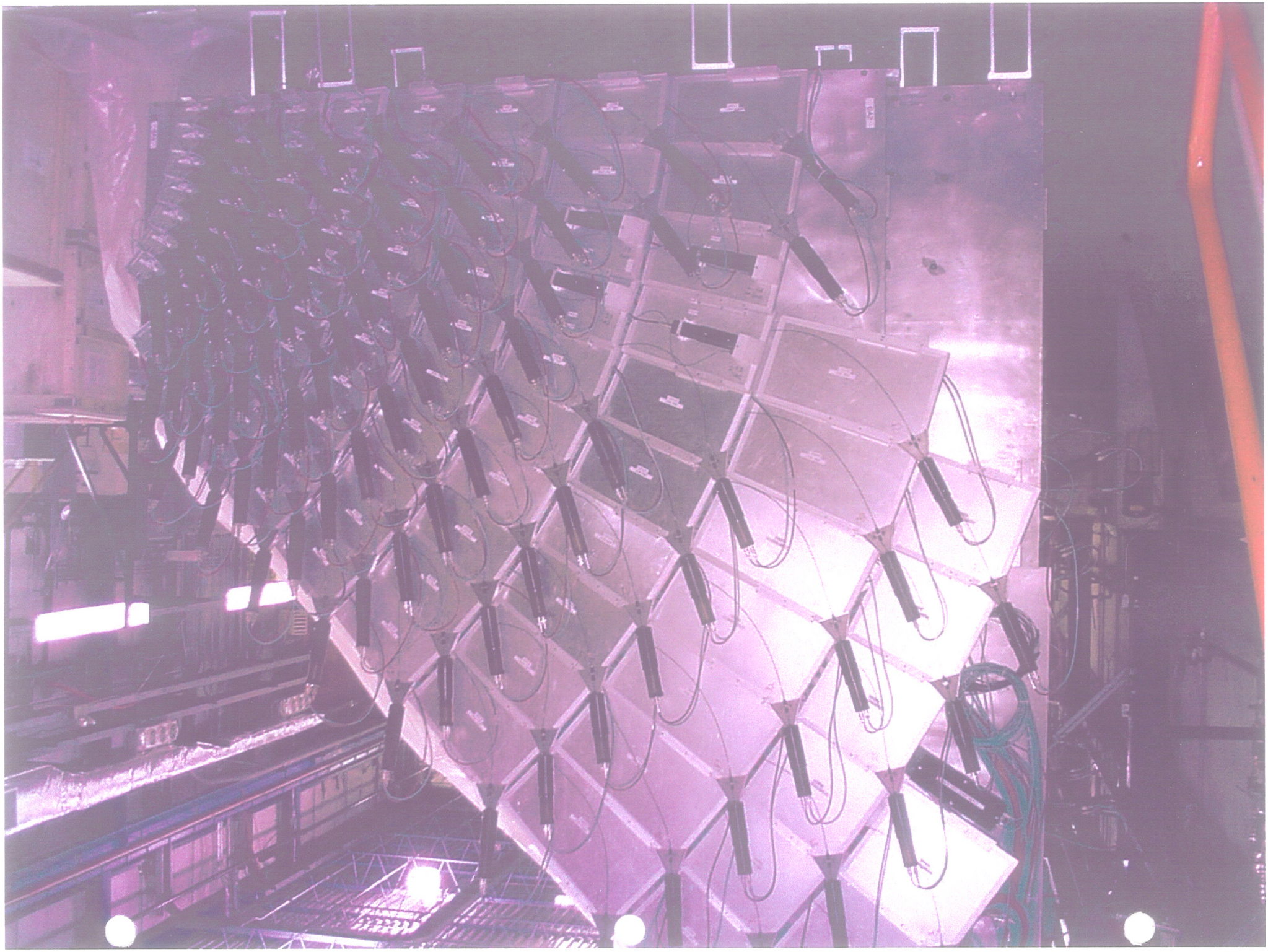

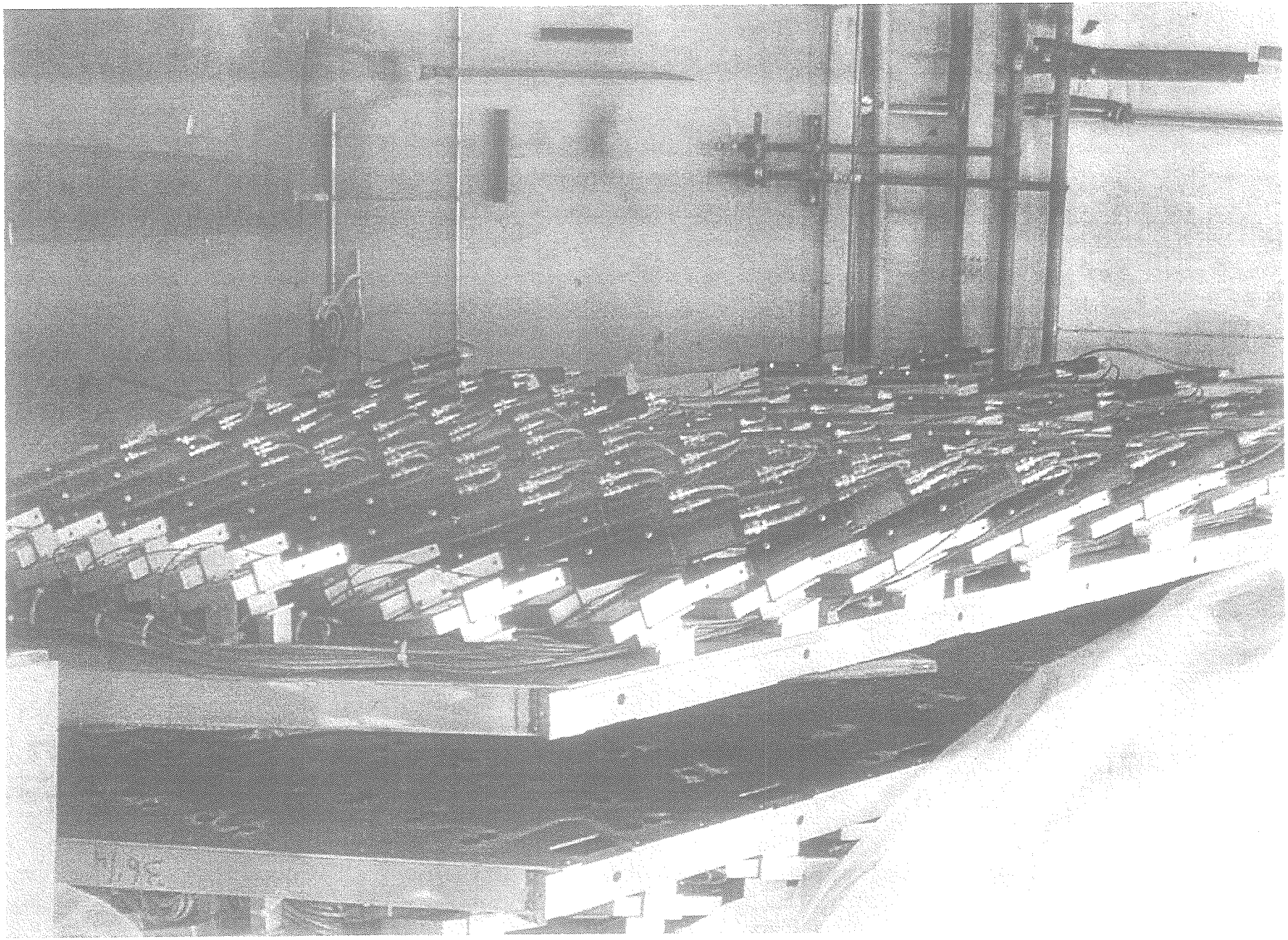

A2

A3

CHANNEL NUT LOAD DATA

FOR 1-5/8" (41 MM) WIDTH SERIES CHANNEL

UNISTRUT

MAXIMUM ALLOWABLE PULL-OUT AND SLIP LOADS

Channel Nut Size/Thread	Gage	Channel	Allowable Pull-Out Strength		Resistance to Slip		Torque	
			Lbs	kN	Lbs	kN	Ft Lbs	N•m
3/4" - 10	12	P1000 P3000 P5000 P5500	2500	11.1	1700	7.6	125*	170
5/8" - 11			2500	11.1	1500	6.7	100*	135
1/2" - 13			2000	8.9	1500	6.7	50	70
7/16"- 14			1400	6.2	1000	4.4	35	50
3/8" - 16			1000	4.4	800	3.6	19	25
5/16"- 18			800	3.6	500	2.2	11	15
1/4" - 20			600	2.7	300	1.3	6	8
1/2" - 13	12	P3300	1500	6.7	1500	6.7	50	70
3/8" - 16			1000	4.4	800	3.6	19	25
5/16"- 18			800	3.6	500	2.2	11	15
1/4" - 20			600	2.7	300	1.3	6	8
1/2" - 13	14	P1100 & P4100	1400	6.2	1000	4.4	50	70
3/8" - 16			1000	4.4	750	3.3	19	25
5/16"- 18			800	3.6	400	1.8	11	15
1/4" - 20			600	2.7	300	1.3	6	8
1/2" - 13	16	P2000 & P4000	1000	4.4	1000	4.4	50	70
3/8" - 16			1000	4.4	750	3.3	19	25
5/16"- 18			800	3.6	400	1.8	11	15
1/4" - 20			600	2.7	300	1.3	6	8

* May require 3/8" or 1/2" thick fitting.
Nut design loads include a minimum safety factor of 3.
Note: Refer to the Channel Nut Selection Chart on the following two pages for the part number.

SWIVEL HOIST RINGS

BODY, RING: 4140 STEEL, HEAT TREATED RC 43-48
BOLT: ALLOY STEEL, HEAT TREATED RC 39-43
BLACK OXIDE FINISH OR CADMIUM PLATED

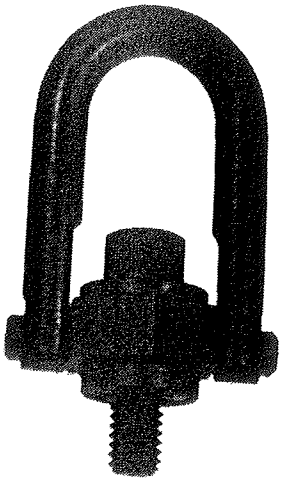

NOW ALSO AVAILABLE CADMIUM PLATED & IN METRIC SIZES!

Pivots 180° and rotates 360° simultaneously to allow lifting from any direction. Choice of bolt lengths available: use the shortest only for steel plates, the other lengths for weaker materials and for through-hole mounting with a washer and nut.

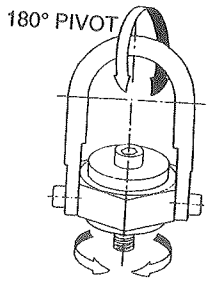

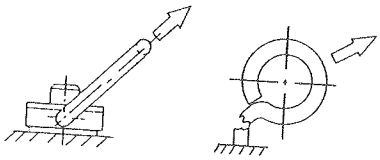

Swivel Hoist Rings (left) are designed to withstand much greater side loads than eye bolts (right).

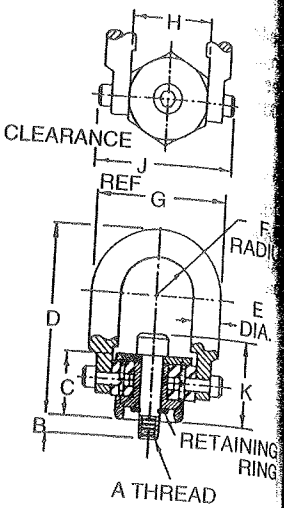

BLACK OXIDE FINISH (USA)

PART NO.	LOAD RATING (LBS)*	A	B	C	D	E	F	G	H	J	K	INSTALLATION TORQUE (FT-LB)	REPLACEMENT BOLT (WITH RETAINING RING)
CL-800-SHR-1	800	5/16-18	.29	.72	2.71	3/8	7/16	1-5/8	1	1.82	1.03	7	CL-800-SHRB-1
CL-800-SHR-2			.54										CL-800-SHRB-2
CL-1000-SHR-1	1000	3/8-16	.54	.72	2.71	3/8	7/16	1-5/8	1	1.82	1.09	12	CL-1000-SHRB-1
CL-2500-SHR-1	2500	1/2-13	.77	1.23	4.77	3/4	7/8	3-1/4	2	3.52	1.73	28	CL-2500-SHRB-1
CL-2500-SHR-2			1.02										CL-2500-SHRB-2
CL-2500-SHR-3			1.27										CL-2500-SHRB-3
CL-4000-SHR-1	4000	5/8-11	.77	1.23	4.77	3/4	7/8	3-1/4	2	3.52	1.86	60	CL-4000-SHRB-1
CL-4000-SHR-2			1.02										CL-4000-SHRB-2
CL-4000-SHR-3			1.27										CL-4000-SHRB-3
CL-5000-SHR-1	5000	3/4-10	1.02	1.23	4.77	3/4	7/8	3-1/4	2	3.52	1.98	100	CL-5000-SHRB-1
CL-5000-SHR-2			1.52										CL-5000-SHRB-2
CL-7000-SHR-1	7000	3/4-10	1.03	1.72	6.55	1-1/16	1-13/32	4-15/16	3	5.06	2.47	100	CL-7000-SHRB-1
CL-7000-SHR-2			1.53										CL-7000-SHRB-2
CL-8000-SHR-1	8000	7/8-9	1.03	1.72	6.55	1-1/16	1-13/32	4-15/16	3	5.06	2.60	160	CL-8000-SHRB-1
CL-8000-SHR-2			1.53										CL-8000-SHRB-2
CL-10000-SHR-1	10000	1-8	1.28	1.72	6.55	1-1/16	1-13/32	4-15/16	3	5.06	2.72	230	CL-10000-SHRB-1
CL-10000-SHR-2			1.53										CL-10000-SHRB-2
CL-10000-SHR-3			2.28										CL-10000-SHRB-3

BLACK OXIDE FINISH (METRIC)

CLM-800-SHR-2	800	M8	.66	.71	2.71	3/8	7/16	1-5/8	1	1.82	1.02	7	CLM-800-SHRB-2
CLM-1000-SHR-1	1000	M10	.74	1.23	4.77	3/4	7/8	3-1/4	2	3.52	1.10	12	CLM-1000-SHRB-1
CLM-2500-SHR-1	2500	M12	1.13								1.70	28	CLM-2500-SHRB-1
CLM-4000-SHR-2	4000	M16									1.86	60	CLM-4000-SHRB-2

CADMIUM PLATED (USA)

CL-800-SHR-1-C	800	5/16-18	.29	.72	2.71	3/8	7/16	1-5/8	1	1.82	1.03	7	CL-800-SHRB-1-C
CL-800-SHR-2-C			.54										CL-800-SHRB-2-C
CL-1000-SHR-1-C	1000	3/8-16	.54	.72	2.71	3/8	7/16	1-5/8	1	1.82	1.09	12	CL-1000-SHRB-1-C
CL-2500-SHR-1-C	2500	1/2-13	.77	1.23	4.77	3/4	7/8	3-1/4	2	3.52	1.73	28	CL-2500-SHRB-1-C
CL-2500-SHR-2-C			1.02										CL-2500-SHRB-2-C
CL-2500-SHR-3-C			1.27										CL-2500-SHRB-3-C
CL-4000-SHR-1-C	4000	5/8-11	.77	1.23	4.77	3/4	7/8	3-1/4	2	3.52	1.86	60	CL-4000-SHRB-1-C
CL-4000-SHR-2-C			1.02										CL-4000-SHRB-2-C
CL-4000-SHR-3-C			1.27										CL-4000-SHRB-3-C
CL-5000-SHR-1-C	5000	3/4-10	1.02	1.23	4.77	3/4	7/8	3-1/4	2	3.52	1.98	100	CL-5000-SHRB-1-C
CL-5000-SHR-2-C			1.52										CL-5000-SHRB-2-C

*Safety factor=5:1

Carr Lane MANUFACTURING CO.
4200 Carr Lane Ct., P.O. Box 191970
St. Louis, Missouri 63119-2196
® Phone: 314-647-6200, FAX: 314-647-5736

A5

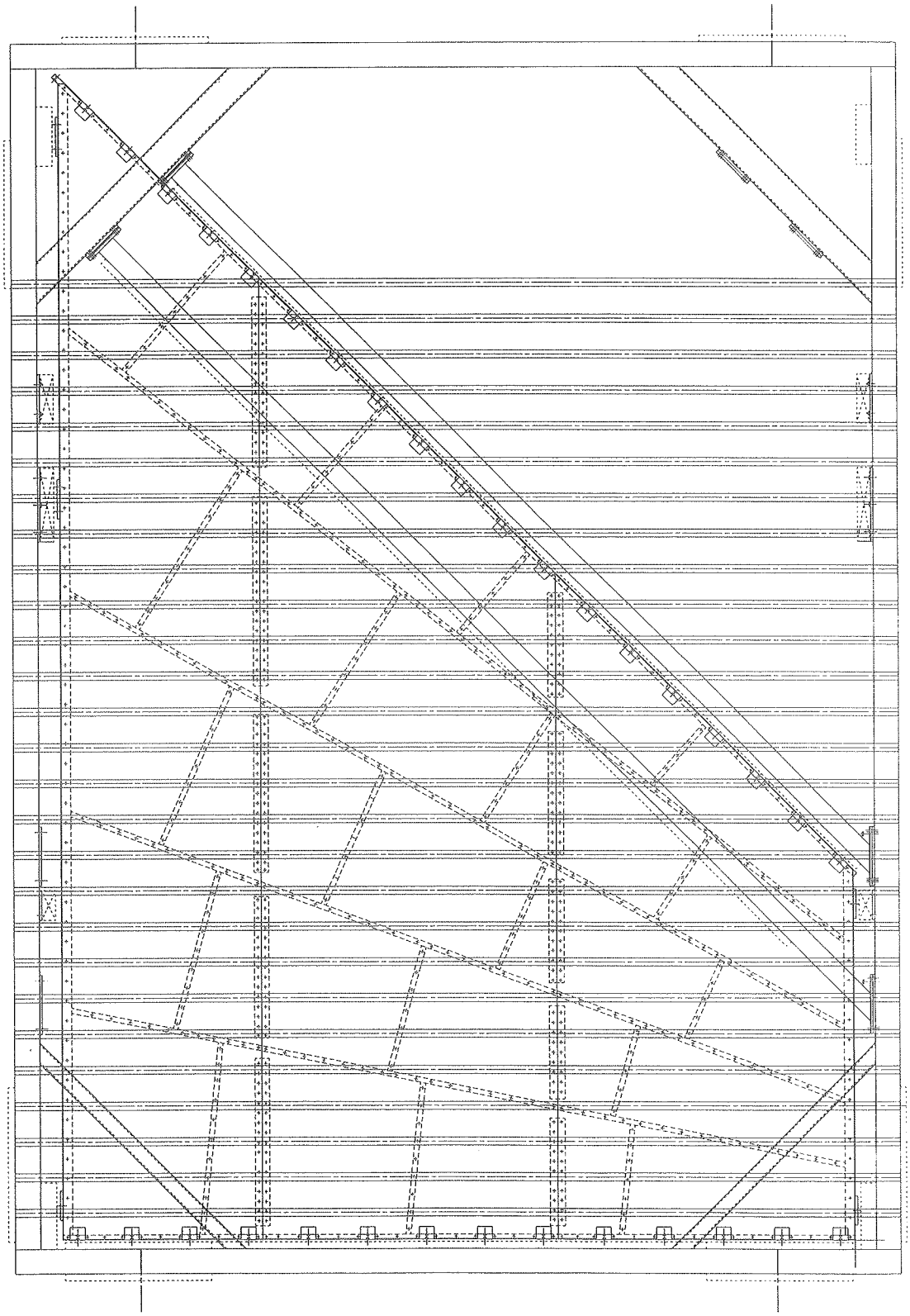

Plotted by edch. on 29-Jun-00 . File. frame-C2b.plf

A6

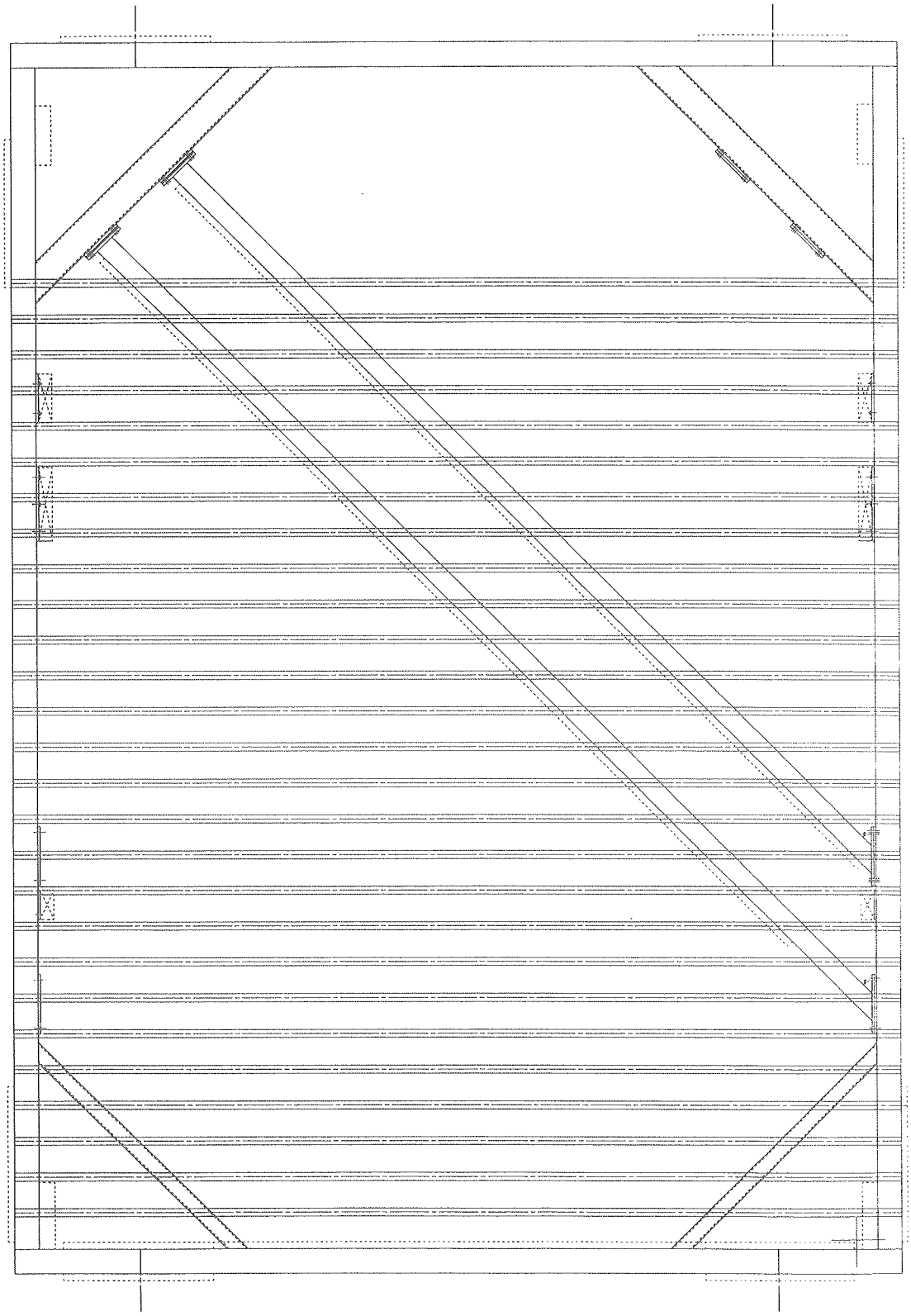

plotted by edch, on 29-Jun-00 , File: frame-C2b.pf

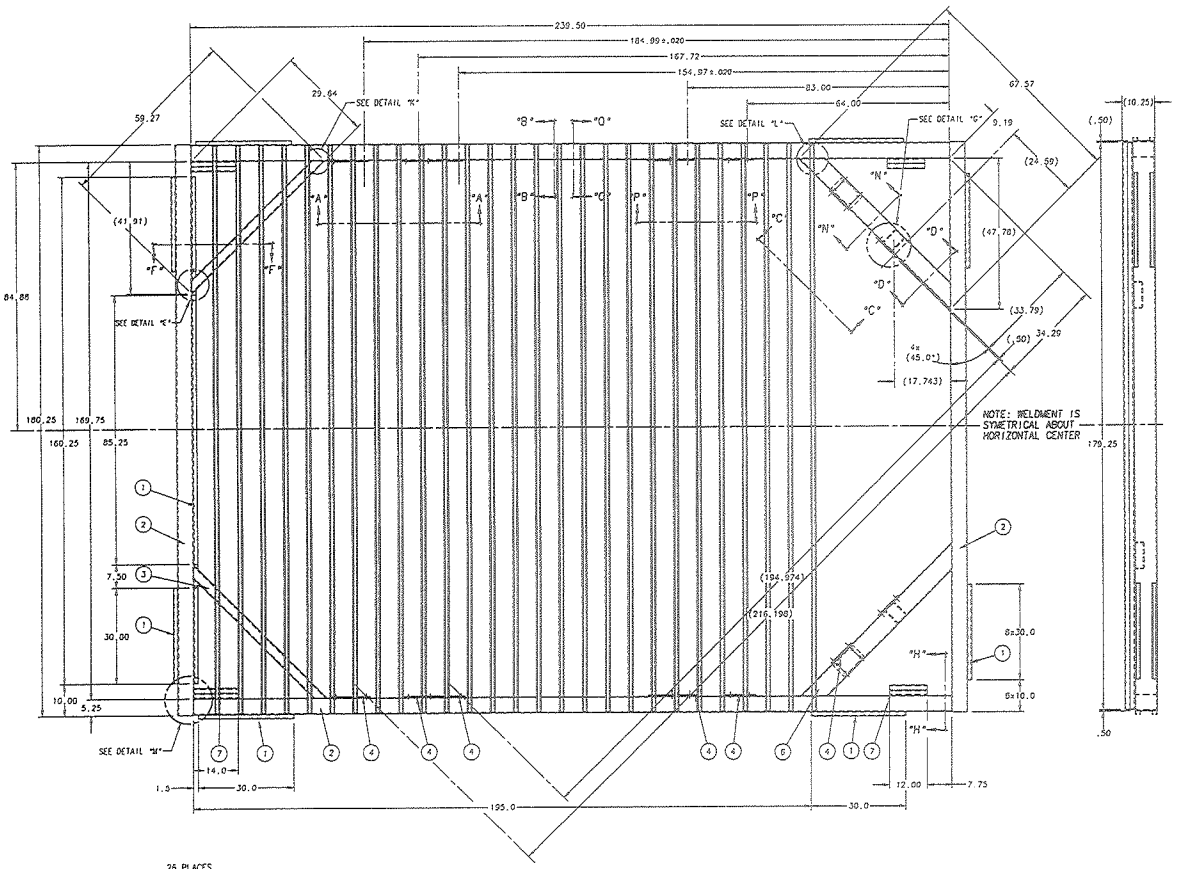

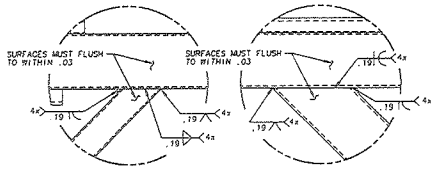

DETAIL "K"
SCALE: .25

DETAIL "L"
SCALE: .25

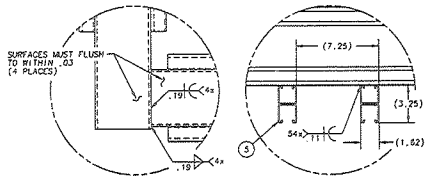

DETAIL "M"
SCALE: .25

DETAIL "J"
SCALE: .25

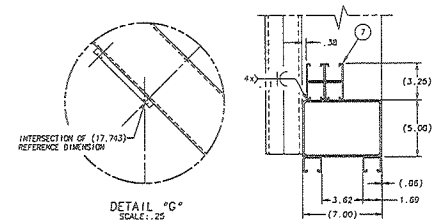

DETAIL "G"
SCALE: .25

SECTION "H-H"
SCALE: .25

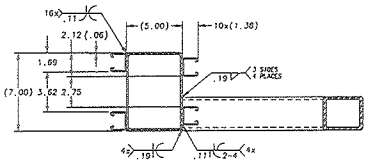

SECTION "F-F"
SCALE: .25

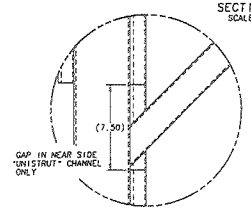

DETAIL "E"
SCALE: .25

NOTE: DOUBLE "UNISTRUT" CHANNEL ITEM #5 NOT SHOWN IN DETAILS "K,L & E" FOR CLARITY

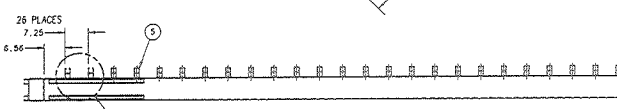

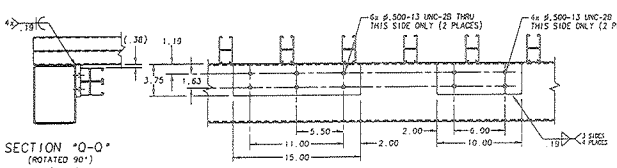

SECTION "O-O"
(ROTATED 90°)
SCALE: .188

SECTION "P-P"
SCALE: .188

NOTE:
ALL WELDED PADS MUST BE FLUSH TO .03 BELOW TOP SURFACE OF TUBE.

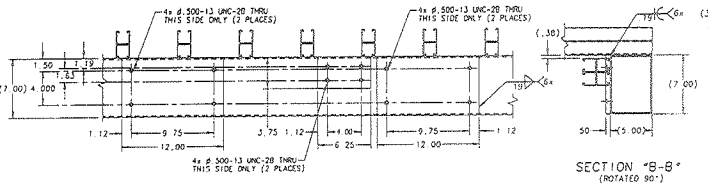

SECTION "A-A"
SCALE: .188

SECTION "B-B"
(ROTATED 90°)
SCALE: .188

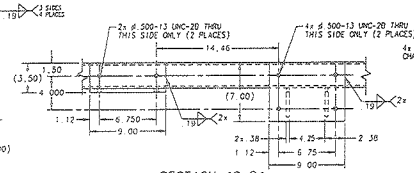

SECTION "C-C"
SCALE: .188

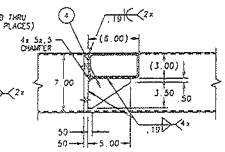

SECTION "D-D"
(ROTATED 90°)
SCALE: .188

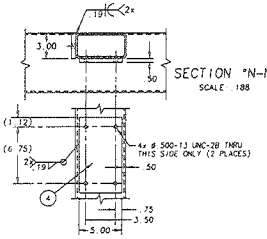

SECTION "N-N"
SCALE: .188

NOTES:
- ALL WELDS TO CONFORM TO A.W.S. D1.1-2000
  ALL WELDING MATERIAL TO BE E70XX
- APPROMATE WEIGHT- 3050 POUNDS

ITEM NO.	PART NO.	DESCRIPTION OR SIZE	QTY. REQ.
7	P100C41	"UNISTRUT" 1-5/8 DOUBLE CHANNEL(OR EQUAL)	4.5'
6	COMM./STK.	3.0x6.0x.25 A500 GR.B STRUCTURAL STL.TUBE	11.5'
5	P1001	"UNISTRUT" 1-5/8 DOUBLE CHANNEL	400'
4	COMM./STK.	BAR/PLATE ASTM A-36 H.R.S.	100#
3	COMM./STK.	3.0x3.0x.25 A500 GR.B STRUCTURAL STL.TUBE	10'
2	COMM./STK.	5.0x7.0x.19 A500 GR.B STRUCTURAL STL.TUBE	70'
1	P3000	"UNISTRUT" 1-5/8 x 1-3/8 CHANNEL	68'

PARTS LIST

ITEM NO.	PART NO	DESCRIPTION OR SIZE	QTY. REQ.

UNLESS OTHERWISE SPECIFIED
DECIMAL TOLERANCES:
.X±.1 .XX±.03 .XXX±.010
ANGULAR TOLERANCE: ±1°
1) MEAN ALL SHARP EDGES .015 MAX.
2) DO NOT SCALE DRAWING
3) DIMENSIONS SHOWN WITH ARCH 1/4 ON SHEET
4) MAX. ALL MACH. SURFACES 125

ORIGINATOR	ED CHI	05/15/00
DRAWN	K. POTTER	05/15/00
CHECKED	ED CHI	06/26/00
APPROVED	ED CHI	06/26/00
USED ON	ME-380717	
MATERIAL	SEE PARTS LIST	

FERMI NATIONAL ACCELERATOR LABORATORY
UNITED STATES DEPARTMENT OF ENERGY

PPD/MECHANICAL SUPPORT
D-ZERO B/C-LAYER PIXEL FRAME
STRONG BACK TRANSPORT/LIFTING FRAME WELDMENT

SCALE	DRAWING NUMBER	SHEET	REV
.07	3823.130-ME-386617	1 OF 1	

CREATED WITH MS2 1 GROUP DOMS

Plotted by gdchi on 29-Jun-2000 , File 38661701_.pff

REV	DESCRIPTION	DRAWN	DATE
		APPROVED	DATE

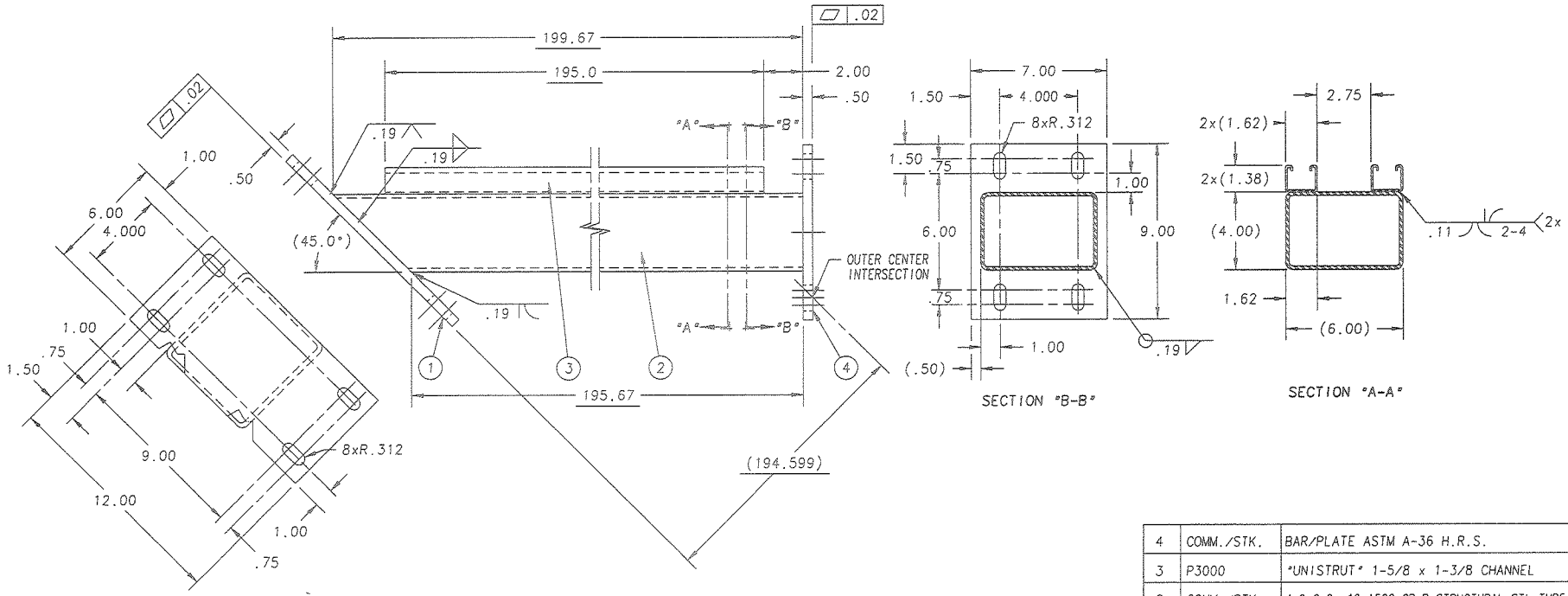

ITEM	PART NO.	DESCRIPTION OR SIZE	QTY.
4	COMM./STK.	BAR/PLATE ASTM A-36 H.R.S.	1
3	P3000	"UNISTRUT" 1-5/8 x 1-3/8 CHANNEL	2
2	COMM./STK.	4.0x6.0x.19 A500 GR.B STRUCTURAL STL.TUBE	1
1	COMM./STK.	BAR/PLATE ASTM A-36 H.R.S.	1

PARTS LIST

UNLESS OTHERWISE SPECIFIED	ORIGINATOR	ED CHI	05/15/00
DECIMAL TOLERANCES:	DRAWN	K.POTTER	05/15/00
.X=±.1 XX=±.03 .XXX=±.010	CHECKED	ED CHI	06/26/00
ANGULAR TOLERANCE: ±1°	APPROVED	ED CHI	06/26/00

1) BREAK ALL SHARP EDGES .015 MAX.
2) DO NOT SCALE DRAWING.
3) DIMENSIONS BASED UPON ANSI Y14.5M-1982
4) MAX. ALL MACH. SURFACES 125

USED ON: ME-386717

MATERIAL: SEE PARTS LIST

NOTES:

- ALL WELDS TO CONFORM TO A.W.S. D1.1-2000 ALL WELDING MATERIAL TO BE E70XX
- APPROMATE WEIGHT= 270 POUNDS

FERMI NATIONAL ACCELERATOR LABORATORY
UNITED STATES DEPARTMENT OF ENERGY

PPD/MECHANICAL SUPPORT
D-ZERO B/C-LAYER PIXEL FRAMES
"C" DIAGONAL SUPPORT

SCALE	DRAWING NUMBER	SHEET	REV
.25	3823.130-MC-386619	1 OF 1	

CREATED WITH MS2.1 | GROUP DOMS

Plotted by edchi on 29-Jan-2000 . File 38661901_.plt

A8

REV	DESCRIPTION	DRAWN / APPROVED	DATE / DATE

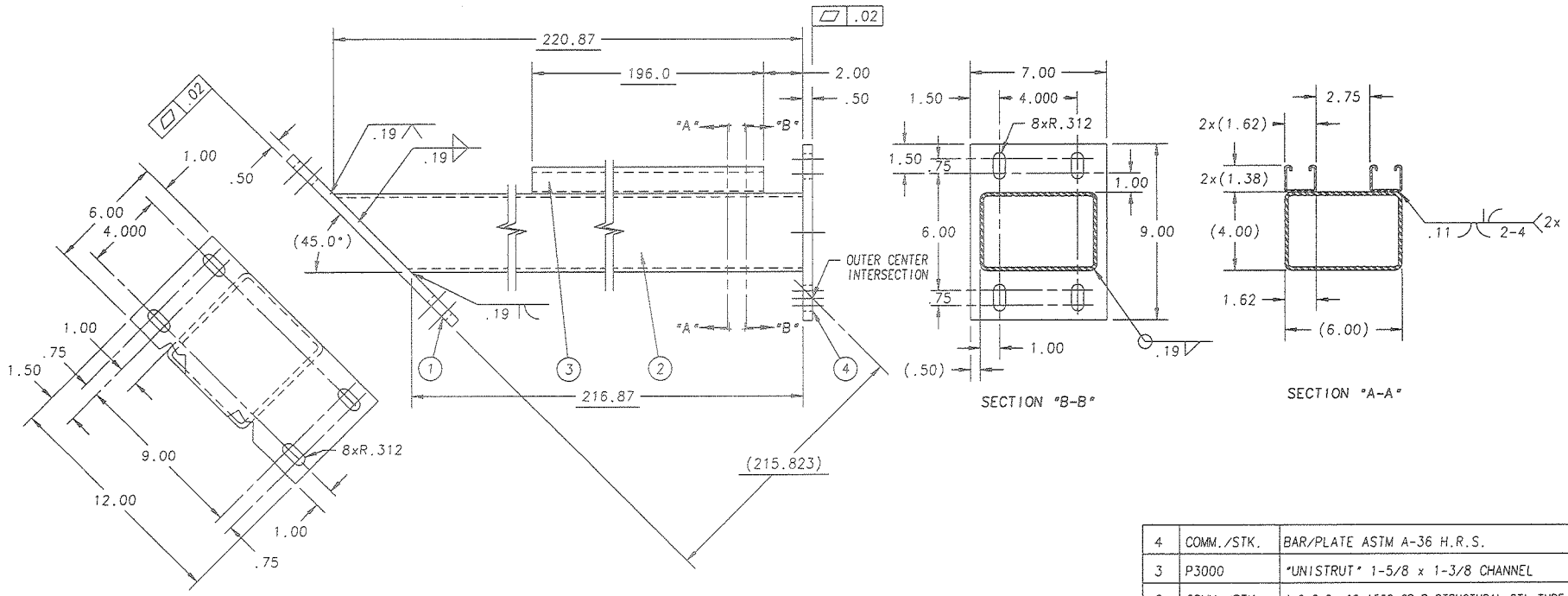

ITEM	PART NO.	DESCRIPTION OR SIZE	QTY.
4	COMM./STK.	BAR/PLATE ASTM A-36 H.R.S.	1
3	P3000	"UNISTRUT" 1-5/8 x 1-3/8 CHANNEL	2
2	COMM./STK.	4.0x6.0x.19 A500 GR.B STRUCTURAL STL.TUBE	1
1	COMM./STK.	BAR/PLATE ASTM A-36 H.R.S.	1

PARTS LIST

UNLESS OTHERWISE SPECIFIED	ORIGINATOR	ED CHI	05/15/00
DECIMAL TOLERANCES:	DRAWN	K.POTTER	05/15/00
.X=±.1 XX=±.03 .XXX=±.010	CHECKED	ED CHI	06/26/00
ANGULAR TOLERANCE: ±1°	APPROVED	ED CHI	06/26/00
1) BREAK ALL SHARP EDGES .015 MAX.	USED ON	ME-386717	
2) DO NOT SCALE DRAWING.			
3) DIMENSIONS BASED UPON ANSI Y14.5M-1982	MATERIAL	SEE PARTS LIST	
4) MAX. ALL MACH. SURFACES 125 √			

NOTES:

- ALL WELDS TO CONFORM TO A.W.S. D1.1-2000 ALL WELDING MATERIAL TO BE E70XX
- APPROMATE WEIGHT= 290 POUNDS

FERMI NATIONAL ACCELERATOR LABORATORY
UNITED STATES DEPARTMENT OF ENERGY

PPD/MECHANICAL SUPPORT
D-ZERO B/C-LAYER PIXEL FRAMES
"B" DIAGONAL SUPPORT

SCALE	DRAWING NUMBER	SHEET	REV
.25	3823.130-MC-386618	1 OF 1	

CREATED WITH MS2.1 GROUP DOMS

Plotted by edchi on 29-Jan-2000 , File 38661801_.pff

REV	DESCRIPTION	DRAWN	DATE
		APPROVED	DATE

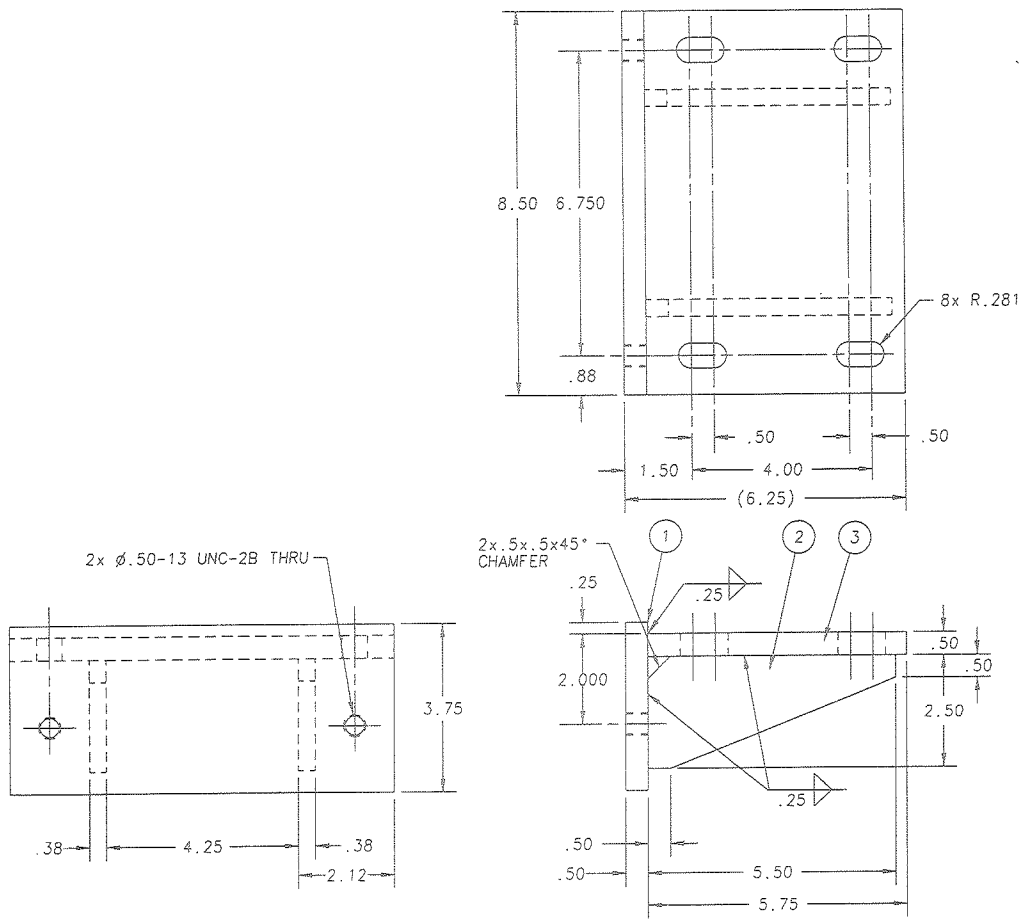

NOTES:

- ALL WELDS TO CONFORM TO A.W.S. D1.1-2000 ALL WELDING MATERIAL TO BE E70XX
- APPROMATE WEIGHT= 15 POUNDS

ITEM	PART NO.	DESCRIPTION OR SIZE	QTY.
3	COMM./STK.	BAR/PLATE ASTM A-36 H.R.S.	1
2	COMM./STK.	BAR/PLATE ASTM A-36 H.R.S.	2
1	COMM./STK.	BAR/PLATE ASTM A-36 H.R.S.	1

PARTS LIST

UNLESS OTHERWISE SPECIFIED	ORIGINATOR	ED CHI	05/15/00
DECIMAL TOLERANCES: .X=±.1 XX=±.03 .XXX=±.010	DRAWN	K.POTTER	05/15/00
ANGULAR TOLERANCE: ±1°	CHECKED	ED CHI	06/26/00
	APPROVED	ED CHI	06/26/00

(1) BREAK ALL SHARP EDGES .015 MAX.
(2) DO NOT SCALE DRAWING.
(3) DIMENSIONS BASED UPON ANSI Y14.5M-1982
(4) MAX. ALL MACH. SURFACES 125√

USED ON: ME-386717

MATERIAL: SEE PARTS LIST

FERMI NATIONAL ACCELERATOR LABORATORY
UNITED STATES DEPARTMENT OF ENERGY

PPD/MECHANICAL SUPPORT
D-ZERO B/C-LAYER PIXEL FRAMES
REMOVABLE BRACKET

SCALE	DRAWING NUMBER	SHEET	REV
.5	3823.130-MC-386625	1 OF 1	

CREATED WITH MS2.1 GROUP DOMS

Plotted by edchi on 29-Jun-2000 , File 38662501_.pfl

A10

REV	DESCRIPTION	DRAWN / APPROVED	DATE / DATE

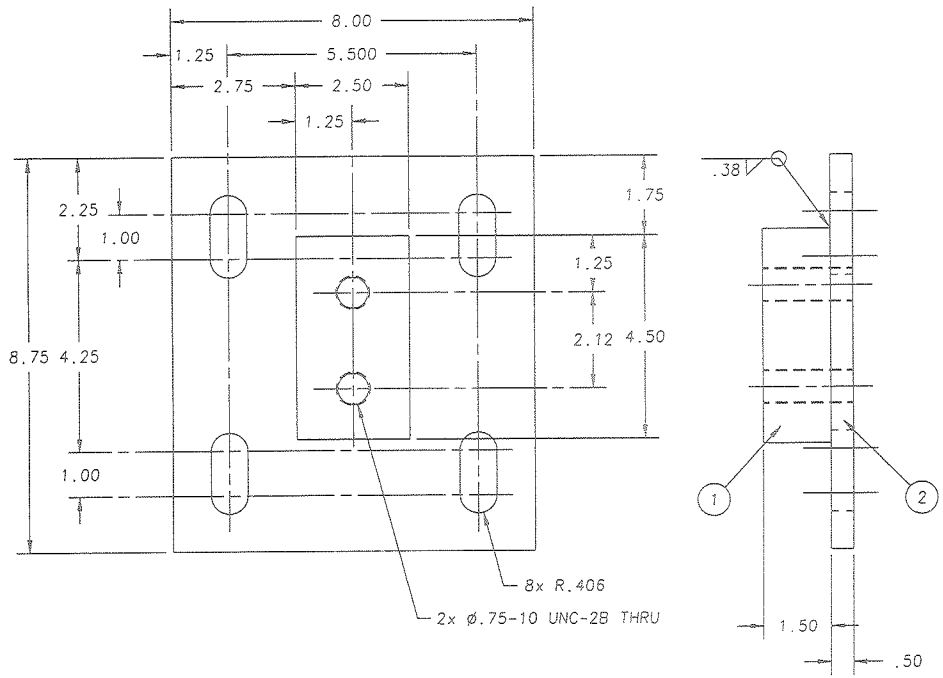

ITEM	PART NO.	DESCRIPTION OR SIZE	QTY.
2	COMM./STK.	BAR/PLATE ASTM A-36 H.R.S.	1
1	COMM./STK.	BAR/PLATE ASTM A-36 H.R.S.	1

PARTS LIST

UNLESS OTHERWISE SPECIFIED	ORIGINATOR	ED CHI	05/15/00
DECIMAL TOLERANCES:	DRAWN	K.POTTER	05/15/00
.X=±.1 XX=±.03 .XXX=±.010	CHECKED	ED CHI	06/26/00
ANGULAR TOLERANCE: ±1°	APPROVED	ED CHI	06/26/00
1) BREAK ALL SHARP EDGES .015 MAX.	USED ON	ME-386717	
2) DO NOT SCALE DRAWING.			
3) DIMENSIONS BASED UPON ANSI Y14.5M-1982	MATERIAL	SEE PARTS LIST	
4) MAX. ALL MACH SURFACES 125			

FERMI NATIONAL ACCELERATOR LABORATORY
UNITED STATES DEPARTMENT OF ENERGY

PPD/MECHANICAL SUPPORT
D-ZERO B/C-LAYER PIXEL FRAMES
LIFTING LUG PLATE

SCALE	DRAWING NUMBER	SHEET	REV
.5	3823.130-MC-386626	1 OF 1	

CREATED WITH MS2.1 GROUP: DOMS

NOTES:

- ALL WELDS TO CONFORM TO A.W.S. D1.1-2000
  ALL WELDING MATERIAL TO BE E70XX
- APPROMATE WEIGHT= 15 POUNDS

A11

Plotted by edchi on 29-Jan-2000 , File 38662601__.pff

REV	DESCRIPTION	DRAWN	DATE
		APPROVED	DATE

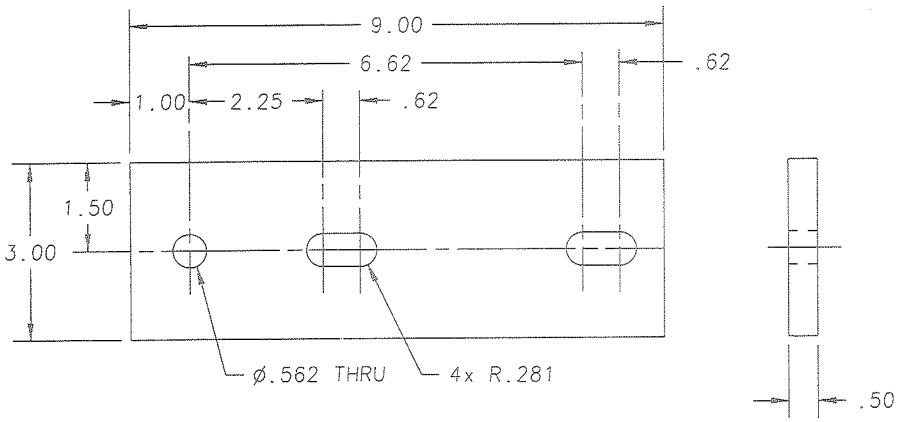

UNLESS OTHERWISE SPECIFIED	ORIGINATOR	ED CHI	05/15/00
DECIMAL TOLERANCES:	DRAWN	K.POTTER	05/15/00
.X=±.1 XX=±.03 .XXX=±.010	CHECKED	ED CHI	06/26/00
ANGULAR TOLERANCE: ±1°	APPROVED	ED CHI	06/26/00
1) BREAK ALL SHARP EDGES .015 MAX.	USED ON	ME-386717	
2) DO NOT SCALE DRAWING.			
3) DIMENSIONS BASED UPON ANSI Y14.5M-1982	MATERIAL	ASTM A-36 H.R.S.	
4) MAX. ALL MACH. SURFACES 125 √			

FERMI NATIONAL ACCELERATOR LABORATORY
UNITED STATES DEPARTMENT OF ENERGY

PPD/MECHANICAL SUPPORT D-ZERO B/C-LAYER PIXEL FRAMES SUPPORT PLATE

SCALE	DRAWING NUMBER	SHEET	REV
.5	3823.130-MB-386718	1 OF 1	

CREATED WITH : MS2.1 GROUP: DOMS

Plotted by edchi on 29-Jun-2000 , File. 38671801___.pff

A12

REV	DESCRIPTION	DRAWN	DATE
		APPROVED	DATE

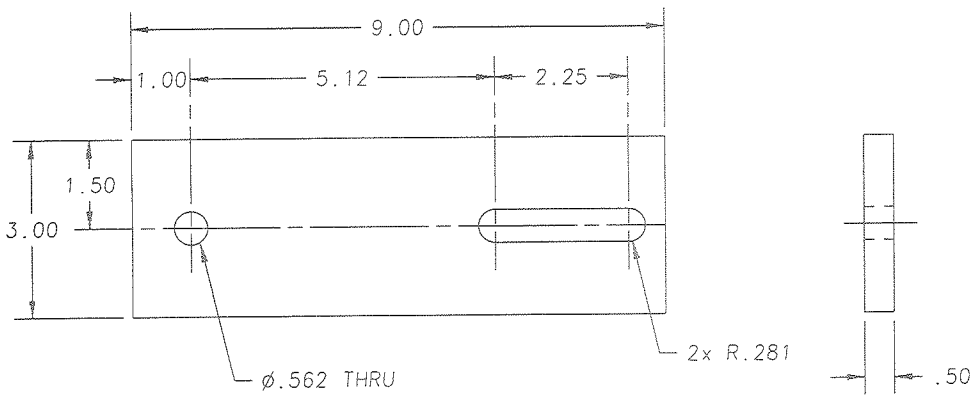

UNLESS OTHERWISE SPECIFIED	ORIGINATOR	ED CHI	05/15/00
DECIMAL TOLERANCES:	DRAWN	K.POTTER	05/15/00
.X=±.1 XX=±.03 .XXX=±.010	CHECKED	ED CHI	06/26/00
ANGULAR TOLERANCE: ±1°	APPROVED	ED CHI	06/26/00
1) BREAK ALL SHARP EDGES .015 MAX.	USED ON	ME-386717	
2) DO NOT SCALE DRAWING.			
3) DIMENSIONS BASED UPON ANSI Y14.5M-1982	MATERIAL	ASTM A-36 H.R.S.	
4) MAX. ALL MACH. SURFACES 125 √			

FERMI NATIONAL ACCELERATOR LABORATORY
UNITED STATES DEPARTMENT OF ENERGY

PPD/MECHANICAL SUPPORT
D-ZERO B/C-LAYER PIXEL FRAMES
SUPPORT PLATE

SCALE	DRAWING NUMBER	SHEET	REV
.5	3823.130-MB-386719	1 OF 1	

CREATED WITH : MS2.1 GROUP: DOMS

Plotted by edchi on 29-Jun-2000 . File. 38671901__.pff

REV	DESCRIPTION	DRAWN / APPROVED	DATE / DATE

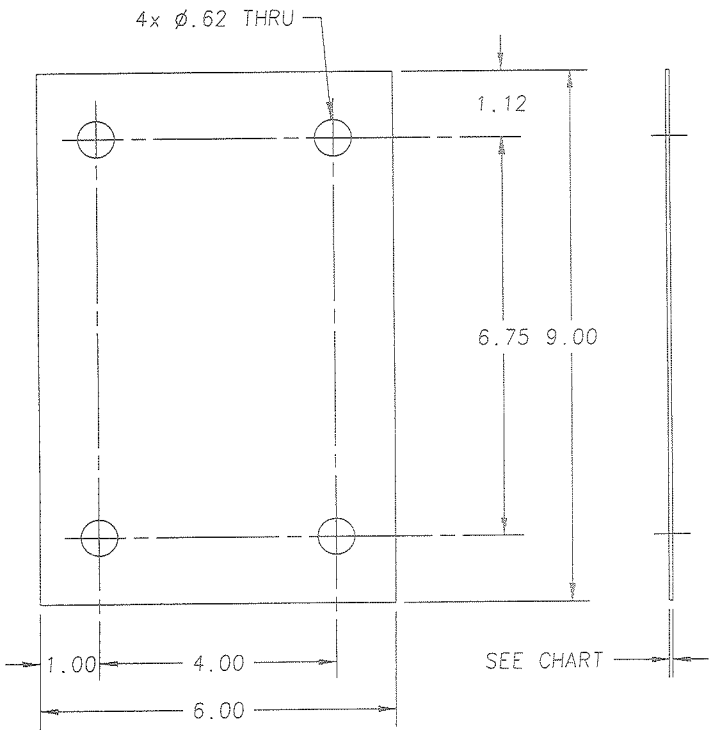

THICKNESS CHART:

#386623-1 = .125" THICK
#386623-2 = .063" THICK
#386623-3 = .031" THICK

UNLESS OTHERWISE SPECIFIED	ORIGINATOR	ED CHI	05/15/00
DECIMAL TOLERANCES:	DRAWN	K.POTTER	05/15/00
.X=±.1 XX=±.03 .XXX=±.010	CHECKED	ED CHI	06/26/00
ANGULAR TOLERANCE: ±1°	APPROVED	ED CHI	06/26/00
1) BREAK ALL SHARP EDGES .015 MAX.	USED ON	ME-386717	
2) DO NOT SCALE DRAWING.			
3) DIMENSIONS BASED UPON ANSI Y14.5M-1982	MATERIAL	MILD STEEL 1018 OR EQUAL	
4) MAX. ALL MACH. SURFACES 125			

FERMI NATIONAL ACCELERATOR LABORATORY
UNITED STATES DEPARTMENT OF ENERGY

PPD/MECHANICAL SUPPORT D-ZERO B/C-LAYER PIXEL FRAMES SHIM

SCALE	DRAWING NUMBER	SHEET	REV
.5	3823.130-MB-386623	1 OF 1	

CREATED WITH : MS2.1 GROUP: DOMS

Plotted by edchi on 29-Jun-2000 . File: 38662301____.pff

A14