Zhijing: I revised this Note as follows:
1) Items marked in orange on this page.
2) Added Load Tests.
3) Added a note on page 14.
Please check these revisions and put this in my MS219 mail box.
Thanks,
Andy (x-4131)
3/28/2000

5022TA

BELOW-THE-HOOK LIFTING DEVICE
Engineering Note Cover Page

Lifting Device Numbers:

FNAL Site No.:_____ if applicable Div. Specific No.: 113 if applicable Asset No. _____ if applicable

ASME B30.20 Group: (check one)
- ✓ Group I Structural and Mechanical Lifting Devices
- Group II Vacuum Lifting Devices
- Group III Magnets, Close Proximity Operated
- Group IV Magnets, Remote Operated

Device Name or Description: Lifting fixture for unloaded MDT panels

Device was: (check all applicable)
- Purchased from a Commercial Lifting Device Manufacturer
  mfg. name: _____
- ✓ Designed and Built at Fermilab
- Designed by Fermilab and Built by a Vendor
  Assy drawing number: _____
- Provided by a User or Other Laboratory
- Other. Describe: _____

Engineering Note Prepared by: Andy Stefanik Date: 3/17/2000

Engineering Note Reviewed by: [signature] Date: 3/22/2000

Lifting Device Data:

Capacity: 300 Lb panel - lifting along narrow edge of panel

Fixture Weight: 50 Lbs

Service: (normal) heavy severe (refer to B30.20 for definitions)

Duty Cycle: — 8, 16 or 24 hour rating (applicable to groups III, and IV)

Inspections Frequency: Normal Service Inspection Classification

Rated Load Test by FNAL (if applicable): Date: _____ Load: #1: 500 Lbs @ top lift point
#2: 200 Lbs @ side lift point

Check if Load Test was by Vendor and attach the certificate.

Satisfactory Load Test Witnessed by: _____

Signature (of Load Test Witness): _____

Notes or Special Information:
Load test procedures attached.

Copy: Replace with original after load test.

FERMILAB ENGINEERING NOTE	SECTION	PROJECT	SERIAL-CATEGORY	PAGE

SUBJECT	NAME	DATE	REVISION DATE
Lifting fixture for unloaded MDT panels	AMS	3/13/2000	▷ 3/28/2000

Table of Contents

Section	Subject	Page
1	Description	1-2.3
2	MDT panels - Dimensions & c.g.s	3-5
3	Weight of largest panel assembly	6,7
4	Allowable design stresses	8,9
5	Lifting fixture calculations	10-23
	5.1 Horizontal position	12-20
	5.2 Vertical position	21-23
6	Honeycomb panel - Bearing & shear tear out stress check	24
7	Adjustable block	25,26
▷ 8	Load tests	1,2

FERMILAB ENGINEERING NOTE	SECTION	PROJECT	SERIAL-CATEGORY	PAGE 1
SUBJECT: Lifting fixture for unloaded MDT panels			NAME: AMS	
			DATE: 3/13/2000	REVISION DATE

1. Description

The lifting fixture will be used to lift an unloaded MDT honeycomb panel assembly from the horizontal to the vertical position, to carry the assembly around in the vertical position, and to lay the assembly down in the horizontal position from the vertical position. "Unloaded" means MDTs are not mounted on the panel assembly.

The lifting fixture consists of two bars that bolt to the panel assembly and an adjustable block for the swivel hoist ring. Block position is adjusted to get the hoist ring in-line with the panel assembly center-of-gravity. Bolts secure the adjustable block to the two bars. Refer to page 10 for sketches that show how the fixture attaches to the panel assembly.

A sketch showing the fixture attached to the largest panel assembly is shown on page 2.1. Parts on pgs 2.2 & 2.3.

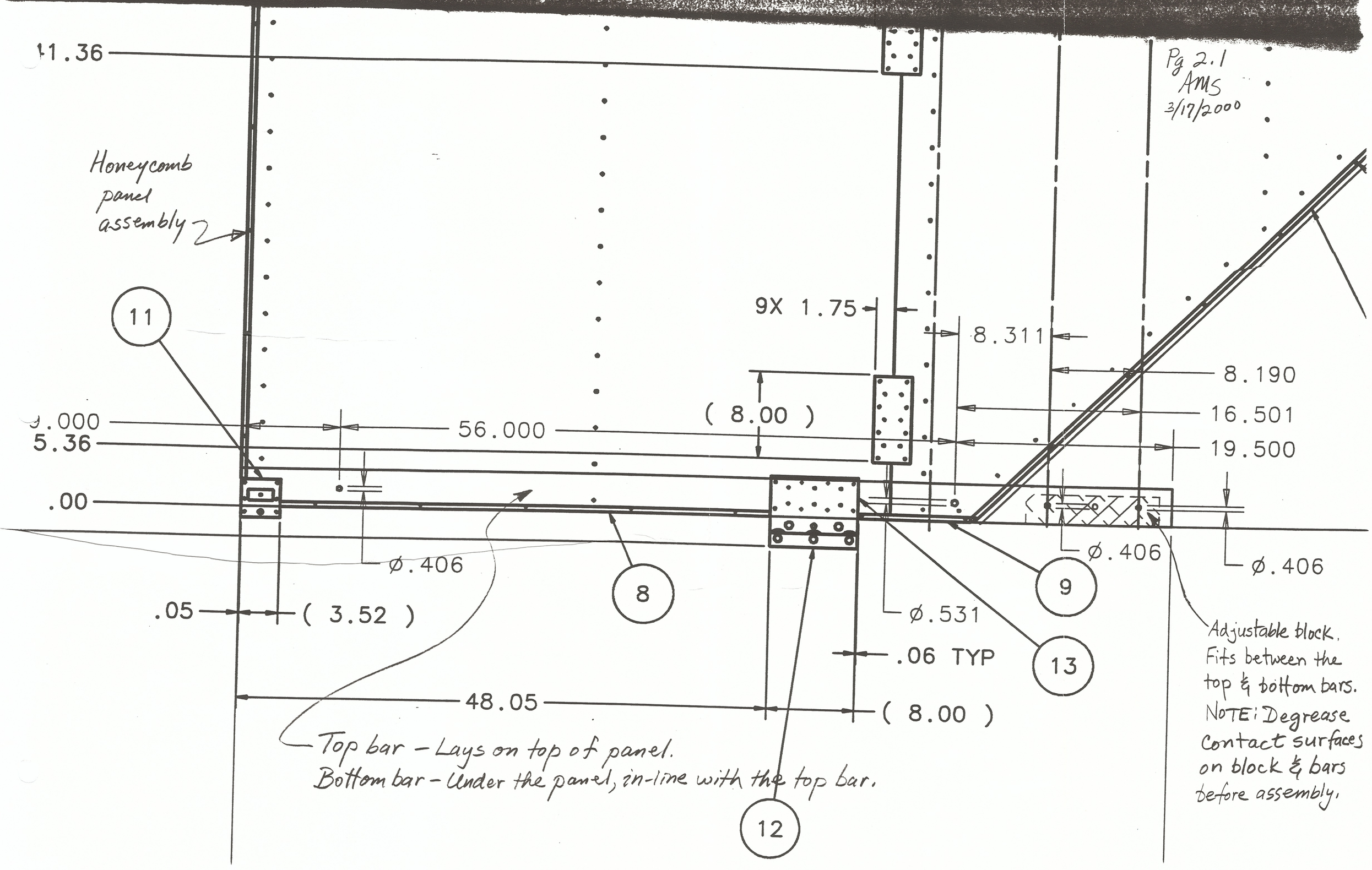
11.36
Pg 2.1
AMS
3/17/2000
Honeycomb
panel
assembly
11
9X 1.75
8.311
8.190
16.501
19.500
(8.00)
56.000
5.36
.00
Ø.406
Ø.406
Ø.406
8
9
13
12
.05
(3.52)
Ø.531
.06 TYP
48.05
(8.00)
Top bar - Lays on top of panel.
Bottom bar - Under the panel, in-line with the top bar.
Adjustable block.
Fits between the
top & bottom bars.
NOTE: Degrease
Contact surfaces
on block & bars
before assembly.

FERMILAB
ENGINEERING NOTE

SECTION	PROJECT	SERIAL-CATEGORY	PAGE
			2.2

SUBJECT: Unloaded MDT frame lifting fixture Dimensions: Inches

NAME: AMS

DATE: 3/16/2000

REVISION DATE:

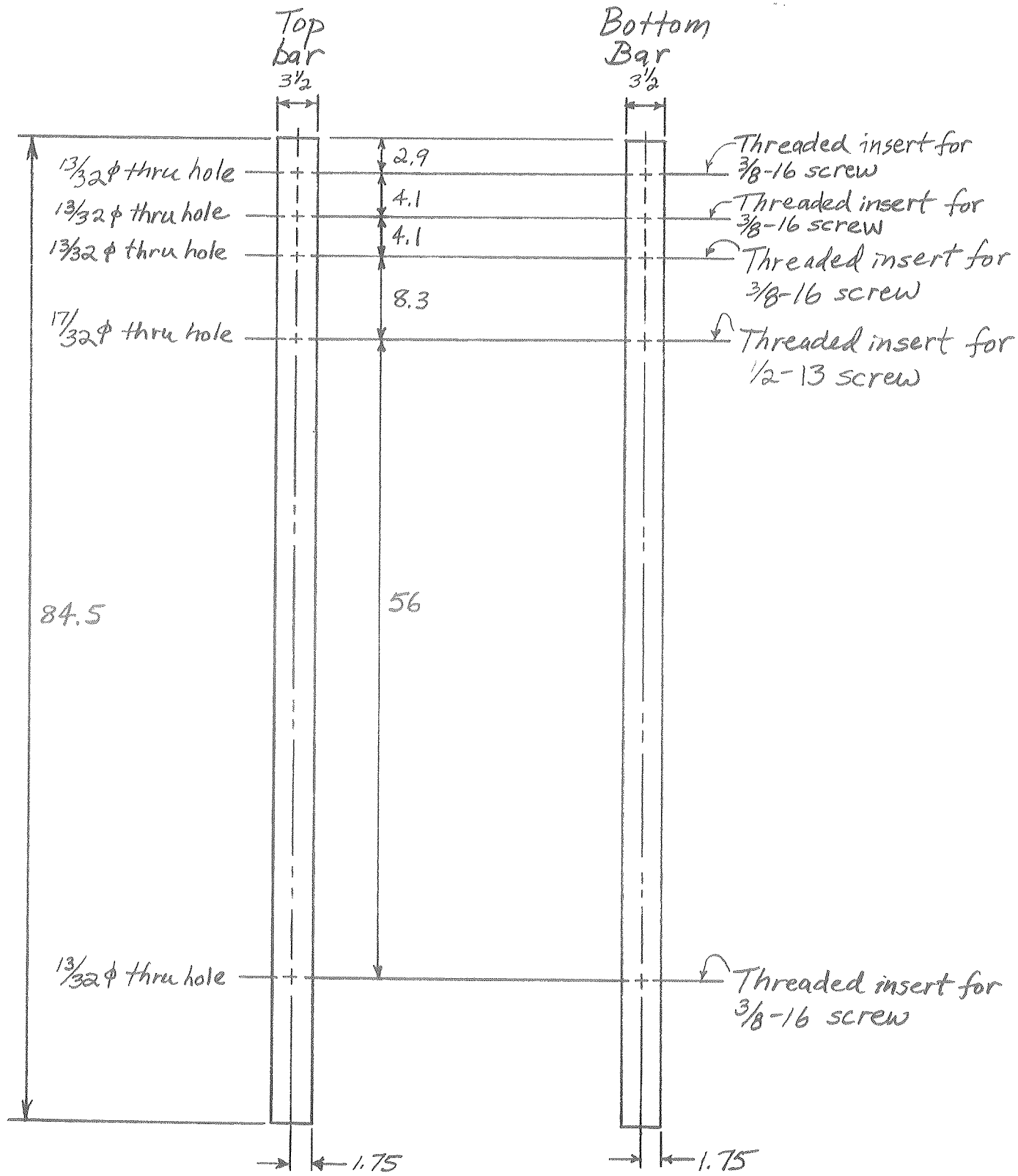

Material: Aluminum rectangle, 6061-T6511, ¾ x 3½ x 84.5

FERMILAB ENGINEERING NOTE	SECTION	PROJECT	SERIAL-CATEGORY	PAGE 2.3

SUBJECT: Unloaded MDT frame lifting fixture
Dimensions: Inches

NAME: AMS

DATE: 3/17/2000

REVISION DATE:

Adjustable block

Material: Aluminum alloy, 6061-T6, 1 x 2.75 x 12

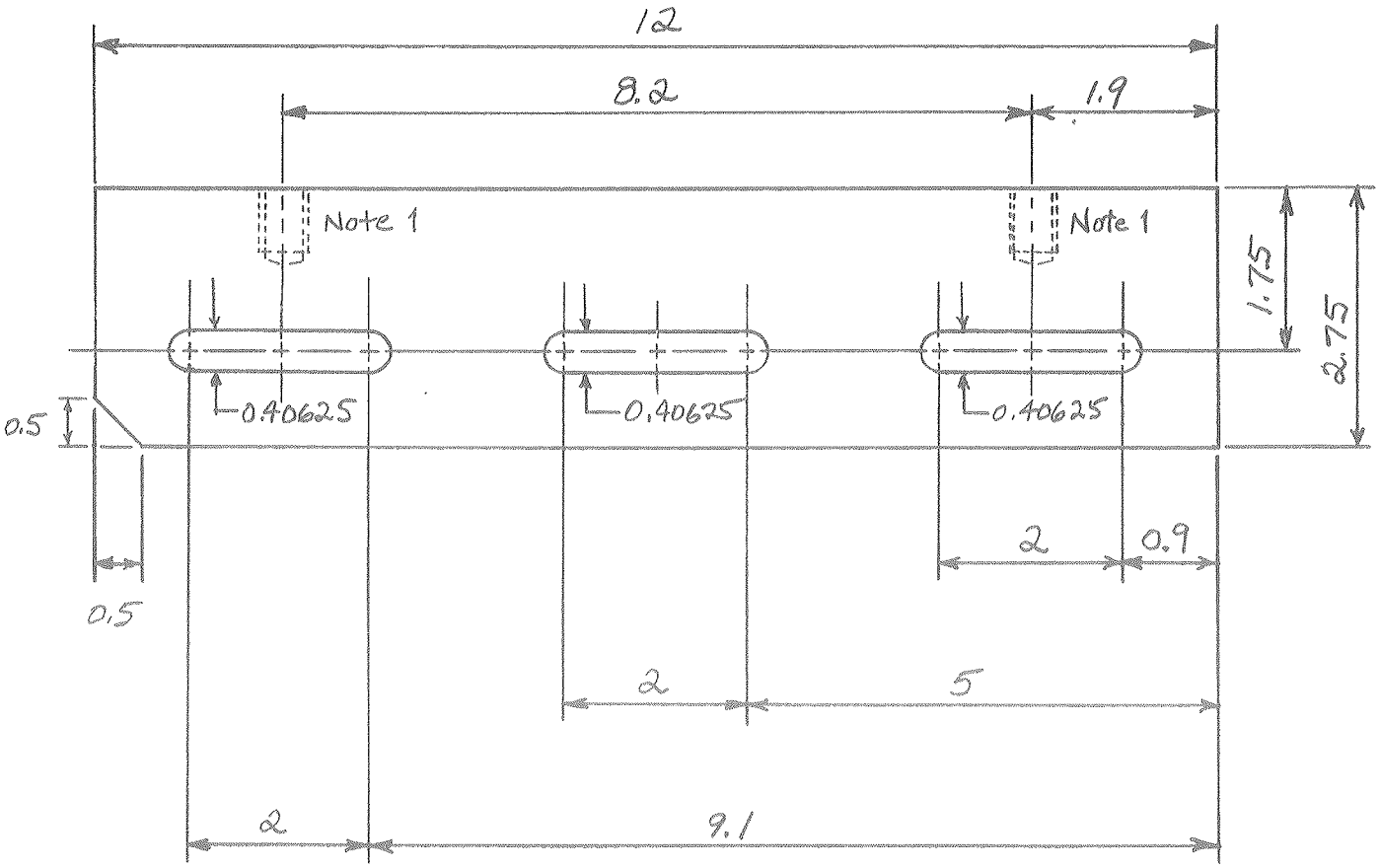

Notes

1) Threaded insert for swivel hoist ring.

2) Degrease block & contact areas on the top and bottom bars before assembly.

2. SUBJECT: MDT panels – Dimensions & Center of gravity

NAME: AMS

DATE: 2/24/2000 | REVISION DATE

Panel assembly #0-3 Dwg # ME-373893
Panel assembly #1-2 Dwg # ME-373894

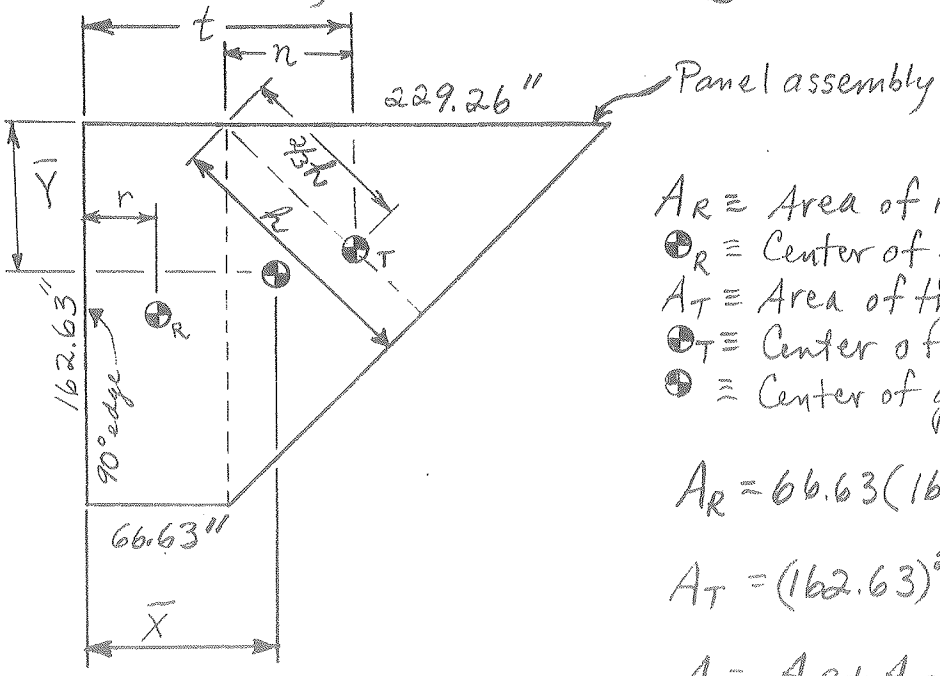

$A_R \equiv$ Area of rectangular section
$\oplus_R \equiv$ Center of gravity-rect. section
$A_T \equiv$ Area of triangular section
$\oplus_T \equiv$ Center of gravity-triangular sec.
$\oplus \equiv$ Center of gravity-panel ass'y

$$A_R = 66.63(162.63) = 10{,}836 \text{ in}^2$$

$$A_T = (162.63)^2/2 = 13{,}224 \text{ in}^2$$

$$A = A_R + A_T = 24{,}060 \text{ in}^2$$

$$h = 162.63/\sqrt{2} = 115''$$

$$\Sigma M_{\substack{90° \\ edge}} = 0 = A_R r - A_T t - A\bar{X}$$

$$n = (2/3)h/\sqrt{2} = 54.21''$$

$$\bar{X} = (A_R r + A_T t)/A$$

$$t = 66.63 + 54.21 = 120.84''$$

$$\bar{X} = \frac{10{,}836\left(\frac{66.63}{2}\right) + 13{,}224(120.84)}{24{,}060} = \underline{81.42''}$$

$$\bar{Y} = \frac{10{,}836\left(\frac{162.63}{2}\right) + 13{,}224(54.21)}{24{,}060} = \underline{66.42''}$$

Panel assembly # 4-7 Dwg ME-373895

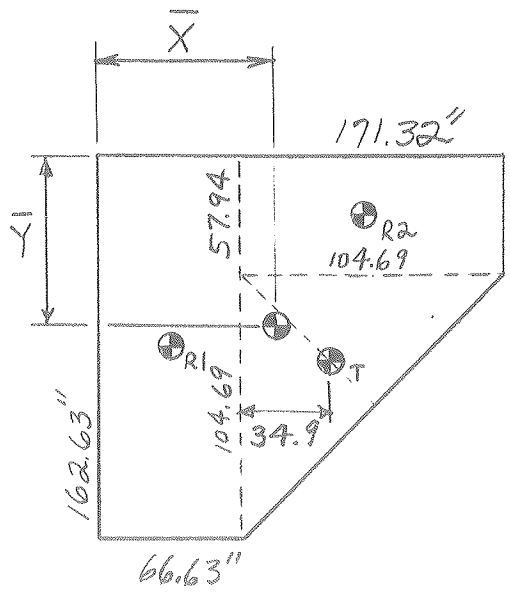

$A_{R1} = 66.63(162.63) = 10{,}836 \text{ in}^2$

$A_{R2} = 57.94(104.69) = 6{,}066 \text{ in}^2$

$A_T = 104.69^2/2 = 5{,}480 \text{ in}^2$

$A = A_{R1} + A_{R2} + A_T = 22{,}382 \text{ in}^2$

$$\bar{X} = \frac{10{,}836\left(\frac{66.63}{2}\right) + 6{,}066\left(66.63 + \frac{104.69}{2}\right) + 5{,}480(66.63 + 34.9)}{22{,}382}$$

$\bar{X} = \underline{73.23''}$

$$\bar{Y} = \frac{10{,}836\left(\frac{162.63}{2}\right) + 6{,}066\left(\frac{57.94}{2}\right) + 5{,}480(57.94 + 34.9)}{22{,}382}$$

$\bar{Y} = \underline{69.95''}$

Panel assembly #5-6 Dwg # ME-373896

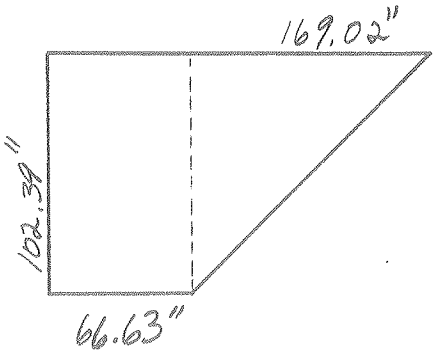

$A_R = 66.63(102.39) = 6{,}822\ in^2$

$A_T = (102.39)^2/2 = 5{,}242\ in^2$

$A = A_R + A_T = 12{,}064\ in^2$

$h = 102.39/\sqrt{2} = 72.4\ in$

$n = (2/3)h/\sqrt{2} = 34.13\ in$

$t = 66.63 + n = 100.76\ in$

$$\bar{X} = \frac{6{,}822\left(\frac{66.63}{2}\right) + 5{,}242(100.76)}{12{,}064} = \underline{62.6''}$$

$$\bar{Y} = \frac{6{,}822\left(\frac{102.39}{2}\right) + 5{,}242(34.13)}{12{,}064} = 43.78''$$

3. SUBJECT: Weight of largest MDT panel assembly (#0-3, #1-2)

NAME: AMS

DATE: 2/25/2000 | REVISION DATE:

The parts in a panel assembly are honeycomb panell, splice plates, edge channels, mounting blocks & rivets.

Aluminum honeycomb panels

Full size cross section –

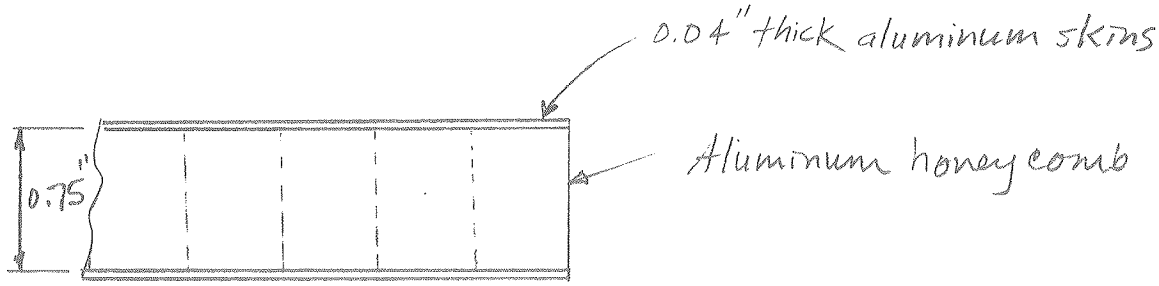

Weight – A 164 1/8" x 60" panel weighs 91 Lbs. Weight & size measured by Jim Fagan at Lab F on 3/1/2000.

Unit weight = 91 Lbs / (164 1/8 x 60) in² = 0.00924 Lbs/in²
= 1.33 Lbs/ft²

Weight of largest panel = 24,060 in² x 0.00924 Lbs/in²
≐ 225 Lbs

Aluminum splice plates

Dimensions : 8" x 3 1/2" x 1/16"

8 (3 1/2) (1/16) (0.1 Lbs/in³) = 0.2 Lbs

Qty = 11 x 2 = 22

Total splice plate wt = 22 x 0.2 = 4.4 Lbs

Aluminum mounting blocks

Blocks $8''(3'')(0.85'') * 0.1 \frac{Lbs}{in^3} = 2.1 Lbs$

Qty = 4

Splice plates

$8''(5.25'')(0.0625'') * 0.1 \frac{Lbs}{in^3} = 0.3 Lbs$

Qty = 8

Total = 4(2.1) + 8(0.3) = 11 Lbs

Edge channels

Total length = 655''

Cross sectional area = $0.1 in^2$

Total weight = $655 in (0.1 in^2) * 0.1 \frac{Lbs}{in^3} = 7 Lbs$

Rivets Qty = 542 wt = 2 Lbs

Total weight for the heaviest panel = 225 + 4.4 + 11 + 7 + 2 = 250 Lbs

4. SUBJECT: Allowable stresses

NAME: AMS

DATE: 3/13/2000 | REVISION DATE:

- The fixture will be made with aluminum alloy 6061-T6511 extruded rectangles.

Follow ASME/ANSI B30.20-1993, Below-the-Hook Lifting Devices to define the allowable stresses. Refer to the Aluminum Design Manual, 6th Edition, 1994, as needed, for help in defining allowable stresses.

$F_y = 35{,}000$ psi

There is no welding on this lifting fixture.

$$F_b = \frac{F_y}{3} = \frac{35{,}000}{3} = 11{,}600 \text{ psi}$$

$$F_v = \frac{F_b}{2} = \frac{11{,}600}{2} = 5{,}800 \text{ psi}$$

Applicable 1" from weld

Bearing on flat surfaces and pins and on bolts in slotted holes $= \frac{F_{by}}{1.5 n_y} = \frac{56{,}000}{1.5(3)} = 12{,}400$ psi

Bearing on rivets & bolts $= \frac{F_{by}}{n_y} = \frac{56{,}000}{3} = 18{,}600$ psi

- Steel bolts will be used to hold the fixture together. Refer to the AISC Manual of Steel Construction - ASD, 9th Edition, as needed, for help in defining allowable stresses.

Use SAE Grade 5 bolts minimum.

$F_u = 120{,}000$ psi $\quad F_y = 85{,}000$ psi (Proof stress actually)

For 1/4" to 1" nominal diameter threaded fasteners.

For an AISC bearing connection with threads in the shear plane,

$$F_{t_{AISC}} = \frac{F_u}{3} = \frac{120{,}000}{3} = 40{,}000 \text{ psi}$$

$$F_t = \frac{F_y}{3} = \frac{85{,}000}{3} = \underline{28{,}000 \text{ psi}} < 40{,}000 \quad \underline{\underline{ok}}$$

$$F_v = \frac{28{,}000}{2} = \underline{14{,}000 \text{ psi}} < 20{,}000 \text{ psi} \quad \underline{\underline{ok}}$$

$$F_{v_{AISC}} = \frac{F_t}{2} = \frac{40{,}000}{2} = 20{,}000 \text{ psi}$$

$\therefore$ Allowable tensile stress = 28,000 psi

Allowable shear stress = 14,000 psi

5. SUBJECT: Lifting fixture calculations

NAME: AMS

DATE: 3/13/2000 | REVISION DATE

Maximum panel assembly weight = 250 Lbs

Fixture rated capacity = 300 Lbs

Sketch of how the fixture attaches to a panel:

1) Panel & fixture in horizontal position –

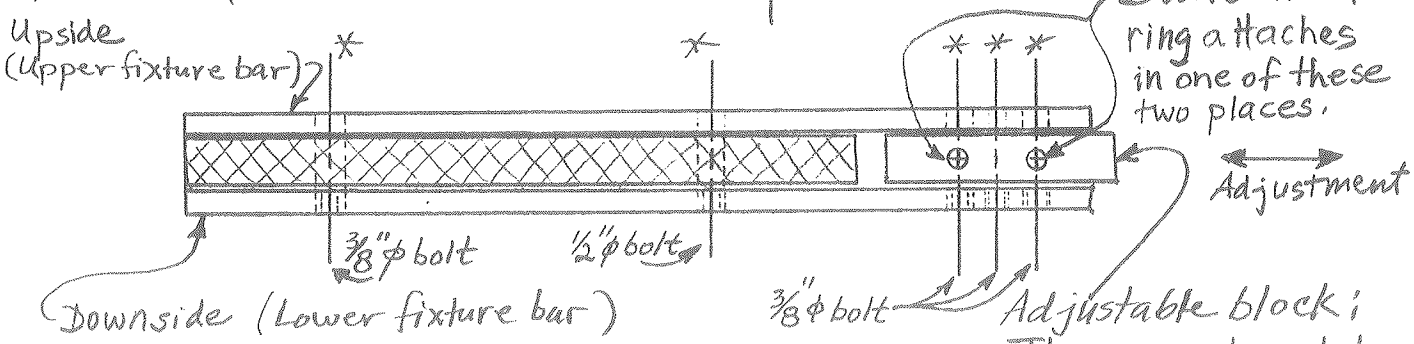

* – Bolts go through the upper fixture bar, through the panel, and screw into the lower fixture bar. The lower fixture bar has threaded inserts.

2) Panel & fixture in vertical position:

Looking at the lower fixture bar –

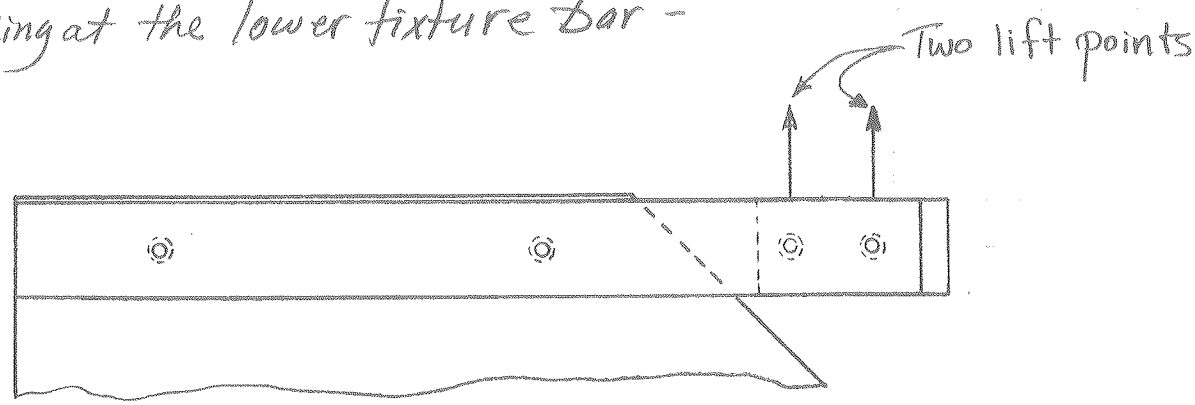

Geometric properties of fixture:

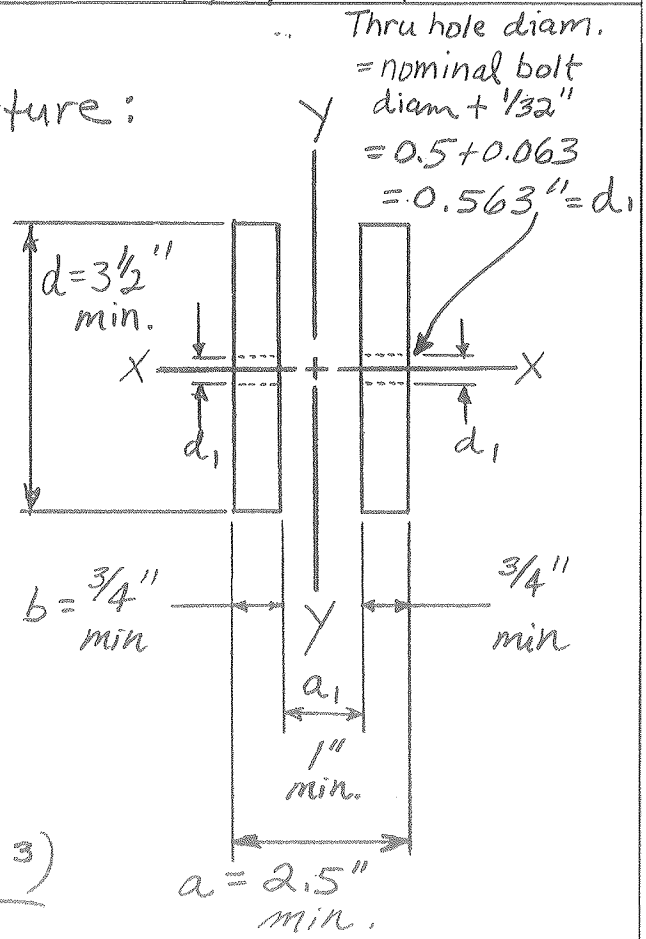

- The 2 parallel bars –

$$I_{xx} = \frac{b(d^3 - d_1^3)}{12} = \frac{(2*0.75)(3.5^3 - 0.563^3)}{12}$$

$$I_{xx} = 5.3 \text{ in}^4$$

$$S_{xx} = \frac{b(d^3 - d_1^3)}{6d} = \frac{(2*0.75)(3.5^3 - 0.563^3)}{6(3.5)}$$

$$S_{xx} = 3 \text{ in}^3$$

$$I_{yy} = \frac{d(a^3 - a_1^3)}{12} = \frac{(3.5 - .563)(2.5^3 - 1^3)}{12}$$

$$= 3.5 \text{ in}^4$$

$$S_{yy} = \frac{d(a^3 - a_1^3)}{6a} = \frac{(3.5 - .563)(2.5^3 - 1^3)}{6(2.5)} = 2.8 \text{ in}^3$$

5.1 Horizontal position -

FBD:

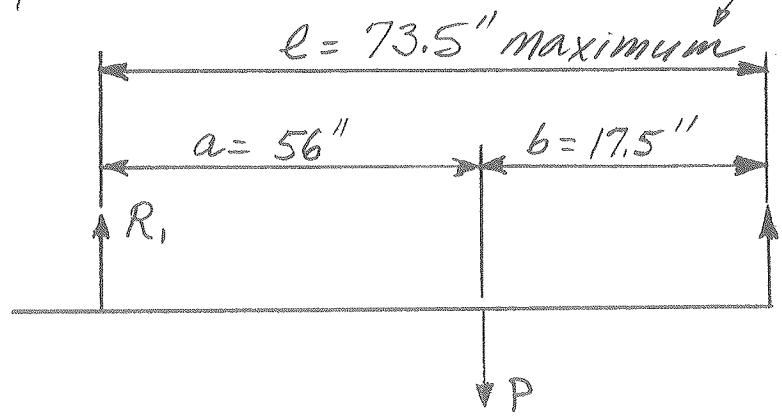

(Note b is 16.5" with adjustable block at the center of its travel range. Max travel is 1", 16.5+1 = 17.5")

- Use beam diagram # 8 in the AISC Manual of Steel Construction ASD, 9th edition: Simple beam - concentrated load at any point.

R_2 is the force applied at the swivel hoist ring.

Calculate R_2 at the time when the panel edge is lifted off of the table where it is laying horizontally:

FBD:

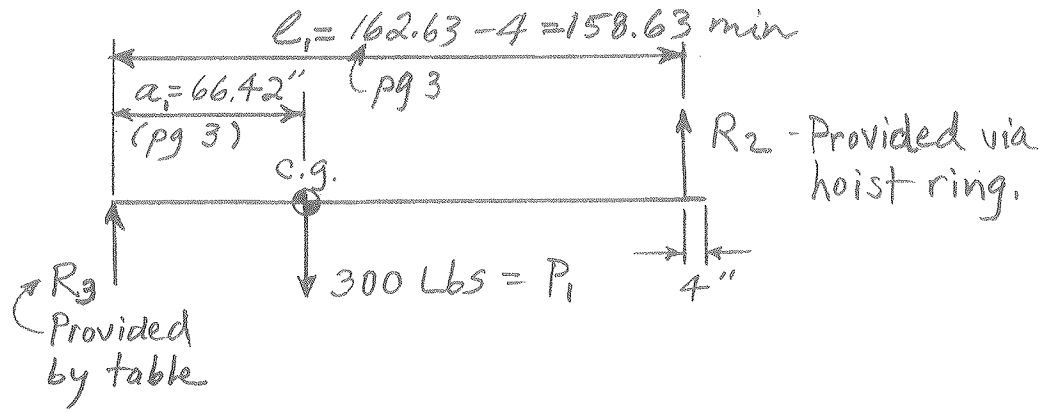

$$R_2 = \frac{P_1 a_1}{\ell_1} = \frac{300 \text{ Lbs } (66.42 \text{ in})}{158.63 \text{ in}} = 125.6, \text{ say } \underline{130 \text{ Lbs}}$$

$V_2 = R_2 = 130 \text{ Lbs}$

$$R_2 = \frac{Pa}{l} \Rightarrow \underline{\underline{P}} = \frac{l}{a} R_2 = \frac{73.5''}{56''}(130 \text{ Lbs}) = \underline{\underline{170.625 \text{ Lbs}}}$$

$$R_1 = V_1 = \frac{Pb}{l} = 170.625\left(\frac{17.5}{73.5}\right) = 40.625 \text{ Lbs}$$

$$M_{max}\ (@\ P) = \frac{Pab}{l} = \frac{170.625 \text{ Lbs}(56 \text{ in})(17.5 \text{ in})}{73.5 \text{ in}}$$

$$= 2275 \text{ in-Lbs}$$

$$f_{b_{yy}} = \frac{M}{S_{yy}} = \frac{2275 \text{ in-Lbs}}{2.8 \text{ in}^3} = 815 \text{ psi} < 11{,}600 \text{ psi}$$

$\underline{\underline{OK}}$

$$\Delta_{max} = \frac{Pab(a+2b)\sqrt{3a(a+2b)}}{27 E I_{yy} l}$$

$$= \frac{170.625 \text{ Lbs}(56 \text{ in})(17.5 \text{ in})(56+2*17.5)\text{ in}\sqrt{(3*56)(56+2*17.5)\text{ in}}}{27(10{,}000{,}000 \frac{\text{Lbs}}{\text{in}^2})(3.5 \text{ in}^4)(73.5 \text{ in})}$$

$= 0.028''$ $\underline{\underline{OK}}$

- Torsion in fixture due to ecentric lift point

M @ fixture ℄ $= 300\text{ Lbs}\left(\frac{1}{2} + \frac{3.5}{2}\right)\text{in}$
$= 675\text{ in-Lbs}$

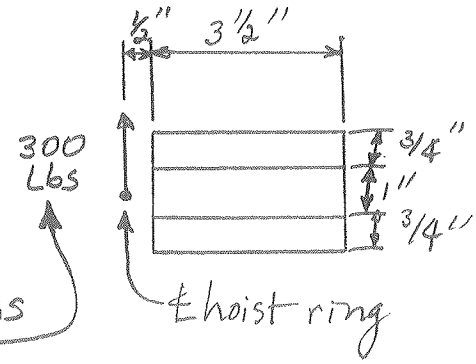

Calculate the stress and deflection using the formulas on the next page, case # 4.

▷ NOTE: This should be 130 Lbs. Fixture was tested based on this force being 130 Lbs.

Consider only one of the two 3/4" x 3 1/2" flanges:

$\therefore\ 2a = 3\tfrac{1}{2} \Rightarrow a = 1.75 \qquad \frac{b}{a} = 0.2143$
$\quad 2b = \tfrac{3}{4} \Rightarrow b = 0.375$

$$f_v\big|_{max} = \frac{675\text{ in-Lbs}\,(3)}{8(1.75\text{ in})(0.375)^2\text{ in}^2}\left[1 + 0.6095(0.2143) + 0.8865(0.2143)^2 - 1.8023(0.2143)^3 + 0.91(0.2143)^4\right]$$

$= 1{,}200\text{ psi} < 5{,}800\text{ psi}$ ok

Calculate the angle of twist:

$$K = 1.75\text{ in}(0.375)^3\text{ in}^3\left[\frac{16}{3} - 3.36(0.2143)\left(1 - \frac{0.375^4}{12(1.75)^4}\right)\right] = 0.43\text{ in}^4$$

$$\theta\,[\text{radians}] = \frac{TL}{KG} = \frac{675\text{ in-Lbs}\,(73.5\text{ in})}{0.43\text{ in}^4\,(3.8\times10^6\ \text{Lbs/in}^2)} = 0.03\text{ radians}$$
$= 1.75°$ ok

GENERAL FORMULAS: $\theta = TL/KG$ and $\tau = T/Q$, where θ = angle of twist (radians); T = twisting moment (force-length); L = length, τ = unit shear stress (force per unit area); G = modulus of rigidity (force per unit area); K (length to the fourth) and Q (length cubed) are functions of the cross section

Form and dimensions of cross sections, other quantities involved, and case no.	Formula for K in $\theta = \frac{TL}{KG}$	Formula for shear stress
1. Solid circular section 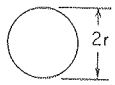	$K = \frac{1}{2}\pi r^4$	Max $\tau = \frac{2T}{\pi r^3}$ at boundary
2. Solid elliptical section 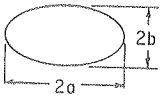	$K = \frac{\pi a^3 b^3}{a^2 + b^2}$	Max $\tau = \frac{2T}{\pi a b^2}$ at ends of minor axis
3. Solid square section	$K = 2.25a^4$	Max $\tau = \frac{0.601T}{a^3}$ at midpoint of each side
4. Solid rectangular section 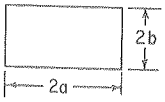	$K = ab^3\left[\frac{16}{3} - 3.36\frac{b}{a}\left(1 - \frac{b^4}{12a^4}\right)\right]$ for $a \geq b$	Max $\tau = \frac{3T}{8ab^2}\left[1 + 0.6095\frac{b}{a} + 0.8865\left(\frac{b}{a}\right)^2 - 1.8023\left(\frac{b}{a}\right)^3 + 0.9100\left(\frac{b}{a}\right)^4\right]$ at the midpoint of each longer side for $a \geq b$
5. Solid triangular section (equilateral) 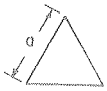	$K = \frac{a^4\sqrt{3}}{80}$	Max $\tau = \frac{20T}{a^3}$ at midpoint of each side
6. Isosceles triangle 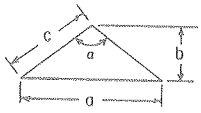 Note: See also Ref. 21 for graphs of stress magnitudes and locations and stiffness factors)	For $\frac{2}{3} < a/b < \sqrt{3}$ $(39° < \alpha < 82°)$ $K = \frac{a^3b^3}{15a^2 + 20b^2}$ approximate formula which is exact at $\alpha = 60°$ where $K = 0.02165c^4$ For $\sqrt{3} < a/b < 2\sqrt{3}$ $(82° < \alpha < 120°)$ $K = 0.0915b^4\left(\frac{a}{b} - 0.8592\right)$ approximate formula which is exact at $\alpha = 90°$ where $K = 0.0261c^4$ (errors < 4%) (Ref. 20)	For $39° < \alpha < 120°$ $Q = \frac{K}{b[0.200 + 0.309a/b - 0.0418(a/b)^2]}$ approximate formula which is exact at $\alpha = 60°$ and $\alpha = 90°$ For $\alpha = 60°$ $Q = 0.0768b^3 = 0.0500c^3$ For $\alpha = 90°$ $Q = 0.1604b^3 = 0.0567c^3$ Max τ at center of longest side
7. Circular segmental section 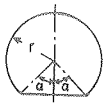 Note: $h = r(1 - \cos\alpha)$]	$K = 2Cr^4$ where C varies with $\frac{h}{r}$ as follows. For $0 \leq \frac{h}{r} \leq 1.0$: $C = 0.7854 - 0.0333\frac{h}{r} - 2.6183\left(\frac{h}{r}\right)^2 + 4.1595\left(\frac{h}{r}\right)^3 - 3.0769\left(\frac{h}{r}\right)^4 + 0.9299\left(\frac{h}{r}\right)^5$	Max $\tau = \frac{TB}{r^3}$ where B varies with $\frac{h}{r}$ as follows. For $0 \leq \frac{h}{r} \leq 1.0$: $B = 0.6366 + 1.7598\frac{h}{r} - 5.4897\left(\frac{h}{r}\right)^2 + 14.062\left(\frac{h}{r}\right)^3 - 14.510\left(\frac{h}{r}\right)^4 + 6.434\left(\frac{h}{r}\right)^5$ (Data from Refs. 12 and 13)

Pg 15
3/16/2000

Reference: Roark's Formulas for Stress & Strain
6th Edition

This twisting moment, 675 in-Lbs, will be resisted by the honeycomb panel. Check the bending stress in the panel.

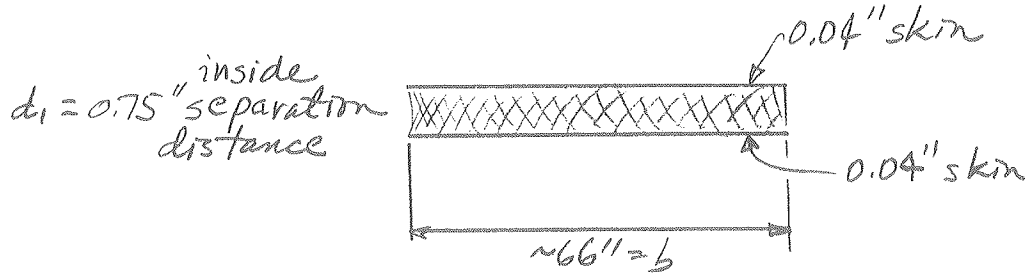

$$d = 0.75 + .04 + .04 = 0.83''$$

$$I = \frac{b(d^3 - d_1^3)}{12} = \frac{66(0.83^3 - 0.75^3)}{12} = 0.82 \text{ in}^4$$

$$S = \frac{66(0.83^3 - 0.75^3)}{6(0.83)} = 2 \text{ in}^3$$

$$f_b = \frac{M}{S} = \frac{675 \text{ in-Lbs}}{2 \text{ in}^3} = 340 \text{ psi} < 5{,}700 \text{ psi} \quad \underline{\underline{OK}}$$

The skins are 3003-H14 aluminum alloy.

$$\therefore F_b = \frac{F_y}{3} = \frac{17{,}000}{3} = 5{,}700 \text{ psi}$$

- Bolts

Size 3/8-16 UNC Grade 5 (Assume all bolts are 3/8" ϕ.)

Tensile stress area = 0.0775 in^2

Thread root area = 0.0678 in^2

- Check bolt shear stress —

Maximum bolt shear stress:

Horizontal shear force along beam where V_1 acts

$$= \frac{Vay}{I_{yy}} \quad \frac{40.625 \text{ Lbs} \left[(3.5 * 0.75)\cancel{in^2} + (0.5 + \frac{0.75}{2})\cancel{in}\right] \cancel{in}}{3.5 \text{ in}^{\cancel{4}}}$$

$= 27$ Lbs/in Total shear force $= 27 \frac{\text{Lbs}}{\cancel{in}}(56 \cancel{in}) = 1{,}500$ Lbs

Horizontal shear force along beam where V_2 acts

$$= 27\left(\frac{130}{40.625}\right) = 86.4 \text{ Lbs/in}$$

Total shear force $= 86.4 \frac{\text{Lbs}}{\cancel{in}}(17.5 \cancel{in}) = 1{,}500$ Lbs

Size the two bolts that hold the panel to the fixture to transfer the horizontal shear force along the beam where V_1 acts:

Force/bolt = 1,500/2 = 750 Lbs

$$f_v = \frac{750 \text{ Lbs}}{0.0678 \text{ in}^2} = 11{,}065 \text{ psi} < 14{,}000 \text{ psi } \underline{\underline{OK}}$$

Check bolt tensile stress —

SAE Grade 5 threaded fasteners have the same proof load, yield strength and tensile strength as A325 bolts. ∴ Calculate the allowable tension stress using the formula in Table J3.3.

$$F_t = \sqrt{(28)^2 - 4.39 f_v^2}$$

$$= \sqrt{28^2 - 4.39(11.065)^2} = 15.7 \text{ ksi}$$

Maximum bolt tensile load = 40.625 Lbs

$$f_t = \frac{170.625 \text{ Lbs}}{0.0775 \text{ in}^2} = 2{,}200 \text{ psi} < 15{,}700 \text{ psi } \underline{OK}$$

- Size the two bolts that hold the adjustable block in place between the two 5/8"x3" flanges.

These two bolts transfer the same horizontal shear force as the two bolts in the previous calculation. So, these two bolts are ok for the shear force.

$$f_t = \frac{170.625 \text{ Lbs}}{0.0775 \text{ in}^2} \rightarrow 2{,}200 \text{ psi} < 15{,}700 \text{ psi} \quad \underline{\underline{OK}}$$

These two bolts clamp the adjustable block in place between the two flanges. The bolts pass through long slotted holes in the block. The two flanges do not have slotted holes.

Estimate the slip critical load:

Follow the AISC for A325 bolts since they are very similar to SAE Grade 5 bolts as discussed on the previous page. The calculation procedure is in the Specification for Structural Joints Using ASTM A325 or A490 Bolts.

From pg 5-270 in the AISC Code,

$P_s \equiv$ Allowable resistance to slip.

$$P_s = F_s A_b N_b N_s$$

$A = \pi (3/8")^2/4 = 0.11 \text{ in}^2$ (Nominal bolt body area)
$N_b = 2$ (bolts in the joint)
$N_s = 2$ (number of slip planes)

F_s:

The AISC code has F_s values in Table 3 on page 5-271.

Calculate an F_s value for the aluminum block slipping on the two aluminum flanges as discussed in paragraph 3.(b)(3) on page 5-267 in the AISC code.

$$\text{Allowable slip load per unit area for aluminum joint} = \frac{\text{Allowable slip load per unit area from AISC Table 3 for Class A coatings} \times \text{Aluminum joint slip coefficient}}{0.33}$$

$F_s\big|_{\text{steel joint}} = 10{,}000$ psi for Class A contact surface, A325 bolts, and long slots with parallel loading.

Aluminum joint slip coefficient = 0.09 to 0.13
Reference: Aluminum Design Manual, 6th Ed, Oct 1994

$$F_s\big|_{\text{Aluminum joint}} = 10{,}000 \text{ psi} \left(\frac{0.1}{0.33}\right) = 3{,}000 \text{ psi}$$

$$\therefore P_s = 3{,}000 \frac{\text{Lb}}{\text{in}^2} * 0.11 \text{ in}^2 * 2 * 2 = 1{,}320 \text{ Lbs}$$

Panel weight = 300 Lbs < 1,320 Lbs <u>OK</u>

This is a conservative comparison because the full panel weight is never applied parallel to the slots.

5.2 Vertical position

FBD:

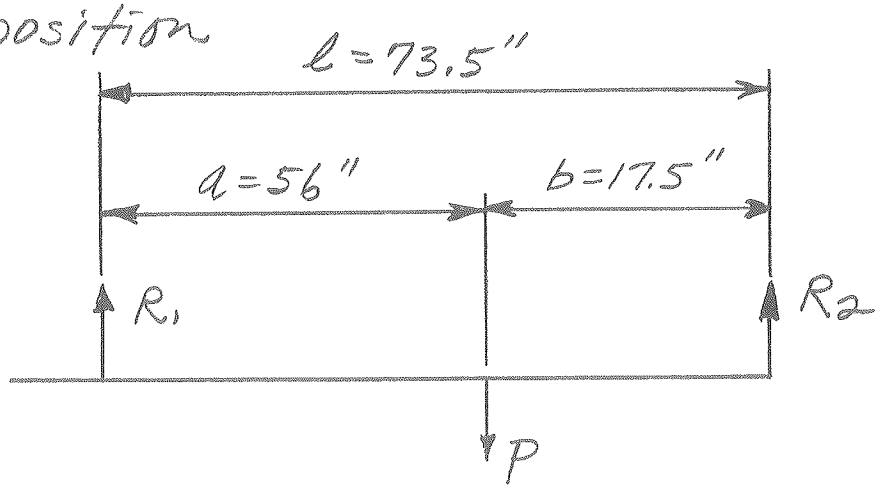

- Use beam diagram #8 in the AISC Manual: Simple beam - concentrated load at any point.

R_2 is the force applied at the swivel hoist ring.

$R_2 = 300$ Lbs with the fixture holding the panel in the vertical position

R_2 is adjusted to be in-line with the panel c.g.

$V_2 = R_2 = 300 \text{ Lbs} = Pa/l \Rightarrow P = R_2 l/a$

$P = R_2 l/a = 300 \text{ Lbs}(73.5)/56 = 395 \text{ Lbs}$

$R_1 = V_1 = Pb/l = 395(17.5)/73.5 = 95 \text{ Lbs}$

$$M_{max}(@P) = \frac{Pab}{l} = \frac{395 \text{ Lbs}(56 \text{ in})(17.5 \text{ in})}{73.5 \text{ in}} = 5{,}270 \text{ in-Lbs}$$

$$f_{bxx} = \frac{M}{S_{xx}} = \frac{5{,}270 \text{ in-Lbs}}{3 \text{ in}^3} = 1{,}760 \text{ psi} < 11{,}600 \text{ psi } \underline{\underline{OK}}$$

$$f_v = \frac{V_2}{A_v} = \frac{300 \text{ Lbs}}{2((3\tfrac{1}{2} - 0.563)0.75)\text{ in}^2} = 70 \text{ psi} < 5{,}800 \text{ psi } \underline{\underline{OK}}$$

$$\Delta max = \frac{Pab(a+2b)\sqrt{3a(a+2b)}}{27EI_{xx}l}$$

$$= \frac{395\,\cancel{Lbs}(56\,\cancel{in})(17.5\,\cancel{in})(56+2*17.5)\,in\sqrt{3(56)\,\cancel{in}(56+2*17.5)}}{27(10{,}000{,}000\,\frac{Lbs}{in^2})(5.3\,\cancel{in^4})(73.5\,\cancel{in})}$$

$$= 0.042''$$

$$\Delta a\ (@P) = \frac{Pa^2b^2}{3EI_{xx}l} = \frac{395\,\cancel{Lbs}(56)^2\,\cancel{in^2}(17.5)^2\,in^{\cancel{2}}}{3(10{,}000{,}000\,\frac{Lbs}{in^2})(5.3\,\cancel{in^4})(73.5\,\cancel{in})}$$

$$= 0.033''\ \text{OK.}$$

Increase the depth from 3" to 4" and recalculate Δa:

$$I_{xx} = \frac{(2*0.75)(4^3-0.563^3)}{12} \quad \text{(from page 11)}$$

$$= 8\ in^4$$

$$\Delta a\ (@P) = 0.033\left(\frac{5.3}{8}\right) = 0.022''$$

Continue using the 3½" dimension in the calcs.

- Bearing stress of bolt on the aluminum flange:

A_b = Bearing area = bolt nominal diameter * bearing length for each bolt = 0.375 in (3/4 in) = 0.28 in^2

$$f_p = \frac{P}{A_b} = \frac{395\ Lbs}{0.28\ in^2} = 1{,}410\ psi < 18{,}600\ psi\ \underline{OK}$$

Use only one bolt in the calc.

- Shear tearout:

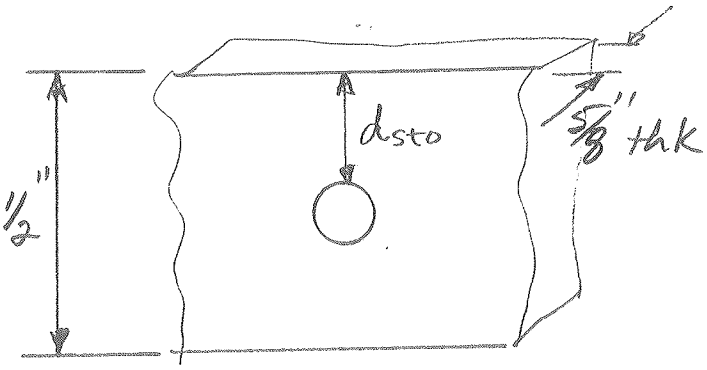

$$d_{sto} = \frac{3.5 - 0.563}{2} = 1.4''$$

$$f_{sto} = \frac{P}{A_{sto}} = \frac{395 \text{ Lbs}}{2(1.4)(0.75)\text{ in}^2}$$

$$= 190 \text{ psi} < 5{,}800 \text{ psi}$$

- Check edge distances:

1/2" bolt –

Minimum required distance from the center of the bolt to the edge = 2 * 0.5 = 1"

$$\frac{3.5}{2} = 1.75'' > 1'' \quad \underline{OK}$$

3/8" bolt –

$$2 \times 0.375 = 0.75'' < 1.75'' \quad \underline{OK}$$

6. SUBJECT: Check bearing stress & shear tearout stress in the honeycomb panel

NAME: AMS

DATE: 3/15/2000 | REVISION DATE:

Use actual panel weight of 250 Lbs.

Skin material: Aluminum alloy 3003 H14

Skin thickness = 0.04"

- Bearing

$F_{by} = 25{,}000$ psi

Allowable bearing stress on rivets and bolts $= \frac{F_{by}}{3} = \frac{25{,}000}{3} = 8{,}300$ psi

#1. Bearing area = nominal bolt diameter × bearing length
= 0.5" (0.04")
= 0.02 in²

250(73.5/56) = P (page 18)

$f_p = \frac{P}{A_p} = \frac{330 \text{ Lbs}}{2(0.02 \text{ in}^2)} = 8{,}250 \text{ psi} < 8{,}300 \text{ psi}$ OK

#2 Bearing area = 0.375" (0.04") = 0.015 in²

330 (17.5/73.5) = P (page 18)

$f_p = \frac{80 \text{ Lbs}}{2(0.015 \text{ in}^2)} = 2{,}700 \text{ psi} < 8{,}300 \text{ psi}$ OK

- Shear tearout

d_{sto} = 1.4" minimum, assuming the edge of the fixture lines up with the edge of the panel.

$f_{sto} = \frac{300 \text{ Lbs}}{2(1.4 \times 0.04) \text{ in}^2} = 2{,}700$ psi

$F_v = F_y/(3 \cdot 2) = 16{,}000/6 = 2{,}700 \text{ psi} \doteq 2{,}700$ psi OK

7. SUBJECT: Adjustable block

NAME: AMS

DATE: 3/16/2000 | REVISION DATE

Sketch

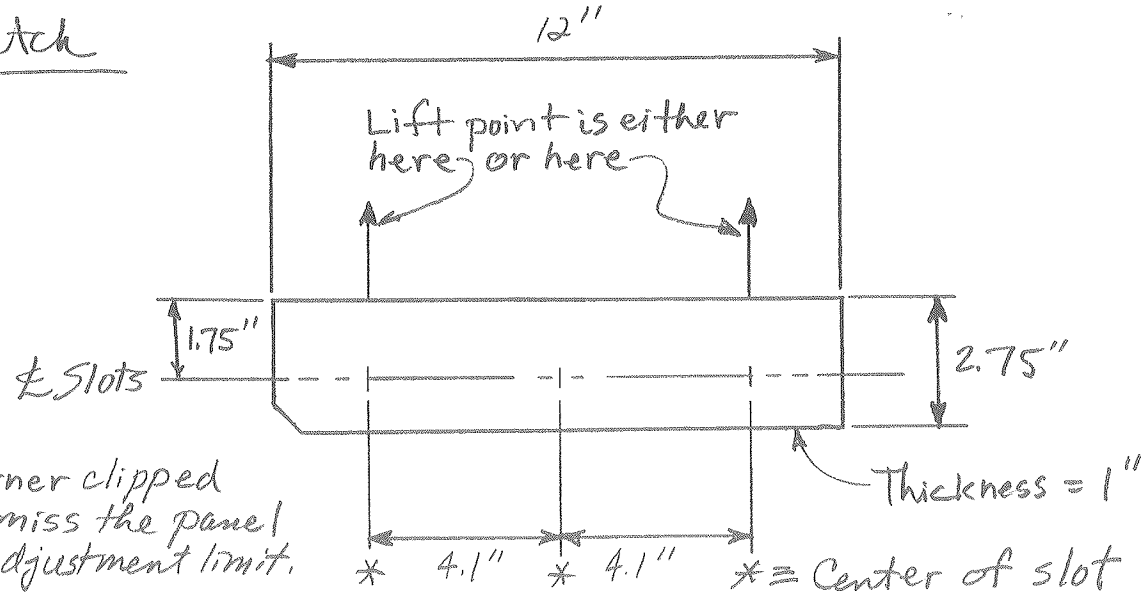

Slot dimensions:

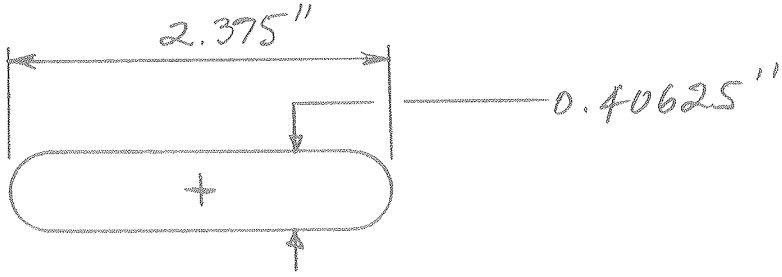

The load is taken by the 3/8" ϕ bolt bearing on the slot.

Shear tearout:

$d_{sto} = 1.75'' - 0.40625''/2 \doteq 1.5''$

$f_{sto} = \frac{P}{A_{sto}} = \frac{300 \text{ Lbs}}{2(1.5 * 1)\text{in}^2} = 100 \text{ psi} < 5{,}800 \text{ psi}$ OK

Bearing:

$f_p = \frac{P}{A_p} = \frac{300 \text{ Lbs}}{(0.375 * 1)\text{in}^2} = 800 \text{ psi} < 12{,}400 \text{ psi}$ OK

Tension: Assume the area is the same as the bearing area.

$$f_t = \frac{P}{A} = \frac{300}{0.375 in^2} = 800 \text{ psi} < 11,600 \text{ psi } \underline{OK}$$

Bending of the material under the slot:

Material thickness under the slot $= 2.75 - 1.75 - 0.40625/2$
$= 0.79''$

$$I = \frac{bd^3}{12} = \frac{1(0.79)^3}{12} = 0.041 in^4$$

$$S = \frac{bd^2}{6} = \frac{1(0.79)^2}{6} = 0.104 in^3$$

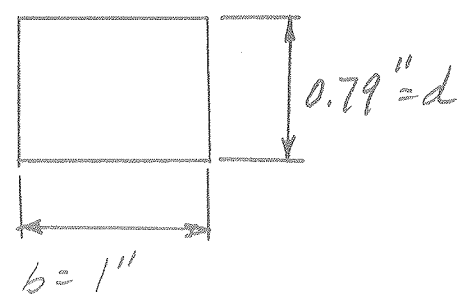

$R = V = P/2 = 300/2 = 150$ Lbs

$$M_{max}(\text{at } P) = \frac{Pl}{4} = \frac{300 \text{ Lbs}(2.375 in)}{4}$$

$$= 180 \text{ in-Lbs}$$

FBD:

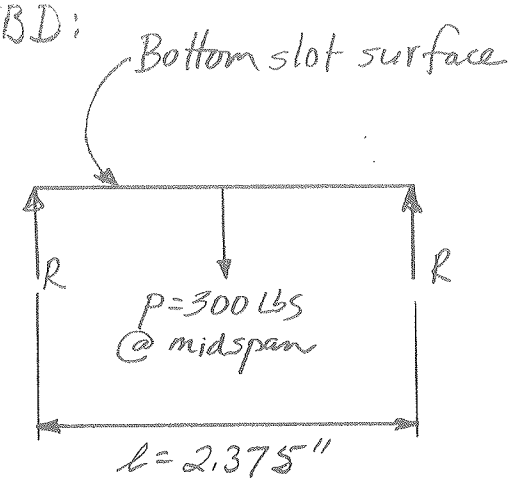

$$f_b = \frac{M}{S} = \frac{180 \text{ in-Lbs}}{0.104 in^3} = 1,730 \text{ psi}$$
$< 11,600$ psi $\underline{OK}$

$$f_v = \frac{V}{A} = \frac{150 \text{ Lbs}}{(1 \times 0.79) in^2} = 190 \text{ psi} < 5,800 \text{ psi } \underline{OK}$$

$$\Delta_{max}(\text{at } P) = \frac{Pl^3}{48EI} = \frac{300 \text{ Lbs}(2.375^3) in^3}{48(10,000,000 \text{ Lbs/in}^2)(0.041 in^4)}$$
$= 0.0002''$ $\underline{OK}$

FERMILAB ENGINEERING NOTE	SECTION	PROJECT	SERIAL-CATEGORY	PAGE 1 of 2

SUBJECT: Lifting fixture for unloaded MDT panels - Fixture #113

NAME: AMS

DATE: 3/28/2000

REVISION DATE:

Load Test #1 - Top lift point

Test Load = 500 Lbs

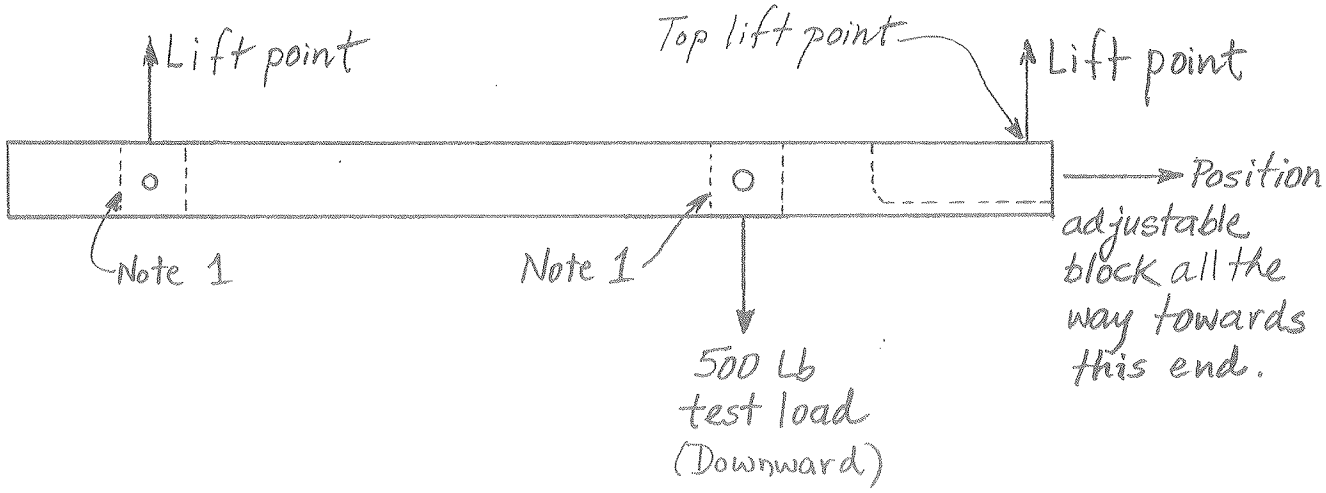

Notes

1) Add spacer that has same thickness as adjustable block. Tap spacer for lift point or test load. Bolt spacer into place.

2) All bolts shall be Grade 5 minimum.

3) Install all three bolts in the adjustable block.

SUBJECT: Lifting fixture for unloaded MDT panels - Fixture #113

NAME: AMS

DATE: 3/28/2000

REVISION DATE:

Load Test #2 - Side lift point

Test Load = 200 Lbs

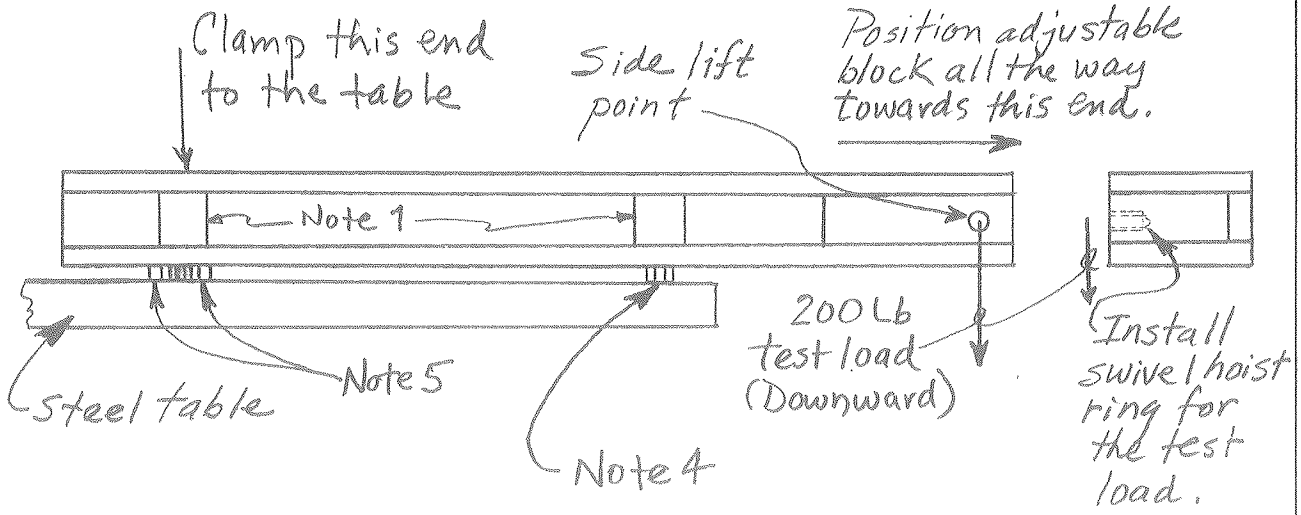

Notes

1) Use spacers from Load Test #1.
2) All bolts shall be Grade 5 minimum.
3) Install all three bolts in the adjustable block.
4) Bolt head is free to rock on the table top.
5) Bars to keep this end from rocking. (Bolt head is shaded.)