BELOW-THE-HOOK LIFTING DEVICE
Engineering Note Cover Page

Lifting Device Numbers:

FNAL Site No.:_____ if applicable Div. Specific No.: 112 if applicable Asset No. _____ if applicable

ASME B30.20 Group: (check one)
- ˇ Group I — Structural and Mechanical Lifting Devices
- ˇ Group II — Vacuum Lifting Devices
- ˇ Group III — Magnets, Close Proximity Operated
- ˇ Group IV — Magnets, Remote Operated

Device Name or Description: D0 MDT C subassembly Lifting Fixture

Device was: (check all applicable)
- ˇ Purchased from a Commercial Lifting Device Manufacturer
  mfg. name: _____
- ˇ Designed and Built at Fermilab
- ˇ Designed by Fermilab and Built by a Vendor
  Assy drawing number: 3823.113-MD-386270
- ˇ Provided by a User or Other Laboratory
- ˇ Other. Describe: _____

Engineering Note Prepared by: EDWARD CHI Date: 3/22/00

Engineering Note Reviewed by: RAFAEL SILVA Date: 04/11/00

Lifting Device Data:

Capacity: 900 lbs.

Fixture Weight: 100 lbs.

Service: ˇ normal ˇ heavy ˇ severe (refer to B30.20 for definitions)

Duty Cycle: _____ 8, 16 or 24 hour rating (applicable to groups III, and IV)

Inspections Frequency: _____

Rated Load Test by FNAL (if applicable): Date: 4-17-00 Load: 1,000 lbs

ˇ Check if Load Test was by Vendor and attach the certificate.

Satisfactory Load Test Witnessed by: _____ 8959

Signature (of Load Test Witness): _____

Notes or Special Information:

Fermilab

D0 MDT C SUB-OCTANT LIFTING FIXTURE

Designer: Tony Levand

Author: Edward Chi
PPD/ETT/D-Zero Upgrade Group

March 22, 2000

Reviewer:

Approver:

CONTENTS

1. Weight Calculations 1-1

2. Structural Analysis and Calculations For Lifting Fixture 2-1

3. Flat Plate Fittings- Unitstrut #P1925 3-1

4. Appendix

Copies of Related Drawings, Specifications and References

FERMILAB ENGINEERING NOTE	SECTION MDT C Layer	PROJECT Upgrade	SERIAL-CATEGORY	PAGE 1.1
SUBJECT MDT C Suboctant lifting Fixture weight calculations		NAME E. CHI		
		DATE 3-14-00	REVISION DATE	

Ref. drawings:

MD-386270

Ref:

UNISTRUT Metal Framing #12

Ryerson Stock list. 91 edition

Fig 1.1

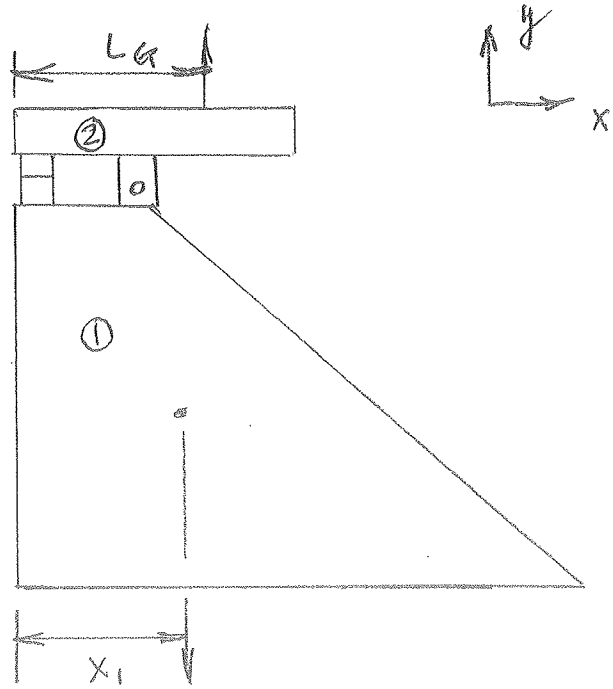

Ref. to Fig 1.1

Where ① Represents MDT C Sub octant with Strong back frame

② Represents the lifting fixture for MDT C octant w/s.b. frame.

The Eng. Note is an Analysis & Calculation for the lifting Fixture (item ②) which will be used to lift item ① per spec. ASME B30.20-1993.

FERMILAB ENGINEERING NOTE	SECTION MDT C layer	PROJECT Doupgrade	SERIAL-CATEGORY	PAGE 1-2
SUBJECT: weight cal. & center gravity (x)		NAME: E. CHI		
		DATE: 3-14-00	REVISION DATE	

Per drawing MD-386270.

For 6"x2"x3/16" STL. tube:

$$W_{tube} = 96/12 \cdot Ft \times 9.42\#/Ft$$
$$= 76\#$$

For P1000 unistrut

$$W_{strut} = 96/12 \cdot Ft \times 1.90\#/Ft$$
$$= 15\#$$

For plates:

$$W_{plt} = 0.2833\# in^{-3} \times [2\times(4.5\times3.5\times0.25) + 2\times(3\times4\times0.25) + (3\times3.5\times1.12) + (4.875\times1.625\times0.25)]$$
$$\cong 0.2833\# in^{-3} \times 27$$
$$= 8\#$$

$$W_{for\ item\ 2} = W_{tube} + W_{STR.} + W_{plt}$$
$$\cong 100\#$$

x direction center gravity:

Per Fig 1-1 of Page 1-1

x_1: center gravity dist. in x direction for item ① $x_1 = 81$ in.

x_2: center gravity dist. in x direction for item ② $x_2 = 48$ in

$$\bar{x} = \frac{x_1 \cdot W_{①} + x_2 \cdot W_{②}}{W_{①} + W_{②}}$$

$$= \frac{81 \text{ in} \times 900^{\#} + 48 \text{ in} \times 100^{\#}}{1000^{\#}}$$

$$= 77.7 \text{ in} = L_G$$

SUBJECT: MDT C.- lifting Fixture Structural Analysis & Cal.

NAME: E. CHI

DATE: 3-15-00 | REVISION DATE:

Fig 2.1

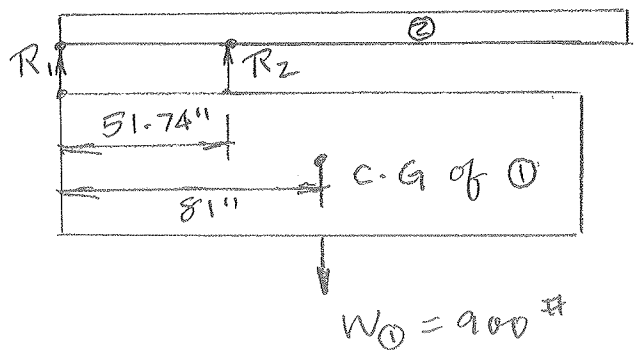

Fig 2-1 is simplized force dist. model for Fig 1.1.

where $R_2 + R_1 = W_① = 900^{\#}$

$$R_2 = \frac{W_① \cdot 81''}{51.74''}$$

$$= 1{,}409^{\#} \downarrow$$

$$R_1 = \frac{(81'' - 51.74'') \cdot 900^{\#}}{51.74''}$$

$$= 509^{\#} \uparrow$$

SUBJECT: Allowable Stresses

NAME: E. CHI

DATE: 3-15-00 | REVISION DATE:

For Rectangular Tube: $F_Y = 46$ KSI

2"x6"x3/16. ASTM A500

For unistrut: $F_Y = 33$ KSI. per ASTM, GR33 FOR P1000 STEEL.

For plate: ASTM A36. $F_Y = 36$ KSI
$F_U = 58$ KSI

Per SECTION 20-1.2.2, ASME B30.20-1993

$$F_v = F_b = F_t = F_y/3.0$$

$\Rightarrow$ $F_v = F_b = 46\text{ KSI}/3.0 = 15.33$ KSI FOR Tube.

$F_v = F_b = 36\text{ KSI}/3.0 = 12$ KSI For plate

$F_v = F_b = 33\text{ KSI}/3.0 = 11$ KSI FOR UNISTRUT

Allowable Bearing @ bolt holes:

$$F_p = F_v = F_b = 12 \text{ KSI}$$

Allowable Bearing load:

$$P_p = A_{project} \times F_p$$

Allowable weld STRESS:

Per SECTION. 20-1.2.2 (a), ASME B30.20-1993

Conservatively assuming all Allowable STRESS on fillet welds $F_w = F_v = F_b = F_t = 12$ KSI For E70XX

~~FOR UNISTRUT - $F_{w_u} = 11$ KSI~~

Check plate. item #1 per drawing MD-386270.

* item #1 acting as lifting lug for MDT C layer octant.

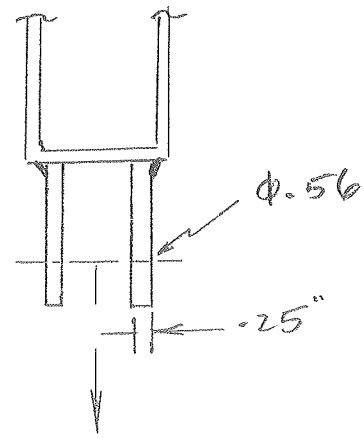

Fig. 2.2

The Bearing force @ the hole of the plate:

$P_{hole} = R_2/2$

$= 1,409/2$

$= 705^{\#}$

$P_p = A_{project} \times F_p$

$= 0.25\ in \times 0.5625\ in \times 12,000^{\#}\ in^{-2}$

$= 1,687^{\#}$

$\therefore P_{hole} = 705^{\#} < P_p = 1,687^{\#}$

the Bearing load for plate is ok

The Tensional stress:

$f_t = R_2 / Area_{cross\text{-}section\ (Net)}$

$f_{t_1} = 1,409\#/4.5\,in \times 0.25\,in \times 2$

$= 0.627$ KSI

$f_{t_2} = 3 f_{t_1} = 1.881$ KSI $< F_t = 12$ KSI *

weldment:

per dwg. MD-386270
Assuming weld size $C_w = 0.1875$ in.

then the weld force subject to the weldment: (Allowable)

$P_w = 0.1875'' \times 0.707 \times 4.50'' \times 12,000\#\,in^{-2} \times 2$

$= 14,316\#$ > apply force $= 705\#$

∴ the weld is ok

* Per eq (6-3), section 6.3 of "mechanical Eng. Design" 2nd Edition by J. Shigley
where $\sigma_{max} = 3\sigma_0$

Assuming $K_t = 3$ for stress concent. factor.

FERMILAB ENGINEERING NOTE | SECTION | PROJECT | SERIAL-CATEGORY | PAGE 2.5
SUBJECT | NAME E. CHI | DATE | REVISION DATE

Check the Rectangular Tube & UNISTRUT:

Assuming lifting the MDT C Suboctant w/ STRONG back frame @ the location of

$\bar{X} = 77.7$ in (see page 1.3)

Ref to Fig 2.1 of page 2.1

We can model the lifting Fixture as showing in Fig 2.3: Simple Beam support, concentrated load at any point

where

$P = R_2 + W_{②}$ (see page 1.2 & 2.1)

$= 1{,}409^{\#} + 100^{\#}$

$= 1{,}509^{\#} \downarrow$

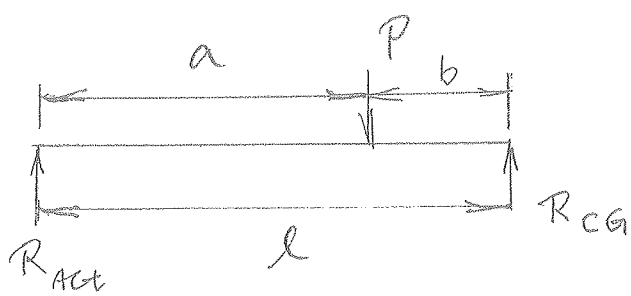

Fig 2.3

$R_{Act} = R_1$

$= 509^{\#} \uparrow$ (see page 2.1)

$R_{C.G} = W_{①} + W_{②}$ (see page 1.3)

$= 1{,}000^{\#} \uparrow$

where

$a = 51.74$ in (see dwg. MD-386270)

$b = l - a = 25.96$ in

$l = 77.7$ in

$$M_{max} = \frac{Pab}{l}$$

$$= \frac{1509^{\#} \times 51.74 \text{ in} \times 25.96 \text{ in}}{77.7 \text{ in}}$$

$$= 26{,}086^{\#} \text{ in}$$

Find out the geometrical property of the combination of Rectangular Tube 6" x 2" x 3/16" and unistrut P1000.

FOR 6"x2"x$\frac{3}{16}$" tube: $I_{z1} = 11.1 \text{ in}^4$, $S_{z1} = 3.70 \text{ in}^3$

$A_1 = 2.77 \text{ in}^2$

P1000 unistrut: $I_{z2} = 0.185 \text{ in}^4$, $S_{z2} = 0.202 \text{ in}^3$

$A_2 = 0.556 \text{ in}^2$

The Combination:

$$\Sigma I_z = \Sigma I_i + \Sigma \delta d_i^2 A_i^2$$

$$= 17.6558 \text{ in}^4$$ (see page 2.15)

For a conservative and simple approach, assuming.

$$\Sigma I_z = I_{z1}$$
$$= 11.4 \text{ in}^4$$

$$S_z = S_{z1} = 3.70 \text{ in}^3$$

$$A = A_1 = 2.77 \text{ in}^2$$

$$f_b = M_{max} / S_z$$

$$= 26{,}086 \text{ \#}\cdot\text{in} / 3.70 \text{ in}^3$$

$$= 7.050 \text{ KSI} < F_b = 11 \text{ KSI} \quad < F_b = 15.33 \text{ KSI}^*$$
(FOR UNISTRUT) (FOR TUBE)

$$f_v = 1{,}000 \text{ \#} / A$$

$$= .361 \text{ KSI} < F_{v\,\text{UNISTRUT}} = 11 \text{ KSI} < F_{b\,\text{TUBE}} = 15.33 \text{ KSI}^*$$

* Also applying "SPEC. B5, Table B5.1 of CHAPTER B.
SPEC. F3.1, F3.2 of AISC 9th Ed."

To select the smallest value of F_b & F_v

For Rectangular 6" x 2" x 3/16" STL. Tube

$b = 2" - 3 \times 3/16"$ (Per B5 of AISC)

$= 1.4375"$

$d = 6"$

$t_w = t_f = 0.1875"$

$F_y^{1/2} = 46^{1/2}$ KSI

$= 6.782$

$b/t = 1.4375/0.1875$ Per Table B5.1 of AISC.

$= 7.67 < 190/F_y^{1/2} = 28$

$d/b = 6/1.4375 = 4.174 < 6$

$t_f/t_w = 1.0 < 2.0$

Also.

$\because M_1 = M_2 = 0$ (see Fig 2-3 of Page 2-5)

$L_b = 77.7$ in

$L_c = (1{,}950 + 1{,}200 \frac{M_1}{M_2}) \frac{b}{F_y}$

FERMILAB ENGINEERING NOTE | SECTION | PROJECT Pdupgrade | SERIAL-CATEGORY | PAGE 2.9
SUBJECT | NAME E. CHI | DATE | REVISION DATE

$$L_c = (1{,}950 + 0) \times \frac{1.4375}{46}$$

$$= 60.94 < L_b$$

Per eq F3-2, SECTION F3.1 of AISC

$$F_{b_t} = 0.60\, F_Y = 0.60 \times 46 \text{ ksi}$$

$$= 27.6 \text{ ksi}$$

Per eq F3-3. & F3.2 of AISC

$$h = d - 2t_f$$

$$= 6'' - 2 \times 0.1875''$$

$$= 5.625''$$

$$h/t_w = \frac{5.625''}{0.1875''}$$

$$= 30 < 380/\sqrt{F_y} = 56$$

$$\therefore\ F_{v_t} = 0.40\, F_Y$$

$$= 18.4 \text{ ksi}$$

Per eq F4-1, & F4 of AISC

For P1000 UNISTRUT Channel, Steel ASTM A570 GR33

$t_w = t_f = 0.105''$

$b = 1.625'' - 3 \times 0.105''$

$= 1.31$ in

$d = 1.625''$

$b/t = 1.31/0.105$

$= 12.5 < 190/F_Y^{1/2} = 33$ where $F_Y = 33$ KSI

$d/b = 1.625''/1.31''$

$= 1.24 < 6$

$t_f/t_w = 1.0 < 2.0$

$L_c = (1{,}950 + 1{,}200 \cancel{\frac{M_1}{M_2}}^{\,1.0}) \frac{b}{F_Y}$

$= 1{,}950 \times \frac{1.31}{33}$

$= 77.4 < L_b = 77.7$

∴ Treated as "Members with Noncompact Section"

FERMILAB ENGINEERING NOTE	SECTION	PROJECT	SERIAL-CATEGORY	PAGE
		Doupgrade		2.11.

SUBJECT	NAME	
	E. CHI	
	DATE 2-17-00	REVISION DATE

Per eq. F3-3, §F3.2 of AISC.

$$F_{b_{UNISTRUT}} = 0.60\, F_Y$$

$$= 0.60 \times 33\,\text{KSi}$$

$$= 19.8\,\text{KSi} > F_b = 11\,\text{KSi}$$

(see page 2-2)

Also $h/t_w = 1.415/0.105$

$$= 13.48 < 380/F_y^{1/2} = 66$$

$$\therefore F_{V_{UNISTRUT}} = 0.4\, F_Y$$

$$= 0.4 \times 33\,\text{KSi}$$

$$= 13.2\,\text{KSi} > F_V = 11\,\text{KSi}$$

(see page 2-2)

Select the lesser value of F_b & F_V: 11 KSi

for UNISTRUT P5000.

Assuming giving: welding size $1\frac{1}{2}'' - 4''$
Per table 2-1 of § 2.3, AWS D1.1-90.
the effective weld size: $\frac{3}{8}R$ for GMAW

where R is the Radius of outside surface of P1000 *

* inside Radius $R_i = 0.03125''$

Assuming $R = R_o = R_i + 0.105'' \rightarrow t$
$= 0.136$ in.

$\therefore C_{eff} = 0.375 \times 0.136''$
$= 0.051$ in

Allowable welding stress $F_{W_u} = 11$ KSI for the unistrut
(see page 2-2)

the SHEAR force diagram for Fig 2.3 can be shown in Fig 2.5

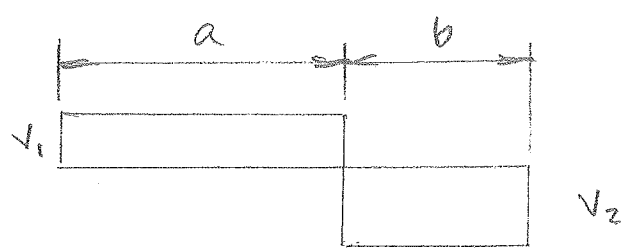

Fig 2.5

where

$a = 51.492$ in

$b = 26.208$ in

$V_1 = 509$ #

$V_2 = 1000$ #

(see Page 2-5 & 2-6)

Treated weldment as line, then:

The normal SHEAR force subject to the weldment:

$$f_{V_{W1}} = 1000\#/(2 \times \frac{2.0}{4.0} \times 26.208) \text{ in}$$

$$= 30.156 \ \#/\text{in}$$

The shear force due to the bending:

$$f_{V_2} = \frac{V}{2I_z}\left(\frac{h^2}{4} - y_1^2\right)$$

(Per "Strength of Materials" by S. Timoshenko 2nd Edition)

where

$V = V_2 = 1000$ #

$h = 7.625$ in

$I_z = 17.6558 \text{ in}^4$

(see Page 2.15)

y_1: the distance between centroid line to the weld in y direction

$y_1 = 2.3799$ in

$$\therefore \quad f_{v_2} = \frac{1000\,\#}{2 \times 17.6558\ \text{in}^4} \times \left(\frac{7.625^2}{4} - 2.3799^2\right) \text{in}^2$$

$$= 251.227\ \#\ \text{in}^{-2}$$

$$f_{vw_2} = f_{v_2}\,(1.625\ \text{in} - 2 \times 0.136\ \text{in})$$

$$= 340\ \#/\text{in}$$

$$f_{vw} = (f_{vw_1}^2 + f_{vw_2}^2)^{1/2}$$

$$= 342\ \#/\text{in}$$

the Allowable welding force per length

$$F_w/\text{in} = 11{,}000\ \#\ \text{in}^{-2} \times 0.051\ \text{in} \times \frac{2 \times 2.0}{4}$$

$$= 561\ \#/\text{in} > f_{vw} = 342\ \#/\text{in}$$

weldment is ok.

SUBJECT: The geometrical properties of the Combination of P1000 & Tube 6"×2"×3/16"

NAME | DATE | REVISION DATE

$I_{z_1} = 11.1 \text{ in}^4$

$S_{z_1} = 3.70 \text{ in}^3$

$A_1 = 2.77 \text{ in}^2$

$I_{z_2} = 0.185 \text{ in}^4$

$S_{z_2} = 0.202 \text{ in}^3$

$A_2 = 0.556 \text{ in}^2$

$$Z_2 = 1.625'' - \frac{0.185 \text{ in}^4}{0.202 \text{ in}^3}$$

$$= 0.7092 \text{ in}$$

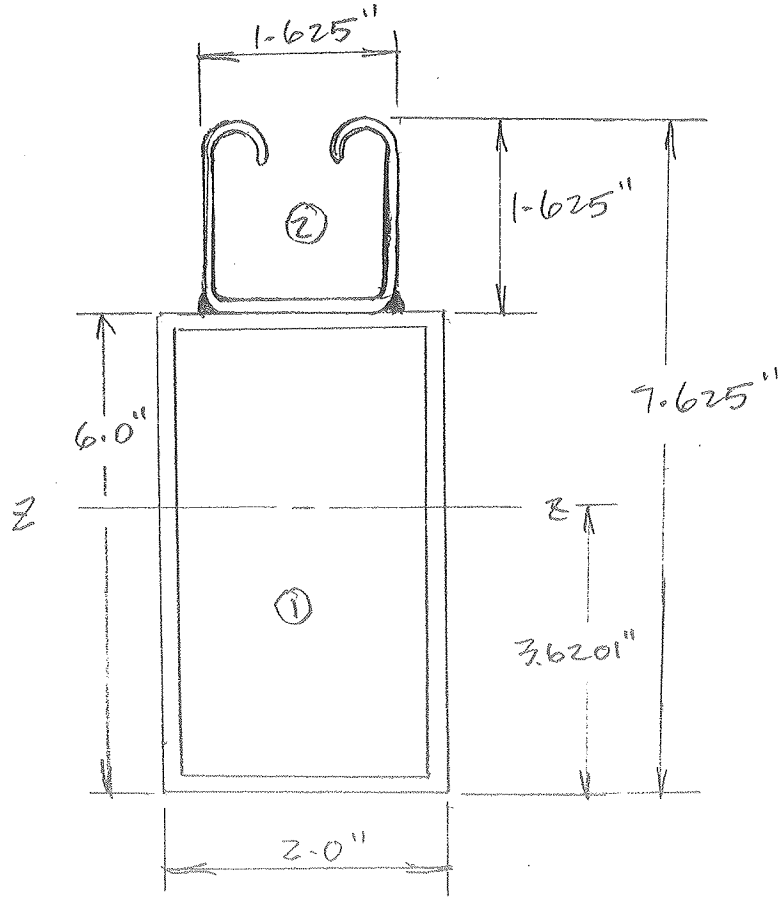

$$\bar{z} = \frac{(2.77 \times 3.0 + 0.556 \times 6.7092) \text{ in}^3}{3.326 \text{ in}^2}$$

$$= 3.6201 \text{ in}$$

where: $d_1 = 0.6201$ in

$d_1^2 A_1^2 = 1.0651 \text{ in}^4$

$d_2 = 3.0891$ in

$d_2^2 A_2 = 5.3057 \text{ in}^4$

$$I_z = \sum I_{z_i} + \sum d_i^2 A_i^2$$

$$= 11.285 \text{ in}^4 + 6.3708 \text{ in}^4$$

$$= 17.6558 \text{ in}^4$$

2nd Approach for Analysis the weldment & unistrut

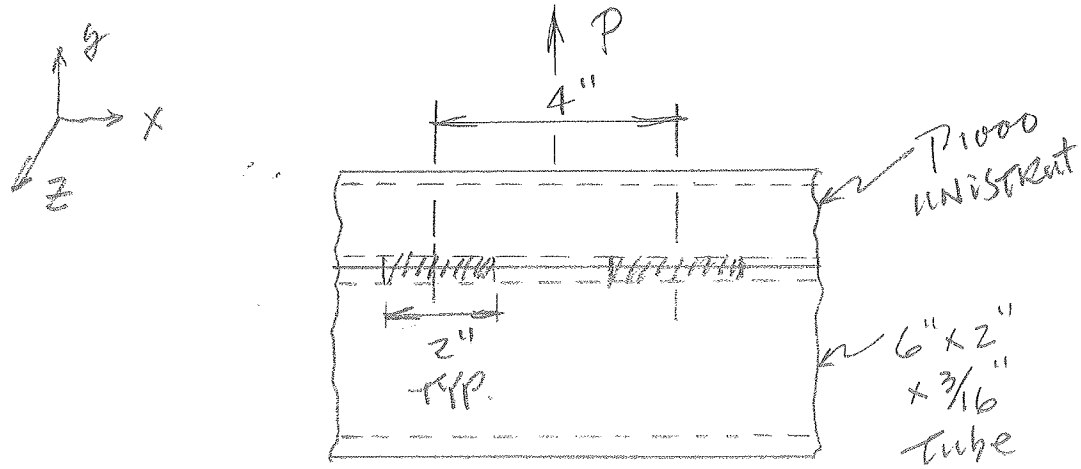

Fig 2-7 (a)

Fig 2-7 represents the unitstrut P1000 under 1000# lifting load.

Assuming both ends as fixed end. then the FBD will be:

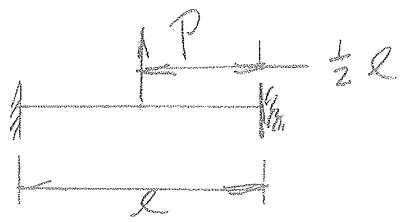

Fig 2-7 (b)

Assuming $l = 4$ in

$P = 1000$ #

$$M_{max} = \frac{Pl}{8} = 500 \text{ \#.in}$$

$f_{bx} = M_{max}/S_x$

$= 500\#\cdot in / 0.202\ in^3$ (see page 2.15)

$= 2.475\ KSi < F_b = 11\ KSi$

$f_v = 500\#/A = 0.556\ in^2$

$= 0.899\ KSi < F_{v\,unist} = 11\ KSi$

$\therefore$ the unistrut under local force is OK.

Weldment:

treated the welds as line

Assuming the current welds in xz plane will experience the same value of moment as the welds in yz plane

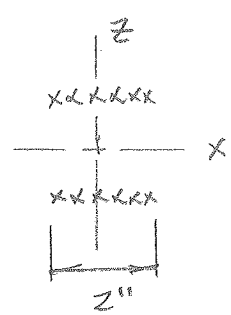

then $S_z = \frac{2^2\ in^2}{3}$

$= 1.333\ in^2$

$f_b = M/S_z$

$= 500\ \#\cdot in / 1.333\ in^2$

$= 375\ \#/in$

$f_v = V/\ell$

$= 500\ \#/2\ in \times 2$

$= 125\ \#/in$

$f_R = (f_b^2 + f_v^2)^{1/2}$

$= 395\ \#/in < F_{w/in} = 561\ \#/in$ (see page 2.14)

∴ Both Approaches are ok subject to the Design of weldment.

SUBJECT: Flat plate Fittings – P1925

NAME: E. CHI

DATE | REVISION DATE

per drawing MD-386270,
item 6 is the mounting plate for connecting the swivel Hoist Ring with $\frac{1}{2}$"-13 Channel Nut,
per unistrut "Channel Nut Load Data"

see page A-1

the Allowable pull-out strength

$$P_{Nut} = 2000^{\#} > P_{Ap} = 1000^{\#}$$

with safety factor 3.

where P_{Ap}: applying load
$1{,}000^{\#} = P_e$

(see page 2.12)

∴ the plate & Nut are ok.

FERMILAB
ENGINEERING NOTE

SECTION	PROJECT	SERIAL-CATEGORY	PAGE
			4.1

SUBJECT

NAME: E. CHI

DATE: 4/10/00

REVISION DATE:

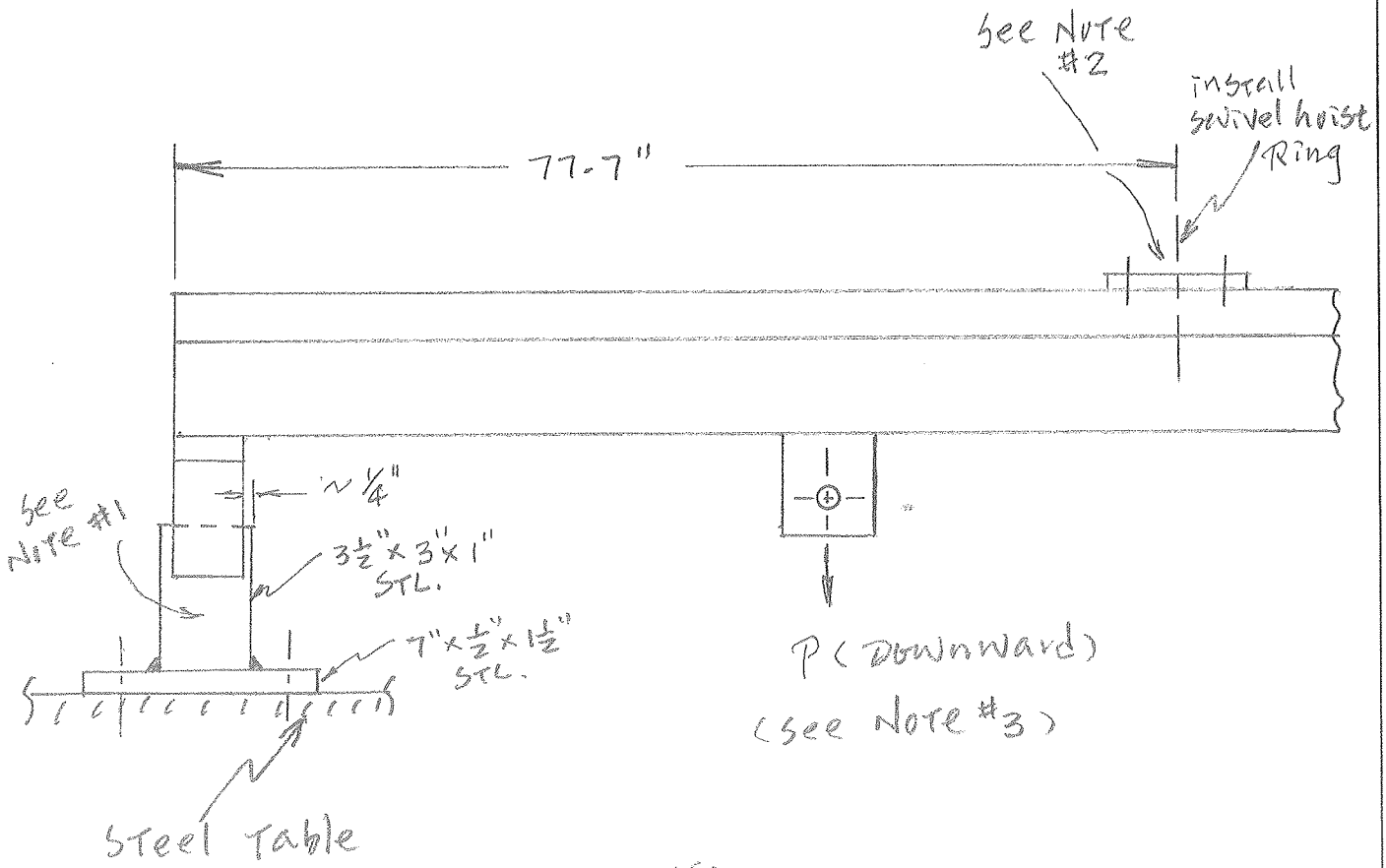

Fig 4.1

Notes

1. Support Block:
   clamping / welding to the STL. Table.
   the lifting Fixture's U shape end channel sitting on the top of the support Block As showing in Fig 4.1.

2. Positioning the Adjustable Block to the location as showing in Fig 4.1 (77.7 in)

installing $\frac{1}{2}$"-13 swivel Hoist Ring and lifted by crane.

3. Applying downward load P as showing in Fig 4.1.

where

$P = 1,890$ #

the duration of load is 5 minutes

A-1

CHANNEL NUT LOAD DATA
FOR 1-5/8" (41 MM) WIDTH SERIES CHANNEL

UNISTRUT

MAXIMUM ALLOWABLE PULL-OUT AND SLIP LOADS

Channel Nut Size/Thread	Gage	Channel	Allowable Pull-Out Strength		Resistance to Slip		Torque	
			Lbs	kN	Lbs	kN	Ft Lbs	N•m
3/4" - 10	12	P1000 P3000 P5000 P5500	2500	11.1	1700	7.6	125*	170
5/8" - 11			2500	11.1	1500	6.7	100*	135
1/2" - 13			2000	8.9	1500	6.7	50	70
7/16" - 14			1400	6.2	1000	4.4	35	50
3/8" - 16			1000	4.4	800	3.6	19	25
5/16" - 18			800	3.6	500	2.2	11	15
1/4" - 20			600	2.7	300	1.3	6	8
1/2" - 13	12	P3300	1500	6.7	1500	6.7	50	70
3/8" - 16			1000	4.4	800	3.6	19	25
5/16" - 18			800	3.6	500	2.2	11	15
1/4" - 20			600	2.7	300	1.3	6	8
1/2" - 13	14	P1100 & P4100	1400	6.2	1000	4.4	50	70
3/8" - 16			1000	4.4	750	3.3	19	25
5/16" - 18			800	3.6	400	1.8	11	15
1/4" - 20			600	2.7	300	1.3	6	8
1/2" - 13	16	P2000 & P4000	1000	4.4	1000	4.4	50	70
3/8" - 16			1000	4.4	750	3.3	19	25
5/16" - 18			800	3.6	400	1.8	11	15
1/4" - 20			600	2.7	300	1.3	6	8

* May require 3/8" or 1/2" thick fitting.
Nut design loads include a minimum safety factor of 3.
Note: Refer to the Channel Nut Selection Chart on the following two pages for the part number.

A-2

FLAT PLATE FITTINGS
FOR 1-5/8" (41 MM) WIDTH SERIES CHANNEL

UNISTRUT

P2324

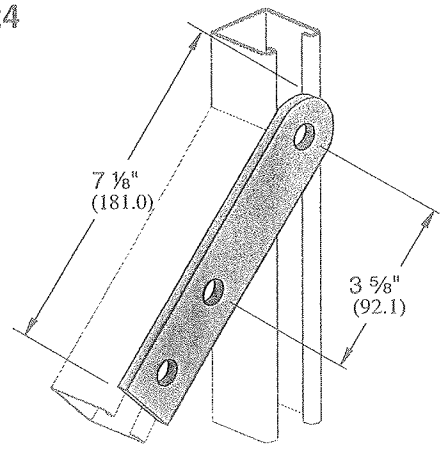

Wt/C 75 Lbs (34.0 kg)

P1066

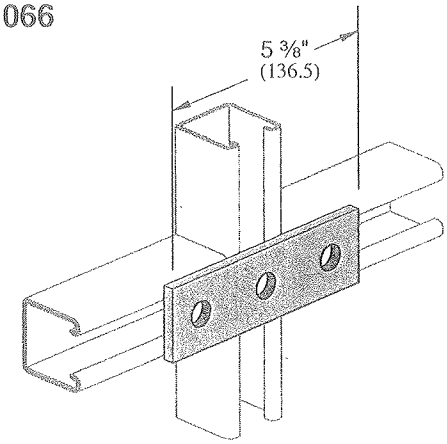

Wt/C 56 Lbs (25.4 kg)

P1925

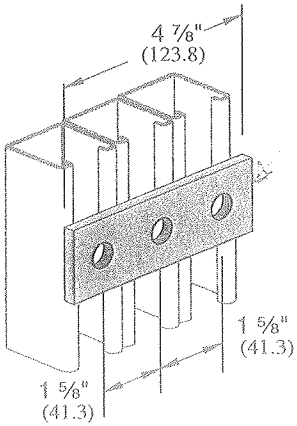

Wt/C 50 Lbs (22.7 kg)

067

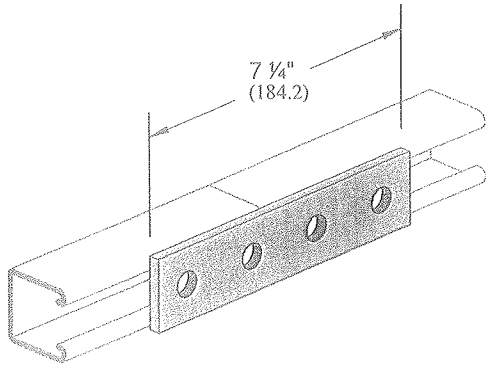

Wt/C 78 Lbs (35.4 kg)

P2079

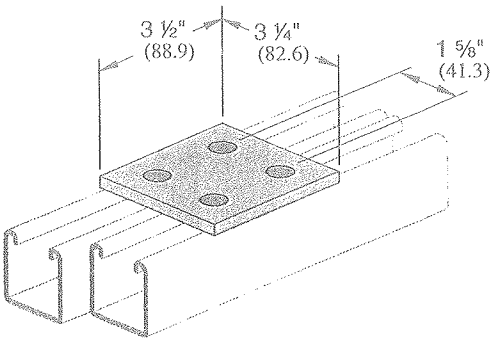

Wt/C 73 Lbs (33.1 kg)

P1941

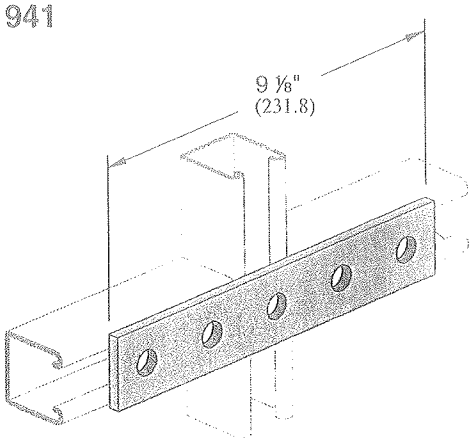

Wt/C 94 Lbs (42.6 kg)

Hole Size	Hole Spacing	Width	Thickness
9/16" Diameter 14.3 mm	13/16" (20.6 mm) From End 1-7/8" (47.6 mm) On Center	1-5/8" 41.3 mm	1/4" 6.4 mm

A-3

(1) a groove angle of 60° or greater at the root of the groove when made by any of the following welding processes: shielded metal arc, submerged arc, gas metal arc, flux cored arc, or electrogas welding

(2) a groove angle not less than 45° at the root of the groove when made in flat or horizontal positions by gas metal arc or flux cored arc welding

The design weld size of a prequalified partial joint penetration groove weld shall not be greater than that shown in Figure 2.5 for the particular welding process, joint designation, groove angle, and welding position proposed for use in welding fabrication.

2.3.1.4 The effective weld size for flare groove welds when filled flush to the surface of a bar, a 90° bend in a formed section, or a rectangular tube shall be as shown in Table 2.1.

(1) When required by the Engineer, test sections shall be used to verify that the effective weld size is consistently obtained.

(2) For a given set of procedural conditions, if the contractor has demonstrated consistent production of larger effective weld sizes than those shown in Table 2.1, the contractor may establish such larger effective weld sizes by qualification.

(3) Qualification required by (2) shall consist of sectioning the radiused member, normal to its axis, at midlength and ends of the weld. Such sectioning shall be made on a number of combinations of material sizes representative of the range used by the contractor in construction or as required by the Engineer.

Table 2.1
Effective Weld Sizes of Flare Groove Welds (see 2.3.1.4)

Flare-Bevel-Groove Welds	Flare-V-Groove Welds
5/16 R	1/2 R*

NOTE: R = radius of outside surface

*Use 3/8 R for GMAW (except short circuiting transfer) process when R is 1/2 in. (13 mm) or greater.

2.3.1.5 The minimum weld size of a partial joint penetration groove weld shall be as specified in Table 2.3.

2.3.2 **Fillet Welds.** The effective area shall be the effective weld length multiplied by the effective throat. Stress in a fillet weld shall be considered as applied to this effective area, for any direction of applied load.

2.3.2.1 The effective length of a fillet weld shall be the overall length of the full-size fillet, including boxing. No reduction in effective length shall be made for either the start or crater of the weld if the weld is full size throughout its length.

2.3.2.2 The effective length of a curved fillet weld shall be measured along the centerline of the effective throat. If the weld area of a fillet weld in a hole or slot computed from this length is greater than the area found from 2.3.3, then this latter area shall be used as the effective area of the fillet weld.

2.3.2.3 The minimum effective length of a fillet weld shall be at least four times the nominal size, or the size of the weld shall be considered not to exceed 25% of its effective length.

2.3.2.4 The effective throat shall be the shortest distance from the joint root to the weld face of the diagrammatic weld (see Appendix I). Note: See Appendix II for formula governing the calculation of effective throats for fillet welds in skewed T-joints. A convenient tabulation of measured legs (W) and acceptable root openings (R) related to effective throats (E) has been provided for dihedral angles between 60° and 135°.

2.3.3 **Plug and Slot Welds.** The effective area shall be the nominal area of the hole or slot in the plane of the faying surface.

2.3.4 The effective throat of a combination partial joint penetration groove weld and a fillet weld shall be the shortest distance from the joint root to the weld face of the diagrammatic weld minus 1/8 in. (3 mm) for any groove detail requiring such deduction (see Appendix I).

Part B
Structural Details

2.4 Fillers

2.4.1 Fillers may be used in

(1) Splicing parts of different thicknesses.

(2) Connections that, due to existing geometric alignment, must accommodate offsets to permit simple framing.

2.4.2 A filler less than 1/4 in. (6.4 mm) thick shall not be used to transfer stress, but shall be kept flush with the welded edges of the stress-carrying part. The sizes of welds along such edges shall be increased over the required sizes by an amount equal to the thickness of the filler (see Figure 2.1).

2.4.3 Any filler 1/4 in. (6.4 mm) or more in thickness shall extend beyond the edges of the splice plate or connection material. It shall be welded to the part on which it is fitted, and the joint shall be of sufficient strength to transmit the splice plate or connection material stress applied at the surface of the filler as an eccentric load. The welds joining the splice plate or connection material to the filler shall be sufficient to transmit the splice plate or connection material stress and shall be long enough to avoid overstressing the filler along the toe of the weld (see Figure 2.2).

REV	DESCRIPTION	DRAWN	DATE
		APPROVED	DATE

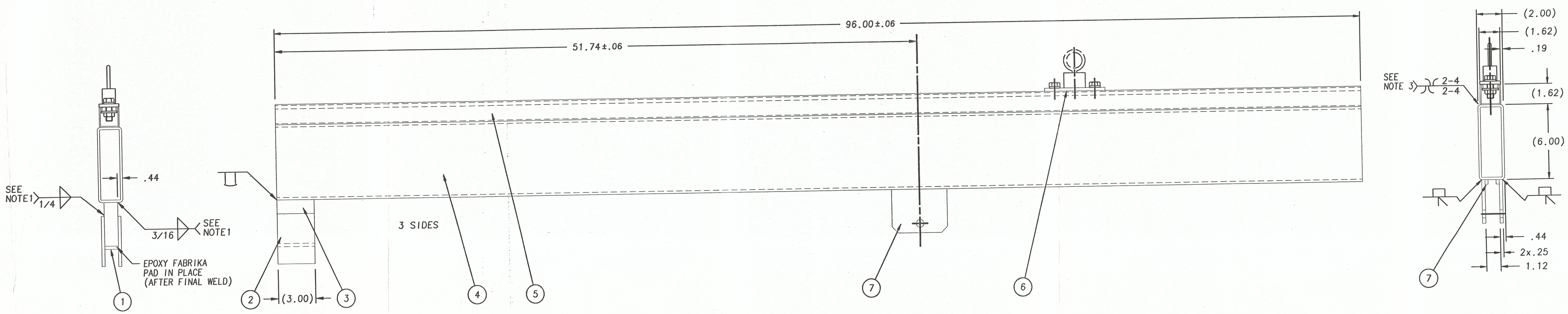

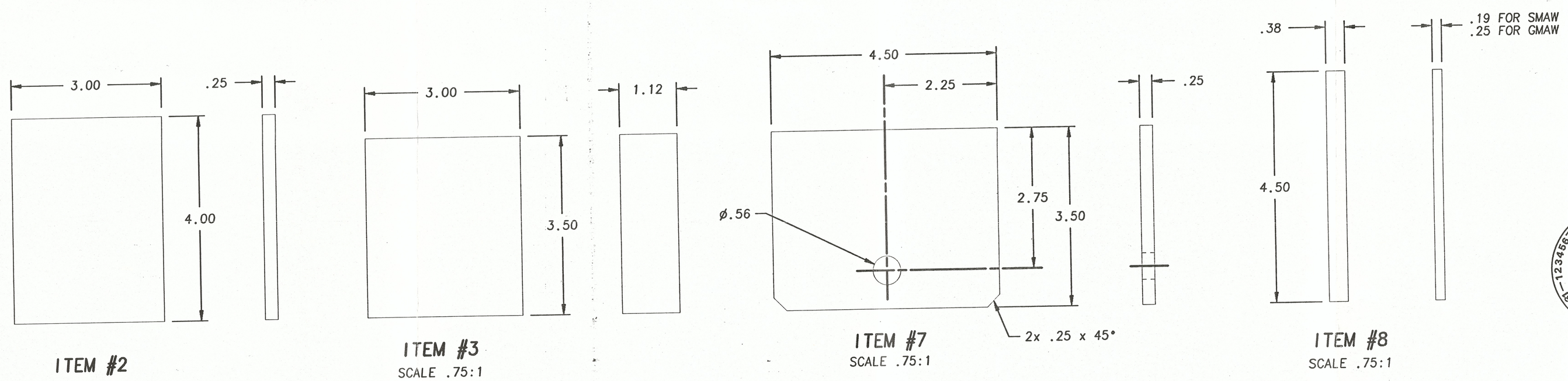

ITEM #2
SCALE .75:1

ITEM #3
SCALE .75:1

ITEM #7
SCALE .75:1

ITEM #8
SCALE .75:1

NOTES:
1) PRE-HEAT TO 150°F
2) IF SMAW USE LOW HIDROGEN ELECTRODE
3) SEE A.W.S. P.6 (2.7.1.4.)
AND P.396 EQ.1
4) SINGLE-BEVEL-GROOVE-WELD (4)
A.W.S. D1.1-92 P.13
SMAW ⇒ ∝=45, R=1/4
GMAW ⇒ ∝=30, R=3/16 OR ∝=45, R=1/4

ITEM	PART NUMBER	DESCRIPTION	QTY
8	COMM./STK.	PLATE/BAR ASTM A-36 H.R.S.	2
7	COMM./STK.	PLATE/BAR ASTM A-36 H.R.S.	2
6	COMM./STK.	UNISTRUT SPLICE PLATE P1925	1
5	COMM./STK.	1.62 x 1.62 UNISTRUT CHANNEL P1000	1
4	COMM./STK.	6.0 x 2.0 x.188 ASTM A500 RECTANGULAR STEEL TUBE	1
3	COMM./STK.	PLATE/BAR ASTM A-36 H.R.S.	1
2	COMM./STK.	PLATE/BAR ASTM A-36 H.R.S.	2
1	COMM./STK.	FABRIKA CUSHION PAD	1

PARTS LIST

APR 2000 REFERENCE ONLY Not For Fabrication

UNLESS OTHERWISE SPECIFIED

FRACTION	DECIMAL	ANGLES
± –	± .03	± 1

1. BREAK ALL SHARP EDGES 1/64 MAX.
2. DO NOT SCALE DRAWING.
3. DIMENSIONS BASED UPON ANSI Y14.5M-1982
4. MAX. ALL MACH. SURFACES – √

ORIGINATOR	TONY LEVAND	03/06/00
DRAWN	K.POTTER	03/09/00
CHECKED	TONY LEVAND	03/29/00
APPROVED	ANDY STEFANIK	03/29/00

USED ON

MATERIAL
SEE PARTS LIST

FERMI NATIONAL ACCELERATOR LABORATORY
UNITED STATES DEPARTMENT OF ENERGY

PPD/MECHANICAL SUPPORT
MDT C SUBOCTANT
LIFTING FIXTURE

SCALE	DRAWING NUMBER	SHEET	REV
.375	3823.113-MD-386270	1 OF 1	

CREATED WITH : GROUP: