Fermilab

Particle Physics Division

Mechanical Department Engineering Note

Number: MD-ENG-406 Date: September 15, 2011

Project: COUPP 60 Kg Outer Vessel, Pressure Vessel Analysis

Project Internal Reference: PPD/MD/COUPP

Title: COUPP 60 Kg Outer Vessel Window Port Issues

Author(s): Kurt Krempetz, Russ Rucinski

Reviewer(s):

Key Words: COUPP 60 Kg Outer Vessel, pressure vessels

Abstract/Summary:
This is a structural analysis documenting the concerns and issues regarding the COUPP 60 KG Outer Pressure vessel. This analysis concludes the "as-built" vessel follows the ASME code and FESHM Chapter 5031.

Applicable Codes:
Fermilab Environment, Safety, and Health manual, chapter 5031, ASME Boiler and Pressure Vessel code, Section 8, Division 1.

COUPP 60 Kg Outer Vessel Window Port Issues

September 15, 2011 K. Krempetz and R. Rucinski

Introduction

An ASME code vessel was purchased in 2006 from Val-Fab ,NB#27, mfr. serial number 27, for the COUP 60 kg project. This vessel is referred to as the COUPP 60 kg outer vessel. This vessel was fabricated at Val-Fab's shop and is ASME Division 1 stamped vessel. The vessel's original MAWP was 600 psi but then a top plate and extension was put on the vessel again by Val-Fab (ASME repair). When the repair was done the new MAWP was 450 psi. The new MAWP was a decision the Project made abandoning the possibility of running CF_3Br in the bubble chamber which is contained by this COUPP 60 kg outer vessel. The COUPP outer vessel is filled with propylene glycol and has 3 view ports. These ports roughly have a 6" inside diameter and a 10" outside diameter. They were installed on the original vessel and have never been altered. The vessel's normal operating pressure varies from a 0 psi to 250 psi and is cycled about every minute. As of this date it is estimated the vessel has been cycled about 10,000 times. The glycol temperature contained by the COUPP 60 Kg outer vessel is controlled and can be changed from 0 C to 45C. The thermal cycle time is long, on the order of days. The vessel has been running in various places at Fermilab and is currently in the MINOS underground area. Below is a picture of the vessel.

Picture: Original vessel (MAWP = 600 psi) before shell lengthening and top lid modifications.

Window Ports

A person discovered that the "as-intended" drawings of the vessel and window ports did not match his observations and measurements. Appendix 1 illustrates what he observed and what he was expecting to observe. The sketch shows the horizontal and vertical cross-sections through the nozzle centerline to illustrate how the nozzle was thought to be attached and how it was actually attached. In the horizontal section the inside weld meets the outside weld. Appendix 2 is a sketch of the as-built measurements of the window ports. Below are pictures of a window port. One shows the outer weld and the other picture shows the inner weld.

Picture: Outside and inside attachment welds of the viewport.

Code Calculations

After this discrepancy was found the Val-Fab code calculations of the vessel and window ports were reviewed. The calculations Val-Fab supplied did not appear to be consistent with the actual vessel. When the vendor was contacted and questioned about the calculations, we were referred to their Q/A manager. After several iterations it's been concluded that the Q/A manager no longer has a good understanding of what was actually built.

The code calculations (see appendix 4) were redone for the window port using the relevant sections of the code:

UG-27 for sizing the shell and nozzle thickness.
UG-37 for the shell reinforcement required for the opening in the shell.
UG-40 for limits of reinforcement.
UG-41 for Strength of reinforcement.

UG -45 for nozzle neck thickness.
UW-15 for Welded Connections.
UW-16 for minimum requirements for attachment weld at openings.

The COUPP 60 Kg outer vessel is in compliance with all the above sections except UW-16, where it is unclear. In UW-16 the assumption is made that both the shell and nozzle (our case window port) has a constant wall thickness. See UG-40 (n) or UW-16.1(k). The window ports do not have a constant wall thickness. The ASME Division 1 code does not have formulas or methods to calculate varying wall thickness of the nozzle. Therefore the two cases; the maximum wall thickness of the window ports and the minimum wall thickness of the window ports were calculated. The calculations show that for the minimum window port case, the vessel meets UW-16 but for the maximum window thickness case, UW-16 is not met. This vessel wall was built with much thicker walls due to the original MAWP of 600 psi and the window port wall thickness was larger than need just because a decision was made to use a previous window port design that proven to work well.

Basic Engineering Calculations

Appendix 5 has basic calculations which show that the stress on the nozzle to vessel weld is 2,125psi which is very low compared to the maximum allowable level in UW-15 of 9,187 psi. Also a reasonable moment of 250 ft-lbs was calculated (250 lbs at1 ft) on the window port and the bending stresses in the welds are extremely low. The moment accounts for the possibility that a person might stand on the camera mounting rails.

Cycling Issues

In the process of evaluating the welds in the COUPP 60 kg vessel, the issue of pressure cycling on these welds was brought up as a possible concern. The ASME Div. 1 code indicates when necessary the designer is to consider cyclic loading (UG-22). In the AK steel 304/304L specification sheet, the fatigue strength of 35 ksi is given for 10E8 cycles. The ASME Div 1 code allowable stress level for stainless steel 304 is 18,750 psi which is much less than the 35 ksi. So for stainless steel 304 using code allowable does not require a fatigue analysis for less than 10E8 cycles. If the COUPP 60 kg vessel was cycled every minute then the vessel's lifetime is slightly over 190 years.

Summary

The COUPP 60 kg outer vessel is a code stamped Div 1 vessel and after careful analysis of a potential window port issue, we find no reason or justification to make this code stamp invalid. We base this on UG-2 (g) where it states; "This Division of Section VIII does not contain rules to cover all details of design and construction. Where complete details are not given, it is intended that the Manufacturer, subject to the acceptance of the Inspector, shall provide details of design and construction which will be as safe as those provided by the rules of this Division."

Appendix 1

FERMILAB
ENGINEERING NOTE

SECTION	PROJECT	SERIAL-CATEGORY	PAGE

SUBJECT

NAME

DATE

REVISION DATE

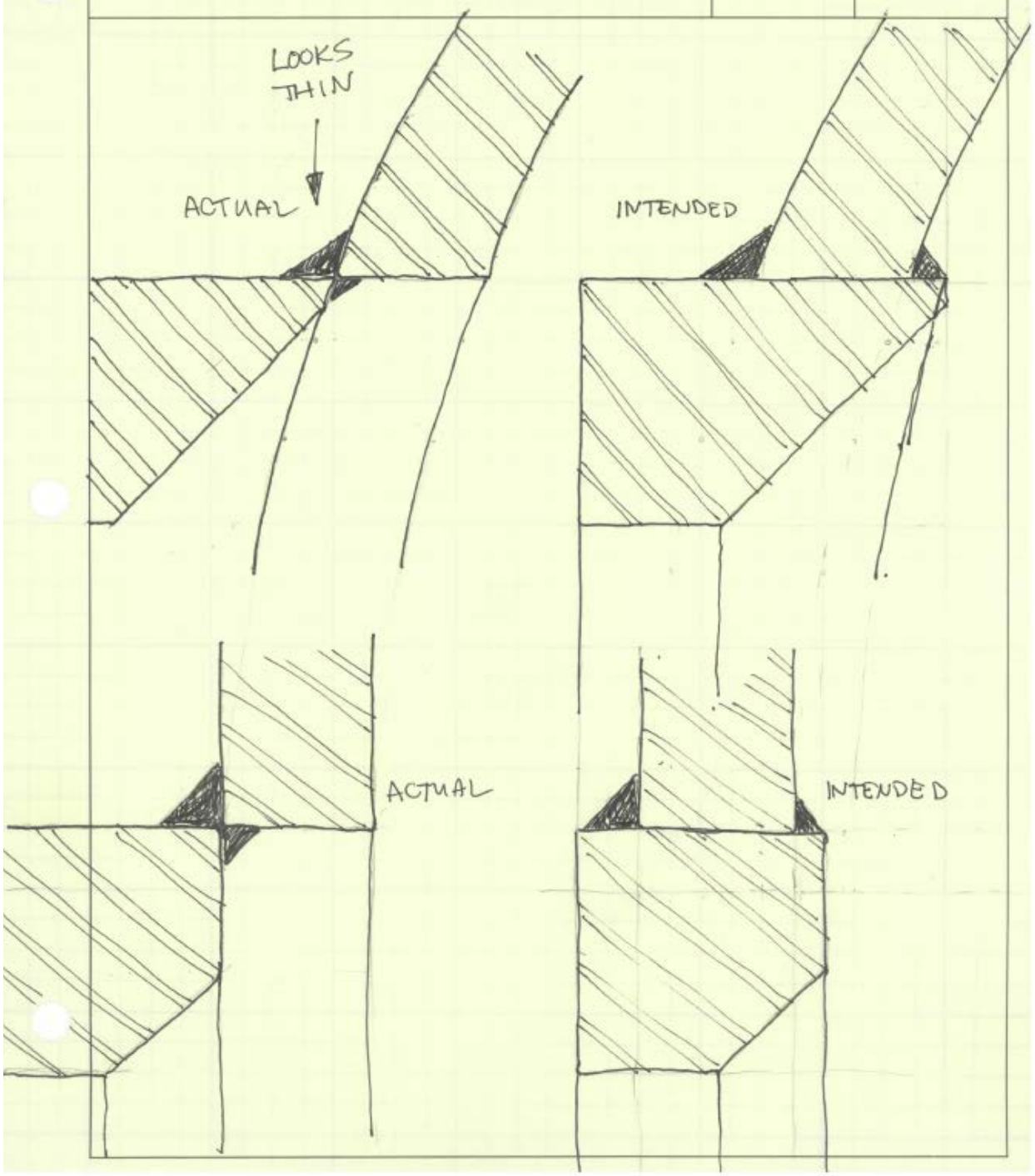

Appendix 2

CAMERA PORT | COUPP 60 | R. RUGINSKI 8/26

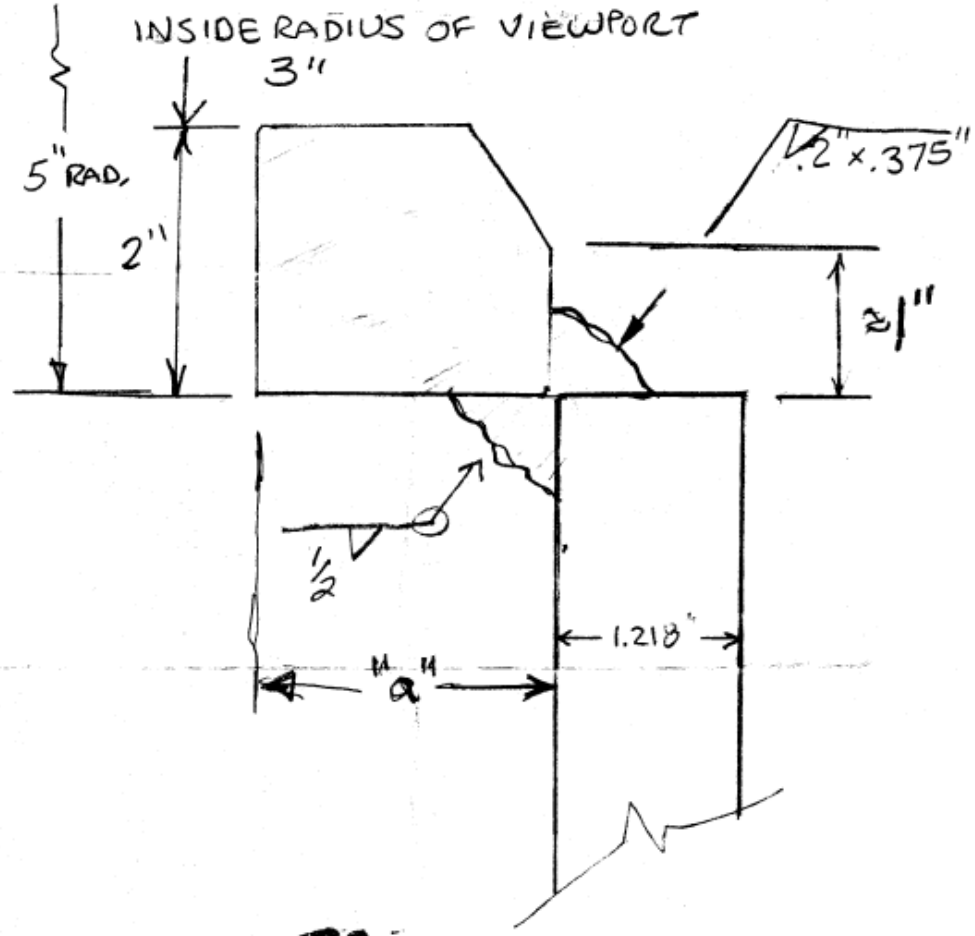

FIELD MEASUREMENTS 8/29/11 R. RUGINSKI

LOCATION WELD SIZE	"a"	RADIAL OR LEG WELD X STEEL WELD
"a" top	2.040"	.412 x .50
"a" bottom	1.986	.375" x .510"
"a" right	3.309	.475" x .605
"a" left	3.326"	.65" x .65

Appendix 3

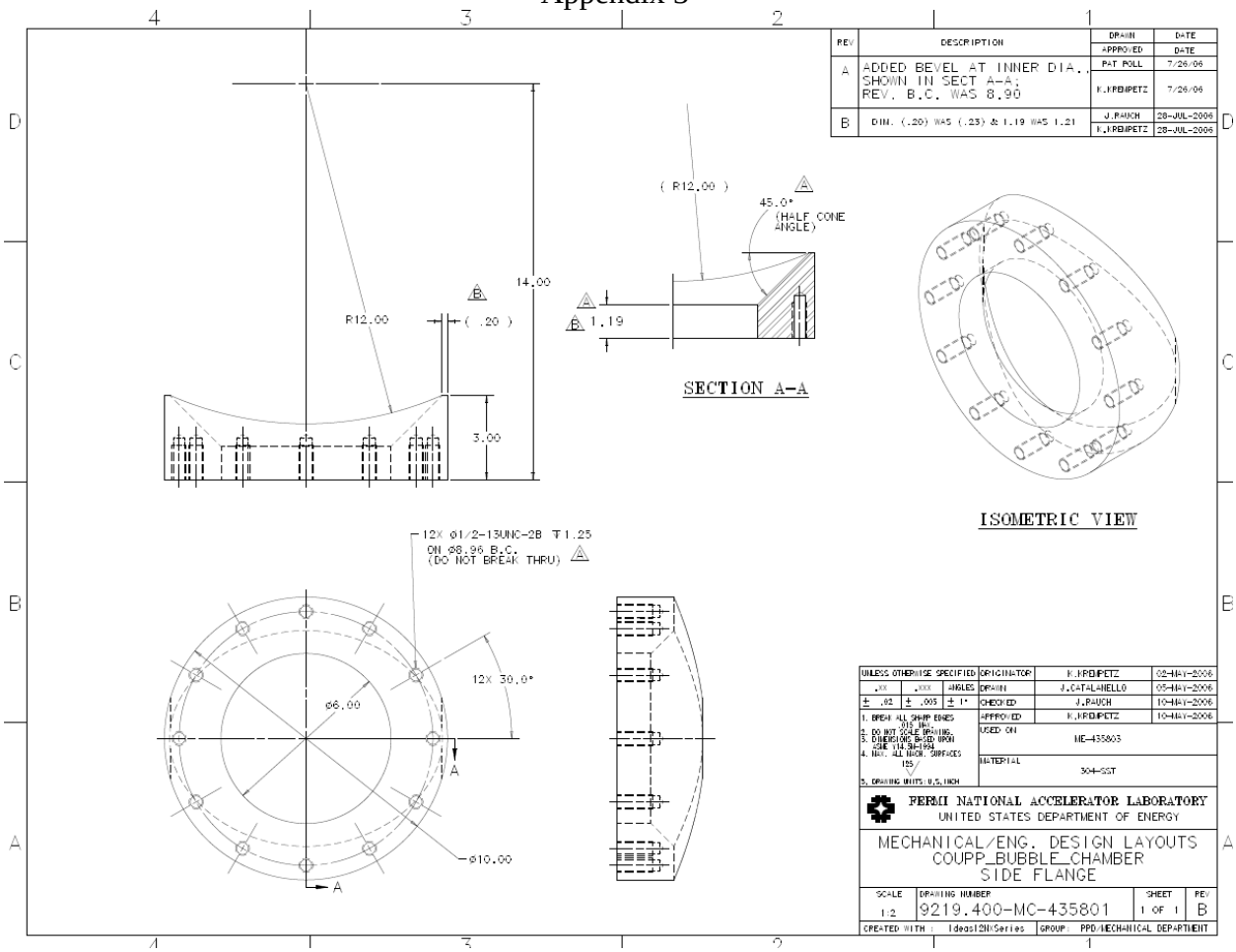
REV
DESCRIPTION
DRAWN
DATE
APPROVED
DATE
A
ADDED BEVEL AT INNER DIA., SHOWN IN SECT A-A; REV. B.C. WAS 8.90
PAT POLL
7/26/06
K.KREMPETZ
7/26/06
B
DIM. (.20) WAS (.23) & 1.19 WAS 1.21
J.RAUCH
28-JUL-2006
K.KREMPETZ
28-JUL-2006
14.00
R12.00
(.20)
3.00
(R12.00)
45.0°
(HALF CONE ANGLE)
1.19
SECTION A-A
ISOMETRIC VIEW
12X Ø1/2-13UNC-2B ↧1.25
ON Ø8.96 B.C.
(DO NOT BREAK THRU)
12X 30.0°
Ø6.00
Ø10.00
A
UNLESS OTHERWISE SPECIFIED
.XX
.XXX
ANGLES
± .02
± .005
± 1°
1. BREAK ALL SHARP EDGES .015 MAX.
2. DO NOT SCALE DRAWING.
3. DIMENSIONS BASED UPON ASME Y14.5M-1994
4. MAX. ALL MACH. SURFACES 125
5. DRAWING UNITS: U.S. INCH
ORIGINATOR
K.KREMPETZ
02-MAY-2006
DRAWN
J.CATALANELLO
05-MAY-2006
CHECKED
J.RAUCH
10-MAY-2006
APPROVED
K.KREMPETZ
10-MAY-2006
USED ON
ME-435603
MATERIAL
304-SST
FERMI NATIONAL ACCELERATOR LABORATORY
UNITED STATES DEPARTMENT OF ENERGY
MECHANICAL/ENG. DESIGN LAYOUTS
COUPP_BUBBLE_CHAMBER
SIDE FLANGE
SCALE
1:2
DRAWING NUMBER
9219.400-MC-435801
SHEET
1 OF 1
REV
B
CREATED WITH : Ideas12NXSeries
GROUP: PPD/MECHANICAL DEPARTMENT

Appendix 4

COUP Pressure Vessel Calculations
K. Krempetz 9/11

Input			
MAWP of vessel (psi)	450		
Main vessel cylindrical shell			
Inside radius of Vessel (in)	12		
Allowable stress of material- shell(psi)	18750		
Weld efficiency for shell	1		
t actual shell thickness (in)	1.218		
Nozzle			
Outer diameter of Nozzle (in)	10		
Allowable stress of material(psi)	18750		
Weld Efficiency-nozzle	1		
Tn actual Nozzle Thickness (in)	0.2		
h distance nozzle into vessel (in)	0		
Weld- shell to nozzle			
outward Weld leg (in)	0.5		
inward Weld leg (in)	0.2		
outer weld throat	0.353		
Inner weld throat	0.176		
ASME UG-37 Factors			
Factor F	1		
E1	1		
Factor fr1	1		
Factor f2r	1		
Calculations			
Inside Radius of Nozzle(in)	4.8		
UG-27- wall thickness cals			
Cylindrial shell Wall thickness			
Circumferential	0.292208		
Longitudinal	0.143312		
Mininum thickness	0.292208		
Nozzle Wall thickness			
Circumferential	0.116883		
Longitudinal	0.057325		
Mininum thickness	0.116883		
UG-37-shell reinforcement Cals			
A- Required area	2.922078		
Possible Area available in Shell	9.257922	2.625547	
A1-Area available in Shell	9.257922		
Possible Area available in Nozzle outward	0.506182	0.083117	
A2-Area available in Nozzle outward	0.083117		
Possible Area available in Nozzle inward	1.218	0.2	0

A3-Area available in Nozzle inward	0	
A41-Area available from outward weld	0.25	
A43-Area available from inward weld	0.04	
Total Area Available	9.631039	
Reinforcement needed	no	
UW-16-Weld Size Required		
actual t1 +t2	0.529	
Weld Size Required-		
t1+t2 must be greater than	0.25	OK
t1 or t2 not less than	0.14	OK

K. Kreamporte
9/11

Weld Loads on Nozzle

Force on Window $= \frac{\pi D^2}{4} \cdot P = \frac{\pi \cdot 10^2}{4} \cdot 450 = 35342.9$ lbs

This force must be take by welds (inner & outer)

Weld throat for a $\frac{1}{2} \times \frac{1}{2}$ fillet $= .353''$ (outside weld)

Weld throat for a $.2 \times \frac{3}{8}$ fillet $= \tan^{-1}(.2/.375) = 28°$

$\sin 28° \cdot .375 = .176''$ (inside weld)

Weld area $= \pi D \cdot w_t = \pi \cdot 10 \cdot .353 + \pi \cdot 10 \cdot .176 = 16.63 \text{ in}^2$

Shear stress $= F/A = 35342.9/16.63 = 2124$ psi

per UW-15 Weld fillet in shear $= .49 \cdot S_{allow} = .49 \cdot 18750 =$
9187.5 psi

Weld OK for Pressure

R. Rampetis
9/11

Possible Moments on Window Port

Assume max moment is 250 lbs @ 1 ft
or 250 ft-lbs

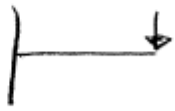

$\frac{Mc}{I} = S_B$

$C = 10''$ Diameter of weld

$I = \pi R^3 t = \pi \cdot 5^3 \cdot (.353 + .176) = \pi \cdot 5^3 \cdot .529 = 207.74 \, in^4$

$250 \cdot 5 / 207.74 = 6.0$ psi not an issue