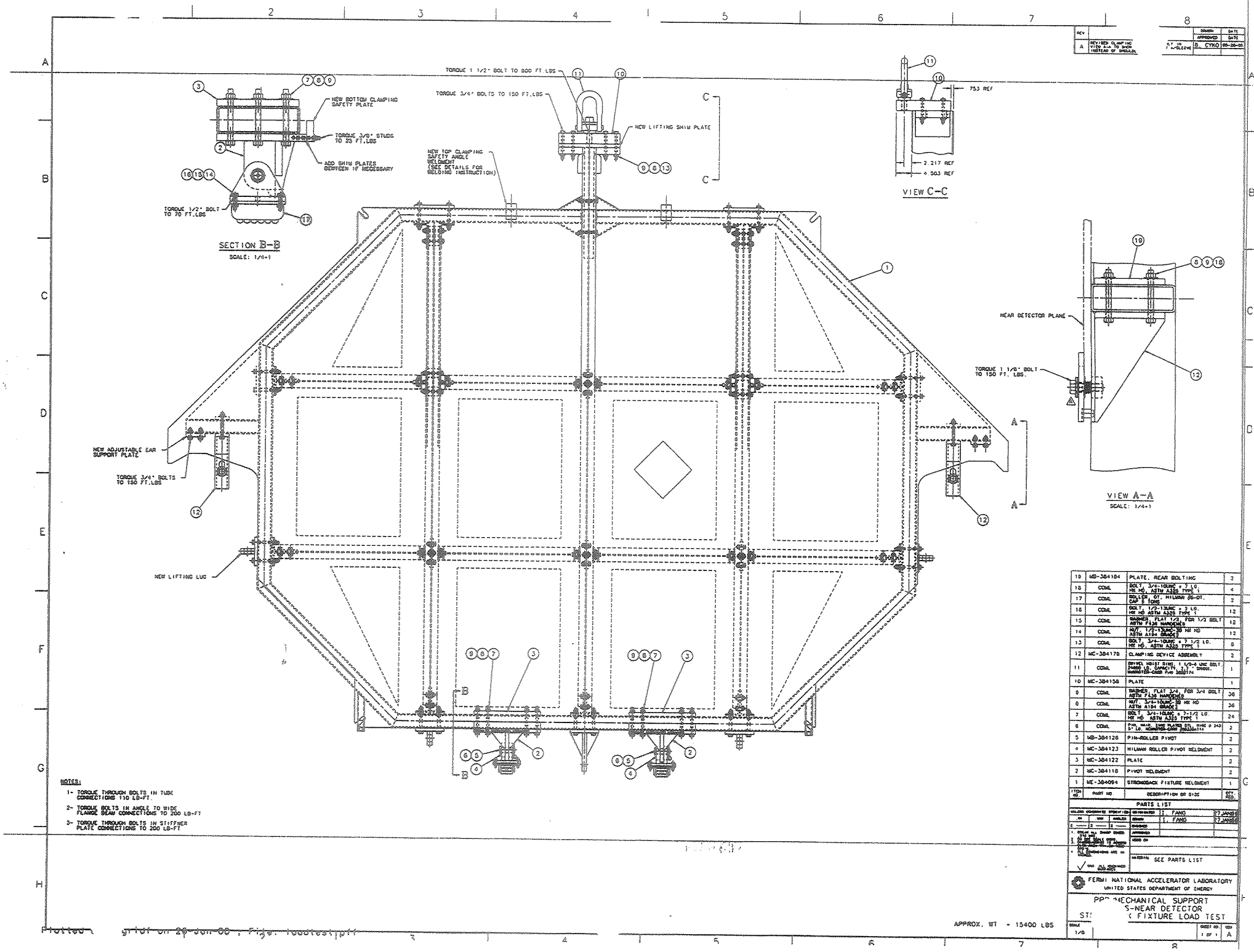

ITEM NO	PART NO	DESCRIPTION OR SIZE	QTY REQD
19	MD-384184	PLATE, REAR BOLTING	3
18	COML	BOLT, 3/4-10UNC x 7/8 LG. HX HD, ASTM A325 TYPE 1	4
17	COML	ROLLER, OT, HILMAN RG-OT. CAP 8 TONS	2
16	COML	BOLT, 1/2-13UNC x 3 LG. HX HD ASTM A325 TYPE 1	12
15	COML	WASHER, FLAT 1/2 FOR 1/2 BOLT ASTM F436 HARDENED	12
14	COML	NUT, 1/2-13UNC-2B HX HD ASTM A194 GRADE 2	12
13	COML	BOLT, 3/4-10UNC x 7 1/2 LG. HX HD, ASTM A325 TYPE 1	8
12	MC-384178	CLAMPING DEVICE ASSEMBLY	2
11	COML	SHACKLE HOIST RING 1 1/2-4 UNC BOLT 24000 LB. CAPACITY, 3.1 SAFETY FACTOR, GUARANTEED-CAST FOR DURATION	1
10	MC-384158	PLATE	1
9	COML	WASHER, FLAT 3/4 FOR 3/4 BOLT ASTM F436 HARDENED	36
8	COML	NUT, 3/4-10UNC-2B HX HD ASTM A194 GRADE 2	36
7	COML	BOLT, 3/4-10UNC x 7-1/2 LG. HX HD ASTM A325 TYPE 1	24
6	COML	PIN, HAIR, 3MM PLATED ST, TYPE 0 243 3" LG. MORRISON-BLAIR ATLANTIC	2
5	MD-384126	PIN-ROLLER PIVOT	2
4	MC-384123	HILMAN ROLLER PIVOT WELDMENT	2
3	MC-384122	PLATE	2
2	MC-384118	PIVOT WELDMENT	2
1	MC-384094	STRONGBACK FIXTURE WELDMENT	1

DRAWN	B. CYKO	09-26-00	
APPROVED		DATE	
DRAWN	I. FANO	7 JANUARY	
CHECKED	I. FANO	7 JANUARY	
APPROVED			
ISSUED BY			
MATERIAL	SEE PARTS LIST		

REV	
A	REVISED CLAMPING VIEW A-A TO SHOW INSTEAD OF SHOULDER

Plotted grid on 29-Jun-00 ; File: toolbest.prt

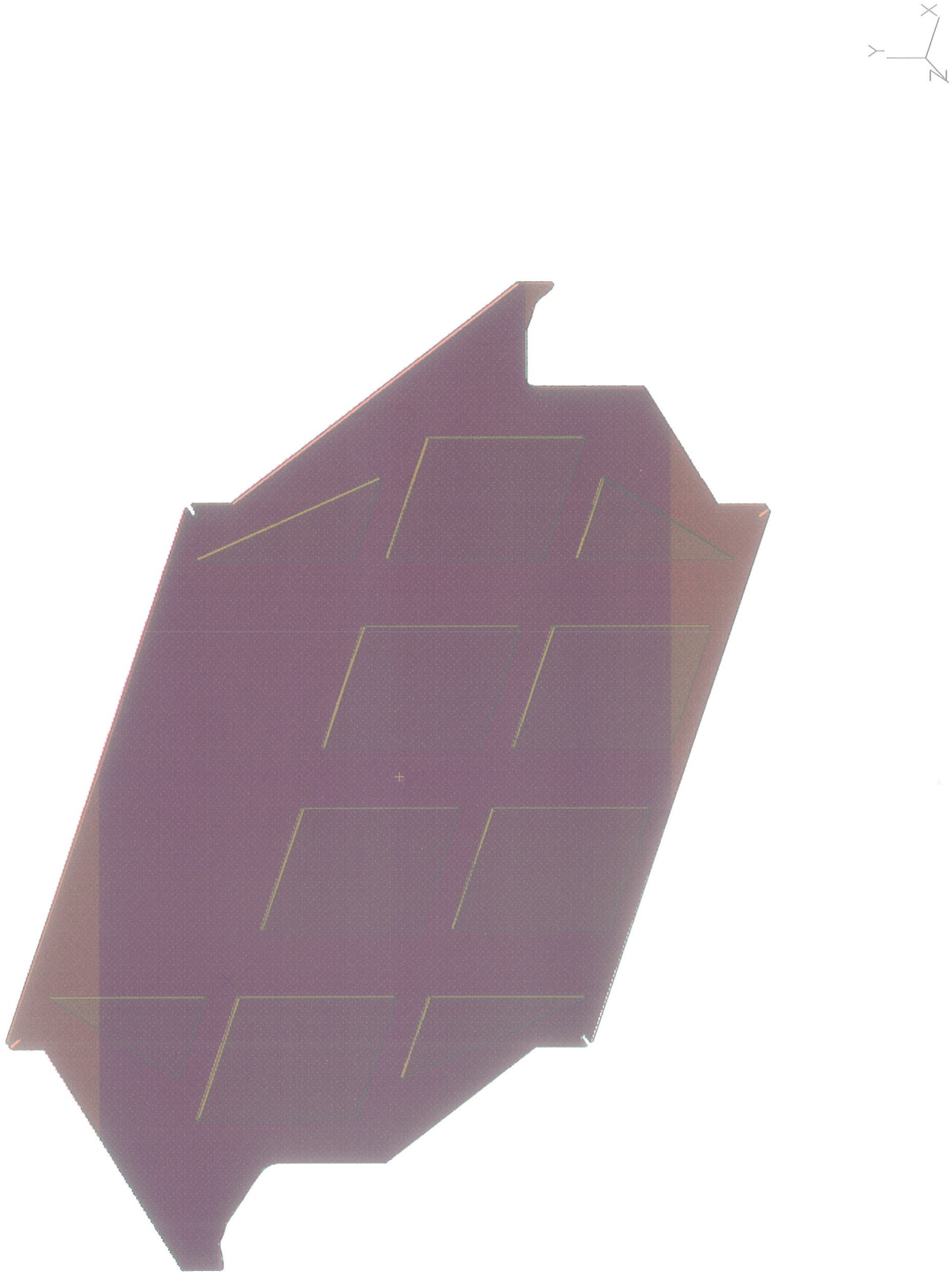
X
Y
N

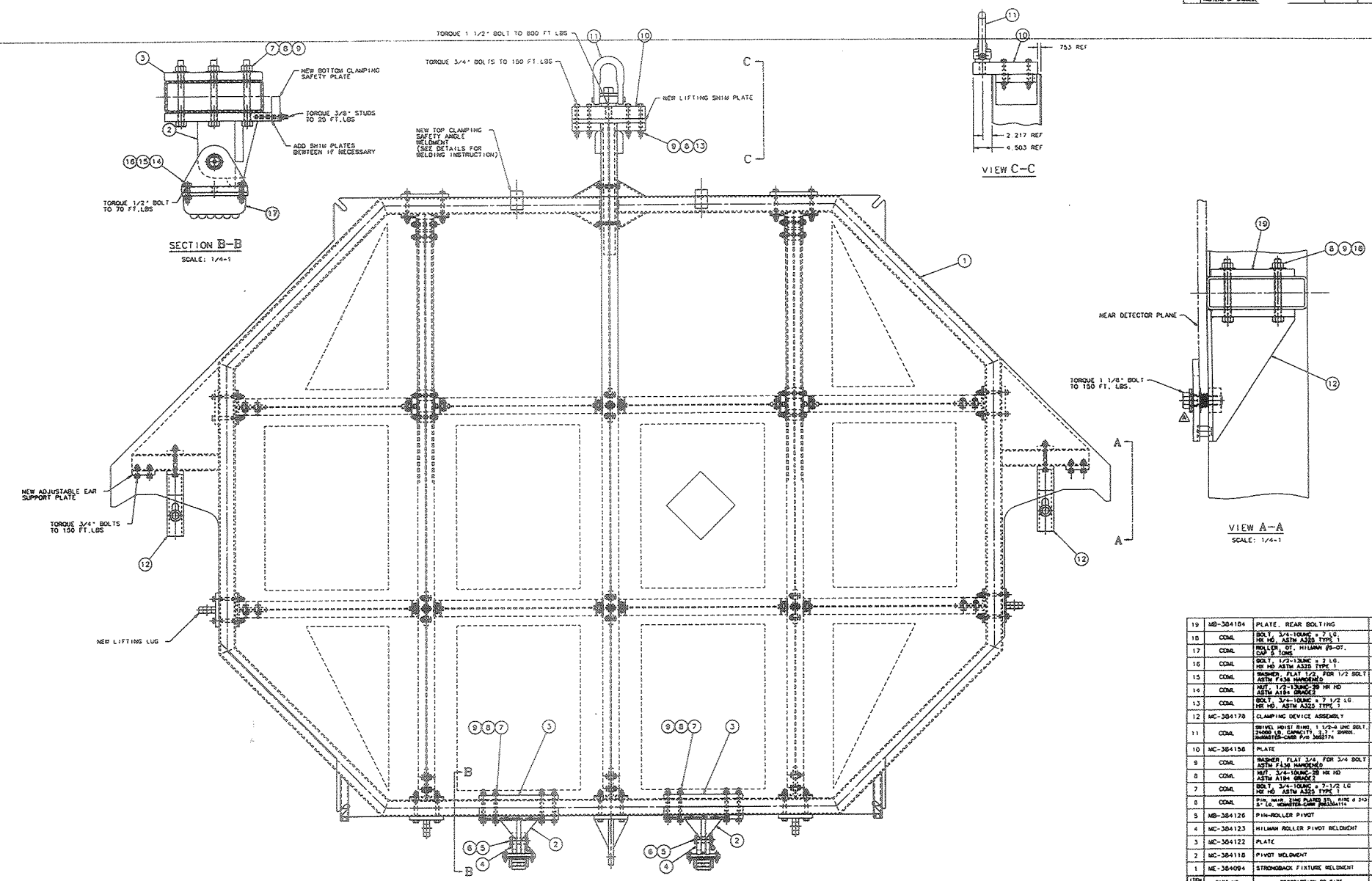

NOTES:

1- TORQUE THROUGH BOLTS IN TUBE CONNECTIONS 110 LB-FT.

2- TORQUE BOLTS IN ANGLE TO WIDE FLANGE BEAM CONNECTIONS TO 200 LB-FT

3- TORQUE THROUGH BOLTS IN STIFFNER PLATE CONNECTIONS TO 200 LB-FT

REV		DRAWN	DATE
A	REVISED CLAMPING VIEW A-A TO SHOW INSTEAD OF SHOULD.	APPROVED	DATE
		B. CYKO	09-28-09

ITEM NO.	PART NO	DESCRIPTION OR SIZE	QTY. REQ.
19	MB-384184	PLATE, REAR BOLTING	2
18	COML	BOLT, 3/4-10UNC x 7 LG. HX HD, ASTM A325 TYPE 1	4
17	COML	ROLLER, OT. HILMAN #5-OT. CAP 5 TONS	2
16	COML	BOLT, 1/2-13UNC x 2 LG. HX HD ASTM A325 TYPE 1	12
15	COML	WASHER, FLAT 1/2, FOR 1/2 BOLT ASTM F436 HARDENED	12
14	COML	NUT, 1/2-13UNC-2B HX HD ASTM A194 GRADE2	12
13	COML	BOLT, 3/4-10UNC x 7 1/2 LG. HX HD, ASTM A325 TYPE 1	8
12	MC-384178	CLAMPING DEVICE ASSEMBLY	2
11	COML	SWIVEL HOIST RING, 1 1/2-6 UNC BOLT, 24000 LB. CAPACITY, 2.7 " SHANK, McMASTER-CARR P/N 3002774	1
10	MC-384158	PLATE	1
9	COML	WASHER, FLAT 3/4, FOR 3/4 BOLT ASTM F436 HARDENED	36
8	COML	NUT, 3/4-10UNC-2B HX HD ASTM A194 GRADE2	36
7	COML	BOLT, 3/4-10UNC x 7-1/2 LG HX HD ASTM A325 TYPE 1	24
6	COML	PIN, MAIN, ZINC PLATED STL. RING @ 243 5" LG. McMASTER-CARR P/N 3304114	2
5	MB-384126	PIN-ROLLER PIVOT	2
4	MC-384123	HILMAN ROLLER PIVOT WELDMENT	2
3	MC-384122	PLATE	2
2	MC-384118	PIVOT WELDMENT	2
1	ME-384094	STRONGBACK FIXTURE WELDMENT	1

PARTS LIST

UNLESS OTHERWISE SPECIFIED			
ORIGINATOR	I. FANG		27JAN98
DRAWN	I. FANG		27JAN98
CHECKED			
APPROVED			
USED ON			

1. DEBUR ALL SHARP EDGES 0.10 MIN.
2. DO NOT SCALE DWG.
3. DIMENSIONS TO ACCORD WITH ANSI Y14.5M-1982 DWG.
4. ALL DIMENSIONS ARE IN INCHES.

√ ONE ALL PRECISION SURFACES

MATERIAL: SEE PARTS LIST

FERMI NATIONAL ACCELERATOR LABORATORY
UNITED STATES DEPARTMENT OF ENERGY

PPD/MECHANICAL SUPPORT
MINOS-NEAR DETECTOR
STRONGBACK FIXTURE LOAD TEST

APPROX. WT - 15400 LBS

SCALE	DRAWING NUMBER	SHEET NO	REV
1/8		1 OF 1	A

Plotted by ingrid on 26-Jun-00 , File: loadtest.pff

DESIGN THE TEST LOAD.

Build up test plate to 125% rated load.

$W = 125\% \times$ rated load

where rated load = 8000 lb

$W = 125\% \times 8000 = 10{,}000$ lb.

Use one old near detector plate and 10 additional steel plates to form a test load.

$W_{old} = 7555$ lb

$W_{30\times40\times1} = 341$ lb

$W_{20\times40\times1} = 114$ lb

Therefore,

$$W_{test\,load} = W_{old} + 6\,W_{30\times40\times1} + 4\,W_{20\times40\times1}$$
$$= 7555 + 6\times341 + 4\times114$$
$$= 10057 \text{ lb} > 10{,}000 \text{ lb}$$

ok

REV	DESCRIPTION	DRAWN / APPROVED	DATE / DATE
A	REVISED CLAMPING DEVICE ASSEMBLY IN VIEW A-A TO SHOW STANDARD BOLT w/SLEEVE INSTEAD OF SHOULDER BOLT.	B. CYKO	09-28-99

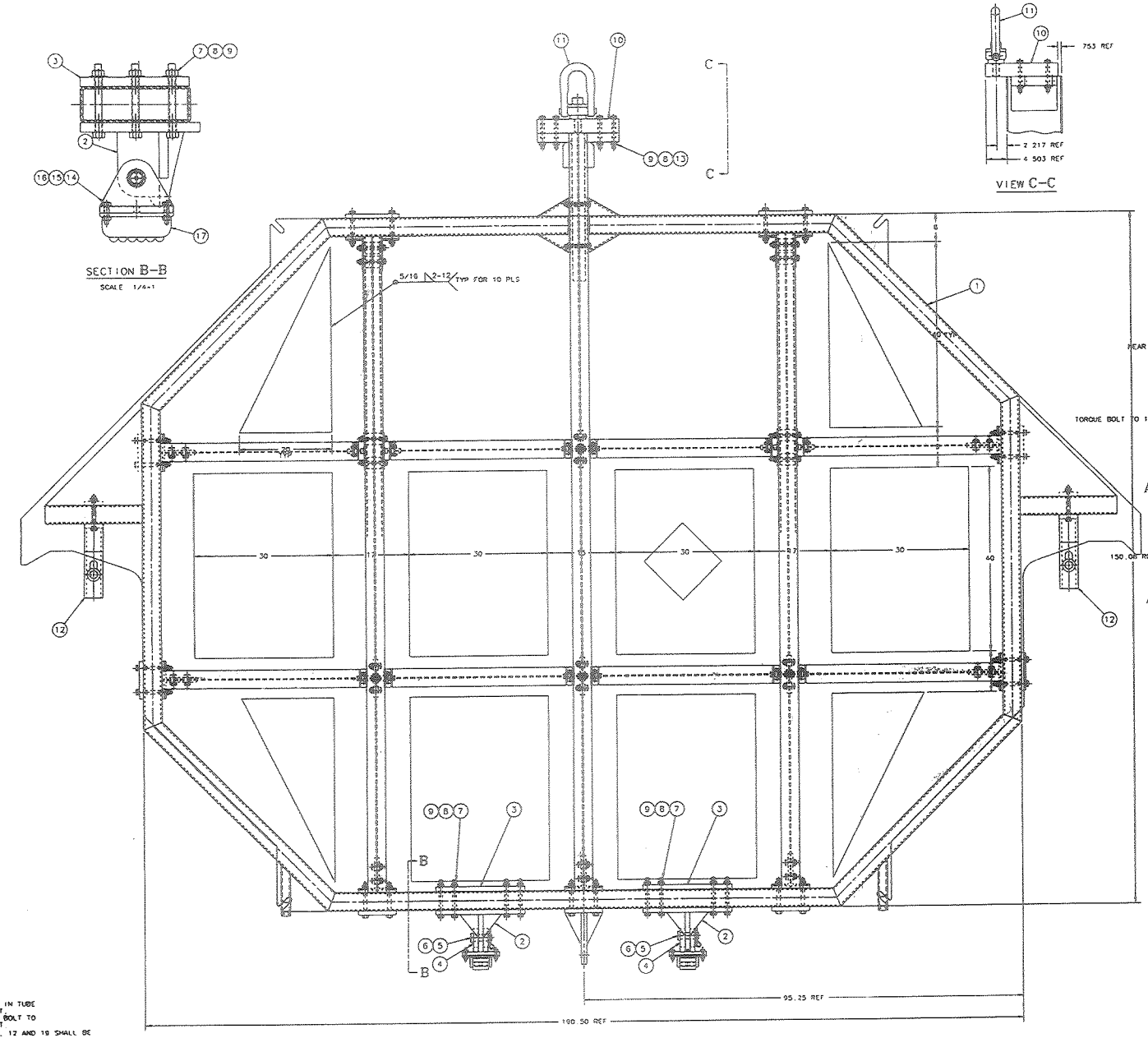

NOTES.

1- TORQUE THROUGH BOLTS IN TUBE CONNECTIONS 110 LB-FT.
2- TIGHTENEN HOIST RING BOLT TO A TORQUE OF 800 LB-FT
3- ITEMS 2, 3, 4, 5, 10, 12 AND 19 SHALL BE PAINTED AS FOLLOWS.
EXCEPT FOR LABEL AND SURFACES WITHIN 2 INCHES OF ANY WELD, OPERATING PARTS, FINISHED SURFACES AND ALL OTHER NOT CONCEALED STEEL PARTS SHALL BE:
THOROUGHLY CLEANED OF ALL SCALE, RUST AND DIRT PER SPECIFICATIONS OF THE STEEL STRUCTURE PAINTING COUNCIL (SSPC) "SURFACE PREPARATION SPECIFICATION NO. 3 (SP-3) POWER TOOL CLEANING"
PRIMED WITH SYNTHETIC, QUICK-DRYING, RUST-INHIBITING FERROUS METAL PRIMER GLIDDEN 5205 GLID-GUARD TANK AND STRUCTURAL PRIMER.
PAINTED WITH TWO COATS OF INTERIOR SEMI-GLOSS (DOORLESS) ALKYD ENAMEL GLIDDEN 4200 SPREAD ULTRA SEMI-GLOSS ENAMEL; COLOR SHALL BE "MASSEY FERGUSON RED" (INCLUDE 1 GALLON OF FINAL PAINT WITH SHIPMENT "TOUCH-UP")

PLEASE NOTE THE RECTANGLE AND TRIANGLE PLATES MUST FACE DOWN AND REST BETWEEN THE MEMBERS OF THE STRONGBACK.

APPROX. WT. = 5400 LBS.

ITEM NO.	PART NO	DESCRIPTION OR SIZE	QTY. REQ.
19	MB-384184	PLATE, REAR BOLTING	2
18	COML	BOLT, 3/4-10UNC x 7 LG. HX HD, ASTM A325 TYPE 1	4
17	COML	ROLLER, OT, HILMAN #5-OT. CAP 3 TONS	2
16	COML	BOLT, 1/2-13UNC x 2 LG. HX HD ASTM A325 TYPE 1	12
15	COML	WASHER, FLAT 1/2, FOR 1/2 BOLT ASTM F436 HARDENED	12
14	COML	NUT, 1/2-13UNC-2B HX HD ASTM A194 GRADE 2	12
13	COML	BOLT, 3/4-10UNC x 8 1/2 LG. HX HD, ASTM A325 TYPE 1	8
12	MC-384178	CLAMPING DEVICE ASSEMBLY	2
11	COML	SHIVEL HOIST RING, 1 1/2-6 UNC BOLT, 24000 LB. CAPACITY, 2.7" SHANK, WABASTER-CAMP P/N 2A22170	1
10	MC-384158	PLATE	1
9	COML	WASHER, FLAT 3/4, FOR 3/4 BOLT ASTM F436 HARDENED	36
8	COML	NUT, 3/4-10UNC-2B HX HD ASTM A194 GRADE 2	36
7	COML	BOLT, 3/4-10UNC x 7-1/2 LG. HX HD ASTM A325 TYPE 1	24
6	COML	PIN, NECK, ZINC PLATED STL, WIRE Ø.243 5" LG WABASTER-CAMP P/N 3A2134A110	2
5	MB-384126	PIN-ROLLER PIVOT	2
4	MC-384123	HILMAN ROLLER PIVOT WELDMENT	2
3	MC-384122	PLATE	2
2	MC-384118	PIVOT WELDMENT	2
1	ME-384094	STRONGBACK FIXTURE WELDMENT	1

PARTS LIST

UNLESS OTHERWISE SPECIFIED	DESIGNER	I. FANG — AUG99
DIM / ANG / ANGLES	DRAWN	VIC MAJDANSKI — 17AUG99
± — / ± / ± —	CHECKED	C. NILA — 09-09-99
	APPROVED	INGRID FANG — 09-09-99
1. BREAK ALL SHARP EDGES .010 MAX. 2. DO NOT SCALE DRAWING. 3. DIMENSIONS TO BE ACCURATE TO MIL-STD-100 4. ALL DIMENSIONS ARE IN INCHES	USED ON	
✓ DIMS. ALL MACHINED SURFACES	MATERIAL	SEE PARTS LIST

FERMI NATIONAL ACCELERATOR LABORATORY
UNITED STATES DEPARTMENT OF ENERGY

PPD/MECHANICAL SUPPORT
MINOS-NEAR DETECTOR
STRONGBACK FIXTURE ASSEMBLY

SCALE	DRAWING NUMBER	SHEET NO	REV
1/8	9213.3	1 OF 1	A

Plotted by ing on 13-Jun-00. File 'toolest.pf'

[redacted] Design the welds on the steel plates [redacted]

i). Horizontal position — plates up side down.

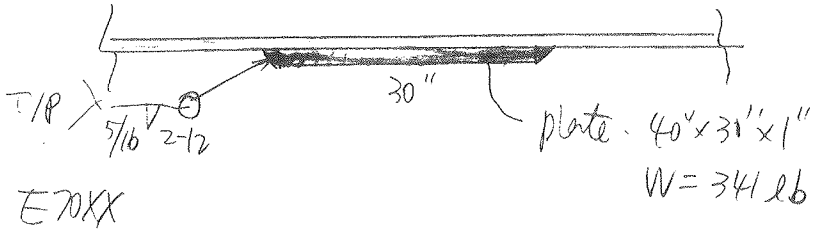

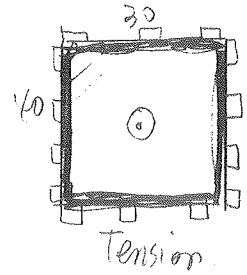

$$f_x = \frac{P_x}{A_w} \quad \text{where } P_x = W = 341\,lb$$

$$A_w = (2\times3\times2)+(2\times40\times2) = 28\ in$$

$$f_x = \frac{341}{28} = 12.17\ lb/in$$

According to AISC, ASD, page 5-67, Table J2.4, knowing, the minimum size of fillet welds is 5/16".

According to AISC, ASD, page 5-70, Table J2.5, knowing, the allowable stress on welds is the same as base metal.

According to ANSI/ASME, B30.20-1993, Below the Hook Lifting Devices, knowing, the allowable stress is equal to 1/3 Fy.

where $F_y = 30\ ksi$ for SAE 1006

$$1/3 F_y = \frac{1}{3}\times30 = 10\ ksi$$

Therefore, the allowable load in kips/in is equal to

$$10 \times 0.707 \times 5/16 = 2.2 \text{ kip/in}.$$

The safety factor on welds is

$$SF = \frac{2200}{12.17} = 181$$

ii) Vertical position

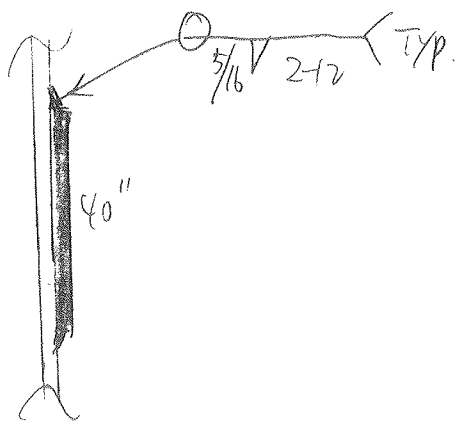

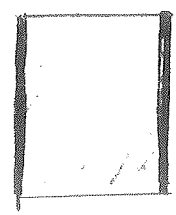

↓ shear

$$f_v = \frac{P_v}{A_W} \quad \text{where } P_v = 341 \text{ lb}$$

$$A_W = (2 \times 4 \times 2) = 16 \text{ in}$$

$$f_v = \frac{341}{16} = 21.31 \text{ lb/in}$$

According to AISC, ASD, page 5-70, Table J2.5, known, the allowable shear on welds is equal to

0.30 × nominal tensile strength of weld metal

$= 0.30 \times 70 = 21$ ksi

According to ANSI/ASME, B30.20-1993, Below the Hook Lifting Devices, known the allowable shear stress is equal to $\frac{1}{3}F_y$

where $F_y = 30$ ksi for SAE 1006

$$\frac{1}{3}F_y = \frac{1}{3} \times 30 = 10 \text{ ksi}$$

Therefore, the allowable loads in kips/in is equal to $10 \times 0.7071 \times 5/16 = 2.2$ kips/in

The safety factor on welds

$$SF = \frac{2.2}{0.0213} = 104$$

Design the welds on the steel plates 20"x40"x1"

i) Horizontal position — plates upside down

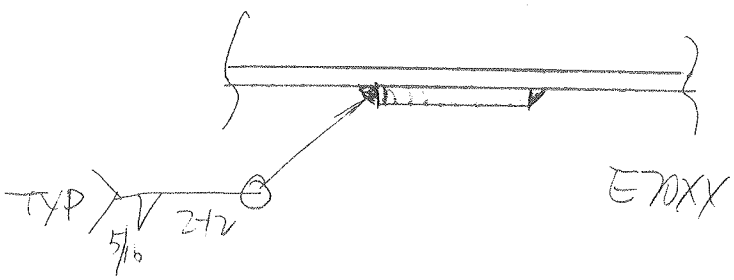

$$f_x = \frac{P_x}{A_w}$$ where $P_x = W = 114$ lb

$A_w = (3\times2)+(1\times2)+(3\times2) = 14$ in

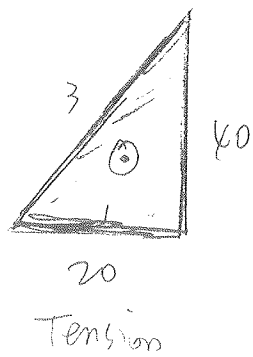

$$f_x = \frac{114}{14} = 8.14 \text{ lb/in}.$$

From the previous study, knowing the allowable load is equal to 2.2 kips/in

Therefore, the safety factor is

$$SF = \frac{2.2\times10^3}{8.14} = 270$$

ii) Vertical position:

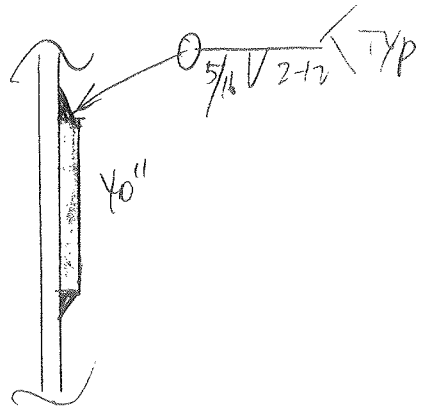

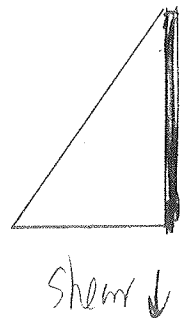

$$f_v = \frac{P_v}{A_w} \quad \text{where} \quad P_v = 114 \text{ lb}$$

$$A_w = 3 \times 2 = 6 \text{ in}$$

$$f_v = \frac{114}{6} = 19 \text{ lb/in}$$

From the previous study, knowing the allowable shear is equal to 2.2 kip/in

Therefore, the safety factor is

$$SF = \frac{2.2}{19 \times 10^{-3}} = 116$$

In conclusion, the inlets design is adequate.

~~FIND THE TEST LOAD PLATE CG.~~

Build the test load plate in ideas 3D model.

Find the combined CG location.

The result is shown below.

$$CG(Y, Z) = (-77.63,\ 0.75)$$

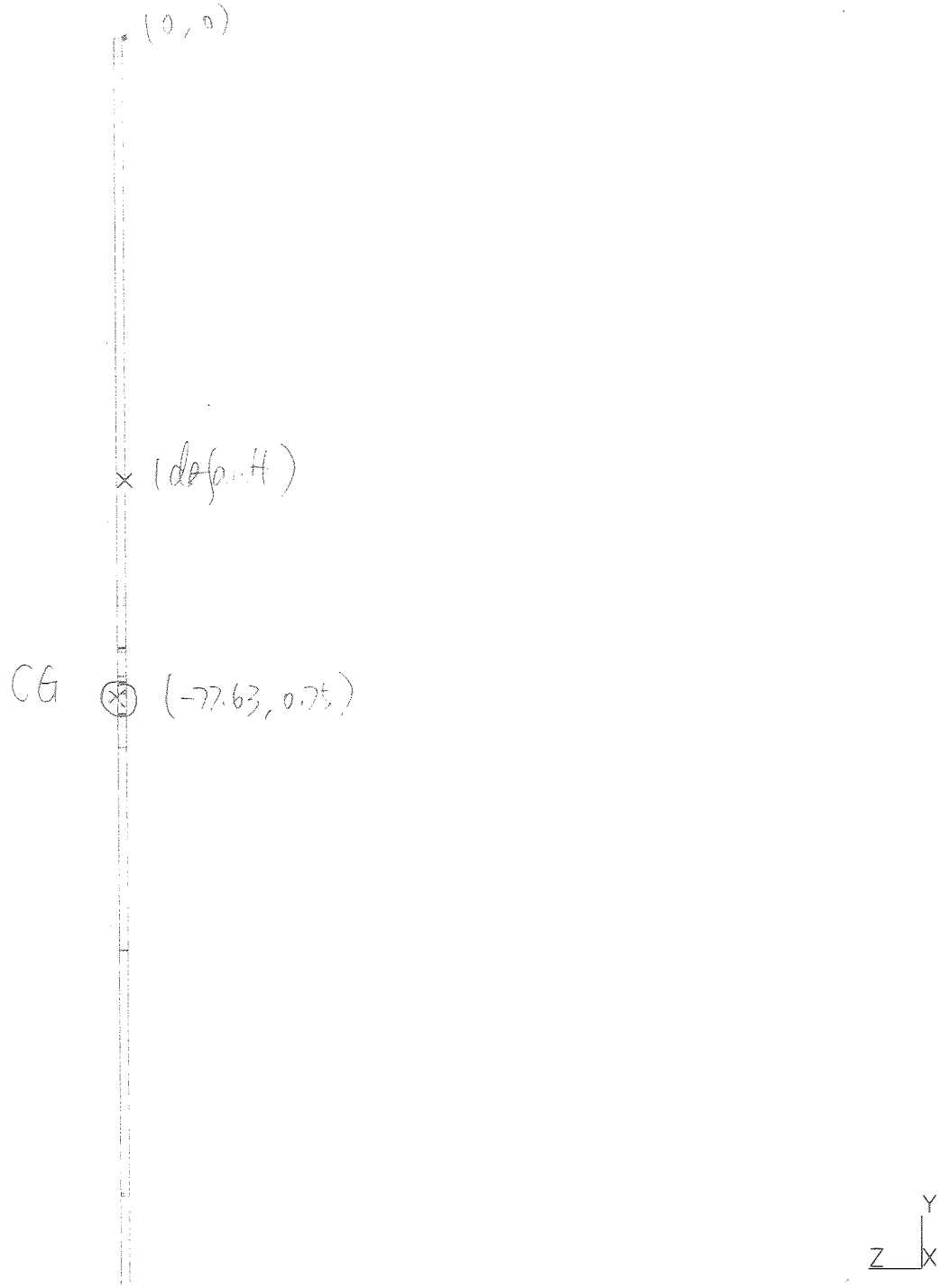
(0, 0)
(defpoint)
CG
(-77.63, 0.75)
Y
Z
X

[redacted] FIND THE CENTER GRAVITY POINT WITH TEST LOAD AND [redacted]

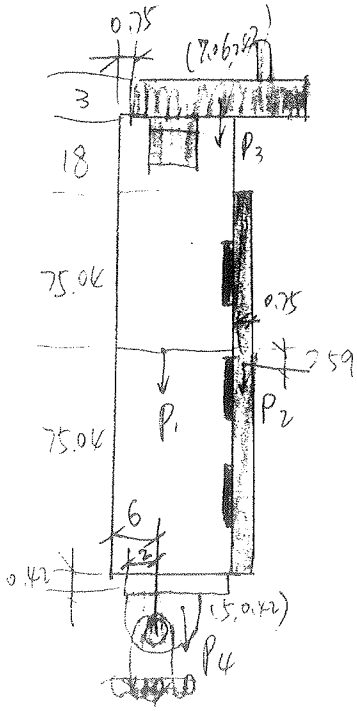

$P_1 = 4496$ lb

$P_2 = 10025.9$ lb

$P_3 = 386$ lb

$P_4 = 470$ lb

$\Sigma P = P_1 + P_2 + P_3 + P_4 = 15377.9$ lb

$\Sigma M_y = (P_1 \times 6) + (P_2 \times 12.25) + (P_3 \times 7.81) + (P_4 \times 9)$

$= (4496 \times 6) + (10025.9 \times 12.25) + (386 \times 7.81) + (470 \times 9)$

$= 157039.16$

$$Y = \frac{\Sigma M_y}{\Sigma P} = \frac{157039.16}{15377.9} = 10.21 \text{ in}$$

$\Sigma M_z = [P_1 \times (75.04 + 21)] + [P_2 \times (75.04 + 21 + 2.59)] + [P_3 \times 2.47] + [P_4 \times (50.08 + 21 + 0.42)]$

$= [4496 \times 96.04] + [10025.9 \times 98.63] + [386 \times 2.47] + [470 \times 171.5]$

$= 1502208.777$ lb-in

$\Sigma M_z = \Sigma P \, Z$

$$Z = \frac{\Sigma M_z}{\Sigma P} = \frac{1502208.777}{15377.9} = 97.68 \text{ in}$$

~~FIND THE LIFTING UP ANGLE~~

From the ideas results, knowing, when the pick up point fully extended, the lifting up angle is 21°

see the diag. below

Since the test load plate will not tip off, that means the plate always will rest on the strong back. the plate bending stress can be ignored.

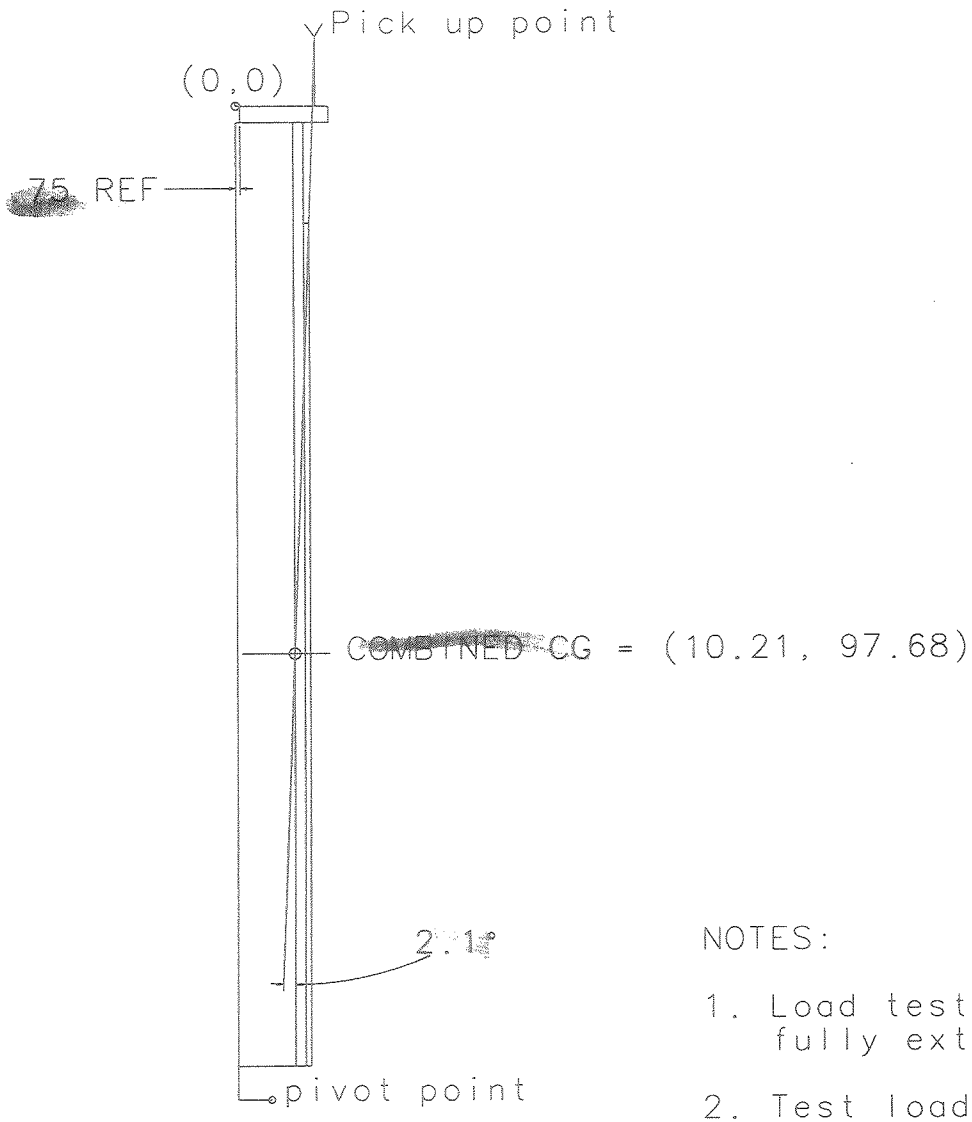

NOTES:

1. Load test with pickup point fully extended

2. Test load =10026 Lbs

○ SURVEY THE FLATNESS ON THE TEST PLATE.

Summary:

- ONE EAR DOWN 0.651"
- THE OTHER EAR UP 0.076"
- PLATE IS HIGH IN THE MIDDLE FROM 0.3~0.9"
- TOP EDGE BOWS OUT FROM 0.3 ~ 0.5"

○ RECALCULATE THE LIFTING ANGLE DUE TO LARGE VARIATION ON PLATE FLATNESS

ASSUME PLATE CG MOVE OUT 0.9"

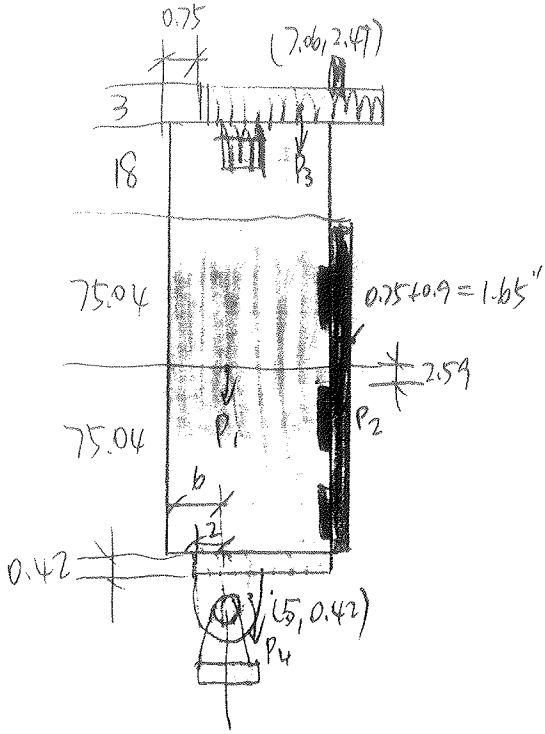

$P_1 = 4496 lb$

$P_2 = 10075.9 lb$

$P_3 = 386 lb$

$P_4 = 470 lb$

$\Sigma P = P_1 + P_2 + P_3 + P_4$

$= 15377.9 lb$

$$\Sigma M_y = (P_1 \times 6) + (P_2 \times 13.65) + (P_3 \times 7.81) + (P_4 \times 9)$$

$$= (449 \times 6) + (10025.9 \times 13.65) + (386 \times 7.81) + (470 \times 9)$$

$$= 171075.56 \text{ lb-in}$$

$$y = \frac{\Sigma M_y}{\Sigma P} = \frac{171075.56}{15377.9} = 11.124 \text{ in}$$

$$\Sigma M_z = [P_1 + (75.04 + 21)] + [P_2 \times (75.04 + 21 + 2.59)]$$

$$+ [P_3 \times 2.47] + [P_4 \times (50.08 + 21 + 0.47)]$$

$$= [449 \times 96.04] + [10025.9 \times 98.63]$$

$$+ [386 \times 2.47] + [470 \times 71.5]$$

$$= 1502208.777 \text{ lb-in}$$

$$\Sigma M_z = \Sigma P \, z$$

$$z = \frac{\Sigma M_z}{\Sigma P} = \frac{1502208.777}{15377.9} = 97.68 \text{ in}$$

Therefore, combined CG = (11.124, 97.68)

o FIND THE LIFTING ANGLE FOR THE BOWED TEST PLATE

From Ideas results, knowing:

$$\alpha = 1.6^\circ$$

$$\alpha_{point} = 2.5^\circ.$$

That means, when the strongback is being lifted off the floor, lifting angle will change from 2.5° to 1.6°.

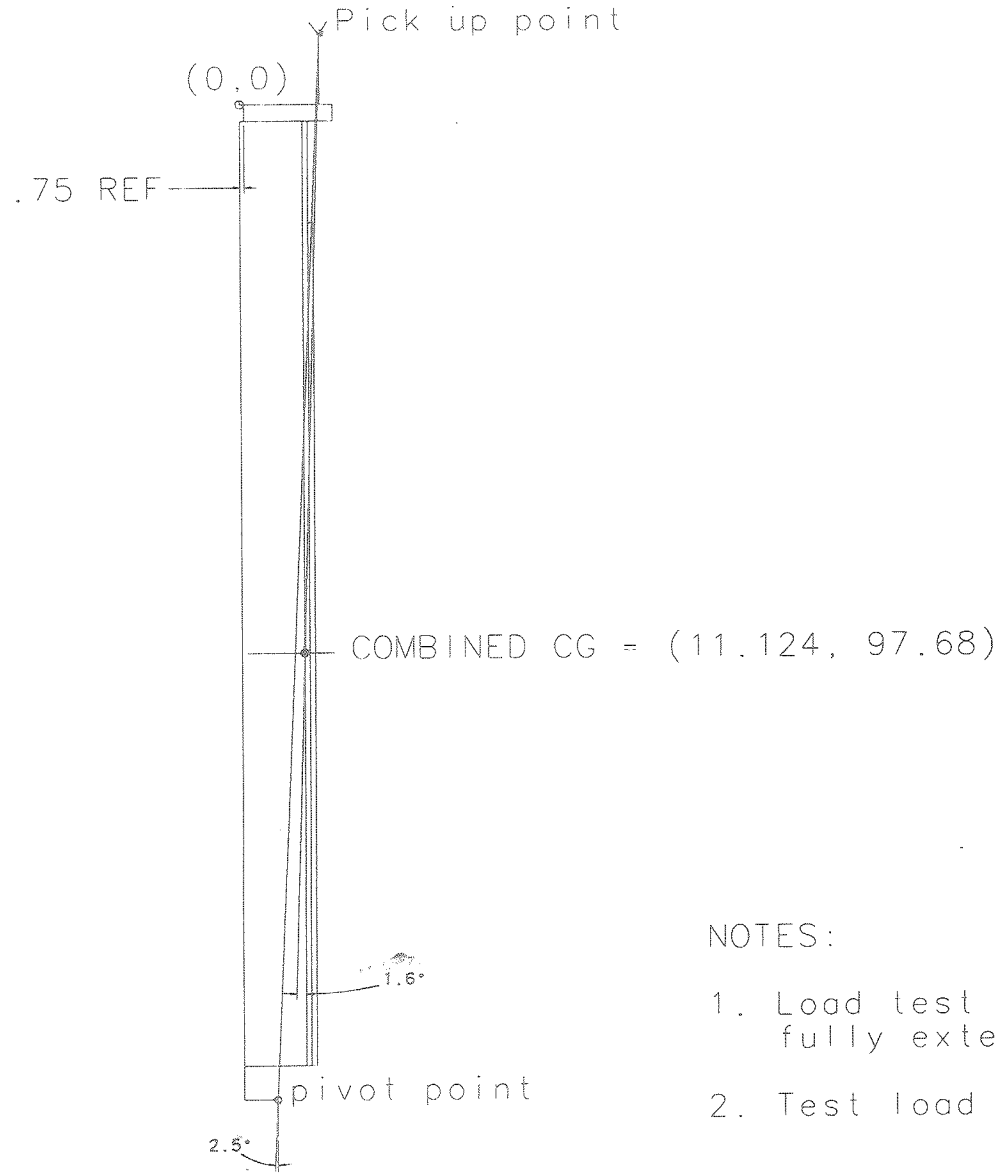

NOTES:

1. Load test with pickup point fully extended
2. Test load =10026 Lbs

REV	DESCRIPTION	DRAWN / APPROVED	DATE
A	REVISED CLAMPING DEVICE ASSEMBLY IN VIEW A-A TO SHOW 3/4-UNRC BOLT W/S.S. SEVE INSTEAD OF SHOULDER BOLT	B. CYKO	09-30-99

~~FLATNESS ON TEST PLATE~~

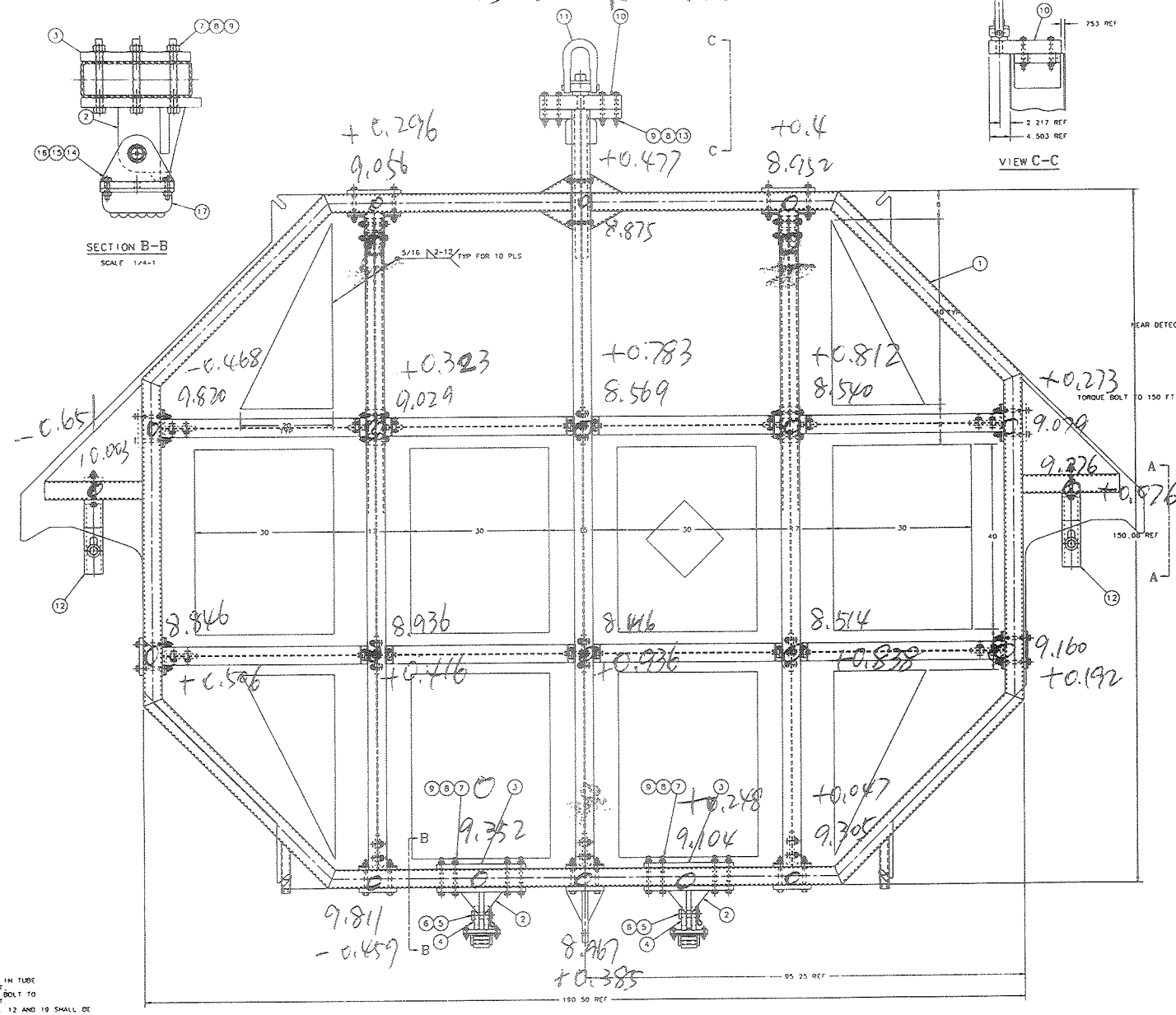

PLEASE NOTE THE RECTANGLE AND TRIANGLE PLATES MUST FACE DOWN AND REST BETWEEN THE MEMBERS OF THE STRONGBACK.

NOTES:

1. TORQUE THROUGH BOLTS IN TUBE CONNECTIONS 110 LB-FT.
2. TIGHTEN HOIST RING BOLT TO A TORQUE OF 800 LB-FT.
3. ITEMS 2, 3, 4, 5, 10, 12 AND 19 SHALL BE PAINTED AS FOLLOWS
   EXCEPT FOR LABEL AND SURFACES WITHIN 2 INCHES OF ANY WELD, OPERATING PARTS, FINISHED SURFACES AND ALL OTHER NOT CONCEALED STEEL PARTS SHALL BE:
   THOROUGHLY CLEANED OF ALL SCALE, RUST AND DIRT PER SPECIFICATIONS OF THE STEEL STRUCTURE PAINTING COUNCIL (SSPC) "SURFACE PREPARATION SPECIFICATION NO. 3,(SP-3) POWER TOOL CLEANING".
   PRIMED WITH SYNTHETIC, QUICK-DRYING, RUST-INHIBITING FERROUS METAL PRIMER GLIDDEN 5205 GLID-GUARD TANK AND STRUCTURAL PRIMER.
   PAINTED WITH TWO COATS OF INTERIOR, SEMI-GLOSS, ODORLESS, ALKYD ENAMEL GLIDDEN 4200 SPREAD ULTRA SEMI-GLOSS ENAMEL. COLOR SHALL BE "MASSEY FERGUSON RED". INCLUDE 1 GALLON OF FINAL PAINT WITH SHIPMENT (FOR TOUCH-UP).

ITEM NO	PART NO	DESCRIPTION OR SIZE	QTY. REQ.
19	MD-384184	PLATE, REAR BOLTING	2
18	COML	BOLT, 3/4-10UNC x 7 LG. HX HD. ASTM A325 TYPE 1	4
17	COML	ROLLER, OT. HILMAN #5-OT. CAP 5 TONS	2
16	COML	BOLT, 1/2-13UNC x 2 LG. HX HD ASTM A325 TYPE 1	12
15	COML	WASHER, FLAT 1/2, FOR 1/2 BOLT ASTM F436 HARDENED	12
14	COML	NUT, 1/2-13UNC-2B HX HD ASTM A194 GRADE2	12
13	COML	BOLT, 3/4-10UNC x 8 1/2 LG HX HD. ASTM A325 TYPE 1	8
12	MC-384178	CLAMPING DEVICE ASSEMBLY	2
11	COML	SWIVEL HOIST RING, 7 1/2-8 UNC BOLT, 21000 LB. CAPACITY. 2.7:1 SHARK. McMASTER-CARR P/N 3063274	1
10	MC-384158	PLATE	1
9	COML	WASHER, FLAT 3/4, FOR 3/4 BOLT ASTM F436 HARDENED	36
8	COML	NUT, 3/4-10UNC-2B HX HD ASTM A194 GRADE2	36
7	COML	BOLT, 3/4-10UNC x 7-1/2 LG HX HD. ASTM A325 TYPE 1	24
6	COML	PIN, HAIR, ZINC PLATED STL PIRC # 243 5" LG. McMASTER-CARR P/N 8633A414	2
5	MD-384126	PIN-ROLLER PIVOT	2
4	MC-384123	HILMAN ROLLER PIVOT WELDMENT	2
3	MC-384122	PLATE	2
2	MC-384118	PIVOT WELDMENT	2
1	MC-384094	STRONGBACK FIXTURE WELDMENT	1

PARTS LIST

UNLESS OTHERWISE SPECIFIED	DESIGNATOR	I. FANG	AUG99
XX ± XXX ± ANGLES ±	DRAWN	VIC MAJDANSKI	27AUG99
	CHECKED	C. NILA	09-09-99
1. BREAK ALL SHARP EDGES 0.12 MAX. 2. DO NOT SCALE DRAWING 3. DIMENSIONS IN BRACKETS ARE IN MM 4. ALL DIMENSIONS ARE IN INCHES.	APPROVED	INGRID FANG	09-09-99
	USED ON		
MAKE ALL MACHINED SURFACES	MATERIAL	SEE PARTS LIST	

FERMI NATIONAL ACCELERATOR LABORATORY
UNITED STATES DEPARTMENT OF ENERGY

PPD/MECHANICAL SUPPORT
MINOS-NEAR DETECTOR
STRONGBACK FIXTURE ASSEMBLY

SCALE	DRAWING NUMBER		SHEET NO	REV
1/8	9213..	384185	1 OF 1	A

APPROX. WT. - 5400 LBS

Plotted by jmy on 18-Jun-00 . File toodlest.plt

DESIGN THE CLAMPING POINT

Assume, 2 clamping points will be added on the top frame.

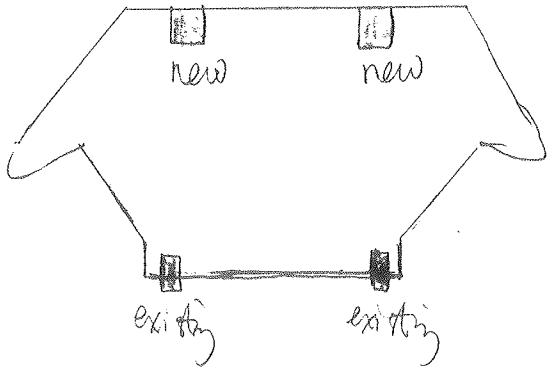

when the plate is in upside down position and 4 points supported, load at each support point is equal to

$$f = \frac{1}{4}P \quad \text{where } P = 10026 \text{ lbs}$$
$$= \frac{1}{4} \times 10026 = 2506.5 \text{ lbs.}$$

According to AISC, ASD, A4, Page 5-29, knowing the impact load = live load = 10026 lbs

Therefore, the impact load at each support point is equal to

$$f_{impact} = \frac{1}{4}P = \frac{1}{4} \times 10026 = 2506.5 \text{ lbs}$$

The total load at each support point is equal to

$$f_{total} = f + f_{impact}$$
$$= 2506.5 + 2506.5 = 5013 \text{ lb}$$

[redacted] THE BENDING STRESS ON THE EXISTING SUPPORTS.

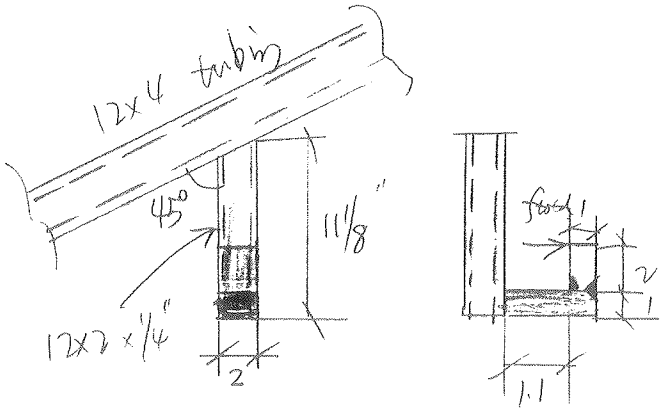

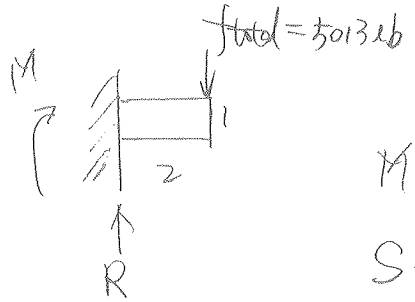

Bending Moment:

$$M = 5013 \times 2 = 10026 \text{ lb-in}$$

$$S = \frac{bh^2}{6} = \frac{2 \times 1^2}{6} = 0.33 \text{ in}^3$$

$$f_b = \frac{M}{S} = \frac{10026}{0.33} = 30.4 \text{ ksi}$$

Allowable: $F_b = \frac{1}{3} F_y = \frac{1}{3} \times 36 = 12 \text{ ksi}$

Since $f_b > F_b$, more supports will be needed.

Assume 2 more supports will be added on the bottom. Therefore, total of 6 supports will be used.

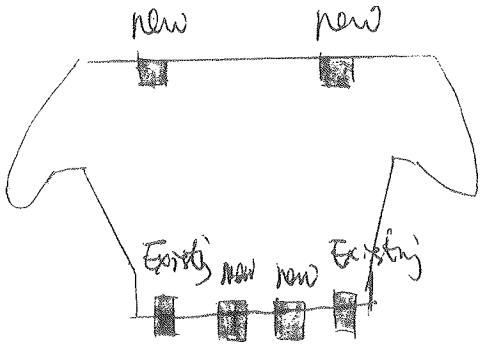

1). Concentrated load $10026 \times 2 = 20052$ lb

Top

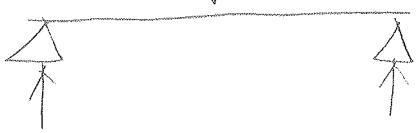

$R_1 = R_2 = \frac{1}{2} \times 20052 \text{ lb} = 10026 \text{ lb}$

Bottom

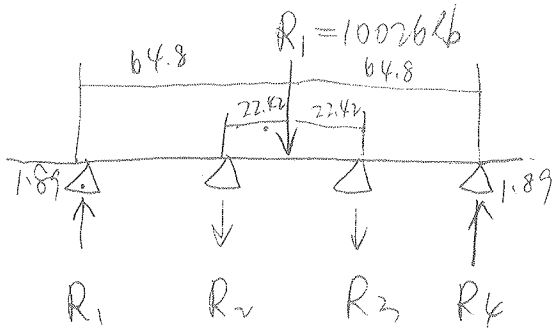

From CASEE program, knowing:

$R_1 = 813$ lb

$R_2 = 5820$ lb

$R_3 = 5820$ lb

$R_4 = 813$ lb.

2). uniform load

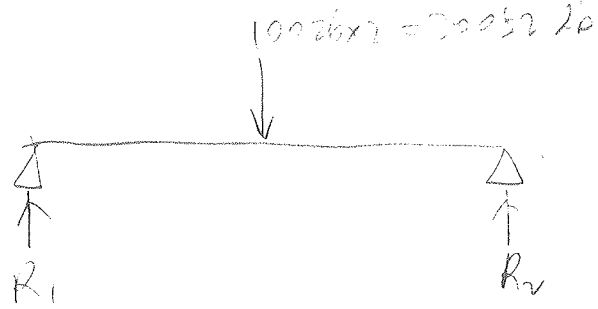

$R_1 = R_2 = \frac{1}{2} \times 20052\,lb = 10026\,lb$

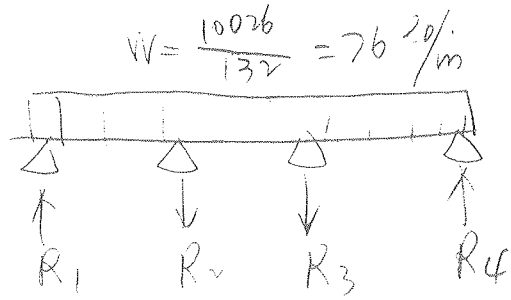

From CASEE Program, knowing:

$R_1 = 1270\,lb$ (governs)
$R_4 = 1270\,lb$

$R_2 = 3650\,lb$

$R_3 = 3650\,lb$

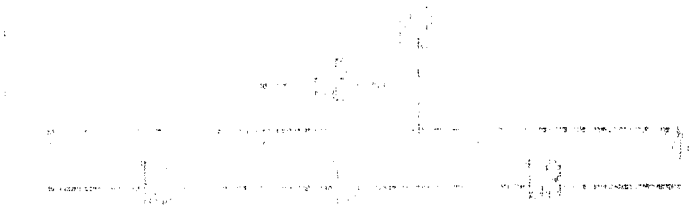

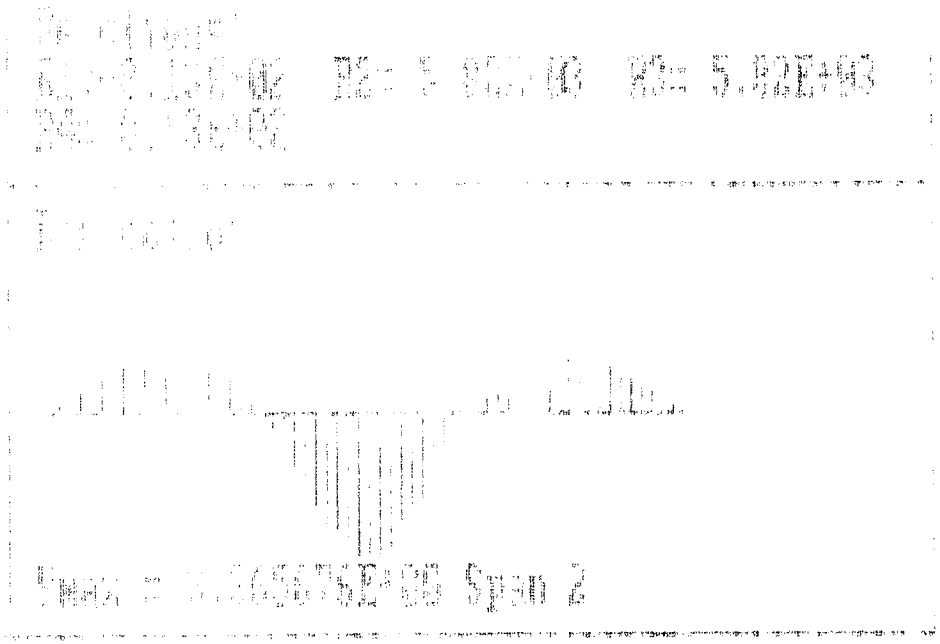
Span 2

[illegible] Span Beam Under Transverse [illegible]

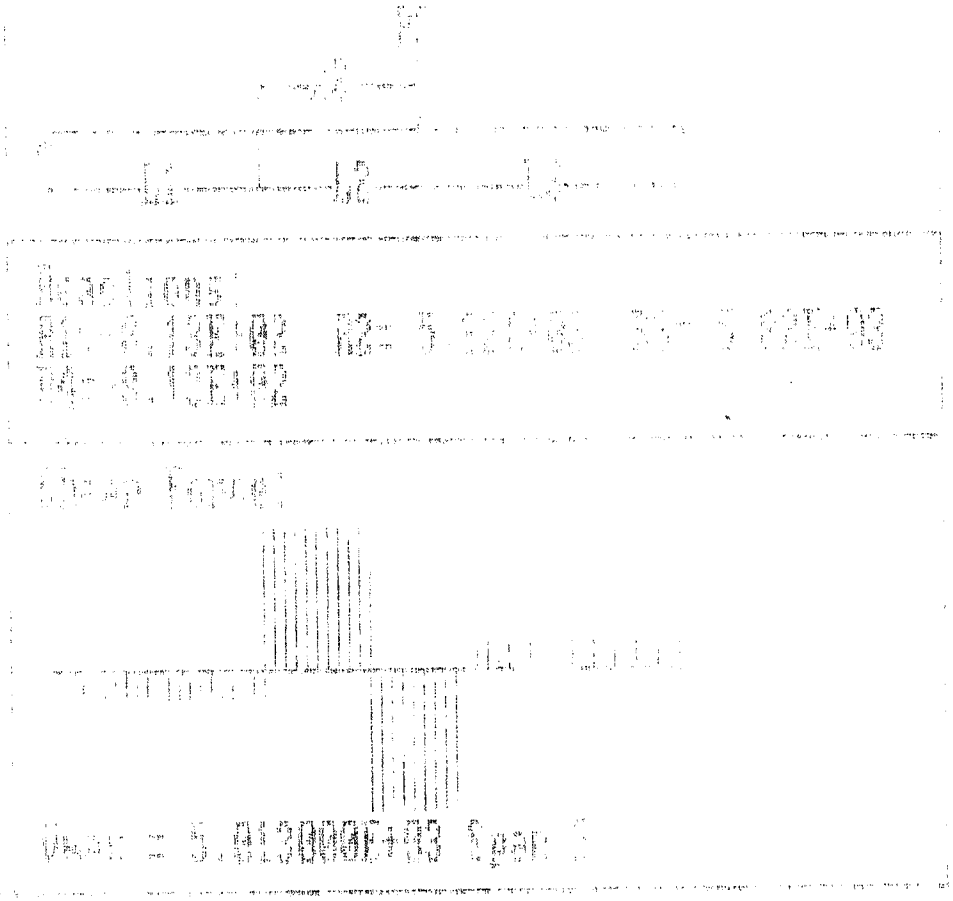

[illegible] DIAGRAM OF
[illegible] CONDITION MEMB
[illegible] TYMENO [illegible]

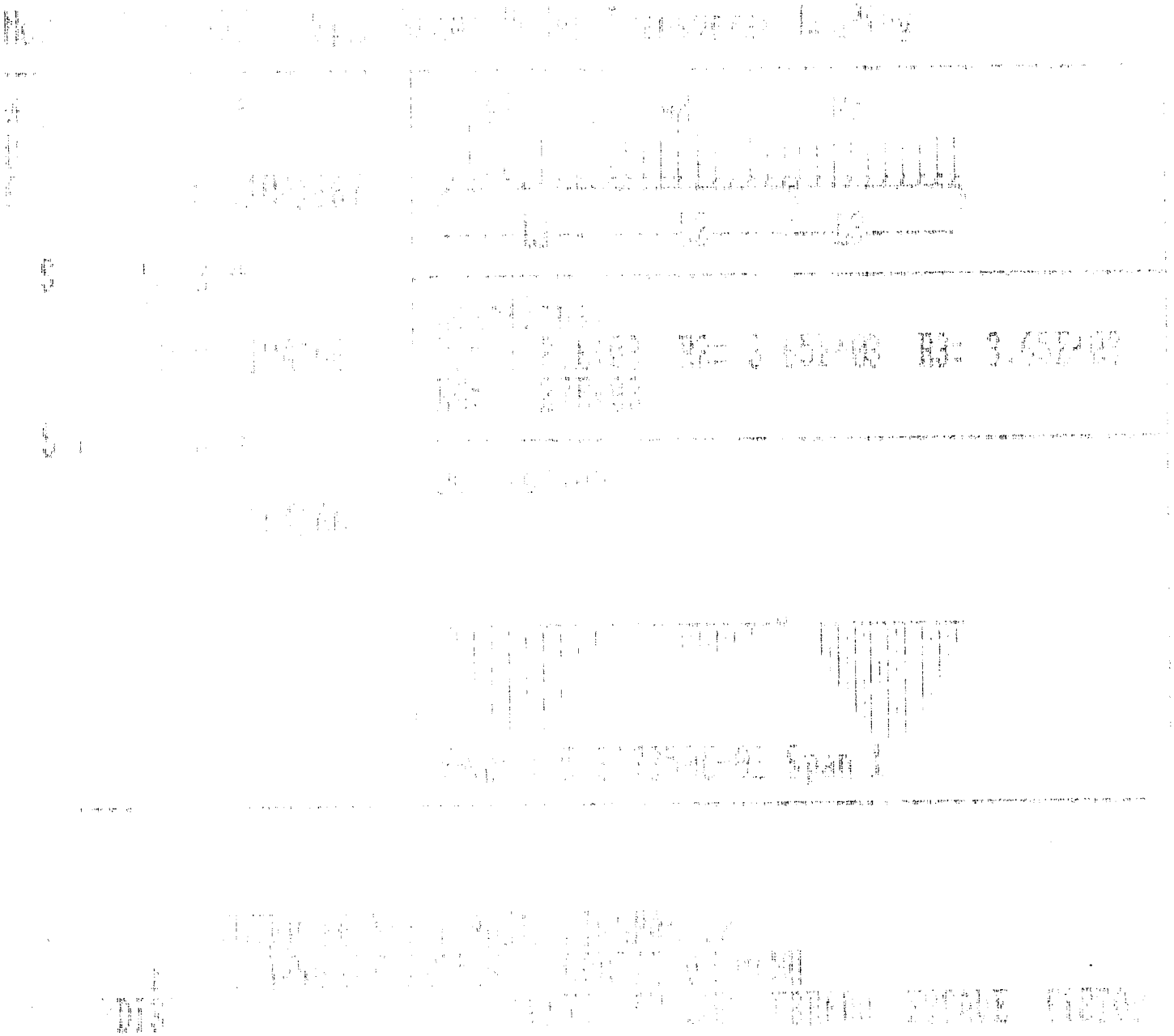

○ [redacted] STRESS ON THE EXISTING SUPPORTS

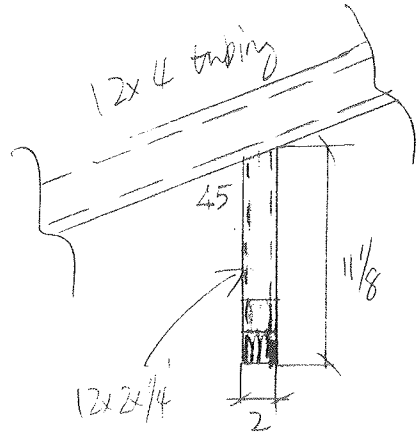

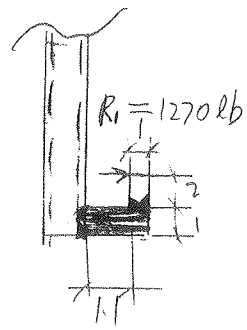

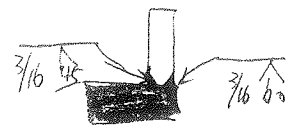

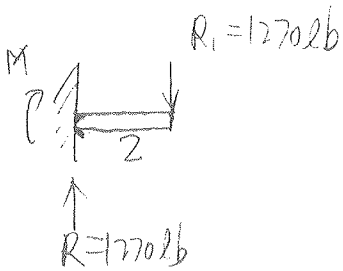

Bending Moment M

$M = 1270 \times 2 = 2540$ lb-in

$S = \frac{bh^2}{6} = \frac{2 \times 1^2}{6} = 0.33 \text{ in}^3$

$f_b = \frac{M}{S} = \frac{2540}{0.33} = 7.7$ ksi

$F_b = \frac{1}{3} F_y = \frac{1}{3} \times 36 = 12$ ksi

$SF = \frac{F_b}{f_b} = \frac{12}{7.7} = 1.6$

welds

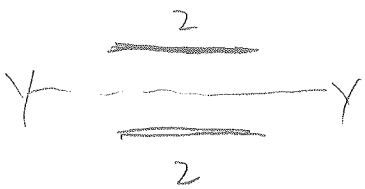

bending

bending

$S_w = bd$

where $b = 2$ in

$d = 1$ in

$S_w = 2 \times 1 = 2 \text{ in}^2$

shear:

$f_v = \frac{R}{A_w} = \frac{1270}{2 \times 2} = 317.5$ lb/in

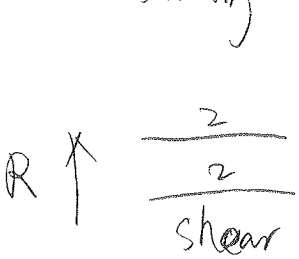

bending: $f_{bw} = \frac{M}{S_w}$ where $M = 2540$ lb-in

$S_w = 2 \text{ in}^2$

$$f_{bw} = \frac{2540}{2} = 1270 \text{ lb/in}$$

$$f_b = \sqrt{f_{bw}^2 + f_v^2} = \sqrt{1270^2 + 3175^2} = 1300 \text{ lb/in} = 1.300 \text{ kips/in}$$

Allowable:

$$F_b = 0.707 \times 3/16 \times 12 = 1.59 \text{ kips/in}$$

$$SF = \frac{1.59}{1.309} = 1.2$$

Therefore, the weld can take the load

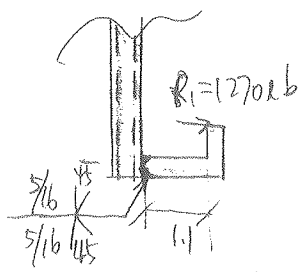

Bending moment M

$$M = 1270 \times 2.5 = 3175 \text{ lb-in}$$

$$S = \frac{bh^2}{6} = \frac{2 \times 1^2}{6} = 0.33 \text{ in}^3$$

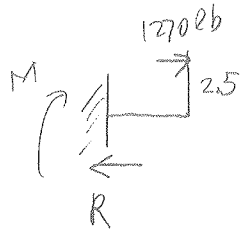

$$f_b = \frac{M}{S} = \frac{3175}{0.33} = 9.6 \text{ ksi}$$

Allowable $F_b = \frac{1}{3} F_y = \frac{1}{3} \times 36 = 12$ ksi

$$SF = \frac{12}{9.6} = 1.25$$

Welds

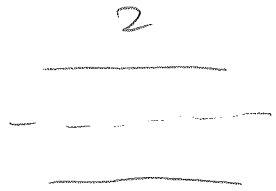

bending & shear

Welding: bending

$S_w = bd$

where $b = 2$ in

$d = 1$ in

$S_w = 2 \times 1 = 2 \text{ in}^2$

Shear: $f_v = \frac{R}{\Sigma S_w} = \frac{1270}{4} = 317.5$ lb/in

bending $f_{bw} = \frac{M}{S_w}$ where $M = 3175$ lb-in

$S_w = 2 \text{ in}^2$

$f_{bw} = \frac{3175}{2} = 1587.5$ lb/in $\quad f_b = \sqrt{f_{bw}^2 + f_v^2} = \sqrt{1587.5^2 + 317.5^2}$

$= 1.62$ kips/in

Allowable

$F_{bw} = 0.707 \times 5/16 \times 12 = 2.65$ kips/in

$SF = \frac{2.65}{1.62} = 1.6$

Therefore, the weld can take the load.

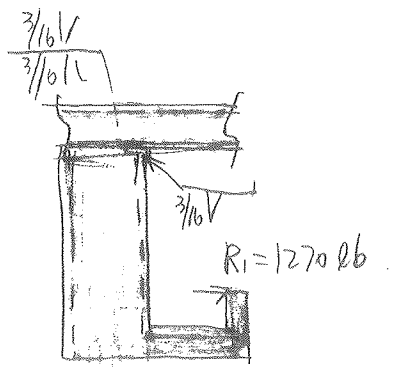

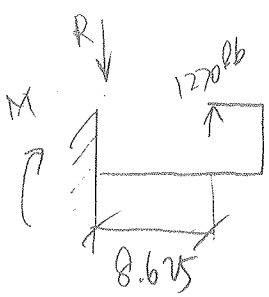

Bending Moment

$M = 1270 \times 8.625 = 10.953$ kips-in

$S_x = \frac{bh^2}{6}$ where $b = 2$ in

$h = 12$ in

$S_x = \frac{2 \times 12^2}{6} = 48 \text{ in}^3$

$f_b = \frac{M}{S_x} = \frac{10.953}{48} = 0.23$ ksi

Allowable $F_b = \frac{1}{3} F_y = \frac{1}{3} \times 36 = 12$ ksi

$SF = \frac{12}{0.23} = 52$

Welds:

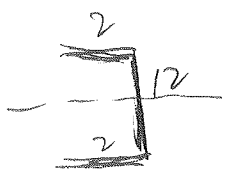

bending

bending:

$$S_W = bd + \frac{d^2}{6} \quad \text{where } b = 2\text{in}, d = 12\text{in}$$

$$S_W = 2 \times 12 + \frac{12^2}{6} = 48 \text{ in}$$

$$f_{bw} = \frac{M}{S_W} = \frac{10953}{48} = 228.18 \text{ lb/in}$$

shear:

$$f_v = \frac{R}{A_W} = \frac{1270}{12} = 105.83 \text{ lb/in}$$

Combined stress

$$f = \sqrt{f_{bw}^2 + f_v^2}$$

$$= \sqrt{228.18^2 + 105.83^2}$$

$$= 251.5 \text{ lb/in}$$

Allowable stress:

$$F_{bw} = 0.707 \times 3/16 \times 12 = 1.59 \text{ kips/in}$$

Therefore, the safety factor

$$SF = \frac{1.59}{0.2515} = 6$$

In conclusion, the existing support lip design is adequate to carry the design load.

REV.	DESCRIPTION	DRAWN / APPROVED	DATE / DATE
A	REVISED CLAMPING DEVICE ASSEMBLY IN VIEW A-A TO SHOW STANDARD BOLT w/SLEEVE INSTEAD OF SHOULDER BOLT	B. CYKO	09-28-99

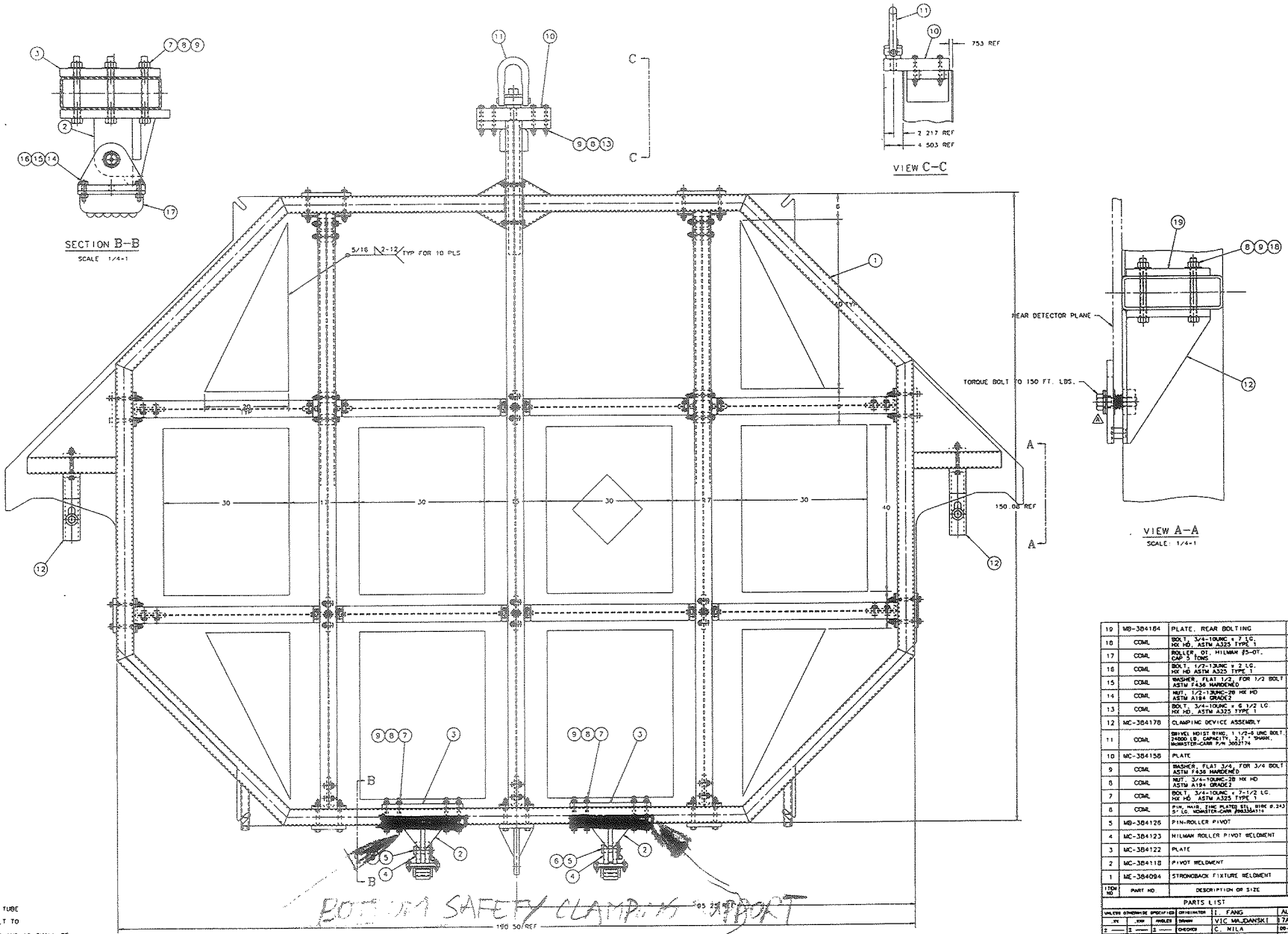

PLEASE NOTE THE RECTANGLE AND TRIANGLE PLATES MUST FACE DOWN AND REST BETWEEN THE MEMBERS OF THE STRONGBACK.

NOTES:

1- TORQUE THROUGH BOLTS IN TUBE CONNECTIONS 110 LB-FT
2- TIGHTENEN HOIST RING BOLT TO A TORQUE OF 800 LB-FT
3- ITEMS 2 3 4 5 10 12 AND 19 SHALL BE PAINTED AS FOLLOWS
EXCEPT FOR LABEL AND SURFACES WITHIN 2 INCHES OF ANY WELD, OPERATING PARTS, FINISHED SURFACES AND ALL OTHER NOT CONCEALED STEEL PARTS SHALL BE
THOROUGHLY CLEANED OF ALL SCALE, RUST AND DIRT PER SPECIFICATIONS OF THE STEEL STRUCTURE PAINTING COUNCIL (SSPC) "SURFACE PREPARATION SPECIFICATION NO. 3 (SP-3) POWER TOOL CLEANING".
PRIMED WITH SYNTHETIC QUICK-DRYING, RUST-INHIBITING FERROUS METAL PRIMER GLIDDEN 5205 GLID-GUARD TANK AND STRUCTURAL PRIMER.
PAINTED WITH TWO COATS OF INTERIOR, SEMI-GLOSS, ODORLESS, ALKYD ENAMEL GLIDDEN 4200 SPREAD ULTRA SEMI-GLOSS ENAMEL COLOR SHALL BE "MASSEY FERGUSON RED" (1 GALLON OF FINAL PAINT WITH SHIPMEN "TOUCH-UP")

ITEM NO	PART NO	DESCRIPTION OR SIZE	QTY. REQ.
19	MB-384184	PLATE, REAR BOLTING	2
18	COML	BOLT, 3/4-10UNC x 7 LG. HX HD, ASTM A325 TYPE 1	4
17	COML	ROLLER, 01 HILMAN RS-OT, CAP 5 TONS	2
16	COML	BOLT, 1/2-13UNC x 2 LG. HX HD ASTM A325 TYPE 1	12
15	COML	WASHER, FLAT 1/2, FOR 1/2 BOLT ASTM F436 HARDENED	12
14	COML	NUT, 1/2-13UNC-2B HX HD ASTM A194 GRADE2	12
13	COML	BOLT, 3/4-10UNC x 6 1/2 LG HX HD, ASTM A325 TYPE 1	8
12	MC-384178	CLAMPING DEVICE ASSEMBLY	2
11	COML	SWIVEL HOIST RING, 1 1/2-6 UNC BOLT, 24000 LB. CAPACITY, 2.7" "GUSSK. MCMASTER-CARR P/N 3082174	1
10	MC-384158	PLATE	1
9	COML	WASHER, FLAT 3/4, FOR 3/4 BOLT ASTM F436 HARDENED	36
8	COML	NUT, 3/4-10UNC-2B HX HD ASTM A194 GRADE2	36
7	COML	BOLT, 3/4-10UNC x 7-1/2 LG. HX HD ASTM A325 TYPE 1	24
6	COML	PIN, HAIR, ZINC PLATED STL, WIRE Ø.243 5" LG, MCMASTER-CARR P/N 9065A514	2
5	MB-384126	PIN-ROLLER PIVOT	2
4	MC-384123	HILMAN ROLLER PIVOT WELDMENT	2
3	MC-384122	PLATE	2
2	MC-384118	PIVOT WELDMENT	2
1	ME-384094	STRONGBACK FIXTURE WELDMENT	1

PARTS LIST

UNLESS OTHERWISE SPECIFIED DIMENSIONS	ORIGINATOR	I. FANG	AUG99
.XX .XXX ANGLES	DRAWN	VIC MAJDANSKI	27AUG99
2 — 2 — 2 —	CHECKED	C. NILA	09-08-99
1. DRAW ALL SHARP EDGES TO 0.25 MAX. 2. DIMENSIONS TO BE DONE WITH AUTO TYP 26-1002 3. WT 2. 4. DIMENSIONS ARE IN INCHES.	APPROVED	INGRID FANG	09-08-99
	USED ON		
	MATERIAL	SEE PARTS LIST	
✓ MAT'L & REGISTERED ASSY DATE			

FERMI NATIONAL ACCELERATOR LABORATORY
UNITED STATES DEPARTMENT OF ENERGY

PPD/MECHANICAL SUPPORT
MINOS-NEAR DETECTOR
STRONGBACK FIXTURE ASSEMBLY

SCALE	DRAWING NUMBER		SHEET NO	REV
1/8	9213.3	384185	1 OF 1	A

APPROX WT - 5400 LBS

Plotted by im on 18-Jun-00 . File tondles1.prt

DESIGN THE NEW BOTTOM CLAMPING SUPPORTS AS A SAFETY DEVICE.

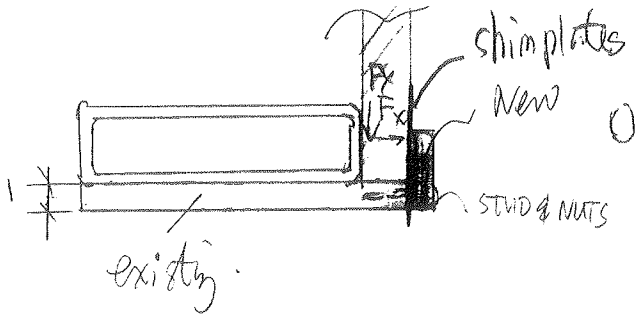

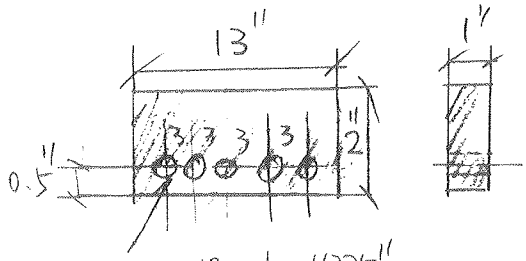

cold roll steel 1018

316 Stainless steel fully threaded stud 3/8"-16×3" Lg

316 Stainless steel Hex Nut 3/8"-16 Screw size, coarse thread 9/16" WD 21/64" Ht.

0 check shear stress

$$f_v = \frac{F}{A}$$

where $F = 3650$ lb

$A = 1 \times 13 = 13$ in

$$f_v = \frac{3650}{13} = 0.28 \text{ ksi}$$

$$\text{Allowable} = \frac{1}{3} \times F_y$$

$$= \frac{1}{3} \times 54 = 18 \text{ ksi}$$

The safety Factor on shear stress

$$SF = \frac{18}{0.28} = 64.$$

REV	DESCRIPTION	DRAWN	DATE
		APPROVED	DATE

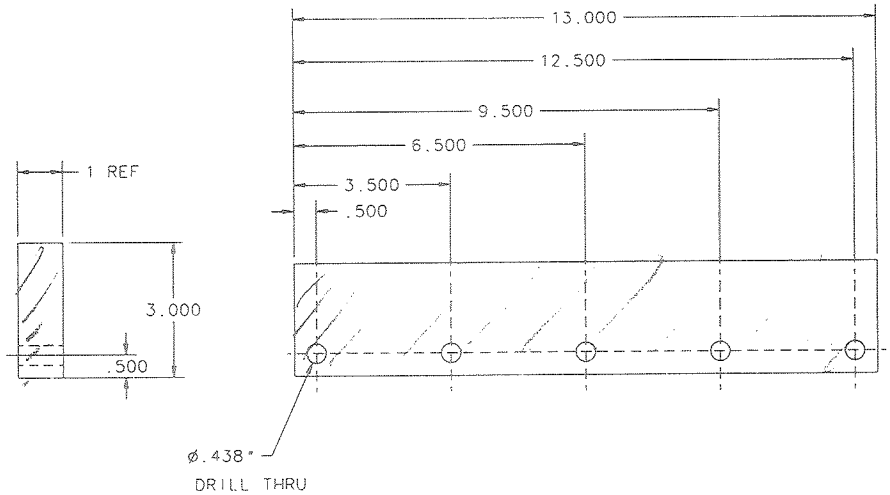

TWO REQUIRED

USE THIS PART AS A TEMPLATE
TO DRILL HOLES IN PART SHOWN
ON DRAWING 9213.300-MC-384120

ITEM NO.	PART NO.	DESCRIPTION OR SIZE	QTY. REQ.

PARTS LIST

UNLESS OTHERWISE SPECIFIED			ORIGINATOR	I. FANG	JAN 00
.XX	.XXX	ANGLES	DRAWN	I. FANG	JAN 00
±	±.015	± —	CHECKED		
			APPROVED		

1. BREAK ALL SHARP EDGES .015 MAX.
2. DO NOT SCALE DRWG.
3. DIMENSIONING IN ACCORD WITH ANSI Y14.5M-1982 STD'S.
4. ALL DIMENSIONS ARE IN INCHES.

125 MAX. ALL MACHINED SURFACES

USED ON

MATERIAL PLATE, 1 THK 1018 CRS

FERMI NATIONAL ACCELERATOR LABORATORY
UNITED STATES DEPARTMENT OF ENERGY

PPD/MECHANICAL SUPPORT

NEAR STRONGBACK LOAD TEST LOWER SUPPORT BRACKET

SCALE	DRAWING NUMBER	SHEET NO	REV
HALF		1 OF 1	

Plotted by iny on 19-Jan-00 . File loadtestclamping.pff

REV	DESCRIPTION	DRAWN	DATE
		APPROVED	DATE

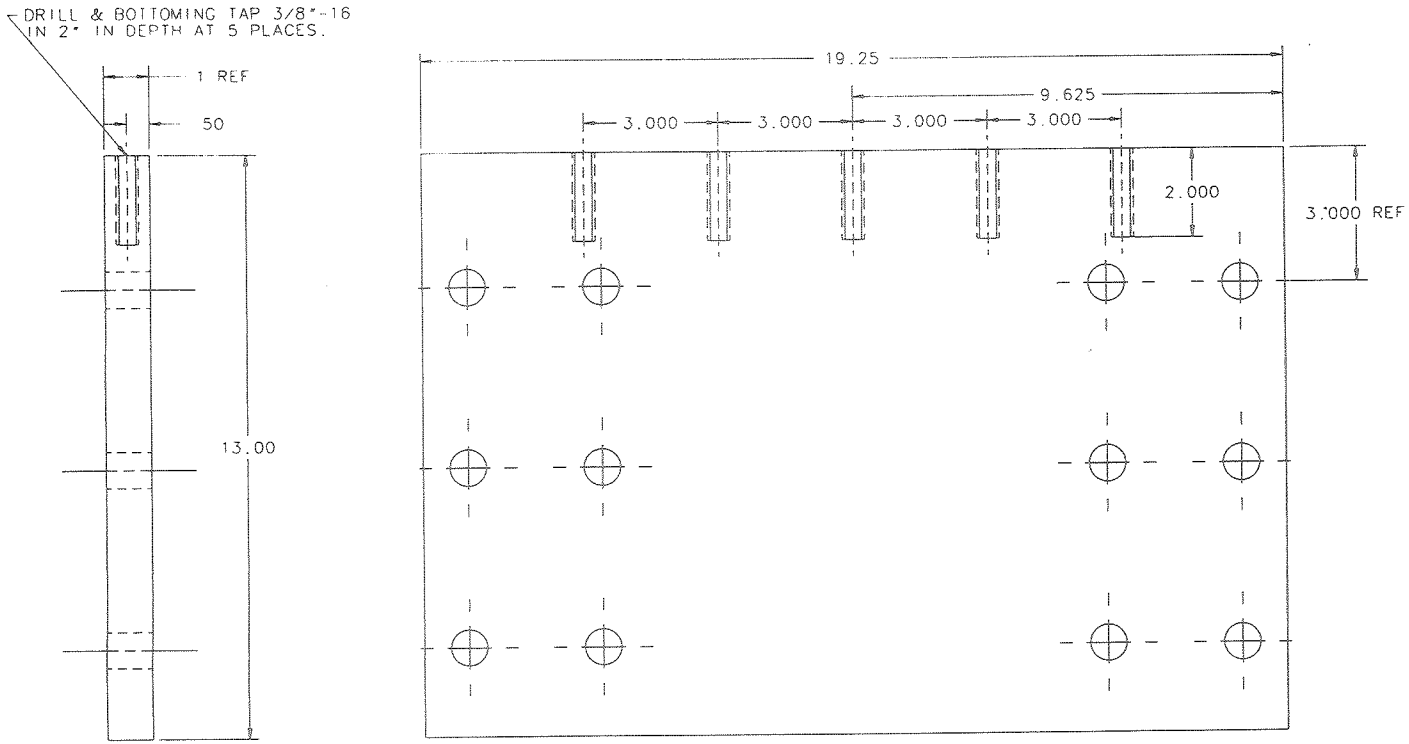

ITEM NO.	PART NO.	DESCRIPTION OR SIZE	QTY. REQ.
PARTS LIST			

UNLESS OTHERWISE SPECIFIED			ORIGINATOR	I. FANG	AUG99
.XX	.XXX	ANGLES	DRAWN	VIC MAJDANSKI	17AUG99
± .03	± .015	± ——	CHECKED		
			APPROVED		

1. BREAK ALL SHARP EDGES .015 MAX.
2. DO NOT SCALE DRWG.
3. DIMENSIONING IN ACCORD WITH ANSI Y14.5M-1982 STD'S.
4. ALL DIMENSIONS ARE IN INCHES.

125 √ MAX. ALL MACHINED SURFACES

USED ON MC-384118

MATERIAL PLATE, 1 THK A36 STEEL

FERMI NATIONAL ACCELERATOR LABORATORY
UNITED STATES DEPARTMENT OF ENERGY

PPD/MECHANICAL SUPPORT
MINOS STRONGBACK FIXTURE
OUTSIDE PIVOT PLATE

SCALE	DRAWING NUMBER	SHEET NO	REV
HALF	9213.300-MC-384120	1 OF 1	

Plotted by [illegible] on 18 Jan-00 , File 384120-01-copy_of pff

REV	DESCRIPTION	DRAWN	DATE
		APPROVED	DATE

shim plates

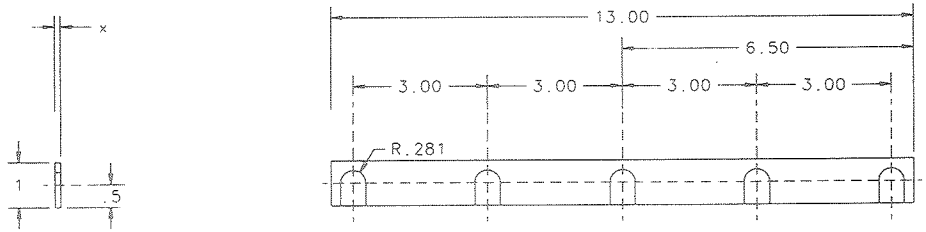

1/16" 10 REQUIRED
1/8" 10 REQUIRED
1/4" 6 REQUIRED

MATERIAL: METAL SHEET

ITEM NO.	PART NO.	DESCRIPTION OR SIZE	QTY. REQ.

PARTS LIST

UNLESS OTHERWISE SPECIFIED			ORIGINATOR	I. FANG	AUG99
.XX	.XXX	ANGLES	DRAWN		17AUG99
± .03	± .015	± ——	CHECKED		
			APPROVED		

1. BREAK ALL SHARP EDGES .015 MAX.
2. DO NOT SCALE DRWG.
3. DIMENSIONING IN ACCORD WITH ANSI Y14.5M-1982 STD'S.
4. ALL DIMENSIONS ARE IN INCHES.

125 MAX. ALL MACHINED SURFACES

USED ON

MATERIAL

FERMI NATIONAL ACCELERATOR LABORATORY
UNITED STATES DEPARTMENT OF ENERGY

PPD/MECHANICAL SUPPORT

SCALE	DRAWING NUMBER	SHEET NO.	REV
HALF		1 OF 1	

Plotted by ing on 18-Jan-00 . File loadtestshim.pff

- CHECK THE BOLT SHEAR STRESS.

$$f_v = \frac{F/n}{A} \quad \text{where } F = \frac{8000}{2} = 4000 \text{ lb}.$$

$$n = 5$$

$$A = \frac{1}{4}\pi d^2 = \frac{1}{4} \times \pi \times (3/8)^2 = 0.11 \text{ in}^2$$

$$f_v = \frac{4000/5}{0.11} = 7.243 \text{ ksi}$$

- ALLOWABLE SHEAR STRESS.

$$F_v = 0.17 F_u = 0.17 \times 70 = 11.9 \text{ ksi} - \text{governs}.$$

$$F_v = \frac{1}{3} F_y = \frac{1}{3} \times 50 = 16.67 \text{ ksi}$$

- SAFETY FACTOR ON SHEAR STRESS

$$SF = \frac{F_v}{f_v} = \frac{11.9}{7.243} = 1.64$$

- CHECK BOLT TENSILE STRESS

$$f_t = \frac{F/n}{A} \quad \text{where } F = 3650 \text{ lb}$$

$$n = 5$$

$$A = 0.11 \text{ in}^2$$

$$f_t = \frac{3650/5}{0.11} = 6.636 \text{ ksi}$$

0 FIND THE ALLOWABLE TENSILE STRESS:

$$F_t = 26 - 1.8 f_v \leq 20$$
$$= 26 - 1.8 \times 7.243$$
$$= 12.96 \text{ ksi} < 20$$

0 FIND THE SAFETY FACTOR ON TENSILE STRESS

$$SF = \frac{12.96}{6.636} = 1.96$$

0 FIND THE BOLT BEARING STRESS ON THE CONNECTION MATERIAL (ksi)

— For new plate: $t = 1''$

$$f_p = \frac{P/n}{dt} \quad \text{where } P = 4000 \text{ lb}$$
$$n = 5$$
$$d = 3/8''$$
$$t = 1''$$

$$f_p = \frac{4000/5}{3/8 \times 1} = 2.133 \text{ ksi}$$

— For existing plate:

$$t = 2''$$

$$f_p = \frac{P/n}{dt} \quad \text{where } P = 4000 \text{ lb}$$
$$n = 5$$
$$d = 3/8''$$
$$t = 2''$$

$$f_p = \frac{P/n}{dt} = \frac{4000/5}{3/8 \times 2} = 1.066 \text{ ksi}$$

- FIND THE ALLOWABLE BEARING STRESS

$$F_p = 1.2 F_u = 1.2 \times 58 = 69.6 \text{ ksi}$$

$$F_p = \frac{1}{3} F_y = \frac{1}{3} \times 36 = 12 \text{ ksi} \quad \text{(governs)}$$

- FIND THE SAFETY FACTOR ON THE BEARING STRESS.

$$SF = \frac{12}{2.133} = 5.6$$

In conclusion, design as sketched is accurated.

— PRELOAD THE STUD (TORQUE)

Tension on the Bolt $= \frac{1}{5} \times 3650 = 730$ lbs

According to "Design of machine Elements" chapter 5, page 276, knowing:

Torque required to produce desired clamping force is

$T = 0.195\, dw$

where $d = 0.375$ in

$w = 730$ lbs

$T = 0.195\, dw$

$= 0.195 \times 0.375 \times 730$

$= 53.38$ lb-in

$= 4.44$ lb-ft

$\boxed{\text{USE 25 lb-ft}}$

REV	DESCRIPTION	DRAWN / APPROVED	DATE / DATE
A	REVISED CLAMPING DEVICE ASSEMBLY IN VIEW A-A TO SHOW STANDARD BOLT W/SLEEVE INSTEAD OF SHOULDER BOLT.	B. CYKO	09-26-99

Top Safety Clamp Device

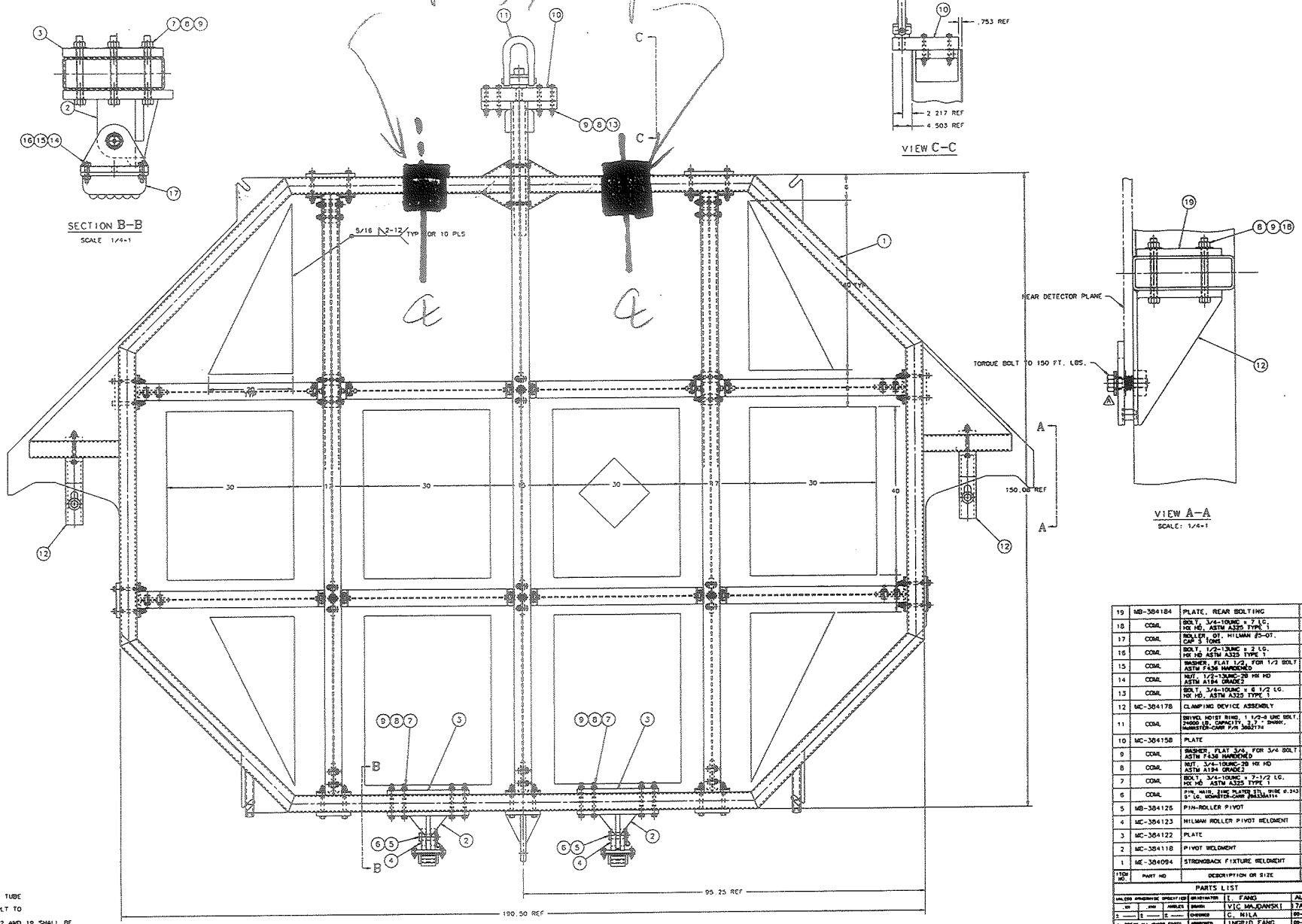

PLEASE NOTE THE RECTANGLE AND TRIANGLE PLATES MUST FACE DOWN AND REST BETWEEN THE MEMBERS OF THE STRONGBACK

NOTES:

1- TORQUE THROUGH BOLTS IN TUBE CONNECTIONS 110 LB-FT.
2- TIGHTEMEN HOIST RING BOLT TO A TORQUE OF 800 LB-FT.
3- ITEMS 2, 3, 4, 5, 10, 12 AND 19 SHALL BE PAINTED AS FOLLOWS:
EXCEPT FOR LABEL AND SURFACES WITHIN 2 INCHES OF ANY WELD, OPERATING PARTS, FINISHED SURFACES AND ALL OTHER NOT CONCEALED STEEL PARTS SHALL BE:
THOROUGHLY CLEANED OF ALL SCALE, RUST AND DIRT PER SPECIFICATIONS OF THE STEEL STRUCTURE PAINTING COUNCIL (SSPC) "SURFACE PREPARATION SPECIFICATION NO. 3,(SP-3) POWER TOOL CLEANING".
PRIMED WITH SYNTHETIC, QUICK-DRYING, RUST-INHIBITING FERROUS METAL PRIMER GLIDDEN 5205 GLID-GUARD TANK AND STRUCTURAL PRIMER;
PAINTED WITH TWO COATS OF INTERIOR, SEMI-GLOSS, ODORLESS, ALKYD ENAMEL GLIDDEN 4200 SPREAD ULTRA SEMI-GLOSS ENAMEL, COLOR SHALL BE "MASSEY FERGUSON RED" ***INCLUDE 1 GALLON OF FINAL PAINT WITH SHIPMENT TOUCH-UP)

ITEM NO.	PART NO	DESCRIPTION OR SIZE	QTY. REQ.
19	MD-384184	PLATE, REAR BOLTING	2
18	COML	BOLT, 3/4-10UNC x 7 LG. HX HD, ASTM A325 TYPE 1	4
17	COML	ROLLER, OT, HILMAN 25-OT. CAP 3 TONS	2
16	COML	BOLT, 1/2-13UNC x 2 LG. HX HD ASTM A325 TYPE 1	12
15	COML	WASHER, FLAT 1/2, FOR 1/2 BOLT ASTM F436 HARDENED	12
14	COML	NUT, 1/2-13UNC-2B HX HD ASTM A194 GRADE2	12
13	COML	BOLT, 3/4-10UNC x 6 1/2 LG. HX HD, ASTM A325 TYPE 1	8
12	MC-384178	CLAMPING DEVICE ASSEMBLY	2
11	COML	SWIVEL HOIST RING, 1 1/2-8 UNC BOLT, 24000 LB. CAPACITY 3:1, SHANK, WAMSTER-CAMP P/N 3402174	1
10	MC-384158	PLATE	1
9	COML	WASHER, FLAT 3/4, FOR 3/4 BOLT ASTM F436 HARDENED	36
8	COML	NUT, 3/4-10UNC-2B HX HD ASTM A194 GRADE2	36
7	COML	BOLT, 3/4-10UNC x 7-1/2 LG. HX HD ASTM A325 TYPE 1	24
6	COML	PIN, HAIR, ZINC PLATED STL, WIRE Ø.243 5" LG. WOMSTER-CAMP P/N 3402171	2
5	MD-384126	PIN-ROLLER PIVOT	2
4	MC-384123	HILMAN ROLLER PIVOT WELDMENT	2
3	MC-384122	PLATE	2
2	MC-384118	PIVOT WELDMENT	2
1	MC-384094	STRONGBACK FIXTURE WELDMENT	1

PARTS LIST

DRAWN BY	I. FANG	AUG99
DRAWN	VIC MAJDANSKI	7AUG99
CHECKED	C. NILA	09-09-99
APPROVED	INGRID FANG	09-09-99

1. BREAK ALL SHARP EDGES .015 MAX.
2. DO NOT SCALE DRAWING.
3. DIMENSIONS ARE IN INCHES UNLESS OTHERWISE SPECIFIED.
4. ALL DIMENSIONS ARE IN INCHES.

MATERIAL: SEE PARTS LIST

FERMI NATIONAL ACCELERATOR LABORATORY
UNITED STATES DEPARTMENT OF ENERGY

PPD/MECHANICAL SUPPORT
MINOS-NEAR DETECTOR
STRONGBACK FIXTURE ASSEMBLY

SCALE	DRAWING NUMBER		SHEET NO.	REV.
1/8	9213.3	384185	1 OF 1	A

APPROX. WT - 5400 LBS

DESIGN THE NEW TOP CLAMPING SUPPORTS AS A SAFETY DEVICE:

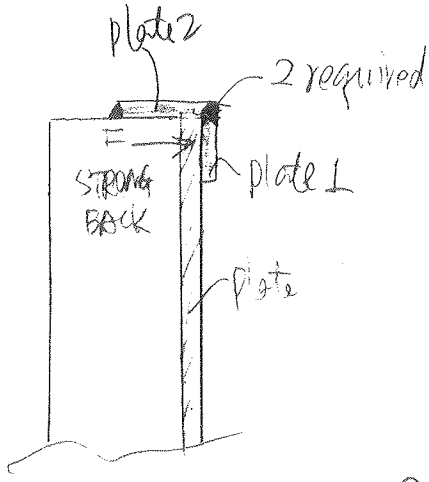

Plate 1:

$F = \frac{1}{2} \times 10026 = 5013\ lb$

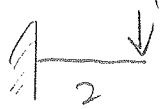

O Bending STRESS f_b

$M = F \times 2 = 5013 \times 2 = 10026\ lb\text{-}in$

$S = \frac{bh^2}{6} = \frac{3 \times 1.5^2}{6} = 1.125\ in^3$

$f_b = \frac{M}{S} = \frac{10026}{1.125} = 8.912\ ksi$

knowing $F_b = 12\ ksi$

$SF = \frac{F_b}{f_b} = \frac{12}{8.912} = 1.34$

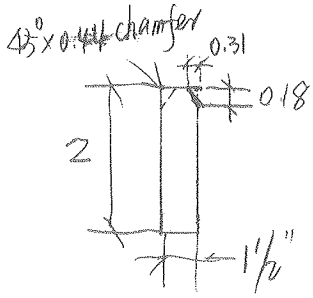

Plate A36

1.5" x 3" x 2" x 2 (ea)

O DESIGN WELDS:

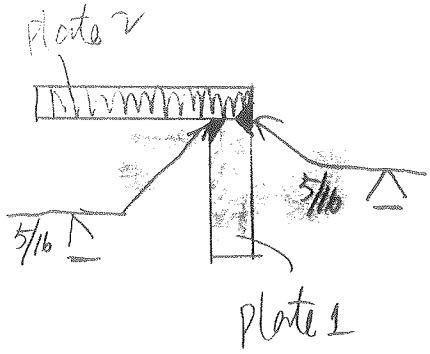

Bending:

$f = \frac{M}{S_w}$ where

$S_w = bd$
$= 3 \times 1.5$
$= 4.5\ in^2$

$f = \frac{10026}{4.5} = 2228\ lb$

Shear:

$f_v = \frac{F}{A_w} = \frac{5013}{6} = 835.5\ lb$

$$f = \sqrt{f^2 + f_1^2} = \sqrt{2228^2 - 825.5^2} = 2379.5 \text{ lb/in}$$
$$= 2.3795 \text{ kips/in}$$

Allowable:

$$0.707 \times 5/16 \times 12 = 2.65 \text{ kips/in}$$

$$SF = \frac{2.65}{1.38} = 1.9$$

— Plate 2

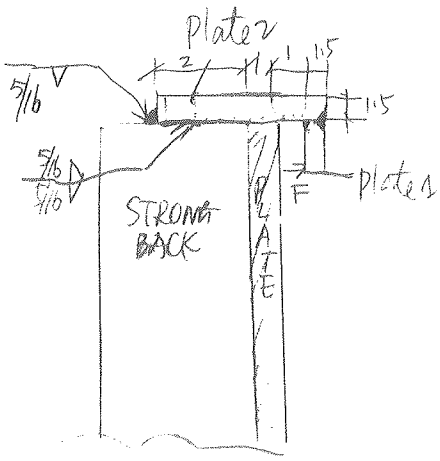

o Bending STRESS f_b

$$M = 5013 \times 2 = 10026 \text{ lb-in}$$

$$S = \frac{bh^2}{6} = \frac{3 \times 1.5^2}{6} = 1.125 \text{ in}^3$$

$$f_b = \frac{M}{S} = \frac{10026}{1.125} = 8.912 \text{ ksi}$$

$$F_b = 12 \text{ ksi}$$

$$SF = \frac{12}{8.912} = 1.34$$

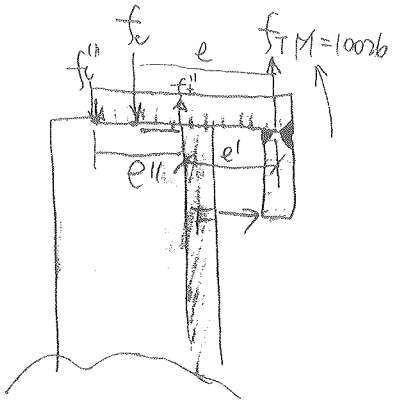

o WELDS.

$$M = f \times e$$

where $M = 10026$ lb-in

$$e = 1 + 1 + 1 + \frac{1.5}{2} = 3.75 \text{ in}$$

$$f = \frac{M}{e} = \frac{10026}{3.75} = 2673.6 \text{ lb}$$

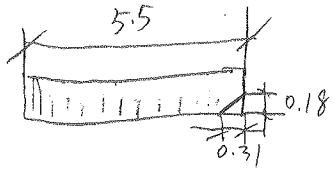

1.5" x 3" x 5.5" x 2 (ea)

$$M' = f \times e'$$

where $f = 2673.6$ lb

$$e' = \left(\frac{1.5}{2}\right) + 1 + 1 = 2.75 \text{ in}$$

$$M' = 2673.6 \times 2.75 = 7352.4 \text{ lb-in}$$

$$M' = f'' \times e''$$

where $M' = 7352.4$ lb-in

$e'' = 2$ in

$$f'' = \frac{M'}{e''} = \frac{7352.4}{2} = 3676.2 \text{ lb}$$

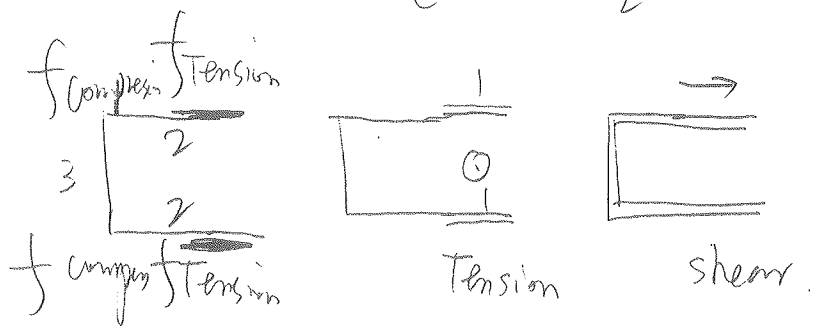

Tension: $f_t = \frac{F}{A} = \frac{3676.2}{2} = 1838.1$ lb/in

Shear: $f_v = \frac{F}{A} = \frac{5013}{2+3+2} = 716.14$ lb/in

$$f = \sqrt{f_t^2 + f_v^2} = \sqrt{1838.1^2 + 716.14^2}$$

$$= 1972.68 \text{ lb/in} = 1.972 \text{ kips/in}$$

Allowable:

$$5/16 \times 0.707 \times 12 = 2.65 \text{ kips/in}$$

$$SF = \frac{2.65}{1.972} = 1.34$$

In conclusion, the design as sketched is accurate.

REV.	DESCRIPTION	DRAWN	DATE
		APPROVED	DATE

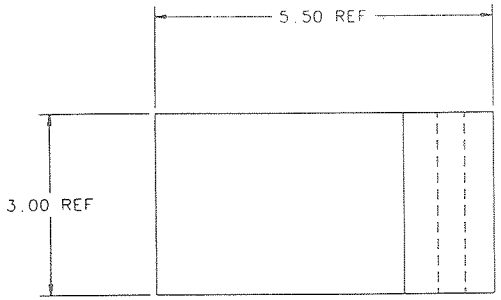

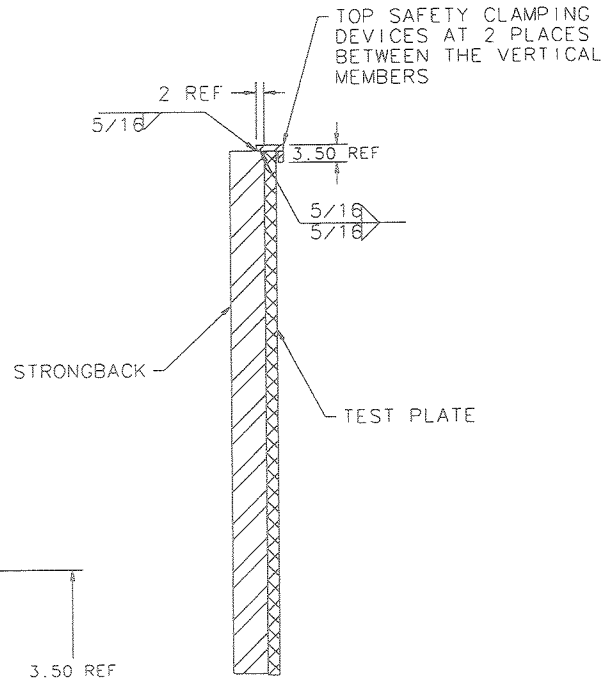

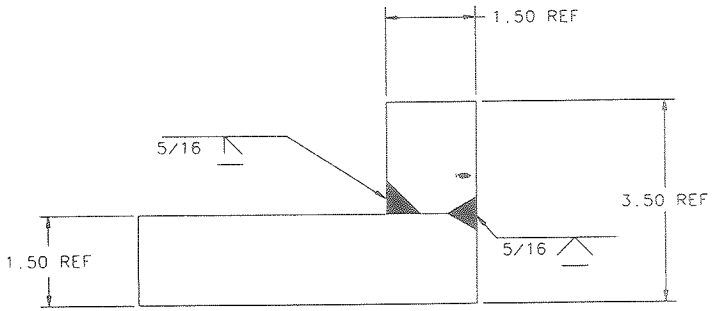

TWO REQUIRED

ITEM NO.	PART NO.	DESCRIPTION OR SIZE	QTY. REQ.

PARTS LIST

UNLESS OTHERWISE SPECIFIED			ORIGINATOR	I. FANG	JAN00
.XX	.XXX	ANGLES	DRAWN	I. FANG	JAN00
± .03	± ——	± ——	CHECKED		
			APPROVED		

1. BREAK ALL SHARP EDGES .015 MAX.
2. DO NOT SCALE DRWG.
3. DIMENSIONING IN ACCORD WITH ANSI Y14.5M-1982 STD'S.
4. ALL DIMENSIONS ARE IN INCHES.

125 MAX. ALL MACHINED SURFACES

USED ON

MATERIAL SEE PARTS LIST

FERMI NATIONAL ACCELERATOR LABORATORY
UNITED STATES DEPARTMENT OF ENERGY

PPD/MECHANICAL SUPPORT
MINOS STRONGBACK FIXTURE TOP SAFETY CLAMPING DEVICE ANGLE WELDMENT

SCALE	DRAWING NUMBER	SHEET NO	REV
HALF		1 OF 1	

Plotted by ing on 21-Jan-00 . File: 384156-01-copy_of.pff

REV.	DESCRIPTION	DRAWN	DATE
		APPROVED	DATE

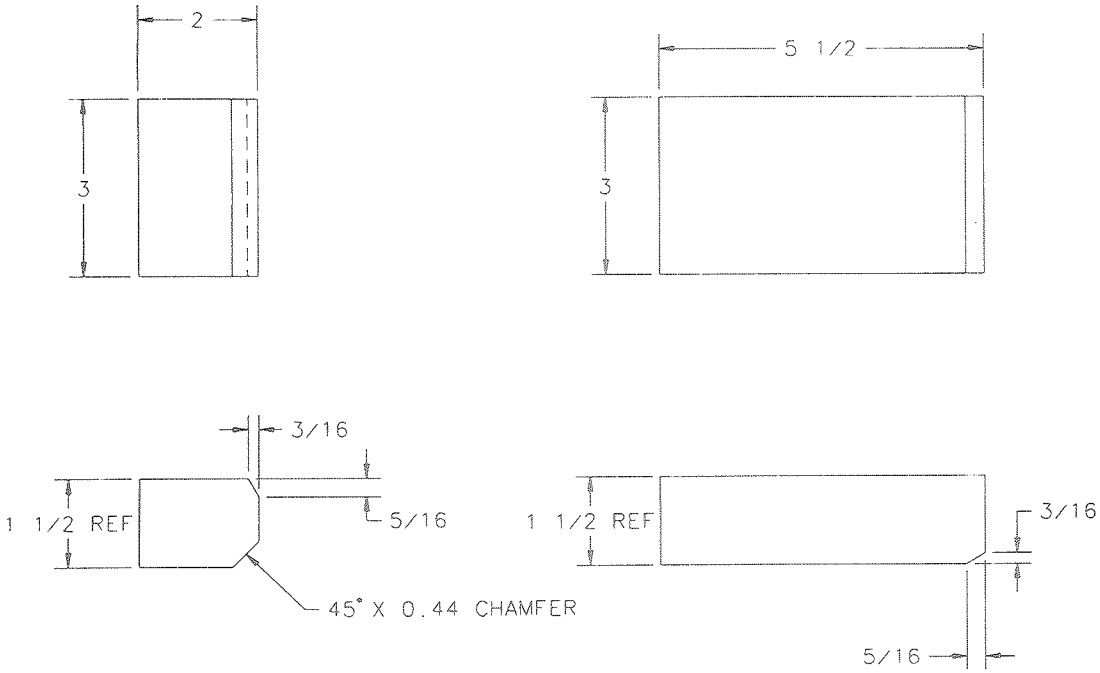

ITEM NO.	PART NO.	DESCRIPTION OR SIZE	QTY. REQ.

PARTS LIST

UNLESS OTHERWISE SPECIFIED					
.XX	.XXX	ANGLES	ORIGINATOR	I. FANG	JAN00
± .03	± ——	± ——	DRAWN	I. FANG	JAN 00
			CHECKED		
			APPROVED		

1. BREAK ALL SHARP EDGES .015 MAX.
2. DO NOT SCALE DRWG.
3. DIMENSIONING IN ACCORD WITH ANSI Y14.5M-1982 STD'S.
4. ALL DIMENSIONS ARE IN INCHES.

125 √ MAX. ALL MACHINED SURFACES

USED ON

MATERIAL PLATE, 1.5" THK A36 STEEL

FERMI NATIONAL ACCELERATOR LABORATORY
UNITED STATES DEPARTMENT OF ENERGY

PPD/MECHANICAL SUPPORT
MINOS STRONGBACK FIXTURE
TOP CLAMPING PLATES

SCALE	DRAWING NUMBER	SHEET NO.	REV.
HALF		1 OF 1	

Plotted by ingridf on 21-Jan-00 . File: 384155-01-copy_of.pff

REV	DESCRIPTION	DRAWN	DATE
		APPROVED	DATE
A	REVISED CLAMPING DEVICE ASSEMBLY IN VIEW A-A TO SHOW FIT WITH BOLT W/SLEEVE INSTEAD OF SHOULDER BOLT.	B. CYKO	09-26-99

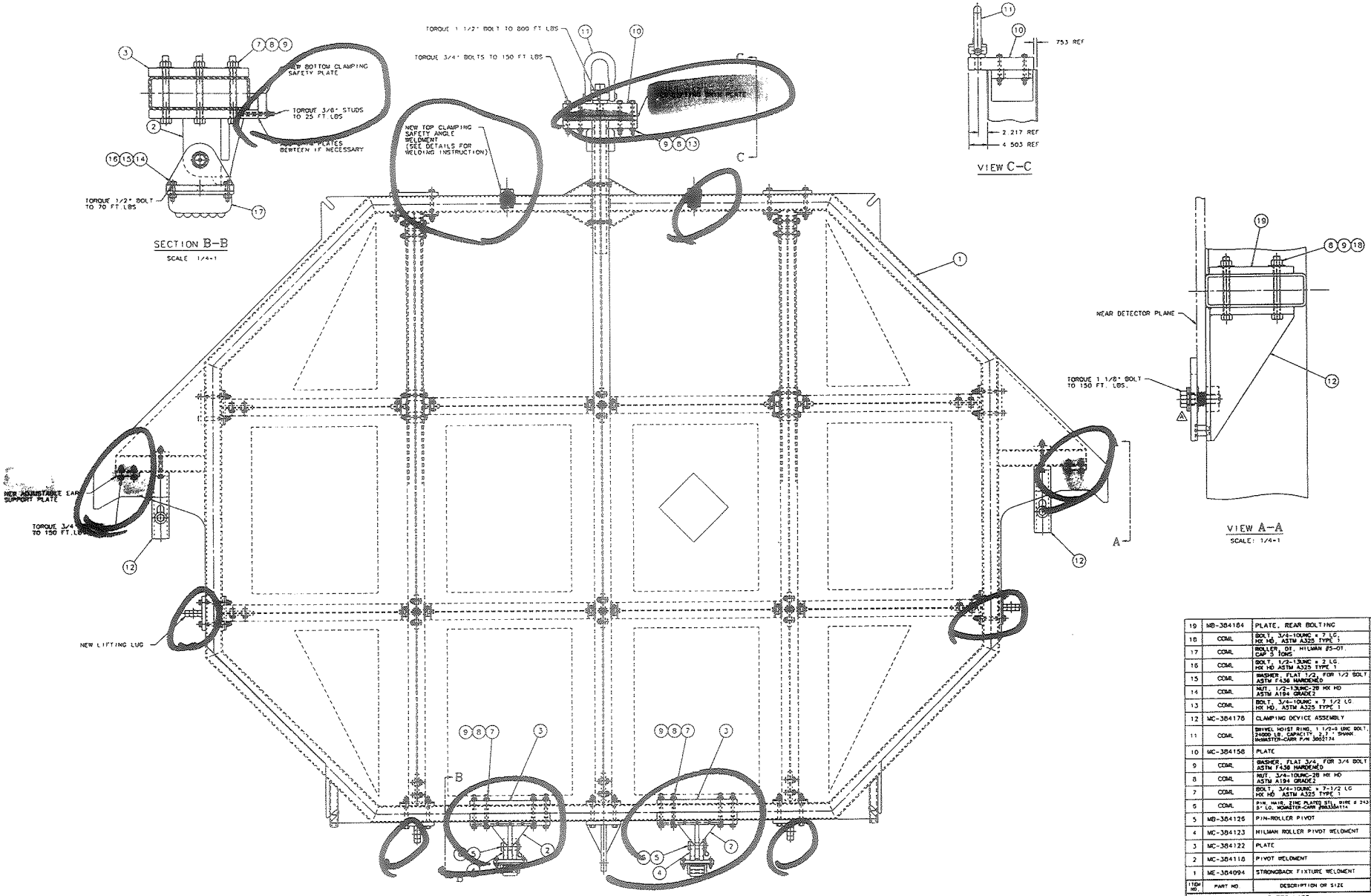

ITEM NO.	PART NO	DESCRIPTION OR SIZE	QTY REQ.
19	MD-384164	PLATE, REAR BOLTING	2
18	COML	BOLT, 3/4-10UNC x 7 LG; HX HD, ASTM A325 TYPE 1	4
17	COML	ROLLER, DT, HILLMAN 25-DT, CAP 3 TONS	2
16	COML	BOLT, 1/2-13UNC x 2 LG. HX HD ASTM A325 TYPE 1	12
15	COML	WASHER, FLAT 1/2, FOR 1/2 BOLT ASTM F436 HARDENED	12
14	COML	NUT, 1/2-13UNC-2B HX HD ASTM A194 GRADE2	12
13	COML	BOLT, 3/4-10UNC x 7 1/2 LG HX HD, ASTM A325 TYPE 1	8
12	MC-384176	CLAMPING DEVICE ASSEMBLY	2
11	COML	SWIVEL HOIST RING, 1 1/2-4 UNC BOLT, 24000 LB. CAPACITY 2.1" SHANK WORKSTER-CARR P/N 3002174	1
10	MC-384158	PLATE	1
9	COML	WASHER, FLAT 3/4, FOR 3/4 BOLT ASTM F436 HARDENED	36
8	COML	NUT, 3/4-10UNC-2B HX HD ASTM A194 GRADE2	36
7	COML	BOLT, 3/4-10UNC x 7-1/2 LG HX HD ASTM A325 TYPE 1	24
6	COML	PIN, HAIR, ZINC PLATED STL, WIRE # 243 5" LG, WORKSTER-CARR P/N 3004114	2
5	MD-384126	PIN-ROLLER PIVOT	2
4	MC-384123	HILMAN ROLLER PIVOT WELDMENT	2
3	MC-384122	PLATE	2
2	MC-384118	PIVOT WELDMENT	2
1	ME-384094	STRONGBACK FIXTURE WELDMENT	1

PARTS LIST

UNLESS OTHERWISE SPECIFIED	DESIGNATOR	I. FANG	27JAN98
DIM. / TOL. / ANGLES	DRAWN	I. FANG	27JAN98
± ___ ± ___ ± ___	CHECKED		
1. BREAK ALL SHARP EDGES .015 MAX. 2. DO NOT SCALE DRAWING 3. DIMENSIONS ARE PRIOR TO PAINTING 4. ALL DIMENSIONS ARE IN INCHES	APPROVED		
	USED ON		
MAX. 125 MACHINED SURFACE	MATERIAL	SEE PARTS LIST	

FERMI NATIONAL ACCELERATOR LABORATORY
UNITED STATES DEPARTMENT OF ENERGY

PPD/MECHANICAL SUPPORT
MINOS-NEAR DETECTOR
STRONGBACK FIXTURE LOAD TEST

SCALE	DRAWING NUMBER	SHEET NO	REV
1/8		1 OF 1	A

APPROX WT - 15400 LBS

NOTES:

1- TORQUE THROUGH BOLTS IN TUBE CONNECTIONS 110 LB-FT

2- TORQUE BOLTS IN ANGLE TO WIDE FLANGE BEAM CONNECTIONS TO 200 LB-FT

3- TORQUE THROUGH BOLTS IN STIFFNER PLATE CONNECTIONS TO 200 LB-FT

Plotted by [illegible] 26-Jun-00 , File [illegible]