REV	DESCRIPTION	DRAWN / APPROVED	DATE / DATE
A	REVISED CLAMPING DEVICE ASSEMBLY IN VIEW A-A TO SHOW STANDARD BOLT w/SLEEVE INSTEAD OF SHOULDER BOLT	B. CYKO	09-30-99

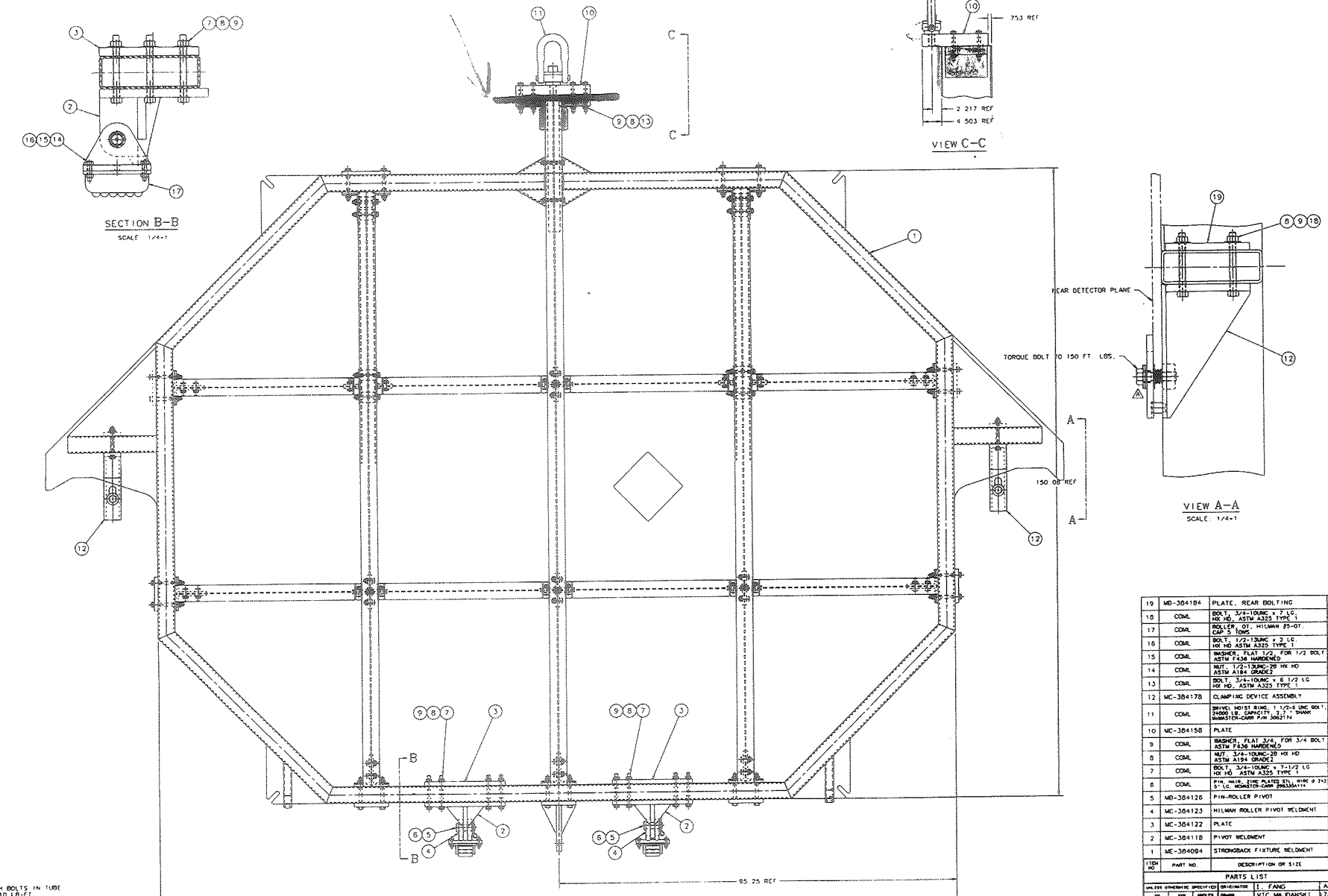

ITEM NO	PART NO.	DESCRIPTION OR SIZE	QTY. REQ.
19	MB-384184	PLATE, REAR BOLTING	2
18	COML	BOLT, 3/4-10UNC x 7 LG, HX HD, ASTM A325 TYPE 1	4
17	COML	ROLLER, OT, HILMAN #5-OT, CAP 5 TONS	2
16	COML	BOLT, 1/2-13UNC x 2 LG, HX HD ASTM A325 TYPE 1	12
15	COML	WASHER, FLAT 1/2, FOR 1/2 BOLT ASTM F436 HARDENED	12
14	COML	NUT, 1/2-13UNC-2B HX HD ASTM A194 GRADE2	12
13	COML	BOLT, 3/4-10UNC x 6 1/2 LG HX HD, ASTM A325 TYPE 1	8
12	MC-384178	CLAMPING DEVICE ASSEMBLY	2
11	COML	SWIVEL HOIST RING, 1 1/2-6 UNC BOLT, 24000 LB. CAPACITY, 2.2 " SHANK McMASTER-CARR P/N 3062174	1
10	MC-384158	PLATE	1
9	COML	WASHER, FLAT 3/4, FOR 3/4 BOLT ASTM F436 HARDENED	36
8	COML	NUT, 3/4-10UNC-2B HX HD ASTM A194 GRADE2	36
7	COML	BOLT, 3/4-10UNC x 7-1/2 LG HX HD ASTM A325 TYPE 1	24
6	COML	PIN, HAIR, ZINC PLATED STL, WIRE Ø 243 5" LG, MCMASTER-CARR #98335A114	2
5	MB-384126	PIN-ROLLER PIVOT	2
4	MC-384123	HILMAN ROLLER PIVOT WELDMENT	2
3	MC-384122	PLATE	2
2	MC-384118	PIVOT WELDMENT	2
1	ME-384094	STRONGBACK FIXTURE WELDMENT	1

PARTS LIST

UNLESS OTHERWISE SPECIFIED	ORIGINATOR	I. FANG	AUG99
.XX .XXX ANGLES	DRAWN	VIC MAJDANSKI	17AUG99
± .XX ± .XXX ± .XXX	CHECKED	C. NILA	09-09-99
	APPROVED	INGRID FANG	09-09-99

* BREAK ALL SHARP EDGES
* DO NOT SCALE DRAWING
* DIMENSIONING IS ACCORD WITH ANSI Y14.5M-1982
* ALL DIMENSIONS ARE IN INCHES

✓ MAX ALL MACHINED SURFACES

USED ON

MATERIAL SEE PARTS LIST

FERMI NATIONAL ACCELERATOR LABORATORY
UNITED STATES DEPARTMENT OF ENERGY

PPD/MECHANICAL SUPPORT
MINOS-NEAR DETECTOR
STRONGBACK FIXTURE ASSEMBLY

SCALE	DRAWING NUMBER	SHEET NO	REV
1/8	9213.3[illegible]-384185	1 OF 1	A

APPROX WT - 5400 LBS

NOTES:

1- TORQUE THROUGH BOLTS IN TUBE CONNECTIONS 110 LB-FT.
2- TIGHTENEN HOIST RING BOLT TO A TORQUE OF 800 LB-FT
3- ITEMS 2, 3, 4, 5, 10, 12 AND 19 SHALL BE PAINTED AS FOLLOWS
EXCEPT FOR LABEL AND SURFACES WITHIN 2 INCHES OF ANY WELD. OPERATING PARTS, FINISHED SURFACES AND ALL OTHER NOT CONCEALED STEEL PARTS SHALL BE
THOROUGHLY CLEANED OF ALL SCALE, RUST AND DIRT PER SPECIFICATIONS OF THE STEEL STRUCTURE PAINTING COUNCIL (SSPC) "SURFACE PREPARATION SPECIFICATION NO. 3 (SP-3) POWER TOOL CLEANING", PRIMED WITH SYNTHETIC, QUICK-DRYING, RUST-INHIBITING FERROUS METAL PRIMER GLIDDEN 5205 GLID-GUARD TANK AND STRUCTURAL PRIMER, PAINTED WITH TWO COATS OF INTERIOR, SEMI-GLOSS, ODORLESS, ALKYD ENAMEL GLIDDEN 4200 SPREAD ULTRA SEMI-GLOSS ENAMEL. COLOR SHALL BE "MASSEY FERGUSON RED". INCLUDE 1 GALLON OF FINAL PAINT WITH SHIPMENT [illegible] TOUCH-UP)

Plotted by jrg 20 Jun 00 . File strongplate.pff

~~DESIGN NEW LIFTING SHIM PLATE~~.

AFTER FURTHER INSPECTION, FOUND THE LIFTING DEVICE ANGLE WELDMENTS SLOTTED HOLE SIZES WERE WRONG. THE SLOT HOLE SIZE IS DESIGNED TO BE SHORT SLOT 13/16" W x 1" L. IN ORDER TO MEET AISC, ASD EGDE DISTANCE REQUIREMENT. THE SLOT SIZE ON THE LIFTING DEVICE ANGLE WELDMENT IS 13/16" W x 1 7/8" L. AND FAILS THE MINIMUM END DISTANCE FROM CENTER OF BOLT HOLE IN ACCORDANCE WITH AISC CODE.

PROPOSE TO DESIGN THE NEW LIFTING SHIM PLATE BETWEEN ITEMS (10) & (28) ON DWG 9213-300-ME-384185. THE NEW PLATE WILL BLOCK THE OVERSIZED SLOTS.

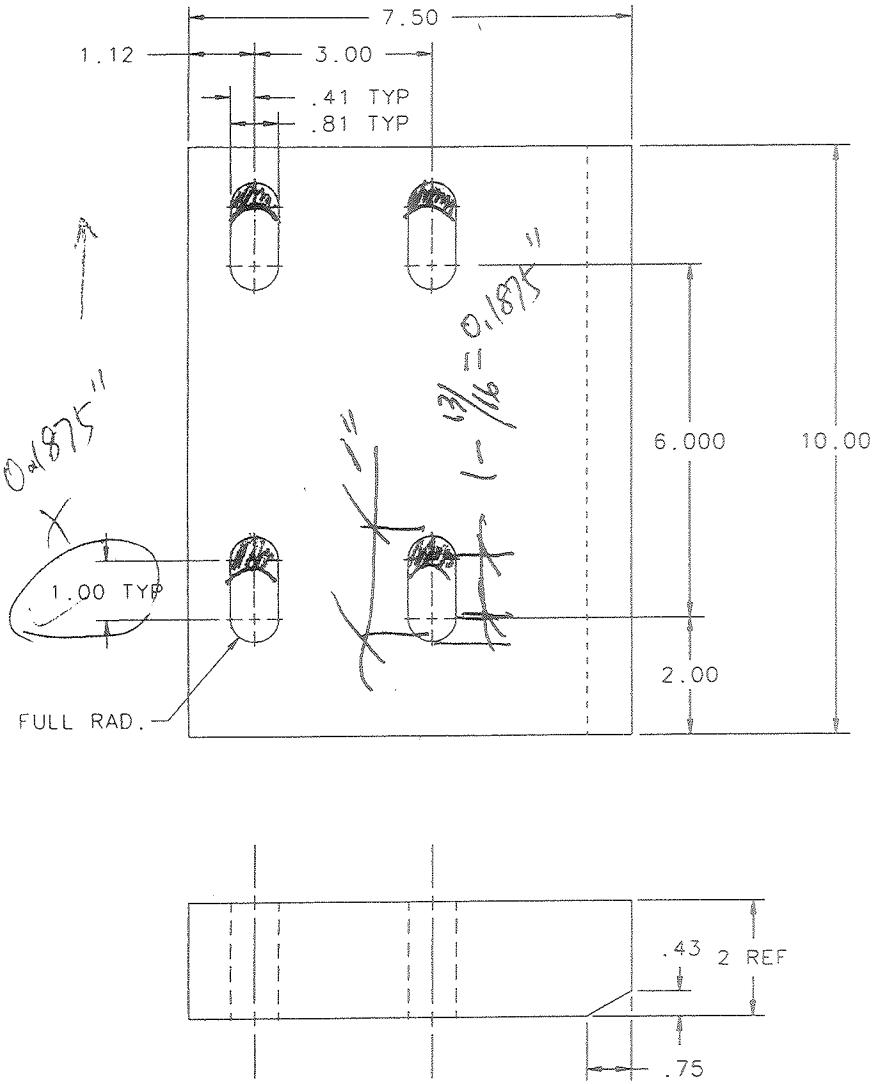

REV.	DESCRIPTION	DRAWN	DATE
		APPROVED	DATE

ITEM NO.	PART NO.	DESCRIPTION OR SIZE	QTY. REQ.

PARTS LIST

UNLESS OTHERWISE SPECIFIED			ORIGINATOR	I. FANG	SEP 99
.XX	.XXX	ANGLES	DRAWN	B. CYKO	09-09-99
± .03	± .015	± ——	CHECKED		
			APPROVED		

1. BREAK ALL SHARP EDGES .015 MAX.
2. DO NOT SCALE DRWG.
3. DIMENSIONING IN ACCORD WITH ANSI Y14.5M-1982 STD'S.
4. ALL DIMENSIONS ARE IN INCHES.

125 MAX. ALL MACHINED SURFACES

USED ON MC-384197

MATERIAL BAR, 2 THK A36 STEEL

FERMI NATIONAL ACCELERATOR LABORATORY
UNITED STATES DEPARTMENT OF ENERGY

PPD/MECHANICAL SUPPORT MINOS STRONGBACK FIXTURE BAR, L.H.

SCALE	DRAWING NUMBER	SHEET NO.	REV.
HALF	9213.300-MB-384198	1 OF 1	

REV.	DESCRIPTION	DRAWN	DATE
		APPROVED	DATE

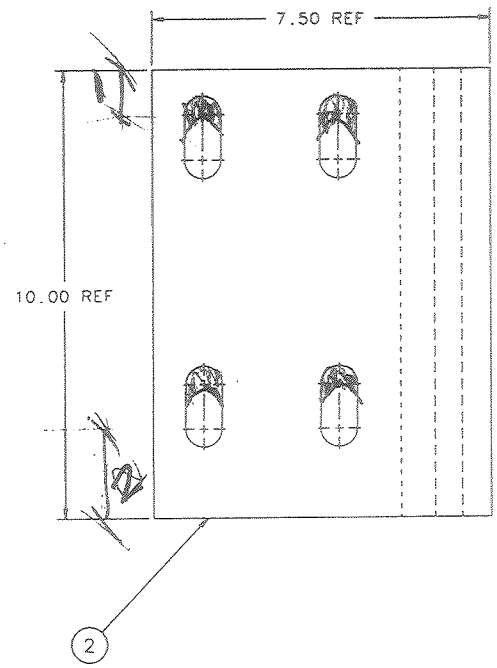

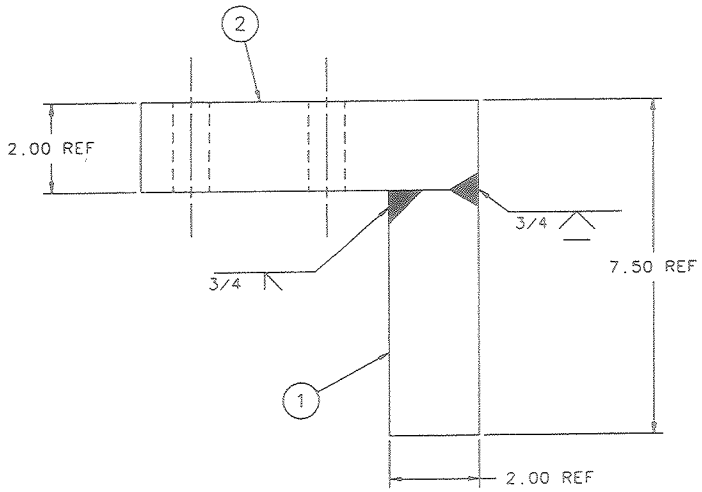

ITEM NO.	PART NO.	DESCRIPTION OR SIZE	QTY. REQ.
2	MB-384198	BAR, L.H.	1
1	MB-384155	BAR	1

PARTS LIST

UNLESS OTHERWISE SPECIFIED			ORIGINATOR	I. FANG	SEP 99
.XX	.XXX	ANGLES	DRAWN	B. CYKO	09-09-99
± .03	± —	± —	CHECKED		
			APPROVED		

1. BREAK ALL SHARP EDGES .015 MAX.
2. DO NOT SCALE DRWG.
3. DIMENSIONING IN ACCORD WITH ANSI Y14.5M-1982 STD'S.
4. ALL DIMENSIONS ARE IN INCHES.

125 MAX. ALL MACHINED SURFACES

USED ON ME-384094

MATERIAL SEE PARTS LIST

FERMI NATIONAL ACCELERATOR LABORATORY
UNITED STATES DEPARTMENT OF ENERGY

PPD/MECHANICAL SUPPORT
MINOS STRONGBACK FIXTURE
LIFTING DEVICE ANGLE WELDMENT, L.H.

SCALE	DRAWING NUMBER	SHEET NO.	REV.
HALF	9213.300-MC-384197	OF 1	

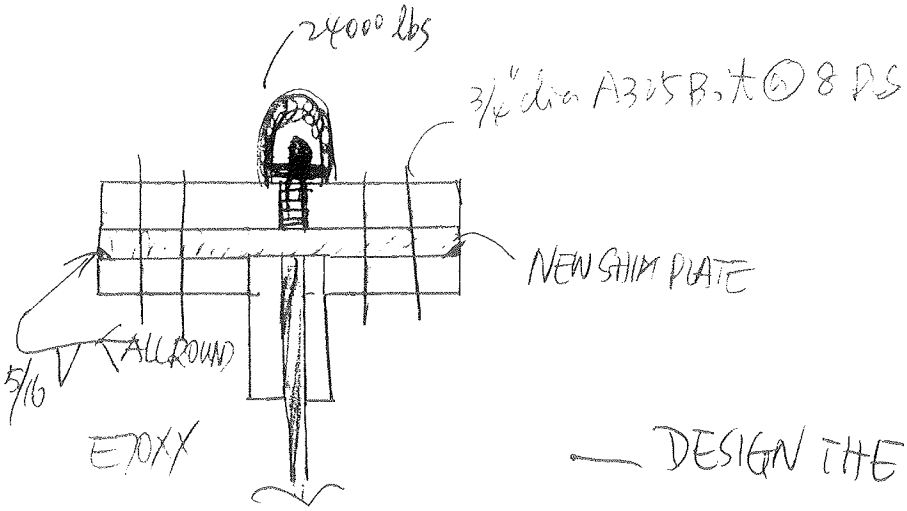

— DESIGN THE WELDS

1) AT VERTICAL POSITION.

knowing F=24000 lb.

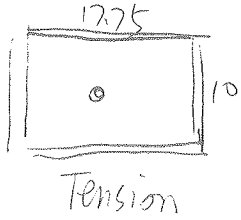

$$f_t = \frac{F}{A_W} = \frac{24000}{(17.75+10)2} = 432.43 \text{ lb/in}$$

$$= 0.432 \text{ kip/in}.$$

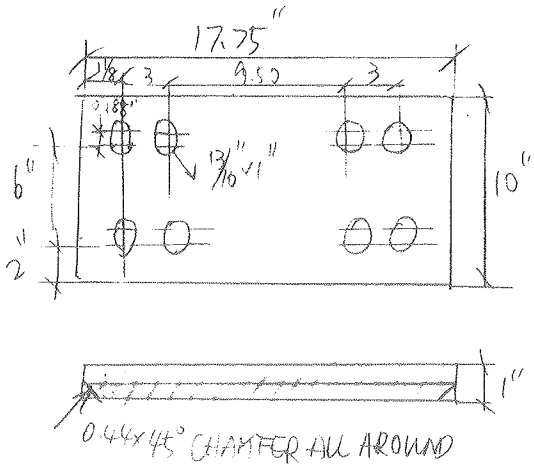

2) AT HORIZONTAL POSITION:

knowing F=24000 lb

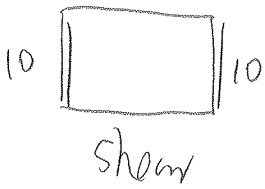

$$f_v = \frac{F}{A_W} = \frac{2400}{10+10} = 1200 \text{ lb/in}$$

$$= 1.20 \text{ kips/in}$$

- FIND THE ALLOWABLE WELD STRESS.

$$0.707 \times 5/16 \times 12 = 2.65 \text{ kips/in}.$$

- FIND THE SAFETY FACTOR ON STRESS.

$$SF = \frac{2.65}{1.20} = 2.2$$

- FIND THE BEARING STRESS f_p.

$$f_p = \frac{F}{A} \quad \text{where } F = 24000 \times 1/8 = 3000 \text{ lb}$$

$$A = d \times t = 0.75 \times 1 = 0.75 \text{ in}^2$$

$$f_p = \frac{3000}{0.75} = 4000 \text{ psi} = 4 \text{ ksi}$$

- FIND THE ALLOWABLE BEARING STRESS F_p

$$F_p = 1.2 F_u. \quad \text{where } F_u = 58 \text{ ksi for A36}$$

$$= 1.2 \times 58$$

$$= 69.6 \text{ ksi}$$

$$F_p = \frac{1}{3} F_y \quad \text{where } F_y = 36 \text{ ksi for A36}$$

$$= \frac{1}{3} \times 36$$

$$= 12 \text{ ksi}$$

- FIND THE SAFETY FACTOR ON BEARING STRESS

$$SF = \frac{12}{4} = 3$$

- FIND THE BOLT LENGTH.

$$6\tfrac{1}{2} + 1 = 7\tfrac{1}{2}'' \text{ LONG}$$

- FIND THE TORQUE

AS SAME AS BEFORE = 150 lb-ft.

In conclusion, the design as sketched is accurate.

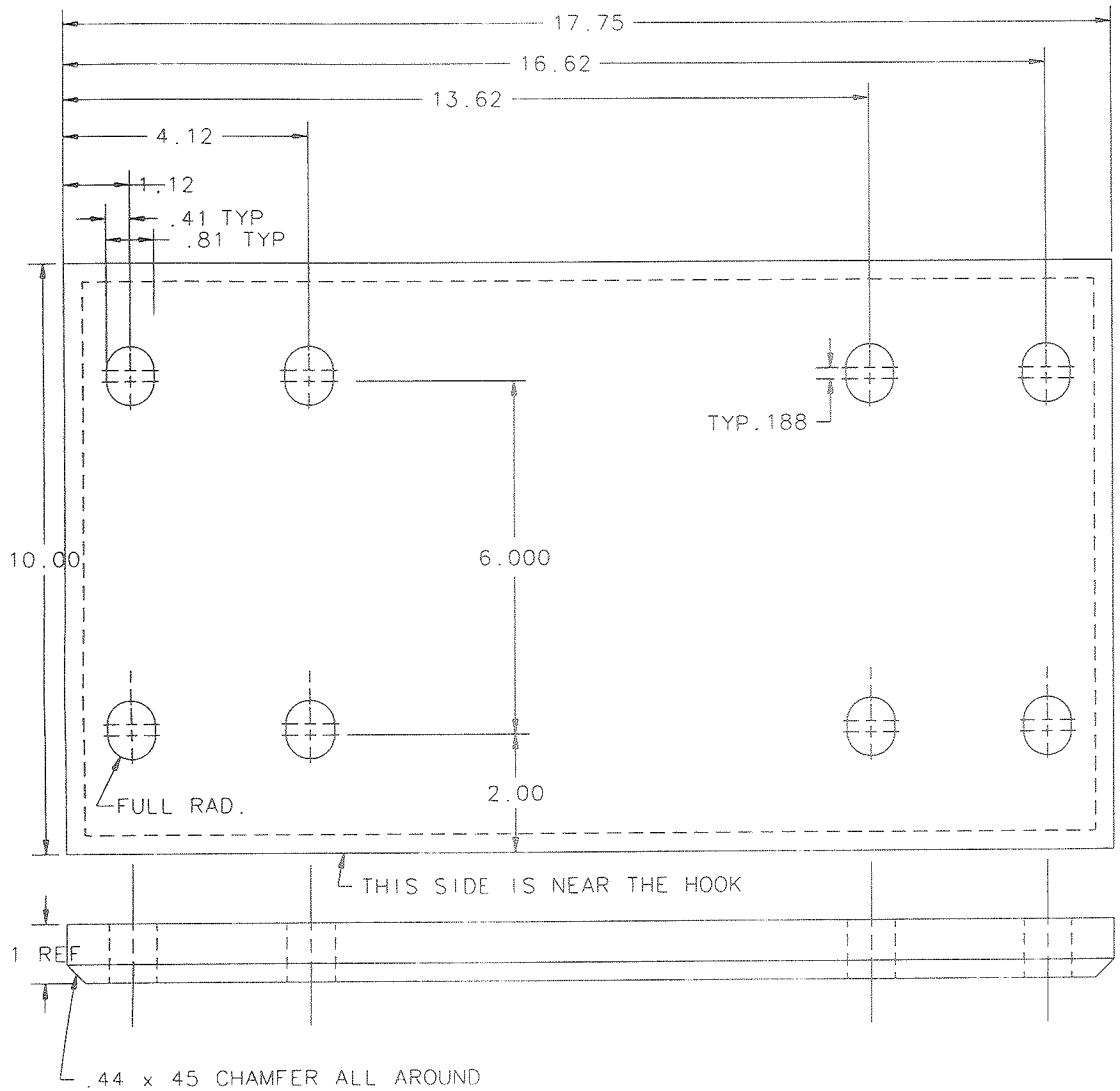

REV.	DESCRIPTION	DRAWN	DATE
		APPROVED	DATE

NOTES:

1. USE 5/16 FILLET WELD ALL ROUND TO ITEMS 32 & 28 AS SHOWN ON DRAWING 9213.300-ME-384094.
2. USE E70XX ROD ONLY.

ITEM NO.	PART NO.	DESCRIPTION OR SIZE	QTY. REQ.

PARTS LIST

UNLESS OTHERWISE SPECIFIED			ORIGINATOR	I. FANG	JAN 00
.XX	.XXX	ANGLES	DRAWN		
± .03	± .015	± ——	CHECKED		
			APPROVED		

1. BREAK ALL SHARP EDGES .015 MAX.
2. DO NOT SCALE DRWG.
3. DIMENSIONING IN ACCORD WITH ANSI Y14.5M-1982 STD'S.
4. ALL DIMENSIONS ARE IN INCHES.

125 MAX. ALL MACHINED SURFACES

USED ON

MATERIAL

PLATE, 1 THK A36 OR 1018 CRS

FERMI NATIONAL ACCELERATOR LABORATORY
UNITED STATES DEPARTMENT OF ENERGY

PPD/MECHANICAL SUPPORT MINOS STRONGBACK FIXTURE LIFTING SHIM PLATE

SCALE	DRAWING NUMBER	SHEET NO.	REV.
HALF		1 OF 1	

Plotted by ingridf on 24-Jan-00 . File: 384198-01 copy..of pif