REV	DESCRIPTION	DRAWN / APPROVED	DATE / DATE
A	REVISED CLAMPING DEVICE ASSEMBLY IN VIEW A-A TO SHOW STANDARD BOLT W/SLEEVE INSTEAD OF SHOULDER BOLT.	D. CYKO	09-28-99

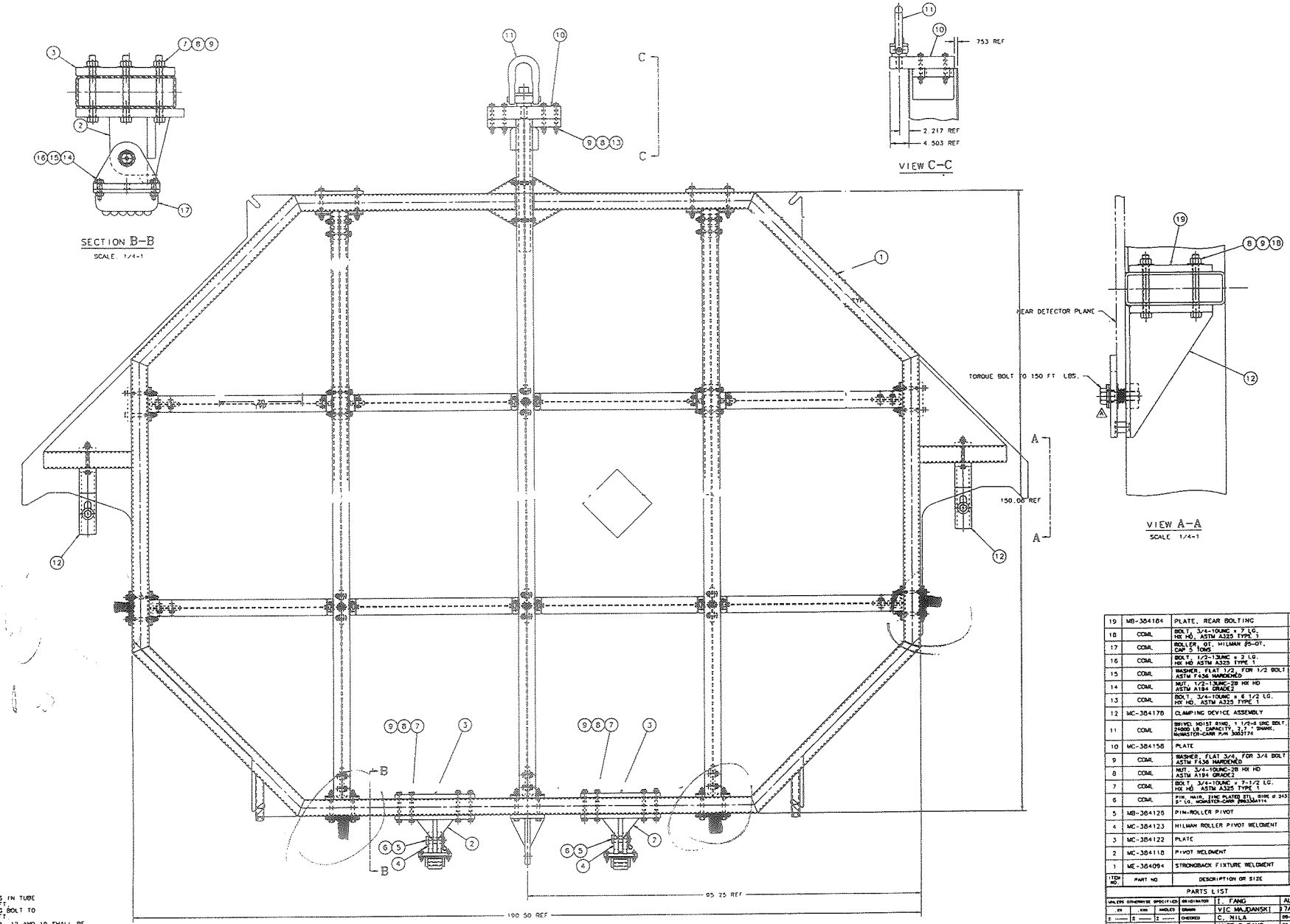

NOTES

1- TORQUE THROUGH BOLTS IN TUBE CONNECTIONS 110 LB-FT.
2- TIGHTEMEN HOIST RING BOLT TO A TORQUE OF 800 LB-FT.
3- ITEMS 2, 3, 4, 5, 10, 12 AND 19 SHALL BE PAINTED AS FOLLOWS:
EXCEPT FOR LABEL AND SURFACES WITHIN 2 INCHES OF ANY WELD, OPERATING PARTS, FINISHED SURFACES AND ALL OTHER NOT CONCEALED STEEL PARTS SHALL BE:
THOROUGHLY CLEANED OF ALL SCALE, RUST AND DIRT PER SPECIFICATIONS OF THE STEEL STRUCTURE PAINTING COUNCIL (SSPC) "SURFACE PREPARATION SPECIFICATION NO. 3 (SP-3) POWER TOOL CLEANING".
PRIMED WITH SYNTHETIC, QUICK-DRYING, RUST-INHIBITING FERROUS METAL PRIMER GLIDDEN 5203 GLID-GUARD TANK AND STRUCTURAL PRIMER.
PAINTED WITH TWO COATS OF INTERIOR SEMI-GLOSS, ODORLESS, ALKYD ENAMEL GLIDDEN 4200 SPREAD ULTRA SEMI-GLOSS ENAMEL. COLOR SHALL BE "HASSEY FERGUSON RED". INCLUDE 1 GALLON OF FINAL PAINT WITH SHIPMENT FOR TOUCH-UP.

PLEASE NOTE THE RECTANGLE AND TRIANGLE PLATES MUST FACE DOWN AND REST BETWEEN THE MEMBERS OF THE STRONGBACK.

APPROX. WT. - 5400 LBS

ITEM NO.	PART NO	DESCRIPTION OR SIZE	QTY. REQ.
19	MB-384184	PLATE, REAR BOLTING	2
18	COML	BOLT, 3/4-10UNC x 7 LG. HX HD, ASTM A325 TYPE 1	4
17	COML	ROLLER, DT. HILMAN R5-DT. CAP 5 TONS	2
16	COML	BOLT, 1/2-13UNC x 2 LG. HX HD ASTM A325 TYPE 1	12
15	COML	WASHER, FLAT 1/2, FOR 1/2 BOLT ASTM F436 HARDENED	12
14	COML	NUT 1/2-13UNC-2B HX HD ASTM A194 GRADE2	12
13	COML	BOLT 3/4-10UNC x 6 1/2 LG. HX HD, ASTM A325 TYPE 1	8
12	MC-384178	CLAMPING DEVICE ASSEMBLY	2
11	COML	SWIVEL HOIST RING, 1 1/2-6 UNC BOLT, 24000 LB. CAPACITY, 2.7" SHANK, McMASTER-CARR P/N 3083274	1
10	MC-384158	PLATE	1
9	COML	WASHER, FLAT 3/4, FOR 3/4 BOLT ASTM F436 HARDENED	36
8	COML	NUT, 3/4-10UNC-2B HX HD ASTM A194 GRADE2	36
7	COML	BOLT, 3/4-10UNC x 7-1/2 LG. HX HD ASTM A325 TYPE 1	24
6	COML	PIN, HAIR, SPIC PLATED STL, RING Ø.243 3" LG. McMASTER-CARR P/N 9484T14	2
5	MB-384126	PIN-ROLLER PIVOT	2
4	MC-384123	HILMAN ROLLER PIVOT WELDMENT	2
3	MC-384122	PLATE	2
2	MC-384118	PIVOT WELDMENT	2
1	MC-384094	STRONGBACK FIXTURE WELDMENT	1

PARTS LIST

UNLESS OTHERWISE SPECIFIED	ORIGINATOR	T. FANG AUG99
DR.	DRAWN	VIC MAJDANSKI 7AUG99
CHECKED	C. NILA	08-06-99
APPROVED	INGRID FANG	08-06-99
USED ON		
MATERIAL	SEE PARTS LIST	

FERMI NATIONAL ACCELERATOR LABORATORY
UNITED STATES DEPARTMENT OF ENERGY

PPD/MECHANICAL SUPPORT
MINOS-NEAR DETECTOR
STRONGBACK FIXTURE ASSEMBLY

SCALE	DRAWING NUMBER	SHEET NO	REV
1/8	9213.3.4185	1 OF 1	A

Plotted by ingr. on 13-Jun-00 . File /tmp/tmp.plot

DESIGN THE LIFTING LUGS TO HELP ALIGN THE PLATE ON STRONGBACK. (4 PLACES)

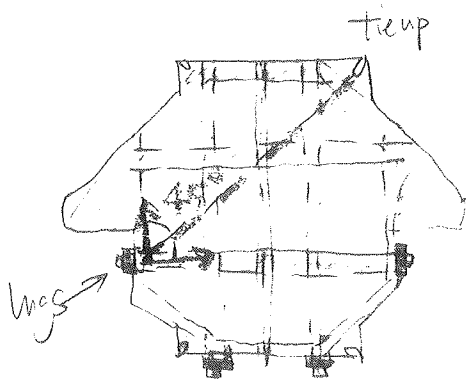

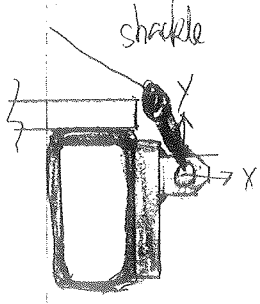

0 DESIGN LOAD F_x, F_y, F_z.

— DESIGN LOAD F_x

$F_x = 2\mu N$ where $\mu = 0.39$ (steel to steel dry)

$N = 8000$ lbs

$F_x = 2 \times 0.39 \times 800$

$= 6240$ lbs

— DESIGN LOAD F_y

$F_y = \frac{1}{2} \times$ STRONGBACK

$= \frac{1}{2} \times 5400 = 2700$ lbs

— DESIGN LOAD F_z

$F_z = \cos 45 \times F_x$

$= 0.707 \times 6240 = 4411.68$ lbs

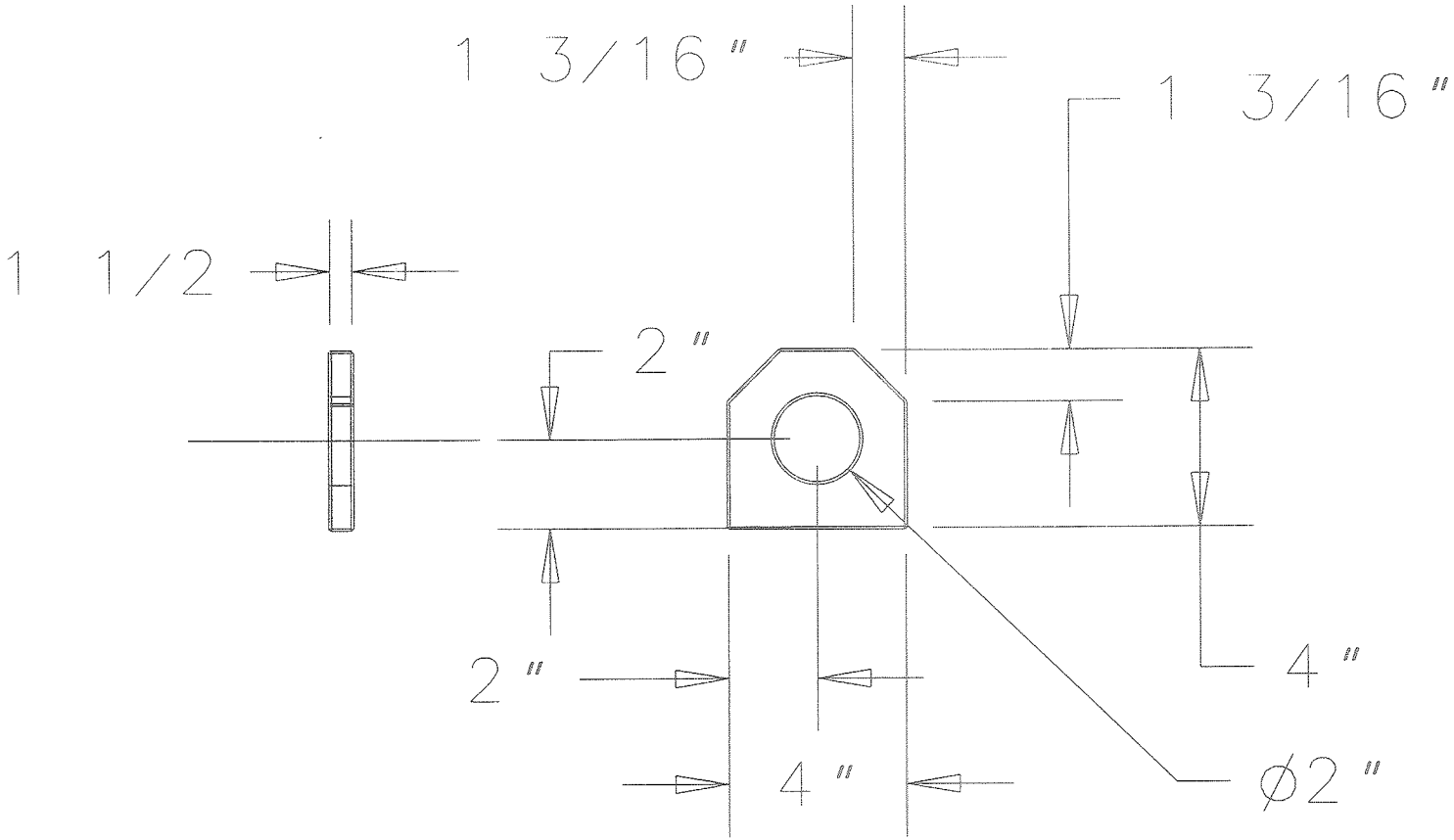

4REQUIRED

- FIND THE SHEAR STRESS f_v

$$f_v = \frac{F_v}{A} \quad \text{where } F_v = 2700 \text{ lbs}$$

$$A = (4-2) \times 1.5 = 2.5 \text{ in}^2$$

$$f_v = \frac{2700}{2.5} = 1.080 \text{ ksi}$$

- FIND THE HORIZONTAL SHEAR STRESS f_v'

$$f_v' = \frac{F_v'}{A} \quad \text{where } F_v' = 6240 \text{ lbs}$$

$$A = (4.1875) \times 1.5 = 1.78 \text{ in}^2$$

$$f_v' = \frac{6240}{1.78} = 3.503 \text{ ksi}$$

- FIND THE COMBINED SHEAR STRESS f_v''

$$f_v'' = \sqrt{f_v^2 + f_v'^2}$$

$$= \sqrt{(1.080^2 + 3.503^2)} = 3.67 \text{ ksi}$$

- FIND THE ALLOWABLE SHEAR STRESS F_v

$$F_v = \tfrac{1}{3} F_y = \tfrac{1}{3} \times 36 = 12 \text{ ksi}$$

- FIND THE SAFETY FACTOR ON SHEAR STRESS

$$SF = \frac{12}{3.67} = 3.3$$

- FIND BEND STRESS f_{bz}

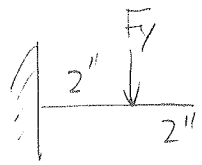

$$M_{bz} = F_y \times 2 = 2700 \times 2 = 5400 \text{ lb-in}$$

$$S_z = \frac{bh^2}{6} = \frac{1\tfrac{1}{2} \times 4^2}{6} = 4 \text{ in}^3$$

$$f_{bz} = \frac{M}{S} = \frac{5400}{4} = 1.350 \text{ ksi}$$

- FIND BEND STRESS f_{by}

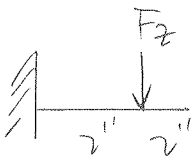

$$M_{by} = F_z \times 2 = 4411.68 \times 2 = 8823.36 \text{ lb-in}$$

$$S_y = \frac{bh^2}{6} = \frac{4 \times 1.5^2}{6} = 1.5 \text{ in}^3$$

$$f_{by} = \frac{M}{S} = \frac{8823.36}{1.5} = 5.882 \text{ ksi}$$

- FIND TESILE STRESS f_a

$$f_a = \frac{F}{A} \qquad F = 6240 \text{ lbs}$$

$$A = (4 \times 1\tfrac{1}{4}) - (2 \times 1\tfrac{1}{4})$$

$$= 2.5 \text{ in}^2$$

$$f_a = \frac{6240}{2.5} = 2.496 \text{ ksi}$$

- FIND COMBINED STRESS

$$\frac{f_a}{F_t} + \frac{f_{bx}}{F_{bx}} + \frac{f_{by}}{F_{by}} \leq 1.0$$

where $f_a = 2.496$ ksi

$F_t = \frac{1}{3} \times 36 = 12$ ksi

$f_{bx} = 1.350$ ksi

$F_{bx} = \frac{1}{3} \times 36 = 12$ ksi

$f_{by} = 5.882$ ksi

$F_{by} = 12$ ksi

$$\frac{2.496}{12} + \frac{1.350}{12} + \frac{5.882}{12} = 0.81 < 1$$

The safety factor on combined stress is

$$SF = \frac{1}{0.81} = 1.23.$$

- FIND THE TEAR OUT SHEAR STRESS. f_v''

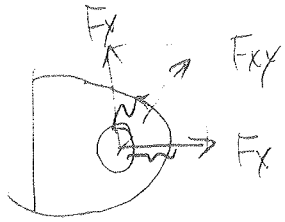

$$F_{xy} = \sqrt{F_y^2 + F_x^2}$$
$$= \sqrt{2700^2 + 6240^2}$$
$$= 6799 \text{ lbs.}$$

$$f_v'' = \frac{F_{xy}}{A} \quad \text{where } F_{xy} = 6799 \text{ lbs}$$
$$A = 2 \times 1.1875 \times 1.5 = 3.5625 \text{ in}^2$$

$$f_v'' = \frac{6799}{3.5625} = 1.908 \text{ ksi}$$

- FIND THE SAFETY FACTOR ON TEAR OUT SHEAR STRESS

$$F_v'' = 12 \text{ ksi}$$
$$f_v'' = 1.908 \text{ ksi}$$

$$SF = \frac{12}{1.908} = 6.3$$

- FIND THE BEARING STRESS f_p.

$$f_p = \frac{F_{xy}}{dt} = \frac{6799}{1 \times 1.5} = 4.5 \text{ ksi}$$

- FIND THE SAFETY FACTOR ON BEARING STRESS

$$F_p = 12 \text{ ksi} \qquad f_p = 4.5 \text{ ksi}$$

$$SF = \frac{12}{4.5} = 2.67$$

O CHECK THE DEFLECTION ON THE TUBING WALL

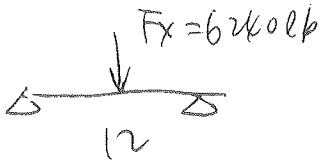

According to AISC, ASD, BEAM DIAGRAMS and formulas, page 2-298, knowing

$$\Delta_{max} = \frac{Pl^3}{48EI}$$

where $P = F_x = 6240\,lb$

$l = 12\,in$

$I = \frac{bd^3}{12}$ where $b = 8.25\,in$

$d_1 = 0.3125\,in$

$d_2 = 0.875\,in$

$$I = \frac{8.25}{12}\times(0.3125^3 + 0.875^3)$$

$$= 0.48\,in^4$$

$$\Delta_{max} = \frac{6240 \times 12^3}{48 \times 29 \times 10^6 \times 0.48}$$

$$= 0.016\,in$$

The allowable deflection is

$$\frac{l}{280} = \frac{12}{280} = 0.043\,in$$

therefore, the safety factor on deflection is

$$SF = \frac{0.043}{0.016} = 2.7$$

REV.	DESCRIPTION	DRAWN	DATE
		APPROVED	DATE

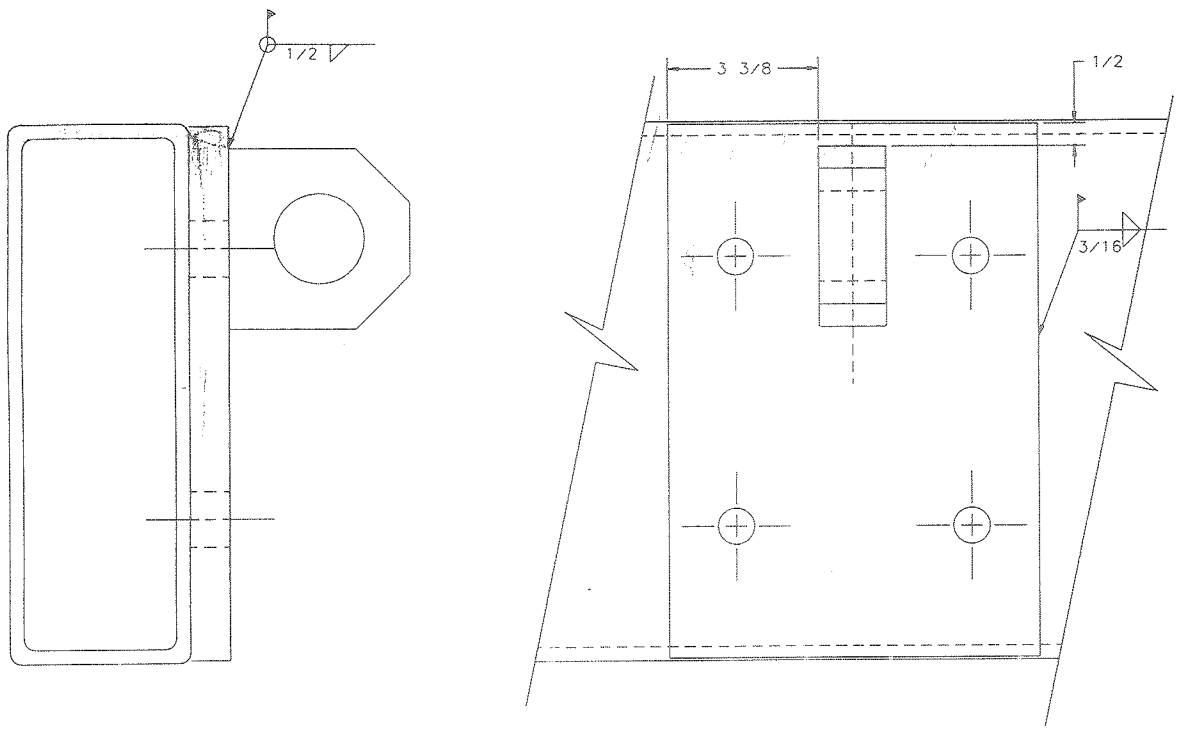

ITEM NO.	PART NO.	DESCRIPTION OR SIZE	QTY. REQ.

PARTS LIST

UNLESS OTHERWISE SPECIFIED			ORIGINATOR	I. FANG	AUG99
.XX	.XXX	ANGLES	DRAWN	VIC MAJDANSKI	17AUG99
± .03	± .015	± ——	CHECKED		
			APPROVED		

1. BREAK ALL SHARP EDGES .015 MAX.
2. DO NOT SCALE DRWG.
3. DIMENSIONING IN ACCORD WITH ANSI Y14.5M-1982 STD'S.
4. ALL DIMENSIONS ARE IN INCHES

125 MAX ALL MACHINED SURFACES

USED ON ME-384094

MATERIAL PLATE, 7/8 THK A36 STEEL

FERMI NATIONAL ACCELERATOR LABORATORY
UNITED STATES DEPARTMENT OF ENERGY

PPD/MECHANICAL SUPPORT
MINOS STRONGBACK FIXTURE
OUTSIDE PLATE-SMALL

SCALE	DRAWING NUMBER	SHEET NO.	REV.
HALF	9213.300-MC-384105	OF 1	

Plotted by ing on 17 Jan 00 . File 384105-01-copy_of pff

0 DESIGN THE WELDS.

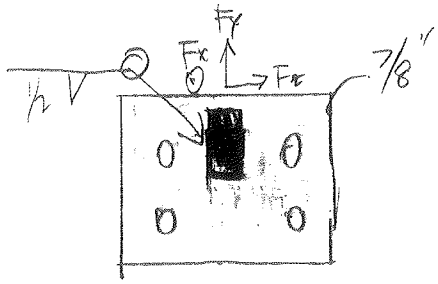

WELDS. E70XX

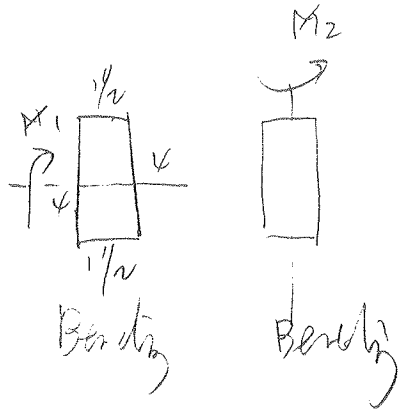

$F_x = 6240\,lb$ (Tension)

$F_y = 2700\,lb$ (shear)

$F_z = 4411.68\,lb$ (Shear)

$M_1 = F_y \times 2 = 2700 \times 2 = 5400\,lb\text{-}in$ (Bending)

$M_2 = F_z \times 2 = 4411.68 \times 2 = 8823.36\,lb\text{-}in$ (bending)

Tension: $f_x = \frac{F_x}{A_w} = \frac{6240}{(1.5+4)\times 2} = 567.27\,lb/in$

Shear: $f_{vy} = \frac{F}{A_w} = \frac{2700}{8} = 337.5\,lb/in$

Shear: $f_{vz} = \frac{F}{A_w} = \frac{4411.68}{3} = 1470.56\,lb/in$

Bending: $f_x' = \frac{M}{S_w} = \frac{5400}{bd + \frac{d^2}{3}} = \frac{5400}{(1.5\times 4) + \frac{4^2}{3}} = 476.47\,lb/in$

Bending: $f_x'' = \frac{M}{S_w} = \frac{8823.36}{(4\times 1.5) + \frac{1.5^2}{3}} = 1307.164\,lb/in$

$$f = \sqrt{(f_x + f_x' + f_x'')^2 + (f_{vy})^2 + (f_{vz})^2}$$

$$= \sqrt{(567.27 + 476.47 + 1307.164)^2 + 337.5^2 + 1470.56^2}$$

$$= 2.793 \text{ kip/in}$$

The allowable load

$$12 \times 0.707 \times 1/2 = 4.24 \text{ kip/in}$$

$$FF = \frac{4.24}{2.793} = 1.5$$

○ DESIGN THE WELD BETWEEN THE PLATE & TUBING.

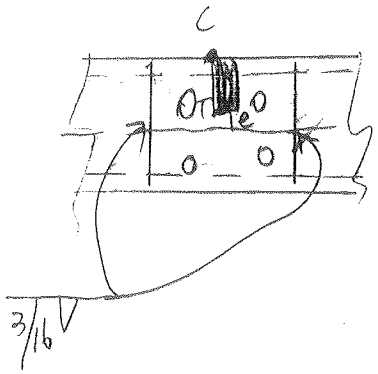

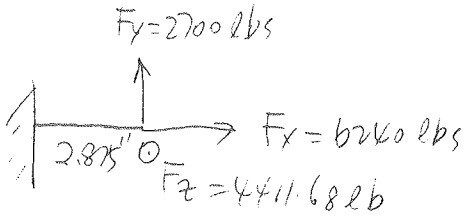

$F_x = 6240$ lbs (Tension)

$F_y = 2700$ lbs (shear)

$F_z = 4411.68$ lb (shear)

$$M = F_y \times 2.875 + (T \times e) = (2700 \times 2.875) + \left(\frac{2700 \times 2.875}{4} \times 1.4375\right)$$
$$= 10552.148 \text{ lb-in}$$

Tension: $f_x = \frac{F}{A_w} = \frac{6240}{11.875 \times 2} = 262.73$ lb/in

Shear: $f_{vy} = \frac{F}{A_w} = \frac{2700}{11.875 \times 2} = 113.68$ lb/in

Shear: $f_{vz} = \frac{F}{A_w} = \frac{4411.68}{11.875 \times 2} = 185.75$ lb/in

Bending: $f_x' = \frac{M}{S_w} = \frac{10552.148}{\frac{d^2}{3}} = \frac{10552.148}{\frac{11.875^2}{3}} = 224$ lb/in

$$f = \sqrt{(f_x + f_x')^2 + f_{vy}^2 + f_{vz}^2}$$
$$= \sqrt{(262.73 + 224)^2 + 113.68^2 + 185.75^2}$$
$$= 0.533 \text{ kip/in}$$

The allowable load

$$12 \times 0.707 \times 3/16 = 1.59 \text{ kip/in}$$

The safety factor is added:

$$SF = \frac{1.59}{0.533} = 3$$

Therefore, the design is adequate for this application.