BELOW-THE-HOOK LIFTING DEVICE
Engineering Note Cover Page

Lifting Device Numbers:

FNAL Site No.:_____ if applicable Div. Specific No.: 107 if applicable Asset No. _____ if applicable

ASME B30.20 Group: (check one)
- ˇ Group I Structural and Mechanical Lifting Devices
- ˇ Group II Vacuum Lifting Devices
- ˇ Group III Magnets, Close Proximity Operated
- ˇ Group IV Magnets, Remote Operated

Device Name or Description: MINOS NEAR STRONGBACK FIXTURE

Device was: (check all applicable)
- ˇ Purchased from a Commercial Lifting Device Manufacturer
  mfg. name: _____
- Designed and Built at Fermilab 9213.300-ME-384185
- ~~Designed by Fermilab and Built~~ by a Vendor
  Assy drawing number: _____
- ˇ Provided by a User or Other Laboratory
- ˇ Other. Describe: _____

Engineering Note Prepared by: INGRID FONA Date: 1/26/00

Engineering Note Reviewed by: [signature] Date: 1/26/00

Lifting Device Data:

Capacity: 8000 Lbs

Fixture Weight: 5400 Lbs

Service: ˇ normal ˇ heavy ˇ severe (refer to B30.20 for definitions)

Duty Cycle: _____ 8, 16 or 24 hour rating (applicable to groups III, and IV)

Inspections Frequency: _____

Rated Load Test by FNAL (if applicable): Date: 2/4/00 Load: 10000 Lbs

ˇ Check if Load Test was by Vendor and attach the certificate.

Satisfactory Load Test Witnessed by: T. J. SARLINA PPD ESH

Signature (of Load Test Witness): [signature]

Notes or Special Information:

Virginia job TD

OPERATION READINESS CLEARANCE FOR
LOAD TEST OF MINOS NEAR STRONGBACK
FOR 8000 LBS CAPACITY

Submitted By: INGRID FANG Date: Jan. 31, 2000

MINOS Mechanical Engineer: Ingrid Fang

REVIEWED AND APPROVED BY	DATE
Particle Physics Division Head	2/2/00
Particle Physics Senior Safety Officer	2 Feb 2000
Minos Safety Review Committee Chair	2/2/00
Minos Project Manager / Deputy Head	2/2/00

Comments/Exceptions:

Comments/Exceptions:

Comments/Exceptions: Minor changes need to be made to the procedure. Workers need to be trained on procedure before lift.

Comments/Exceptions:

Electronic approvals for this form are acceptable. Please forward your responses to all recipients. A signed paper form of this document will exist in the Minos ORC Sign off Book.

EXIT

FIRE DOOR KEEP CLOSED
FIRE DOOR KEEP CLOSED

PPD Work Plan/Hazard Analysis

JOB NAME: Move Near SB into NMS

LOCATION: NMS

ESTIMATED START DATE: January 7, 2000

ESTIMATED JOB DURATION OR END DATE: 4 hours

DESCRIPTION OF WORK:

Move the near strongback into the New Muon Lab using two forklifts. The strongback must be rigged at an angle to fit into the door. After the strongback is inside it is transferred to the building crane and moved off the loading dock. The attached procedure is to be used for this operation.

ASSOCIATED HAZARDS:

1. Lifting heavy objects.
2. Clark forklift close to edge of dock.
3. Tipping of forklift.
4. Coordination of the two forklifts.
5. Interference of Clark forks with crane lift.
6. Clark truck backing down the ramp with load.
7. Hyster lift truck mast hits building

PLANNED MITIGATION OF HAZARDS:

(match mitigation # to hazard # above)

1. Use proper rigging technique. Use trained operators. Observers used to watch for clearances fitting through door.
2. Observer in position to notify driver of edge of dock.
3. Observers and drivers monitor closely the lift. Lift the strongback slowly.
4. The two drivers face each other and can communicate easily. Observers from the side monitor progress.
5. Raise Clark forks as high as possible. Observers monitor progress.
6. Driver and observer watch for progress.
7. Both driver and observer watch as truck approaches the building.

TASK SUPERVISOR: R. Morrison PHONE: X2851

WORK PARTY (NAMES, TITLES IN THIS TASK):

1. R. Morrison, task manager, forklift operator, crane operator
2. M. Mascione, forklift operator
3. R. Jones, rigger, observer
4. J. Kilmer, observer
5. I. Fang, observer

PREPARED BY: J. Kilmer/R. Morrison DATE: Jan. 5, 2000

APPROVED BY: R. Plunkett **DATE:** 1/6/00

DETAILS ON NOTIFICATION / APPROVAL BY OTHER DIVISIONS

None

SIGNATURE LIST OF WORKERS INVOLVED IN THIS TASK

My supervisor has reviewed this Work Plan & Hazard Analysis with me and I understand the hazards and required precautionary actions. I will follow the requirements of this plan or notify my supervisor if I am unable to do so.

Name (print)	ID#	Signature	Date

Procedure to Transport the Near Detector Strongback into New Muon Lab

December, 1999

R. Morrison

Difficulties and Considerations

- The strongback measures approximately 14 feet by 19 feet. The New Muon Lab overhead door has an inside dimension of 13 feet 8 inches in width by 13 feet 6 inches in height.
- The strongback weight is approximately 5400 lbs.
- A sloped ramp begins eight feet beyond the overhead door. The 13 foot 6 inch door opening height is diminished when considering the 5 inch in 6 foot ramp angle.
- The building overhead crane hoist can travel to a point 12 feet from the overhead door. Ideally the strongback should be transported at least twelve feet inside the building before it can be handled solely by the building crane.
- Equipment necessary for transport:
    - Yellow Hyster lift truck: 9' fork length, 40,000 lb capacity
    - Green Clark lift truck: 4' fork length, 8,000 lb capacity
    - Slings, binders, clamps
- The Hyster mast will be too tall to enter the building.

Transport Procedure

1. Move the shield blocks from the end of the loading dock. All of the available length of the dock will be required for this procedure.
2. The Hyster lift truck will stage the strongback in the yard on a line with the ramp and the building overhead door.
3. The two lift trucks will be used to lift the strongback from the ground. Slings of different lengths (approximately 4:1 ration) will be attached between the strongback and the lift truck forks. One machine will pick at points A and B and the other will pick at pick points C and D on the illustration. Note that longer slings will be used at points A and D so the strongback will roll to an angle of about 45 degrees when lifted.
4. The Clark machine will be positioned to enter the building first, backwards.
5. The Hyster machine will be positioned to follow with the strongback loaded towards the end of the forks.

    Because the Hyster can not enter the building, it is necessary to position the strongback towards the fork ends so the strongback center is moved far enough inside the building for the crane hoist to reach it 12 feet from the wall.

6. The lift truck forks are clamped and the strongback is tied back to the lift truck masts to secure the strongback as it is transported down the ramp towards the building.
7. Observers are positioned both to the front and back of the operation.
8. Lift the strongback carefully coordinating between the lift trucks. Watch out for tipping of the Clark truck.

9. When the strongback is in the air check that the angle is sufficient to make it through the door opening.
10. Drive the strongback slowly down the ramp and into the dock area.
11. The observer on the dock must watch the move and alert the Clark driver when the lift truck approaches the end of the dock.
12. When the strongback is on the dock and positioned, lower it to the floor on cribbing.
13. Remove the rigging from the fork trucks and move the Hyster out to the yard.
14. Close the overhead door if possible.
15. Rig the strongback using slings attached to points 1,2,3,4 as shown on the attached drawing.
16. Raise the forks on the Clark as high as they will go.
17. Lift the strongback using the crane and move it to the east as soon as it will clear the dock handrail.
18. When the strongback is clear to the east of the dock and forklift move it into the building and set it on the floor.

Scale: 1" = 2' <u>Illustration 1</u>

PP Area Denotes Strongback Pick Point (Ref)

Light Shade Denotes Strongback Main Beams

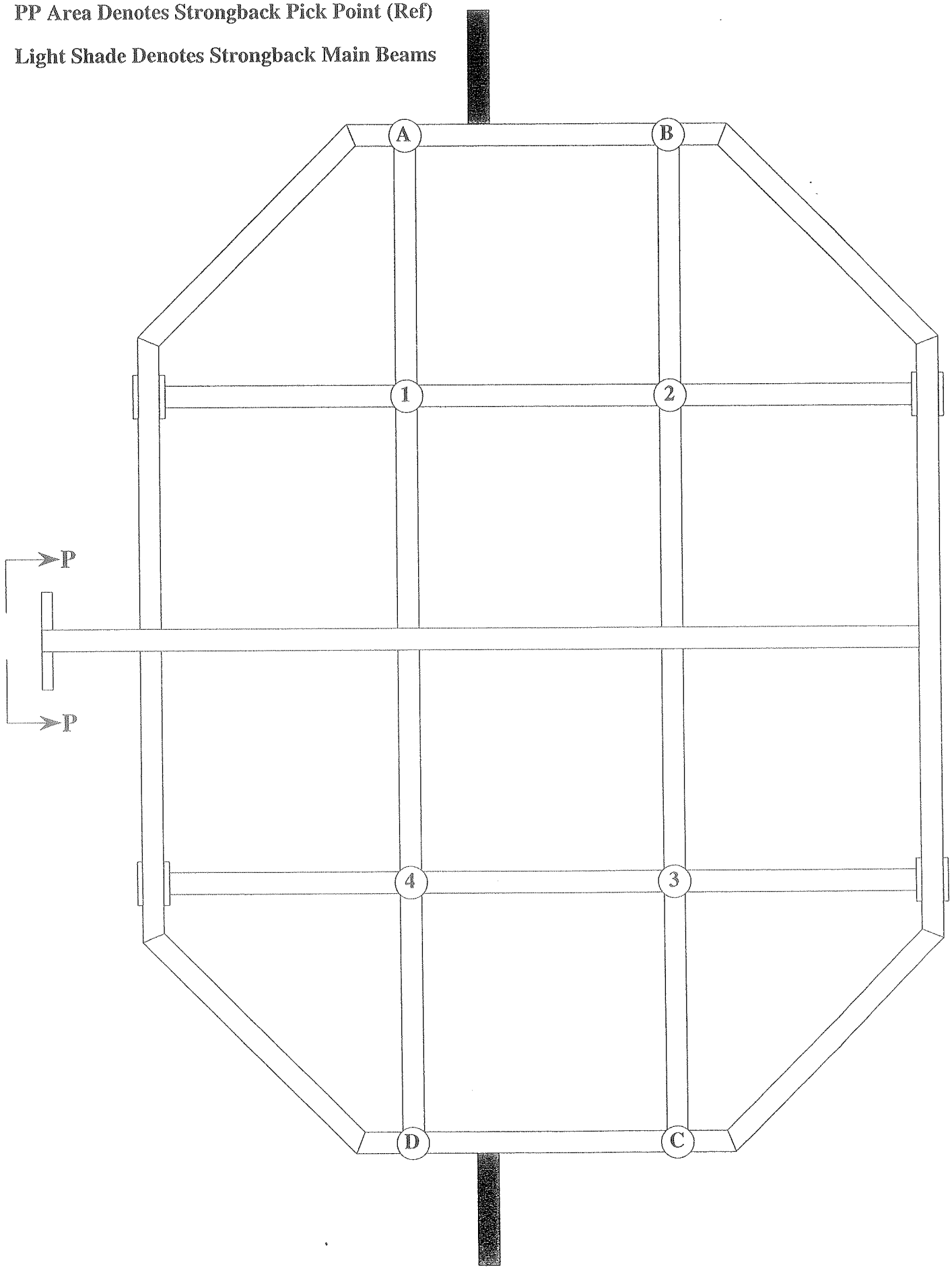
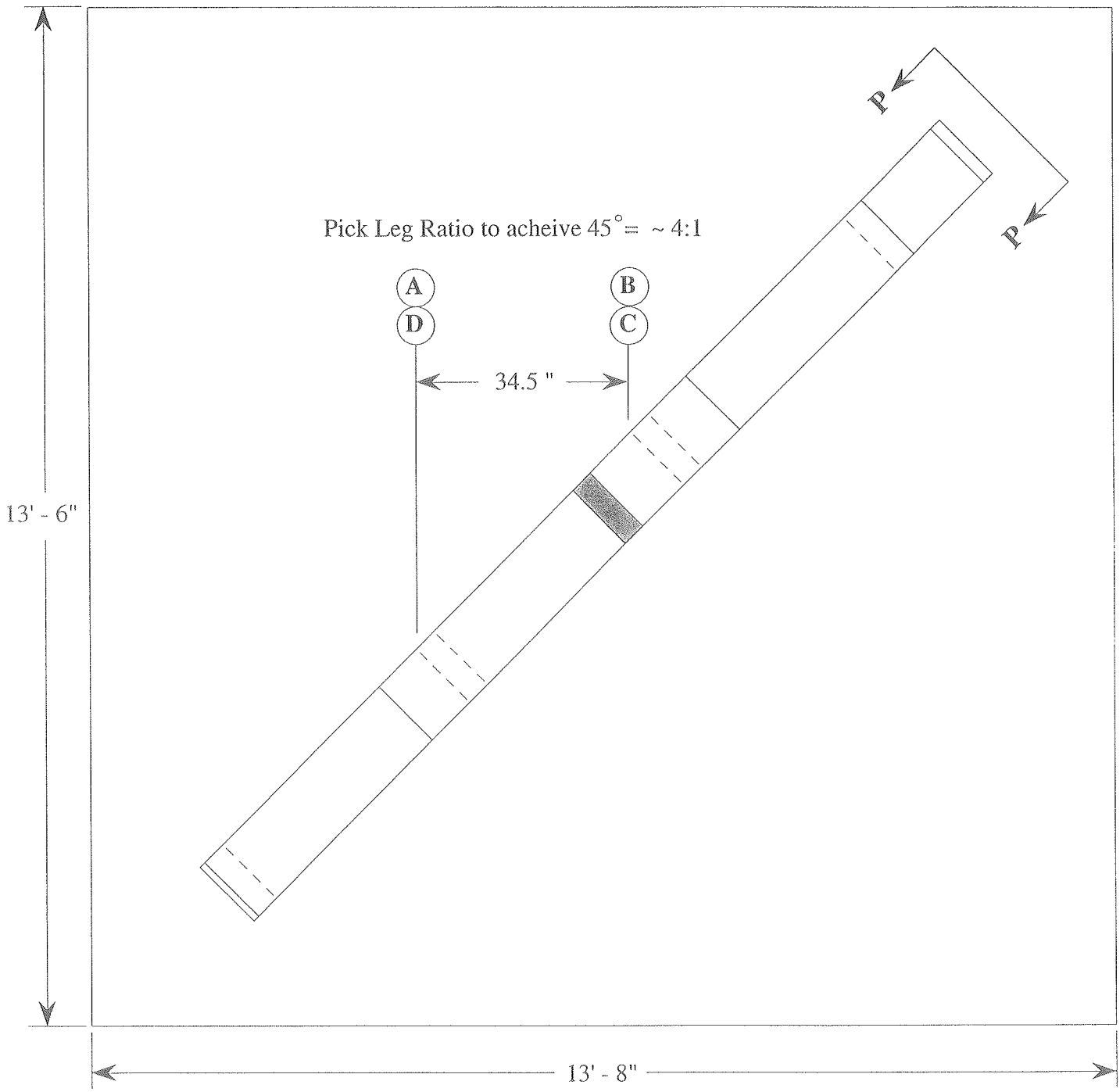
Scale: 1" = 2' **Illustration 2**