REV	DESCRIPTION	DRAWN	DATE
		APPROVED	DATE
A	REVISED CLAMPING DEVICE ASSEMBLY IN VIEW A-A TO SHOW STANDARD BOLT W/SLEEVE INSTEAD OF SHOULDER BOLT.	B. CYKO	09-26-99

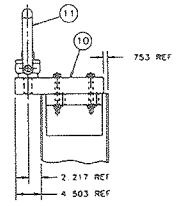

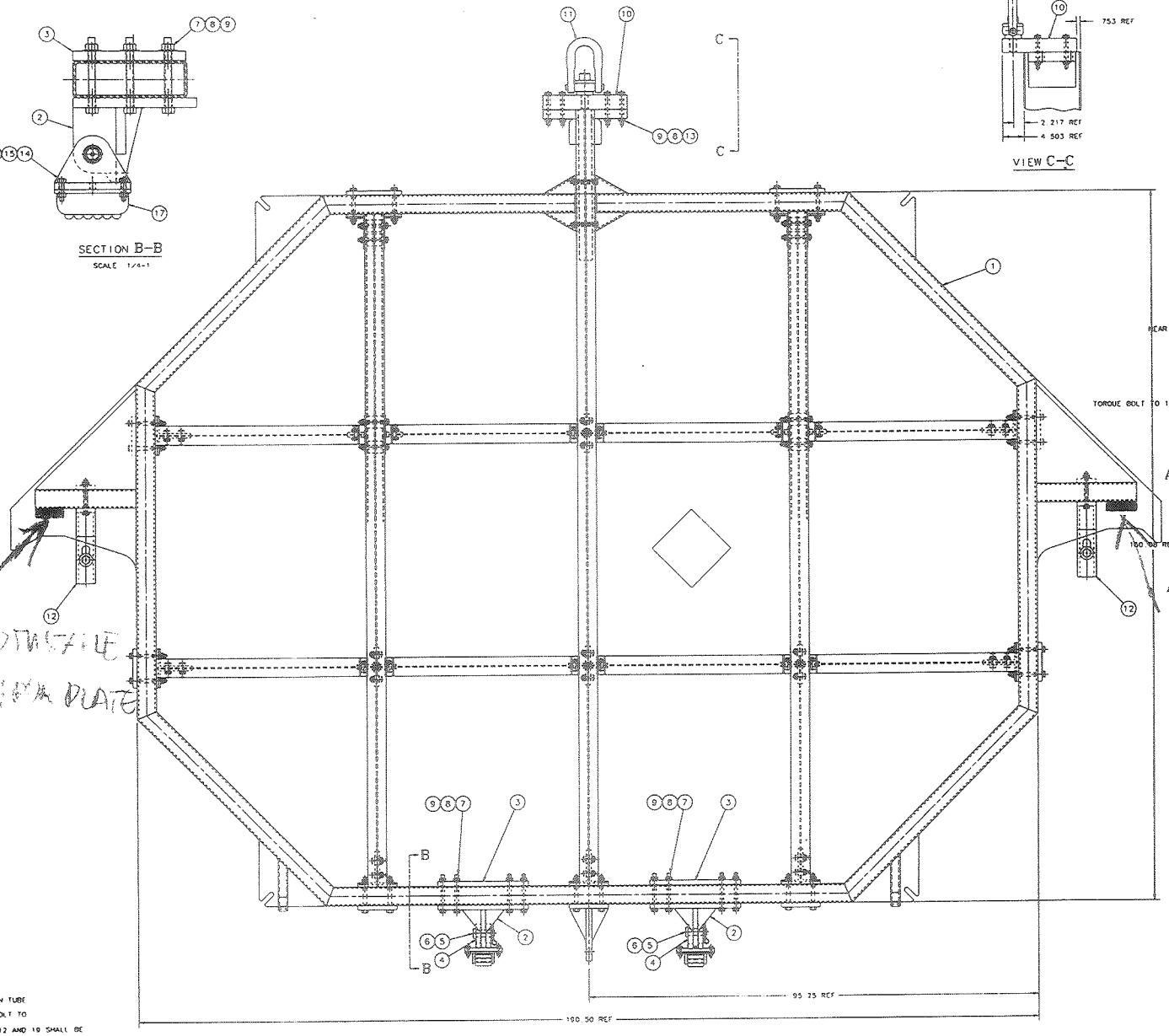

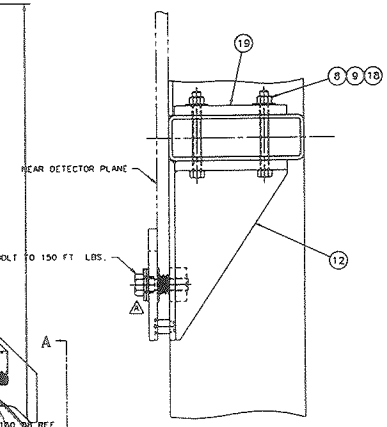

NOTES.

1- TORQUE THROUGH BOLTS IN TUBE CONNECTIONS 110 LB-FT
2- TIGHTEN HOIST RING BOLT TO A TORQUE OF 800 LB-FT
3- ITEMS 2, 3, 4, 5, 10, 12 AND 19 SHALL BE PAINTED AS FOLLOWS
EXCEPT FOR LABEL AND SURFACES WITHIN 2 INCHES OF ANY WELD, OPERATING PARTS, FINISHED SURFACES AND ALL OTHER NOT CONCEALED STEEL PARTS SHALL BE
THOROUGHLY CLEANED OF ALL SCALE, RUST AND DIRT PER SPECIFICATIONS OF THE STEEL STRUCTURE PAINTING COUNCIL (SSPC) "SURFACE PREPARATION SPECIFICATION NO. 3.(SP-3) POWER TOOL CLEANING".
PRIMED WITH SYNTHETIC, QUICK-DRYING, RUST-INHIBITING FERROUS METAL PRIMER GLIDDEN 5205 GLID-GUARD TANK AND STRUCTURAL PRIMER.
PAINTED WITH TWO COATS OF INTERIOR SEMI-GLOSS DOORLESS, ALKYD ENAMEL GLIDDEN 4200 SPREAD ULTRA SEMI-GLOSS ENAMEL. COLOR SHALL BE "MASSEY FERGUSON RED". INCLUDE 1 GALLON OF FINAL PAINT WITH SHIPMENT (FOR TOUCH-UP)

APPROX. WT. - 5400 LBS

ITEM NO	PART NO	DESCRIPTION OR SIZE	QTY. REQ.
19	MD-384164	PLATE, REAR BOLTING	2
18	COML	BOLT, 3/4-10UNC x 7 LG. HX HD, ASTM A325 TYPE 1	4
17	COML	ROLLER, DT, HILMAN 75-DT, CAP 5 TONS	2
16	COML	BOLT, 1/2-13UNC x 2 LG. HX HD ASTM A325 TYPE 1	12
15	COML	WASHER, FLAT 1/2, FOR 1/2 BOLT ASTM F436 HARDENED	12
14	COML	NUT, 1/2-13UNC-2B HX HD ASTM A194 GRADE2	12
13	COML	BOLT, 3/4-10UNC x 8 1/2 LG. HX HD, ASTM A325 TYPE 1	8
12	MC-384178	CLAMPING DEVICE ASSEMBLY	2
11	COML	SWIVEL HOIST RING, 1 1/2-6 UNC BOLT, 24000 LB. CAPACITY 2:1 SHANK, WORMSTOR-CARR P/N 3403174	1
10	MC-384158	PLATE	1
9	COML	WASHER, FLAT 3/4, FOR 3/4 BOLT ASTM F436 HARDENED	36
8	COML	NUT, 3/4-10UNC-2B HX HD ASTM A194 GRADE2	36
7	COML	BOLT, 3/4-10UNC x 7-1/2 LG. HX HD ASTM A325 TYPE 1	24
6	COML	PIN, HAIR, ZINC PLATED STL, SIZE # 243 5" LG. WORMSTOR-CARR P/N 3364114	2
5	MD-384126	PIN-ROLLER PIVOT	2
4	MC-384123	HILMAN ROLLER PIVOT WELDMENT	2
3	MC-384122	PLATE	2
2	MC-384118	PIVOT WELDMENT	2
1	MC-384094	STRONGBACK FIXTURE WELDMENT	1

PARTS LIST

UNLESS OTHERWISE SPECIFIED	DRAWN BY	I. FANG	AUG99
XX ±.— XXX ±.— XXXX ±.—	DRAWN	VIC MAJDANSKI	17AUG99
	CHECKED	C. NILA	09-00-99
BREAK ALL SHARP EDGES .015 MAX. DO NOT SCALE DRAWING	APPROVED	INGRID FANG	09-00-99
DIMENSIONS ARE IN INCHES	NEED ON		
ALL DIMENSIONS ARE IN INCHES	MATERIAL	SEE PARTS LIST	
✓ MRR ALL MACHINED SURFACES			

FERMI NATIONAL ACCELERATOR LABORATORY
UNITED STATES DEPARTMENT OF ENERGY

PPD/MECHANICAL SUPPORT
MINOS-NEAR DETECTOR
STRONGBACK FIXTURE ASSEMBLY

SCALE	DRAWING NUMBER		SHEET NO	REV
1/8	9213..	384185	1 OF 1	A

Plotted by ing 20-Jun-00 . File strongplate.plt

DESIGN THE NEW ADJUSTABLE EAR SUPPORT PLATE

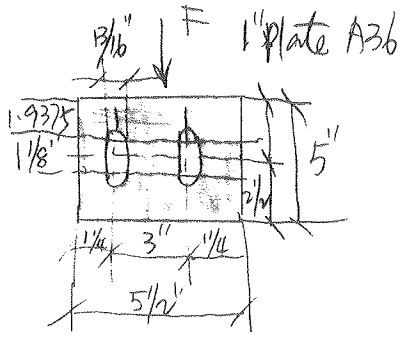

According to AISC, ASD, TABLE J3.1 page 5-71, knowing for 3/4" Bolt, long-slot size is 13/16" x 1 7/8"

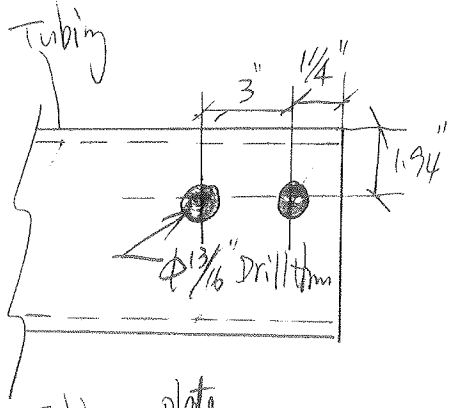

According to AISC, ASD, Table J3.6, page 5-76, knowing.

The edge Distance Increment C_2 is $\frac{3}{4}d$.

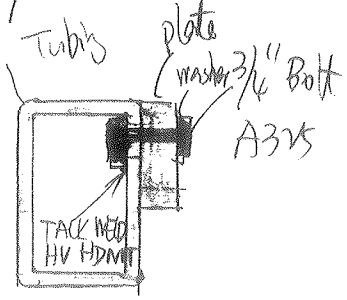

Therefore, the distance from the center of an slotted hole to an edge of a connected hole is.

$$d' + \frac{3}{4}d$$

Where $d' = 1\frac{1}{4}$ for standard hole

$$\frac{3}{4}d = \frac{3}{4} \times \frac{3}{4} = 0.56''$$

$$d' + \frac{3}{4}d = 1.25 + 0.56 = 1.8125''$$

Bolt length

$$= \frac{5}{16} + 1 + 1 + \frac{5}{32}$$

$$= 2.46$$

USE 2 1/2" long Bolt

- FIND THE SHEAR STRESS ON THE BOLT.

knowing $F_V = 3241$ lbs

$$f_V = \frac{\frac{1}{2}F_V}{A} = \frac{\frac{1}{2} \times 3241}{\frac{1}{4} \times \pi \times 3/4^2} = 3.668 \text{ ksi}$$

- FIND THE ALLOWABLE SHEAR STRESS ON THE BOLT

According to AISC, ASD, TABLE 1-D, page 4-5, knowing, For A325 Bolt 3/4" dia, Slip critical Connection, long-slotted hole, the allowable shear stress is

$$F_V = 12 \text{ ksi}$$

- FIND THE SAFETY FACTOR ON SHEAR STRESS

$$SF = \frac{12}{3.668} = 3.27$$

- FIND THE BOLT BEARING STRESS f_p'

$$f_p' = \frac{F}{A} \quad \text{where } F = \frac{1}{2} \times 3241 = 1620.5 \text{ lbs}$$

$$A = d \times t = \frac{3}{4} \times 1 = 0.75 \text{ in}^2$$

$$f_p' = \frac{1620.5}{0.75} = 2.160 \text{ ksi}$$

- FIND THE ALLOWABLE BOLT BEARING STRESS F_p'

According to AISC, ASD, TABLE I-E, page 4-6, known, $F_p = 1.2 F_u$.

where $F_u = 58$ ksi for A36.

$$F_p = 1.2 \times 58 = 69.6 \text{ ksi}$$

According to ASME B30.20-1993, Below the Hook Lifting Devices, known.

$$F_p = \frac{1}{3} F_y = \frac{1}{3} \times 36 = 12 \text{ ksi} \text{ — governs}$$

- FIND THE SAFETY FACTOR ON BOLT BEARING STRESS

$$SF = \frac{12}{2.160} = 5.5.$$

- FIND THE PLATE BEARING STRESS f_p

$$f_p = \frac{F}{A} \quad \text{where } F = 3241 \text{ lbs}$$

$$A = 1 \times 5\tfrac{1}{2} = 5.5 \text{ in}^2$$

$$f_p = \frac{3241}{5.5} = 0.589 \text{ ksi}$$

- FIND THE ALLOWABLE PLATE BEARING STRESS F_p.

According to AISC, ASD, J8, page 5-79, knowing

$$F_p = 0.90 F_y \quad \text{where } F_y = 36 \text{ ksi for A36}$$

$$F_p = 0.90 \times 36 = 32.4 \text{ ksi}$$

According to ASME, B30.20-1993, Below the Hook Lifting Devices, knowing,

$$F_p = \tfrac{1}{3} F_y = \tfrac{1}{3} \times 36 = 12 \text{ ksi} \text{ — governs}$$

- FIND THE SAFETY FACTOR ON PLATE BEARING STRESS

$$SF = \frac{12}{0.589} = 20.4$$

In conclusion, the design as sketched is accurate.

○ Preload the Bolt. (Torque)

Known: $F = 3241\ lb$.

$f = \mu_o \times N$. where $\mu_o = 0.39$

$f = 3241\ lb$

$$N = \frac{f}{\mu_o} = \frac{3241}{0.39} = 8310.25\ lbs$$

According to "Design of machine Elements" chapter 5, page 276. Known,

Torque required to produce desired clamping force is

$T = 0.195\, dw$

where $d = 0.75$ in for 3/4" dia Bolt

$W = N = 8310.25\ lbs$

$T = 0.195 \times 0.75 \times 8310.25$

$= 1215.375\ lb\text{-}in$

$= 101.28\ lb\text{-}ft$

use 150 lb-ft Torque.

REV.	DESCRIPTION	DRAWN	DATE
		APPROVED	DATE

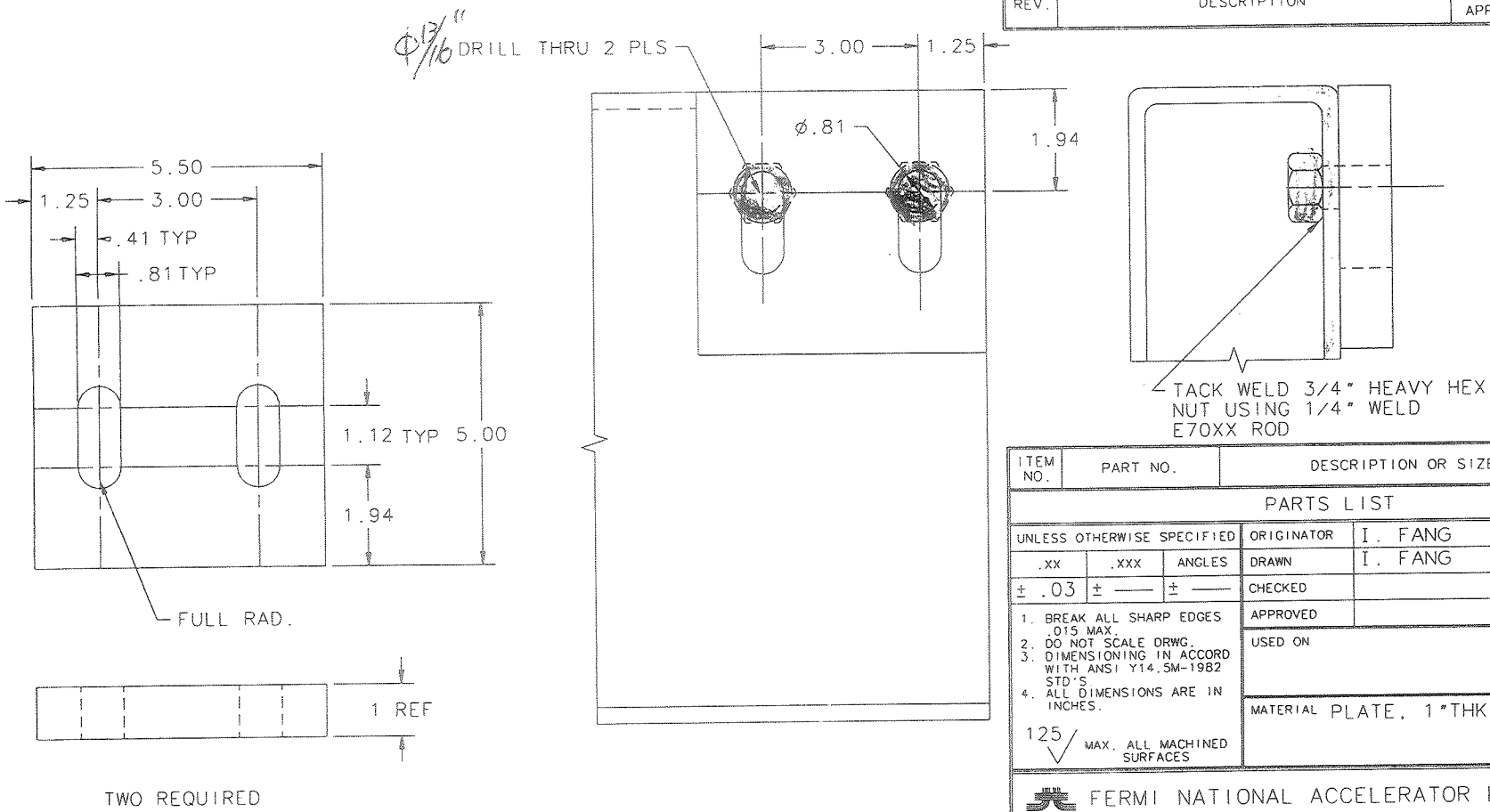

ITEM NO.	PART NO.	DESCRIPTION OR SIZE	QTY. REQ.

PARTS LIST

UNLESS OTHERWISE SPECIFIED					
.XX	.XXX	ANGLES	ORIGINATOR	I. FANG	JAN00
± .03	± ——	± ——	DRAWN	I. FANG	JAN 00
			CHECKED		
			APPROVED		

1. BREAK ALL SHARP EDGES .015 MAX.
2. DO NOT SCALE DRWG.
3. DIMENSIONING IN ACCORD WITH ANSI Y14.5M-1982 STD'S
4. ALL DIMENSIONS ARE IN INCHES.

125 √ MAX. ALL MACHINED SURFACES

USED ON

MATERIAL PLATE, 1"THK 1018 CRS

FERMI NATIONAL ACCELERATOR LABORATORY
UNITED STATES DEPARTMENT OF ENERGY

PPD/MECHANICAL SUPPORT
MINOS STRONGBACK FIXTURE
TOP CLAMPING PLATES

SCALE	DRAWING NUMBER	SHEET NO.	REV.
HALF		1 OF 1	

Plotted by ingridf on 24-Jan-00 . File earsupport.pff