BELOW-THE-HOOK LIFTING DEVICE
Engineering Note Cover Page

Lifting Device Numbers:

FNAL Site No/ _____ Div. Specific No. 136 Asset No. _____

If applicable — If applicable — If applicable

ASME B30.20 Group: (check one)

- [x] Group I — Structural and Mechanical Lifting Devices
- [ ] Group II — Vacuum Lifting Devices
- [ ] Group III — Magnets, Close Proximity Operated
- [ ] Group IV — Magnets, Remote Operated

Device Name or Description _____

Device was (check all applicable)

- [ ] Purchased from a Commercial Lifting Device Manufacturer. Mfg Name _____
- [x] Designed and Built at Fermilab
- [ ] Designed by Fermilab and Built by a Vendor. Assy drawing number _____
- [ ] Provided by a User or other Laboratory
- [ ] Other: Describe _____

Engineering Note Prepared by Dave Pushka Date 6 MARCH 2003

Engineering Note Reviewed by Arglee Date 3-26-03

Lifting Device Data:

Capacity 1 B2 MAGNET, 26,000 #

Fixture Weight < 1500 #

Service: [x] normal [ ] heavy [ ] severe (refer to B30.20 for definitions)

Duty Cycle ___n/a___ 8, 16 or 24 hour rating (applicable to groups III, and IV)

Inspections Frequency _____

Rated Load Test by FNAL (if applicable) Date 4-4-03 Load 32,500 #

[ ] Check if Load Test was by Vendor and attach the certificate

Satisfactory Load Test Witnessed by: JOHN VOIRIN #4940

Signature (of Load Test Witness) John Voirin

Notes or Special Information:

DESIGNED SPECIFICALLY FOR B2 MAGNET INSTALLATION FOR NuMI. PRE-TARGET TUNNEL

Fermilab

Particle Physics Division
Mechanical Department Engineering Note

Number: MD-ENG-03-005 Date: 6 March 2003

Project Internal Reference: none

Project: NuMI

Title: Magnet Lifting Fixture for the B2 Dipole NuMI Magnets in the Pre-Target Area

Author(s): Dave Pushka

Reviewer(s): Ang Lee

Key Words: Magnet Installation, Lifting Fixture

Abstract Summary: Stress and deflection calculations for the structural steel lifting fixture designed to be used for lifting the B2 Dipole magnets rolled 90 degrees.

This lifting fixture is to be used with the Pre-Target Installation Cart. It may also be used for lowering these B2 magnets down the shaft.

Applicable Codes: ASME B30.20 (Below-The-Hook Lifting Fixtures) used to define allowable stress at Fy/3.

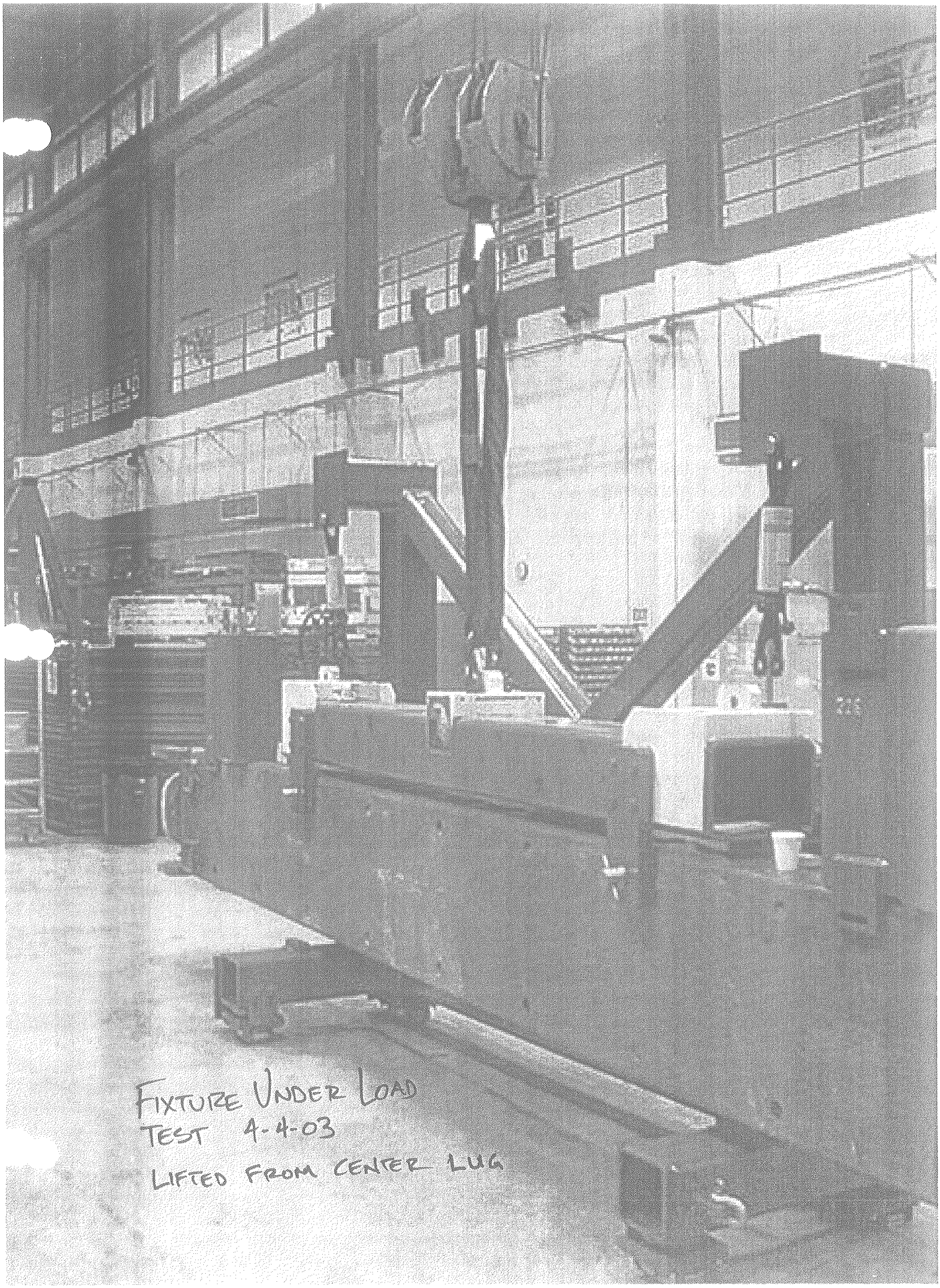
FIXTURE UNDER LOAD
TEST 4-4-03
LIFTED FROM CENTER LUG

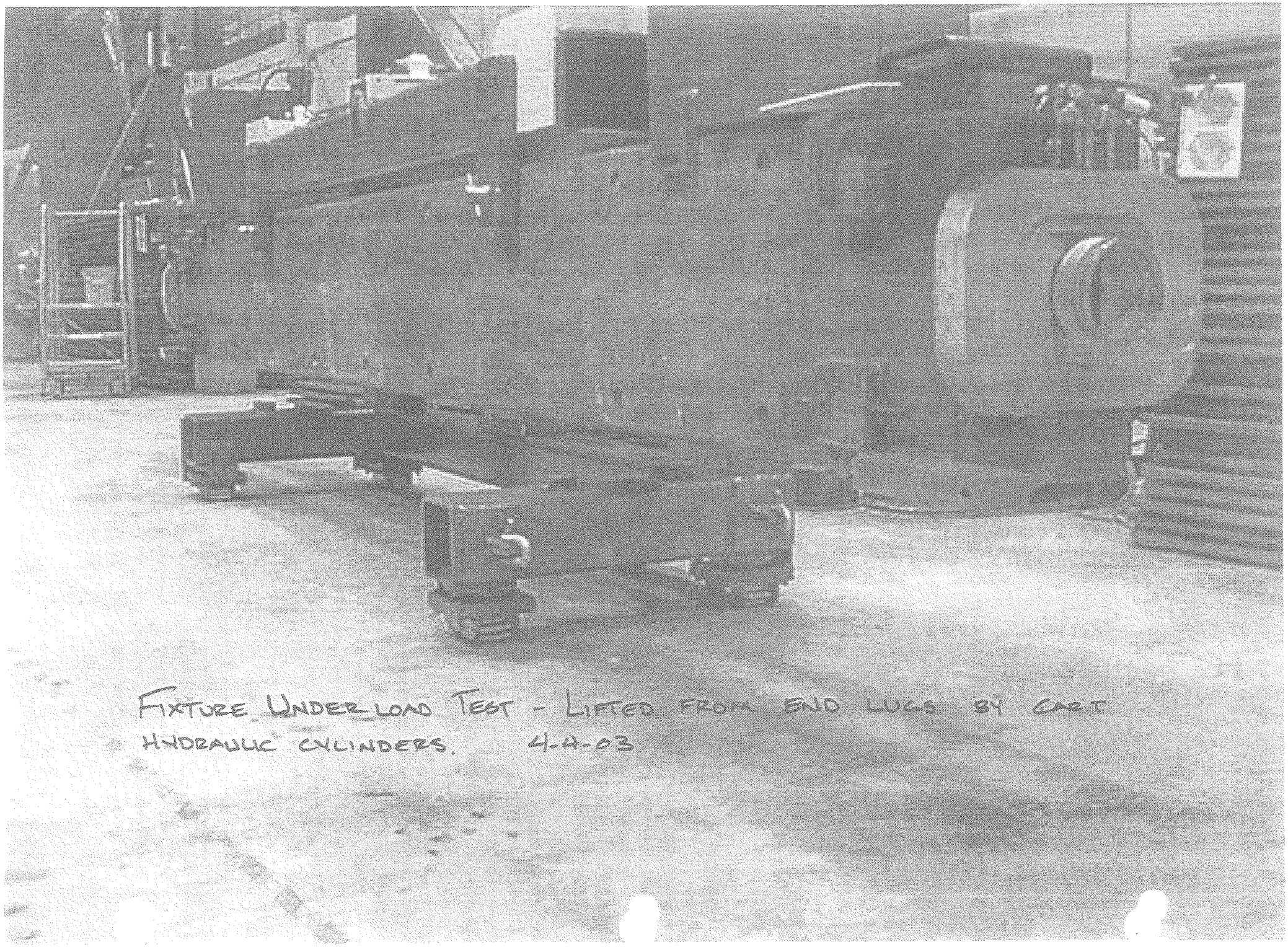

FIXTURE UNDER LOAD TEST - LIFTED FROM END LUGS BY CART HYDRAULIC CYLINDERS. 4-4-03

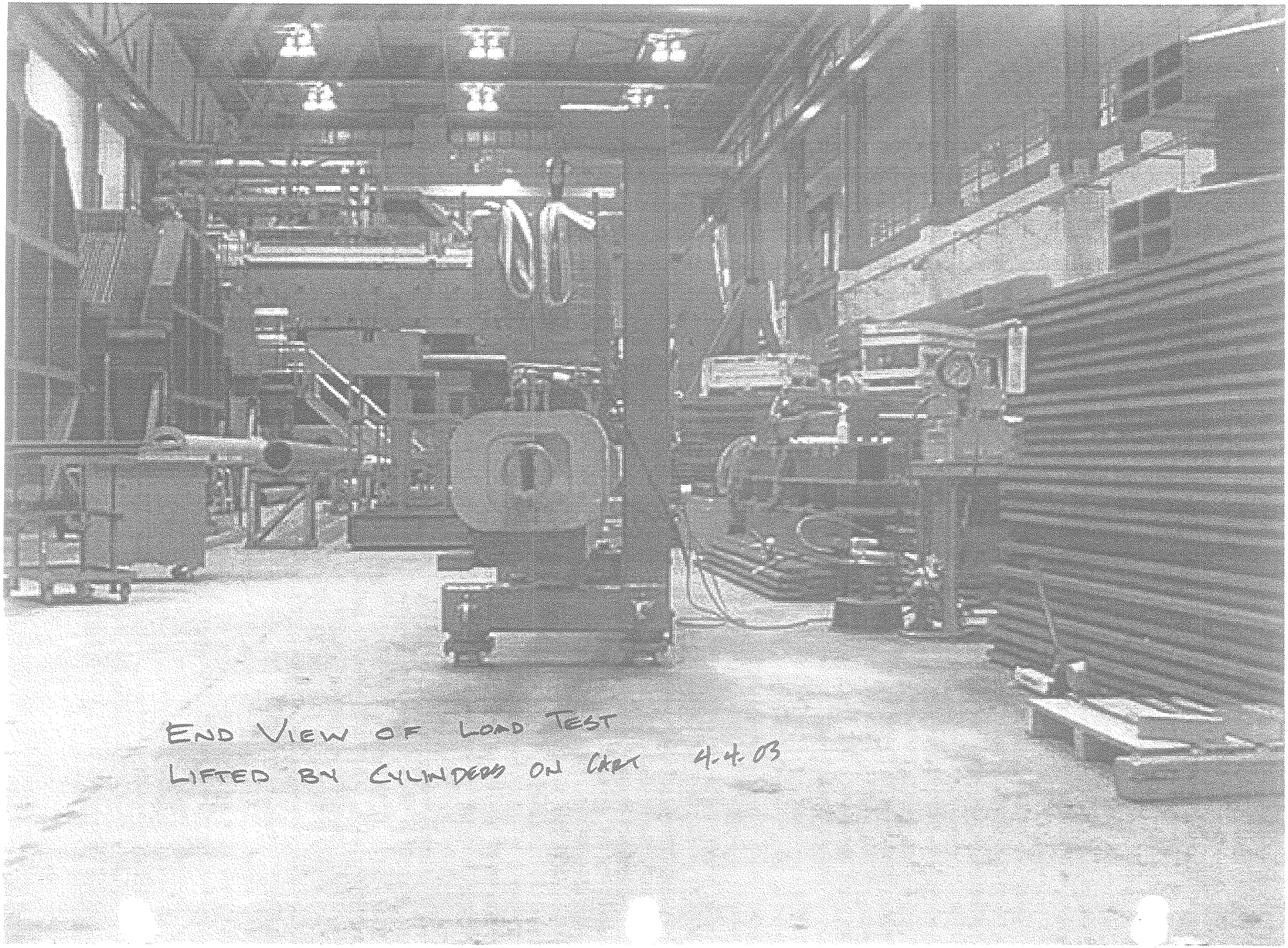

END VIEW OF LOAD TEST
LIFTED BY CYLINDERS ON CART 4-4-03

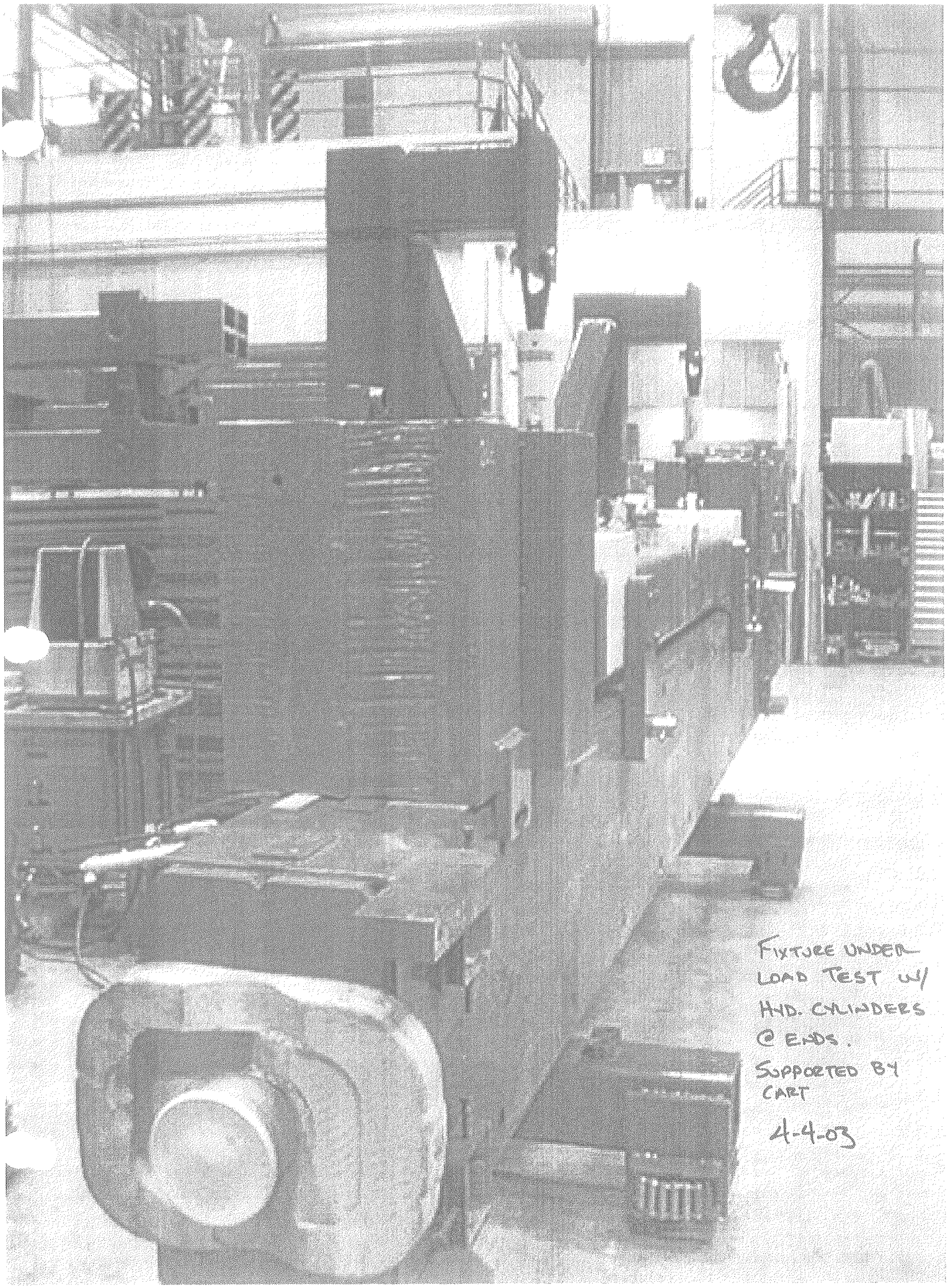

FIXTURE UNDER LOAD TEST W/ HYD. CYLINDERS @ ENDS. SUPPORTED BY CART

4-4-03

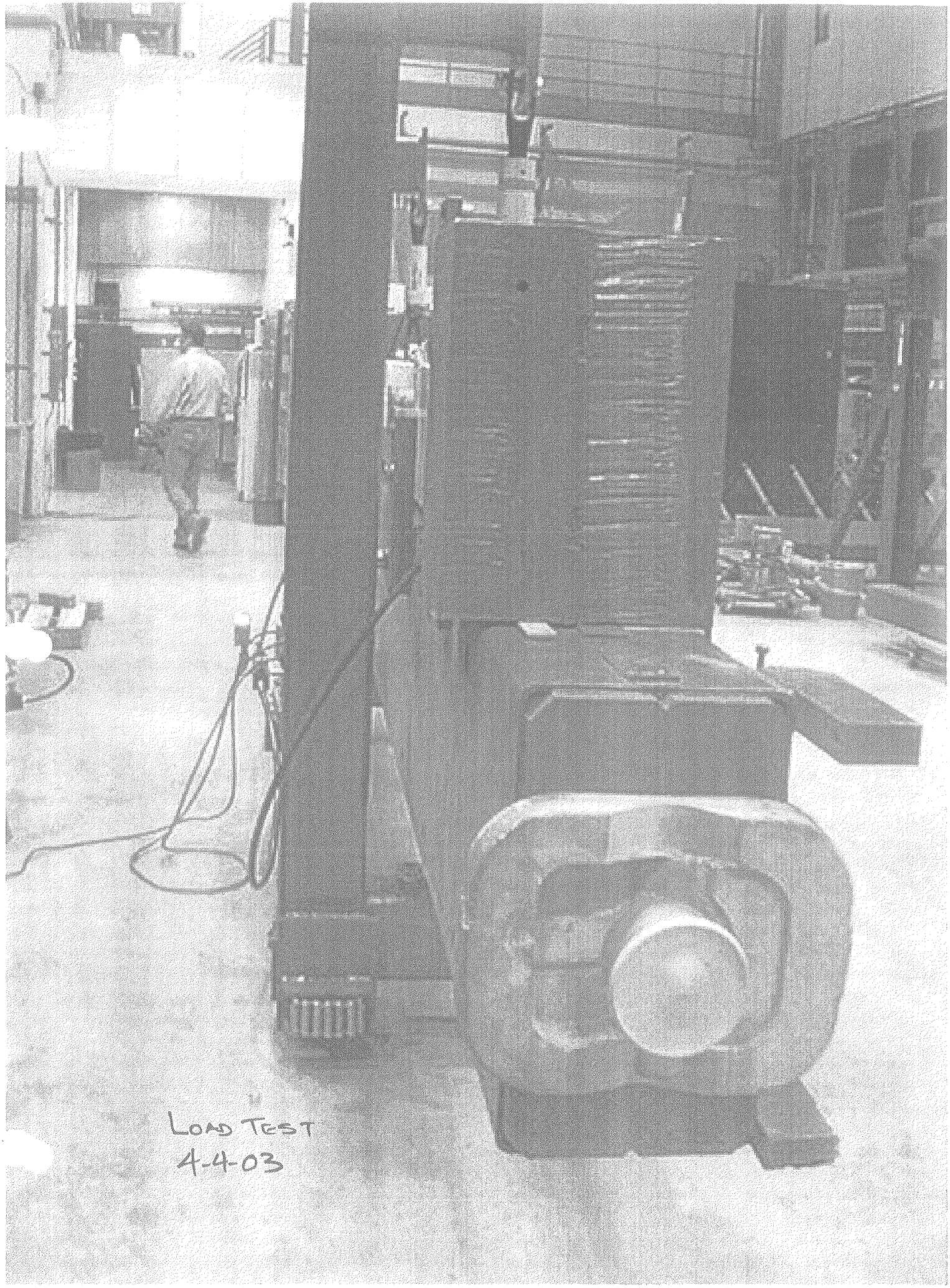
LOAD TEST
4-4-03

NuMI	6-4-02	Dave Pushka

Lifting Fixture for B2 Magnets:

6-4-02 | DANE PUSHKA

LIFTING FIXTURE B2 MAGNETS @ NuMI PRE-TARGET AREA.

B2's Wt = 25,200 POUNDS (12.6 TONS)

DESIGN FOR 28,000 # (14 TONS) CAPACITY

MAGNETS ARE TO BE INSTALLED ROLLED 90° FROM THAT USED IN THE OLD MAIN RING.

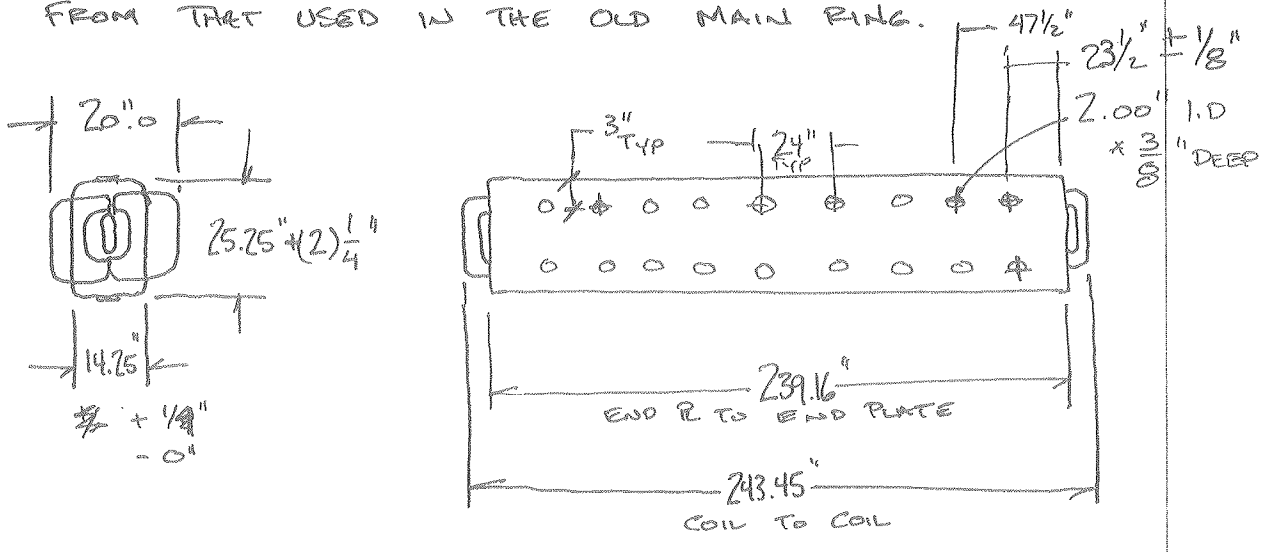

COIL CONNECTIONS & BALL FEET USED IN MAIN-RING ARE OMITED FOR CLARITY

ALIGNMENT PADS @ 15 TO 18" FROM EA. END

STENCILED Wt = 24,000 #

6-4-02 | Dave Pushka

B2 Lifting Fixture - Conceptual Side View

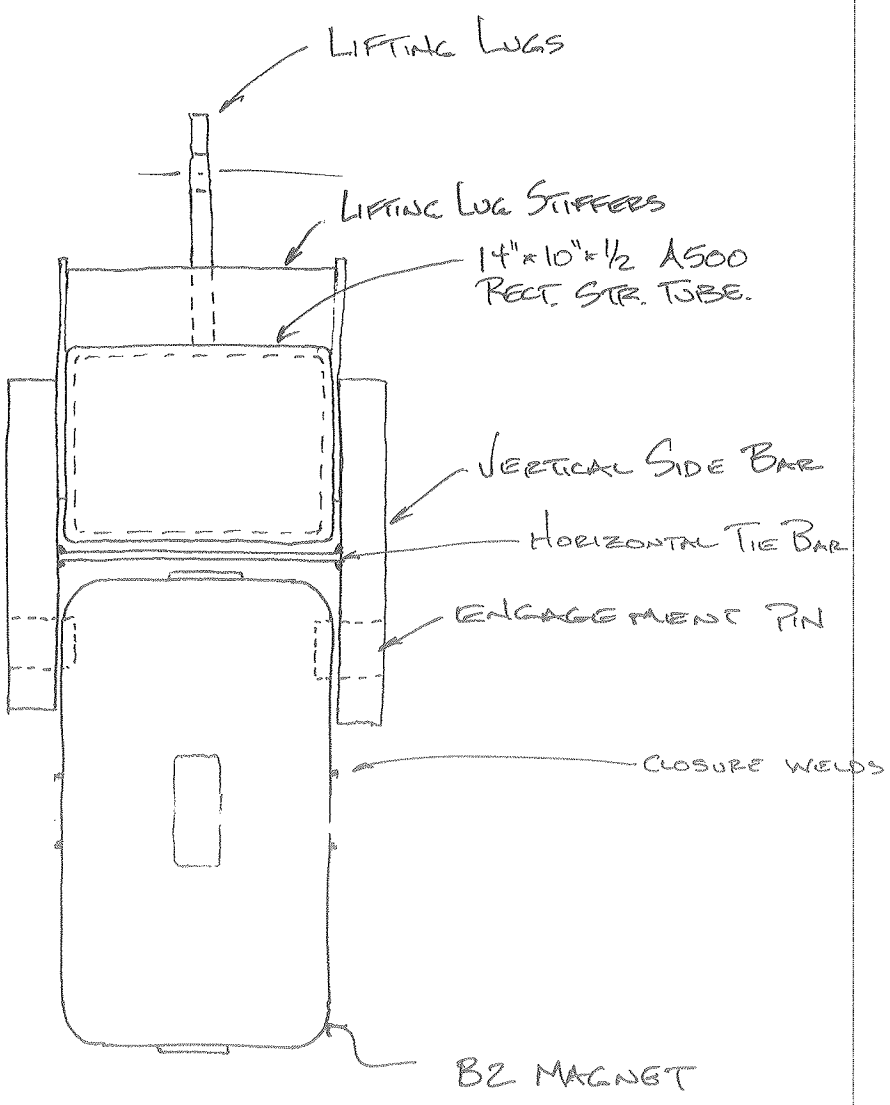

Cross. Section

6-4-02 | DAVE PUSHKA

B2 LIFTING FIXTURE - SIDE VERTICAL BARS

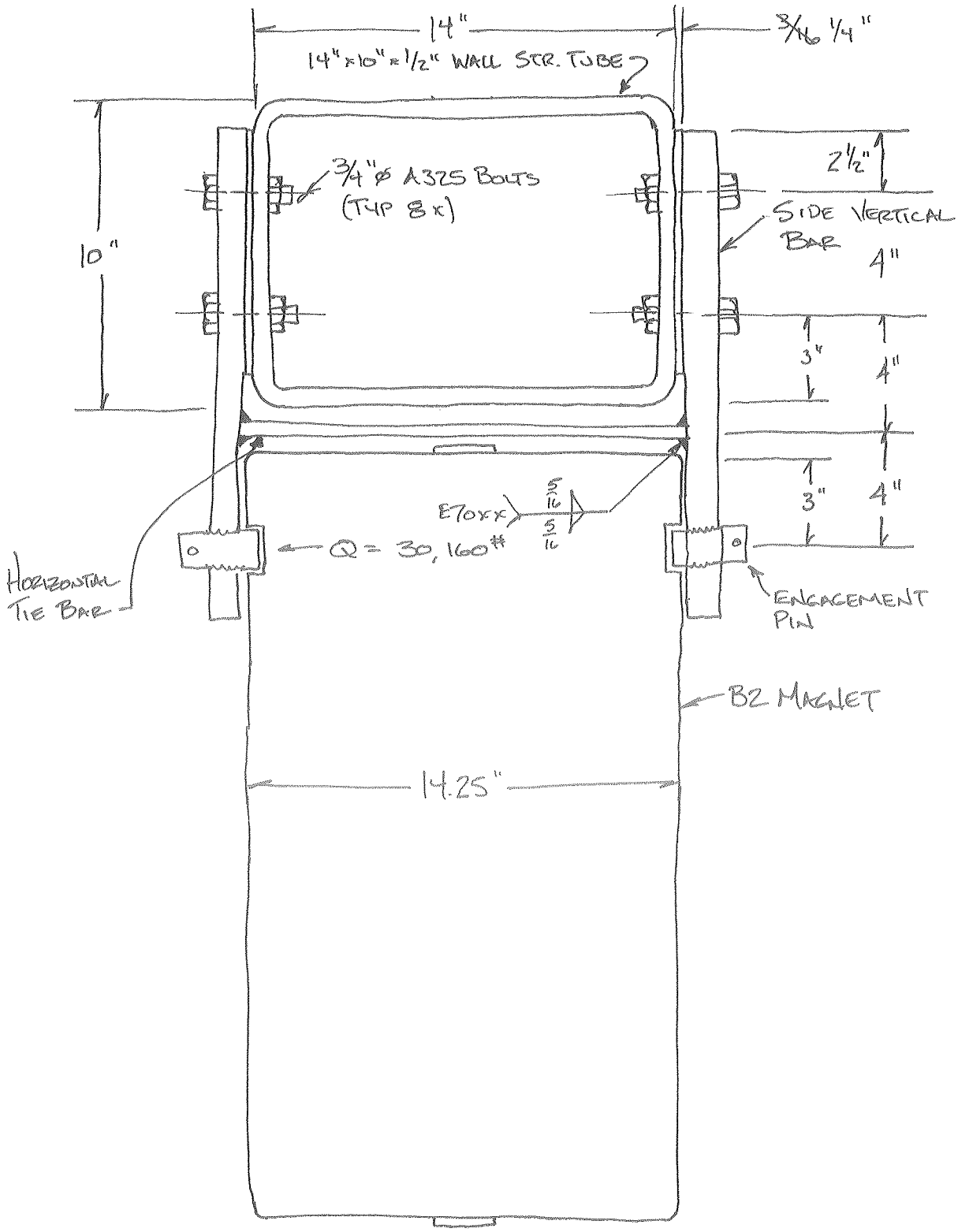

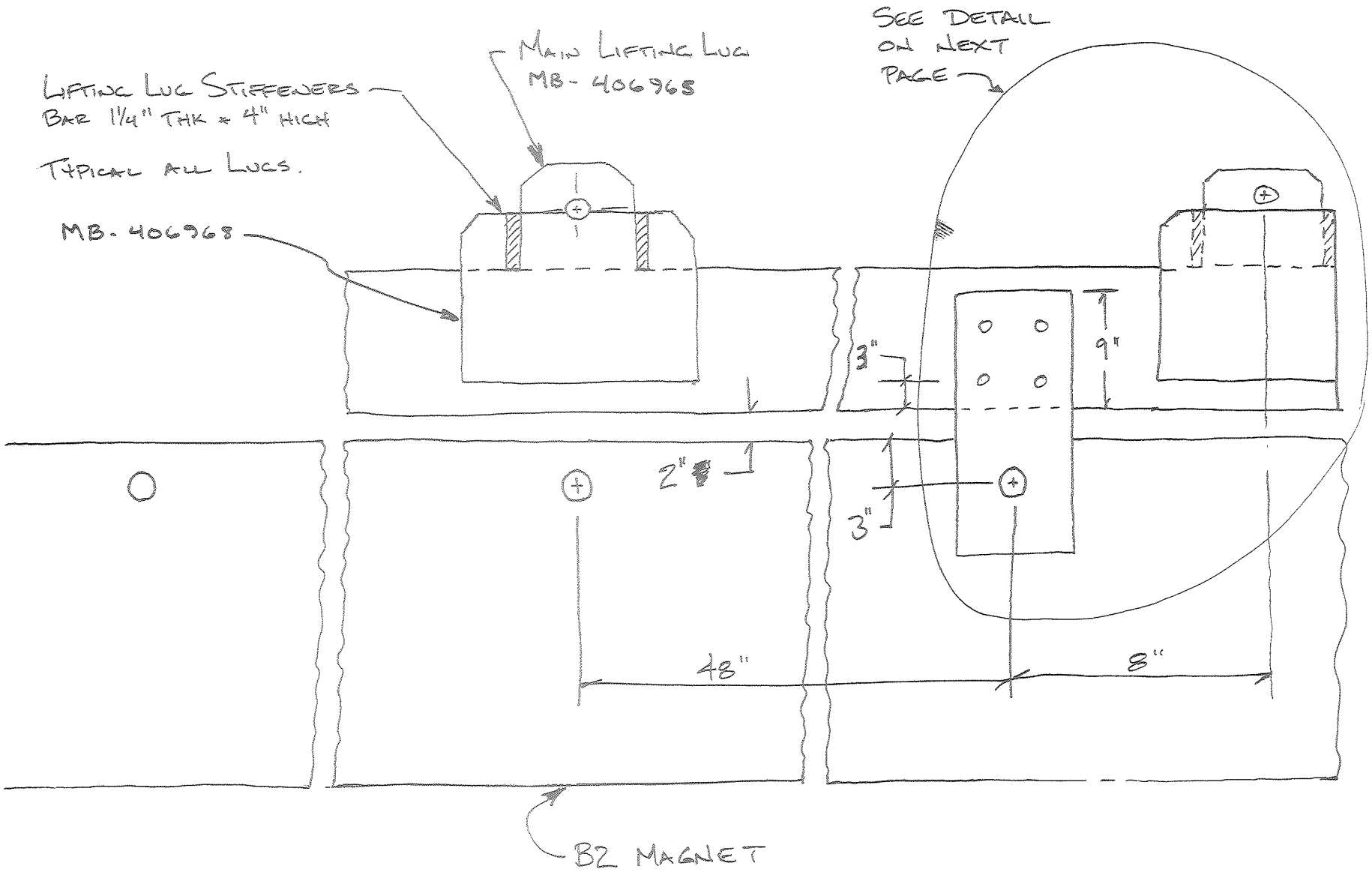

6-3-02

DAVE PUSHKA

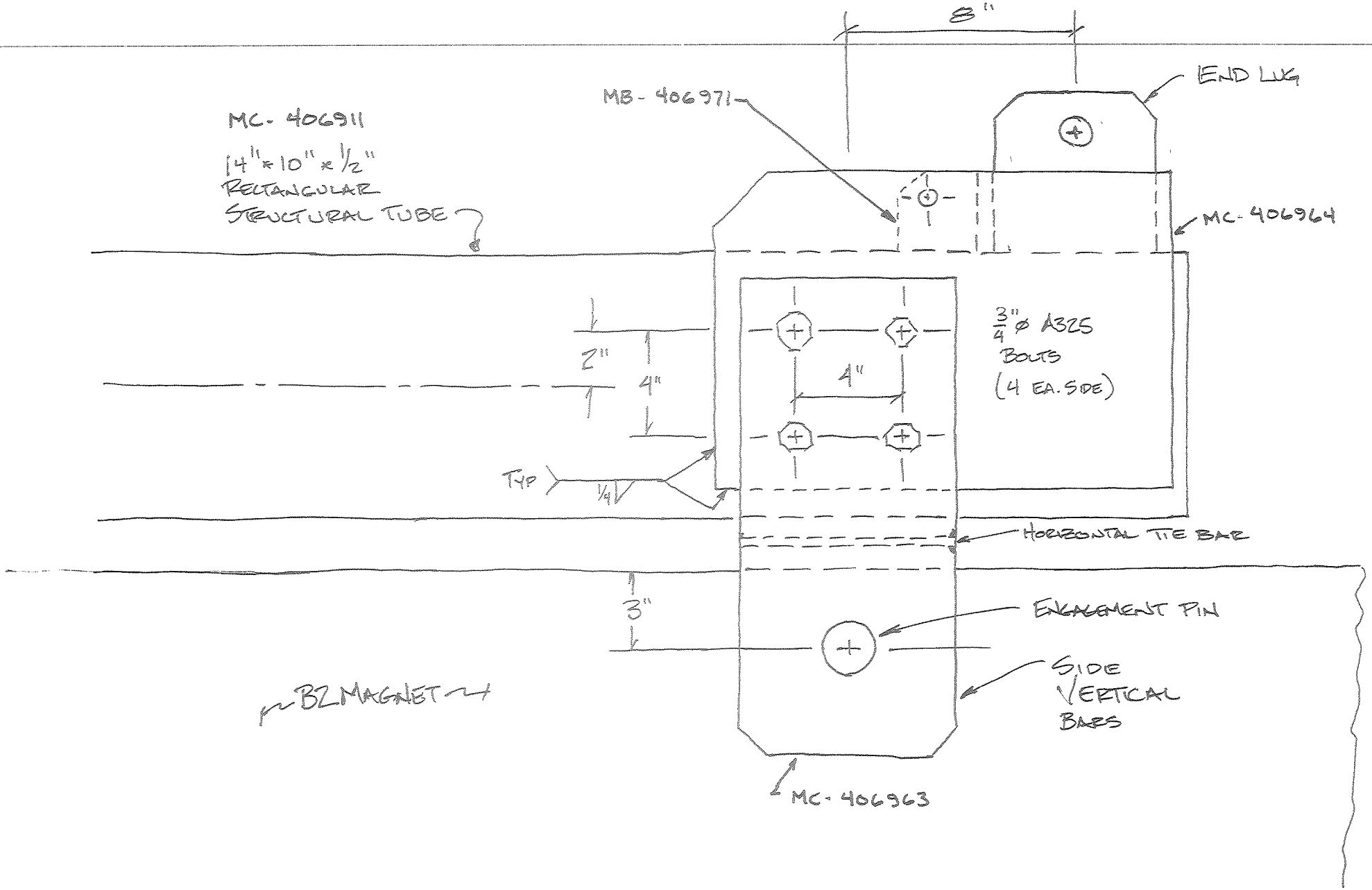

6-6-02

DAVE PUSHKA

LIFTING FIXTURE BACKBONE - B2 FIXTURE

TWO DESIGN CONDITIONS:

① MAGNET LIFTED BY CENTER LUG:

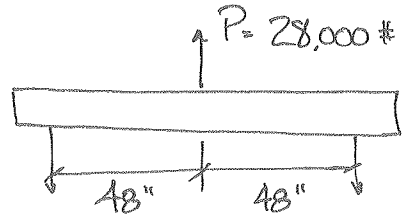

$$M_1 = \frac{Pl}{4} = \frac{(28{,}000\,\#)(96\,in)}{4}$$

$$= 672{,}000 \text{ IN-LBS}$$

② MAGNET LIFTED BY END LUGS:

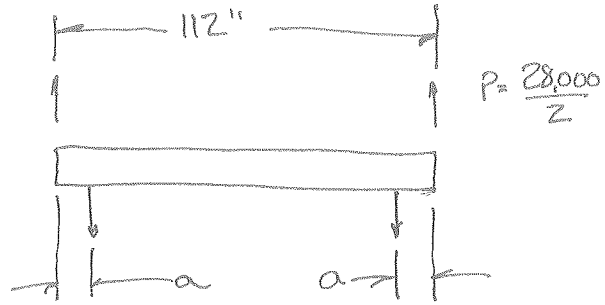

$$M_2 = Pa$$

$$= \left(\frac{28{,}000\,\#}{2}\right) 8\,in$$

$$= 112{,}000 \text{ IN-LBS}$$

THEREFORE, CONDITION ① DRIVES DESIGN

LIFTING FIXTURE BACKBONE - B2 FIXTURE

TRY (2) TWO 6 x 6 x 5/8" A500 STR. STEEL TUBES

$F_y = 46$ ksi

$S = 19.1\ in^3$
$I = 57.3\ in^4$ } PER TUBE

$$\sigma_B = \frac{M}{S} = \frac{672{,}000\ in\text{-}LBS}{2 \cdot 19.1\ in^3} = 17{,}591\ psi$$

$$F_{ALLOW\ B30.20} = \frac{F_y}{3} = \frac{45{,}000}{3} = 15{,}000\ psi$$

$\sigma_B > F_{ALLOW}$ ∴ N.G.

DETERMINE MINIMUM 'S'

$$\sigma_B = F_{ALLOW} = 15{,}000\ psi = \frac{M}{S} = \frac{672{,}000}{S}$$

$$S_{MIN} = 44.8\ in^3$$

A SINGLE 14" x 10" x 1/2" RECT. SECTION BENT THE WEAK WAY HAS A S_{YY} VALUE OF $72.3\ in^3$, $I_{YY} = 361\ in^4$

$$\sigma_B = \frac{672{,}000\ PSI\text{-}LBS}{72.3\ in^3} = 9294\ psi$$

$$\delta = \frac{Pl^3}{48EI} = \frac{(28{,}000\#)(96\ in)^3}{48 \cdot 29 \times 10^6\ psi \cdot 361\ in^4} = 0.049"$$

OK

SEE DWG MC-406911

B2 LIFTING FIXTURE - SIDE BARS TO TUBE

SHEAR ON BOLTS — $P = \frac{28000\#}{2 \text{ ENDS}} = 14{,}000\# / \text{END}$

USING 3/4"ø A325 BOLTS IN STD HOLES (1/16" OVERSIZE)

HAVE A SINGLE SHEAR CAPACITY OF 7.51KIPS (7510 #)
THEREFORE, (4) FOUR BOLTS WOULD BE MORE THAN SUFFICIENT TO TAKE THE SHEAR.

CHK ROTATION DUE TO ECCENTRIC LOAD ON INCLINE

$M = (7000\#)(\sin 8.5°)(10")$

$= 10{,}346$ IN-LBS

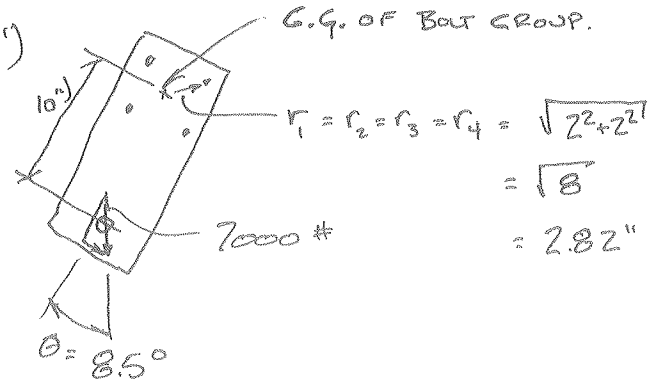

SHEAR PER BOLT TO RESIST THIS MOMENT IS:

$$V_B \cdot r = \frac{1}{4}M = \frac{10{,}346 \text{ IN-LBS}}{4}$$

$$V_B = \left(\frac{10{,}346}{4} \text{ IN-LBS}\right)\frac{1}{2.82 \text{ IN}} = 914 \text{ LBS.}$$

THIS IS SMALL — TOTAL SHEAR ON ONE BOLT $= \frac{14{,}000}{4} + 914$

$= 4414$ LBS

ALLOWABLE SHEAR $= 7510\# > 4414$ LBS $\therefore$ OK

MAGNET ENGAGEMENT PINS FOR B2 FIXTURE:

ASSUME PLAIN STEEL, $F_y = 30$ KSI $\therefore \sigma_{MAX\ ALLOW} = \frac{F_y}{3} = 10{,}000$ psi

ASSUME LOAD ON EACH PIN $= \frac{Wt}{4} = \frac{28{,}000\#}{4} = 7000\#$

TRY A 2¼" DIA PIN W/ 8 SERIES THREADS:

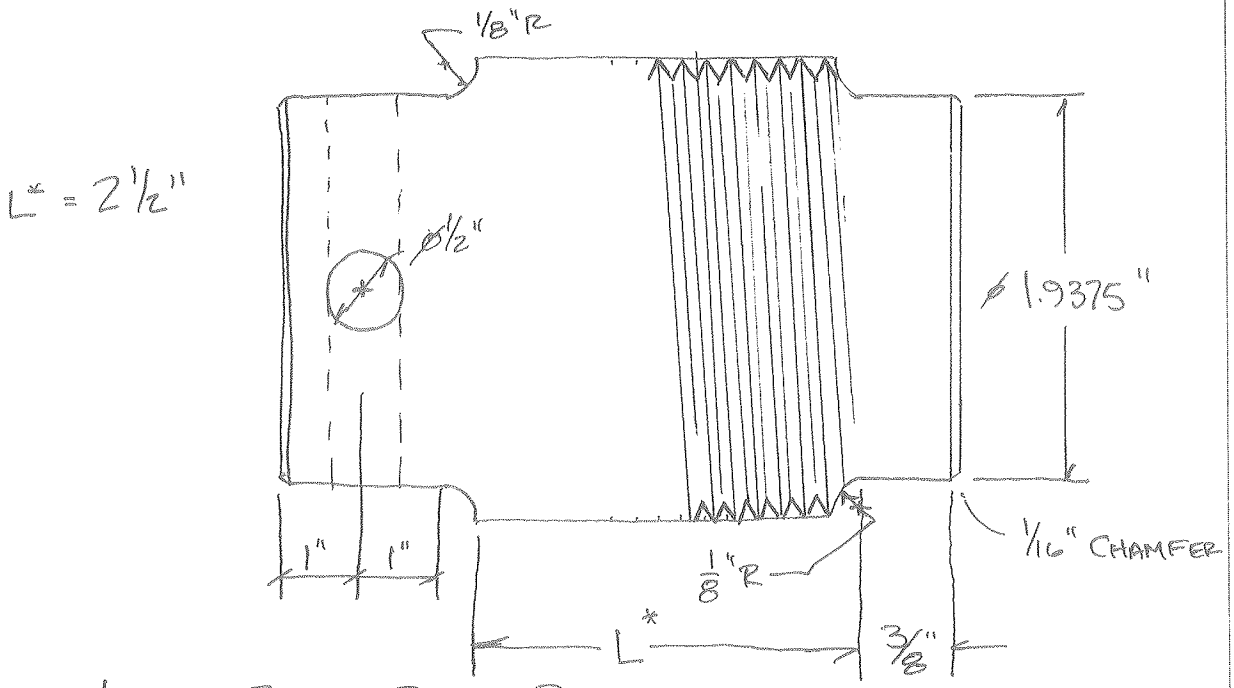

AREA @ THREAD ROOT = 3.56 IN²

$\tau = \frac{7000\#}{3.56\ IN^2} = 1966$ psi $\ll \sigma_{MAX}$ $\therefore$ OK

$\sigma_B = \frac{MY}{I}$ $\quad M = (.375)(7000\#) = 2625$ IN-LBS

$I = \frac{\pi}{64} D^4 = \frac{\pi}{64}(1.9375^4) = .6917\ IN^4$

$Y = 0.968$

$\sigma_B = \frac{(2625)(.968)''}{.6917\ IN^4} = 3676$ psi $< \sigma_{MAX}$ $\therefore$ OK

6-4-02 | DAVE PUSHKAS

MAGNET ENGAGEMENT PINS FOR B2 FIXTURE

W/ A 2¼" ø, 8 SERIES SCREW, LEAD ANGLE = 1°, 3'
PITCH DIA = 2.1688

ASSUME 1) NO FRICTION (CONSERVATIVE)

2) 50 FT-LBS OF TORQUE APPLIED TO SCREW

FIND: FORCED DEVELOPED INTO MAGNET, Q

$$Q = \frac{2\pi T}{p}$$, T = TORQUE APPLIED, 50 FT-LBS

p = LEAD OF THREAD = ⅛"

$$Q = \frac{2\pi \cdot 50 \text{ FT-LBS} \cdot 12''/1 \text{ FT}}{1/8''} = 30{,}160 \#$$

SEE DWG MB-406969 & 406972

B2 FIXTURE - SIDE BARS - PRYING ACTION

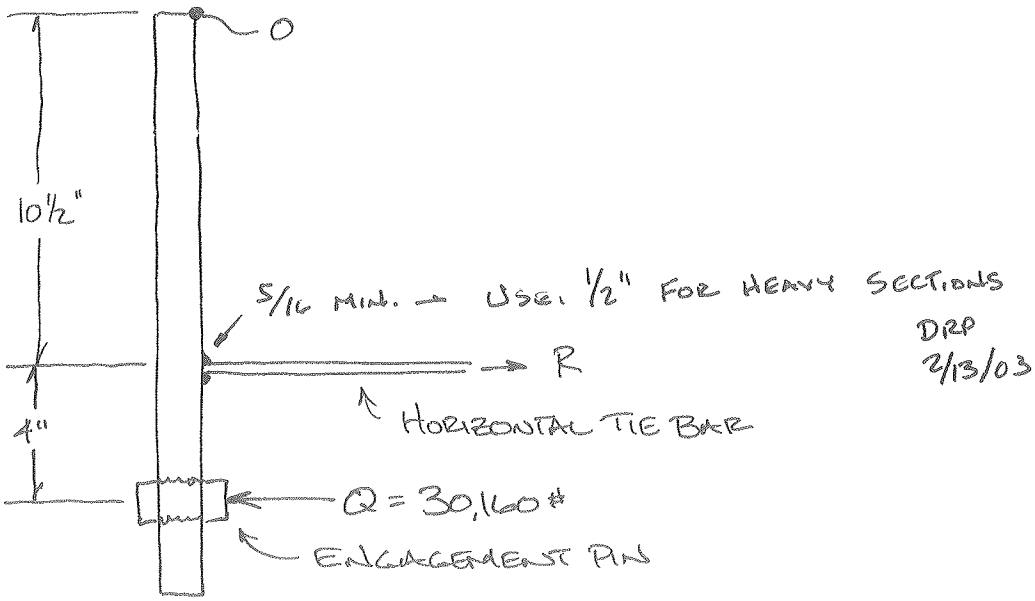

$$\Sigma M_o = 0 = (14\tfrac{1}{2})(30{,}160) - 10\tfrac{1}{2}R$$

$$R = 41{,}650\ \#$$

IF $\sigma_{MAX} = 10{,}000$ PSI $\rightarrow A = 4.17\ in^2$

TRY A PLATE ¾" × 6" ($A = 5.5\ in^2$)

ATTACHED w/ (2) TWO 5/16" FILLETS

$$P_{WELD} = A \times F_v = 0.707 w \times l \times F_v$$

$$= (0.707)(5/16)(6")(2\ \text{SIDES})(.3 \times 70{,}000)$$

$$= 55{,}676\ \# > 41{,}650\ \# \therefore \text{OK}$$

$$M_{MAX} = Pa = (30{,}160)(4") = 120{,}640\ \text{IN-LBS.}$$

6-4-02 | Dave Pushka

B2 Lifting Fixture - Side Vertical Bars

Bending Moment on Bars = 120,640 in-lbs

If σ_{max} = 12 ksi (A36 Material, $\sigma_{allow} = \frac{F_y}{3}$)

$\sigma = \frac{M}{S} \rightarrow S = \frac{M}{\sigma} = \frac{120{,}640}{12{,}000} = 10.05 \text{ in}^3$

$S = \frac{1}{3} b d^2$ Try $d = 2'$, $b = 6''$, $S = 8.0 \text{ in}^3$ · N.G.

Try $d = 2''$, $b = 8''$, $S = 10.667 \text{ in}^3$

∴ OK

Use 2" thk by 8" wide
A36 Steel Side Bars

See Dwg MC-406999 (Weldment)
Dwg MC-406963 (Plate, Side Bar)

B2 LIFTING FIXTURE - MAIN LUG.

ASSUME MILD STEEL, $F_y = 30$ ksi $\therefore \sigma_{MAX} = 10{,}000$ psi

$\tau_{MAX} = 10{,}000$ psi

$P = 28{,}000$ #

$$A_{\substack{TENSILE \\ MIN.}} = \frac{P}{\sigma_{MAX}} = \frac{28{,}000}{10{,}000} = 2.8 \text{ in}^2$$

$$A_{\substack{SHEAR \\ MIN}} = \frac{P}{\tau_{MAX}} = 2.8 \text{ in}^2$$

HOLE SIZE SHOULD BE 1½" ø TO ACCOMODATE A 36,000# SHACKLE. (1¼" SIZE)

LUG THICKNESS SHOULD BE ≐ 1½-2 INCHES WIDE TO ACCOMODATE ABOVE SHACKLE (MOUTH OF SHACKLE IS 2 1/32"

∴ USE 2" THICK MATERIAL, 6" WIDE BAR FOR MAIN LUG -

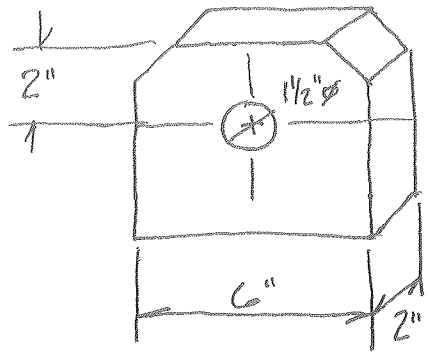

SEE DWG MB-406965

$$A_{TENSION} = (6 * 2) - (2 * 1\tfrac{1}{2}) = 9 \text{ IN}^2 > 2.8 \text{ in}^2 \therefore \text{OK}$$

$$A_{SHEAR} = (2_{\substack{* \\ SIDES}})(2'' \text{ THK})\ 2'' \text{ DEEP} = 8 \text{ in}^2 > 2.8 \text{ in}^2 \therefore \text{OK}$$

B2 LIFTING FIXTURE – END LUGS

ASSUME MILD STEEL, $F_y = 30$ ksi $\therefore$ $\sigma_{MAX} = 10$ ksi

$\tau_{MAX} = 10$ ksi

$$P = \frac{28{,}000}{2} = 14{,}000 \text{ \#}$$

$$A_{TENSILE} = \frac{P}{\sigma_{MAX}} = \frac{14{,}000 \text{ \#}}{10{,}000 \text{ psi}} = 1.4 \text{ in}^2$$

$$A_{SHEAR} = \frac{P}{\tau_{MAX}} = \frac{14{,}000 \text{ \#}}{10{,}000 \text{ psi}} = 1.4 \text{ in}^2$$

HOLE SIZE SHOULD BE 1¼" Ø TO ENGAGE HYDRAULIC CYLINDER CLEVIS.

THICKNESS SHOULD BE 1¼" TO FIT WITHIN THE 1.38" WIDE CYLINDER CLEVIS.

$\therefore$ USE 1¼" THICK MATERIAL, 6" WIDE BAR FOR SIDE LUG.

SIDE LUG

SEE DWG MB-406966

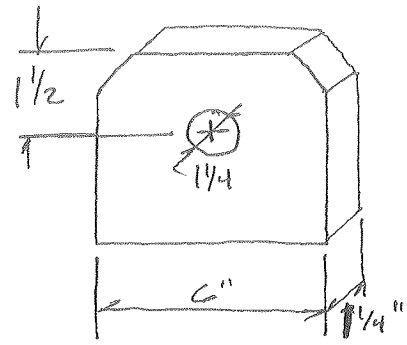

$$A_{TENSION} = (6 \times 1\tfrac{1}{4}) - (1\tfrac{1}{4} \times 1\tfrac{1}{4}) = 5.93 \text{ in}^2 > 1.4 \text{ in}^2 \therefore \text{OK}$$

$$A_{SHEAR} = (2 \text{ SIDES})(1\tfrac{1}{4}\text{" THK})(1\tfrac{1}{2}\text{"}) = 3.75 \text{ in}^2 > 1.4 \text{ in}^2 \therefore \text{OK}$$

Lug Weld Sizing – B2 Lifting Fixture.

Main Lug, P = 28,000 #

End Lug, P = 14,000 #

Assume E70XX, $\frac{5}{16}$" Fillets

$$P = AF_v = (0.707)\frac{5}{16}" \times l \times .3 \times 70{,}000$$

Main Lug, $l_{REQ'D} = 6.03"$

End Lug, $l_{REQ'D} = 3.03"$

Both Lugs are 6" long, so just a single 5/16" fillet @ each side provides ~ twice the needed or req'd capacity. This neglects the additional capacity provided by the lug stiffeners

See Dwg MD-406962

B2 LIFTING FIXTURE – LUG STIFFENING

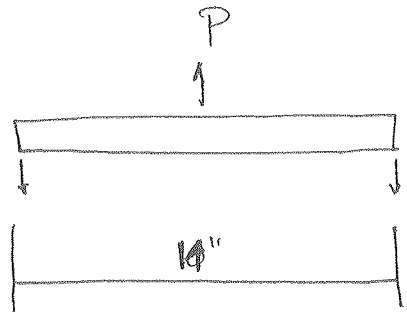

ASSUME MILD STEEL, $\sigma_{ALLOW} \leq 10{,}000$ psi

LIMIT Deflection TO 0.020"

IGNORE CONTRIBUTION FROM BOX SECTION

$$\delta = \frac{Pl^3}{48EI} \rightarrow I = \frac{Pl^3}{48E\delta}$$

$$I_{MIN} = \frac{\frac{1}{2}(28{,}000)(14^3)}{48 * 29 * 10^6 * 0.02} = \cancel{0.503}\ in^4 = 1.38\ in^4$$

TRY A BAR, 3/4" THK * 2" HIGH

$$I = \frac{1}{12} * .75 * 2^3 = 0.50'' \text{ — } \cancel{\text{CLOSE ENOUGH}} \text{ N.G.}$$

$$\sigma = \frac{My}{I} = \frac{Pl}{4} * \frac{1''}{.5} = \frac{\frac{1}{2}28{,}000 * 10}{4 * .5} = 70{,}000 \text{ psi} \quad \therefore \text{N.G.}$$

$$V = \frac{1}{2}\frac{P}{2} = 7000\# \quad \tau = 3500 \text{ psi} \quad \therefore \text{OK}.$$

TRY A BAR 1 1/4 WIDE * 3" HIGH, $I = \frac{1}{12} * 1.25 * 3^3 = 2.8\ in^4$

$$\sigma = \frac{My}{I} \qquad M = \frac{Pl}{4} = \frac{\frac{1}{2}28000 \cdot 14}{4} = 49{,}000 \text{ in-lbs}$$

$$\sigma = \frac{49000}{2.8} \cdot 1.5 = 26{,}250 \text{ psi}$$

B2 FIXTURE - LUG STIFFENER CONT.

TRY BAR $1\frac{1}{4} \times 4'' \rightarrow I = 6.67\ in^4$

$$\sigma = \frac{49000 \cdot 2}{6.67} = 14{,}700\ psi$$ CLOSE ENOUGH.

CHK w/ CONTRIBUTION OF BOX BEAM. RESULT OF 14.700 psi,

THIS NEGLECTS THE CONTRIBUTION FROM THE BOX BEAM:

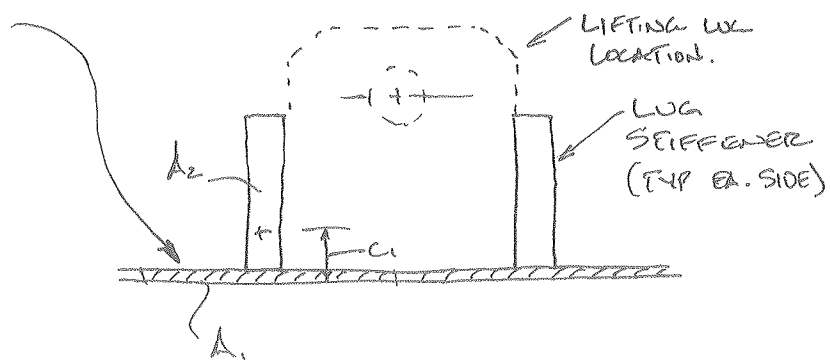

$A_1 = \frac{1}{2} \times 7\frac{1}{4} = 3.625 \quad I_1 = 0.0755 \quad x_1 = .25$

$A_2 = 1\frac{1}{4} \times 4 = 5.00 \quad I_2 = 6.67 \quad x_2 = 2.5$

$A_{TOTAL} = 8.625$

$$I_{COMPOSITE} = \underline{I_1 + d_1^2 \cdot A_1 + I_2 + d_2^2 A_2}$$

$$8.625\, c_1 = A_1 \times x_1 + A_2 x_2 \Rightarrow$$

$$c_1 = \frac{A_1 x_1 + A_2 x_2}{8.625} = 1.55$$

$d_1 = c_1 - x_1 = 1.3'' \quad d_2 = c_1 - x_2 = 1.2''$

$$I_{comp} = 20.07\ in^4 \quad \therefore \sigma_B = \frac{49{,}000}{20.07} 1.55 = 3784\ psi$$

$\therefore$ OK

SEE DWG MD-406962

REV	DESCRIPTION	DRAWN	DATE
		APPROVED	DATE

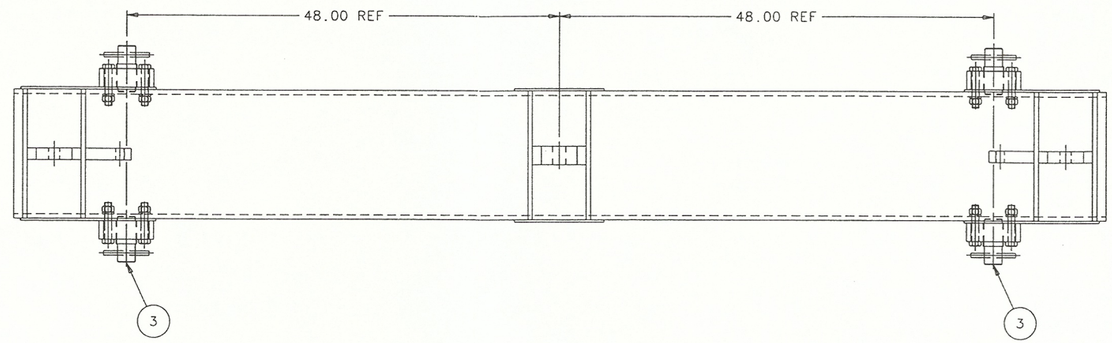

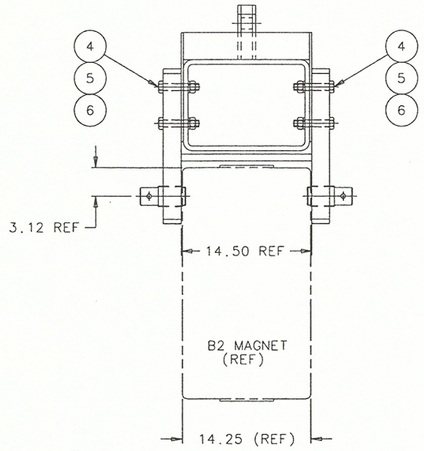

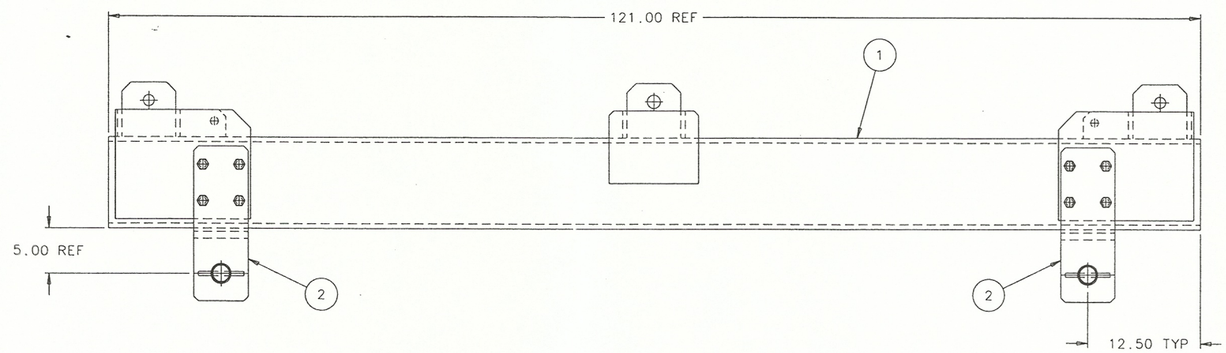

ITEM	PART NO.	DESCRIPTION OR SIZE	QTY.
6	COML	3/4-10 UNC X 4 LG HHCS GD 8	16
5	COML	3/4-10 UNC HEX NUT GRADE 8	16
4	COML	3/4 LOCK WASHER HEAVY DUTY	16
3	MB-406972	ENGAGEMENT PIN WELDMENT	4
2	MC-406999	MOUNTING PLATE SUB ASSEMBLY	2
1	MD-406962	B2 LIFTING FIXTURE WELDMENT	1

PARTS LIST

UNLESS OTHERWISE SPECIFIED			ORIGINATOR	D.PUSHKA	12-JUN-2002
.XX	.XXX	ANGLES	DRAWN	N.GRINNELL	12-JUN-2002
± .02	± - -	± - -	CHECKED	C.NILA	10-OCT-2002
			APPROVED	D.PUSHKA	30-OCT-2002

1. BREAK ALL SHARP EDGES .015 MAX.
2. DO NOT SCALE DRAWING.
3. DIMENSIONS BASED UPON ANSI Y14.5M-1982
4. ALL DIMENSIONS ARE INCHES
5. MAX. ALL MACH. SURFACES

USED ON

MATERIAL
SEE PARTS LIST ABOVE

FERMI NATIONAL ACCELERATOR LABORATORY
UNITED STATES DEPARTMENT OF ENERGY

PPD/MECHANICAL DEPARTMENT
NUMI MAGNET LIFTING FIXTURES
B2 MAG LIFTING FIXTURE ASSEMBLY

SCALE	DRAWING NUMBER	SHEET	REV
1:8	8875.118-MD-406970	1 OF 1	

CREATED WITH : Ideas8m4 GROUP: PPD/MECHANICAL DEPARTMENT

BELOW-THE-HOOK LIFTING DEVICE
Engineering Note Cover Page

Lifting Device Numbers:

FNAL Site No/ _____ Div. Specific No. 136 Asset No. _____

If applicable — If applicable — If applicable

ASME B30.20 Group: (check one)
- [] Group I Structural and Mechanical Lifting Devices
- [] Group II Vacuum Lifting Devices
- [] Group III Magnets, Close Proximity Operated
- [] Group IV Magnets, Remote Operated

Device Name or Description: MI-8 MOD MOUNTING FIXTURE LIFTING BRIDGE

Device was (check all applicable)
- [] Purchased from a Commercial Lifting Device Manufacturer. Mfg Name _____
- [] Designed and Built at Fermilab
- [] Designed by Fermilab and Built by a Vendor. Assy drawing number _____
- [] Provided by a User or other Laboratory
- [] Other: Describe _____

Engineering Note Prepared by: W. BOETTINGER Date: 08/29/02

Engineering Note Reviewed by: A. Stefanik Date: 9/11/02

Lifting Device Data:

Capacity: 840 lbs

Fixture Weight: 35 lbs (est)

Service: [] normal [] heavy [] severe (refer to B30.20 for definitions)

Duty Cycle _____ 8, 16 or 24 hour rating (applicable to groups III, and IV)

Inspections Frequency _____

Rated Load Test by FNAL (if applicable) Date ~~1050~~ 9/13/02 Load 1050 lbs

[] Check if Load Test was by Vendor and attach the certificate

Satisfactory Load Test Witnessed by: WILLIAM P. BOETTINGER

Signature (of Load Test Witness): William P. Boettinger 9/13/02

Notes or Special Information:

THIS LIFTING BRIDGE IS DESIGNED TO MOVE THE REMOTE CLAMP AND A SECTION OF STRIP LINE AT THE MI-8 TEST STAND USING A CRANE.

FERMILAB ENGINEERING NOTE	SECTION	PROJECT	SERIAL-CATEGORY	PAGE
	PPD-MECH	NUMI		1

SUBJECT	NAME	
MI-8 REMOTE CLAMP MOUNT LIFTING BRIDGE DRAWING NUMBER: 8875.111-MD-427038	W. BOETTINGER	
	DATE 8/29/02	REVISION DATE

THIS DESIGN HAS 4 AREAS OF POSSIBLE FAILURE MODE. THE AREAS ARE:

1. BENDING OF CROSS SUPPORT
2. FAILURE OF CROSS SUPPORT - VERTICAL SUPPORT WELDS.
3. FAILURE OF CROSS SUPPORT - MOUNTING BASE WELDS
4. BENDING OF MOUNTING BASE

1 BENDING OF CROSS SUPPORT

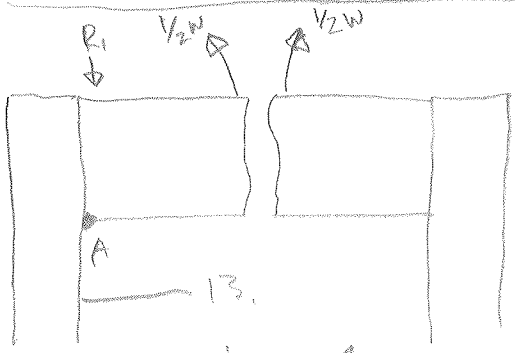

Fig # 1

W = TOTAL OF
1. CLAMP (540# EST)
2. MOUNT (240# EST)
3. LIFTING BRIDGE (35)
4. STRIPLINE (60# EST)

W = 840#

$R_1 = R_2 = 1/2 W = 420\#$

ASSUME BALANCE LIFTING POINT IS AT CENTER OF BRIDGE & THAT LOAD IS EVENLY DISTRIBUTED BY SYMETRY.

$M_A = 1/2\ W\ (13.375/2)$

$M_A = 2809$ in. lbs.

$M_A = M_{MAX}$

USE STRUCTURAL TUBING
A 500 GRADE B
$F_Y = 46$ KSI
$1/3 F_Y = 15{,}333$ PSI

$\sigma = M/S$

$S_{REQ} = \frac{2809 \text{ in. lbs}}{15{,}333 \text{ PSI}}$

$= .183 \text{ in}^3$

TUBING IS 4 x 2 x 1/8" S = 1.438

$.183 << 1.438$

(2) LOOK AT WELD AT ENDS OF CROSS SUPPORT

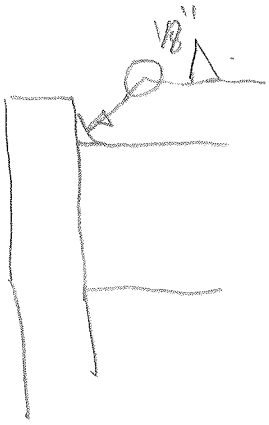

REACTION FORCE $R_1 = 420^{\#}$ IS IN SHEAR ON WELD

ASSUME WELD ON SIDE OF CROSS SUPPORT IS THE ONLY CONNECTION.

WELD AREA $= A_W = 2 \times 4 \times \frac{1}{\sqrt{2}}(.125)$

$= .707 \text{ in}^2$

$\sigma = F/A = R_1/A_W = 420/.707 = 594 \text{ PSI}$

USING E60 MIN. ROD THEN WELD STRESS IS

$60 \text{ KSI}/3 = 20 \text{ KSI} >> .594 \text{ KSI}$ SO WELD IS O.K.

(3) LOOK AT WELD AT VERTICAL SUPPORT - MOUNTING BASE

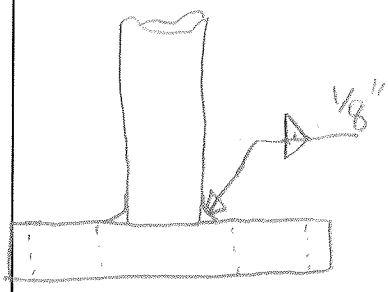

1/8" FILLET WELD ON EACH SIDE OF VERTICAL

$A_W = 1'' \times 2'' \times \frac{.125}{\sqrt{2}}$

$A_W = .707 \text{ in}^2$

$\sigma = \frac{F}{A} = \frac{\text{TENSION IN WELD}}{A} = \frac{420 \text{ lbs}}{.707 \text{ in}^2} = 594 \text{ PSI}$

$.594 \text{ KSI} << 20 \text{ KSI}$ (E-60 ROD)

$\therefore$ WELD IS O.K.

TENSION IN VERTICAL TUBE IS

$\sigma = F/A = 420^{\#}/1.4 \text{ in}^2 = 300 \text{ PSI}$

$.300 \text{ KSI} << 15 \text{ KSI} \Rightarrow$ TUBE IS OK.

(4) LOOK AT BENDING OF MOUNTING PLATE

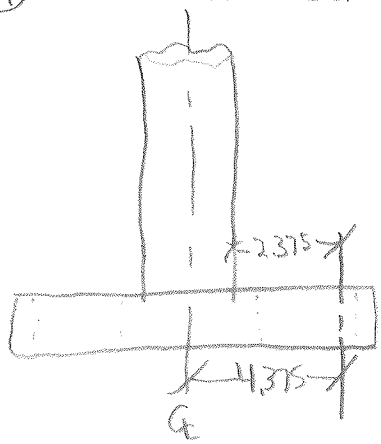

ASSUME ONLY 1 MOUNTING BOLT IS USED IN ITS MOST EXTREME POSITION IN THE LOCATING SLOT. THIS DISTANCE IS: 2.375"

$M_{MAX} = 2.375(420\#)$

$M_{MAX} = 997.5$ lb in.

THIS PROBLEM CAN BEST BE MODELLED BY A FIXED BEAM WITH POINT LOAD AT END:

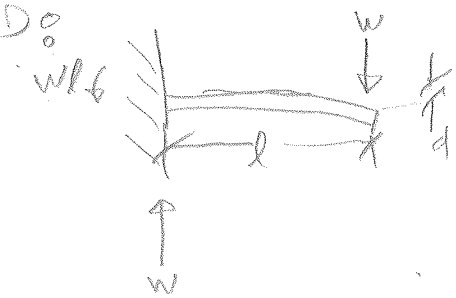

CROSS SECTION IN SLOT AREA LOOKS LIKE
DO 1 SECTION AND DIVIDE BY 2 FOR BOTH!

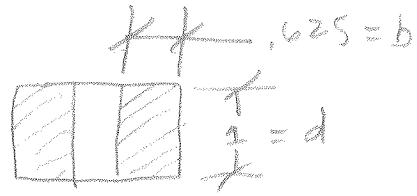

USING CASE 11 PAGE 225 MACH. HANDBOOK 24th ED.

FOR STRESS AT SUPPORT:

$\sigma = \frac{Wl}{Z}$

$Z = I/y = \frac{bd^2}{6}$

$Z = \frac{.625(1)^2}{6}$

$Z = .1042 \text{ in}^3$

MAX DEFLECTION AT TIP:

$d = \frac{Wl^3}{3EI}$

$I = \frac{bd^3}{12}$

$b = .625 \quad d = 1$

$I = \frac{.625(1)^3}{12}$

$I = .0521$

$\sigma = \frac{Wl}{Z} = \frac{420(2.375)}{.1042}$

$\sigma = 9573$ PSI

$d = \frac{Wl^3}{3EI}$ $E = 30 \times 10^6$

$d = \frac{(420)(2.375)^3}{3(30\times10^6)(.0521)}$

$d = 1.199 \times 10^{-3}$ INCH

— NOTE THE NUMBERS (σ + d) ARE FOR 1 SIDE OF SLOT BOTH NUMBERS ARE REDUCED BY ½ BECAUSE THERE ARE 2 SIDES.

$\sigma_{CORR} = 4787$ PSI << 15KSI $d_{CORR} = 6 \times 10^{-4} = .0006''$

∴ MOUNTING PLATE - IS OK.

BOLT

BOLT DIAMETER IS 5/8"
STRESS AREA IS .226 IN².

ASSUME ONLY 1 BOLT IS USED TO ATTACH LIFTING BRIDGE TO FRAMEWORK.

LOAD: 840#

$\sigma = F/A = 840/.226 \text{ in}^2 = 3717$ psi

ASSUMING A GRADE 2 BOLT IS USED σ = 57KSI YIELD
3.7 KSI << 57 KSI