BELOW-THE-HOOK LIFTING DEVICE
Engineering Note Cover Page

Lifting Device Numbers:

FNAL Site No.:_____ if applicable Div. Specific No.: 129 if applicable Asset No. _____ if applicable

ASME B30.20 Group: (check one)
- ˇ Group I Structural and Mechanical Lifting Devices
- ˇ Group II Vacuum Lifting Devices
- ˇ Group III Magnets, Close Proximity Operated
- ˇ Group IV Magnets, Remote Operated

Device Name or Description: MINOS BUNDLE & SCINTILLATOR BOX SPREADER BAR.

Device was: (check all applicable)
- ˇ Purchased from a Commercial Lifting Device Manufacturer
  mfg. name: _____
- ˇ Designed and Built at Fermilab
- ˇ Designed by Fermilab and Built by a Vendor
  Assy drawing number: 9215300-ME-397426
- ˇ Provided by a User or Other Laboratory
- ˇ Other. Describe: _____

Engineering Note Prepared by: JAMES KILMER Date: _____

Engineering Note Reviewed by: _____ Date: _____

Lifting Device Data:

Capacity: 12500 lb AT 133 in , 5000 lb AT 253"

Fixture Weight: 1090 lbs

Service: ˇ normal ˇ heavy ˇ severe (refer to B30.20 for definitions)

Duty Cycle: _____ 8, 16 or 24 hour rating (applicable to groups III, and IV)

Inspections Frequency: _____

Rated Load Test by FNAL (if applicable): Date: _____ Load: _____

ˇ Check if Load Test was by Vendor and attach the certificate.

Satisfactory Load Test Witnessed by: _____

Signature (of Load Test Witness): _____

Notes or Special Information:

THIS FIXTURE IS BEING BUILT IN A LOCAL SHOP AT SOUDAN, MN. FOR MINOS. THE SOUDAN LAB STAFF IS RESPONSIBLE FOR GETTING LOAD TESTS COMPLETED ON THE FIXTURES AFTER THEY ARE MADE.

FERMILAB ENGINEERING NOTE	SECTION	PROJECT	SERIAL-CATEGORY	PAGE
				1

SUBJECT	NAME	
	DATE	REVISION DATE

LIFTING POINT DISTANCE ON SCINT. BOXES. 253in AND 247in

LIFTING POINT DISTANCE ON STEEL PLATES 133.5in AND 125.5in ←

SCINT. BOX LOAD = 5000 lbs STEEL BUNDLE LOAD 12,500 lbs

FIRST CALCULATE A SHORT MAIN BEAM FOR THE STEEL PLATES. THEN LOOK FOR AN EXTENSION TO CARRY THE LIGHTER, BUT LONGER SCINTILLATOR BOXES.

CALCULATE THE MOMENT AND S_{REQ} FOR THE SHORT PART OF THE BAR

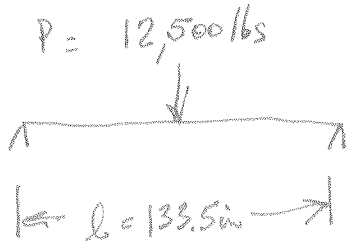

$$M = \frac{Pl}{4} = \frac{(12{,}500\,lb.)(133.5\,in)}{4}$$

$$= 417{,}187\ lb\text{-}in$$

FOR A-36 STEEL $F_y = 36$ KSI

$$F_{ALLOWABLE} = \frac{F_y}{3} = \frac{36\,KSI}{3} = 12\,KSI$$

$$S_{REQ} = \frac{M}{F_A} = \frac{417{,}187\,lb\text{-}in}{12{,}000\,PSI} = 34.786\ in^3$$

POSSIBLE CHOICE IS TWO C10X20 CHANNELS ($S = 15.8\ in^3$ EACH) WITH 1/2" CAP PLATES TOP & BOTTOM.

FERMILAB
ENGINEERING NOTE

SECTION	PROJECT	SERIAL-CATEGORY	PAGE
			2

SUBJECT	NAME	
	DATE	REVISION DATE

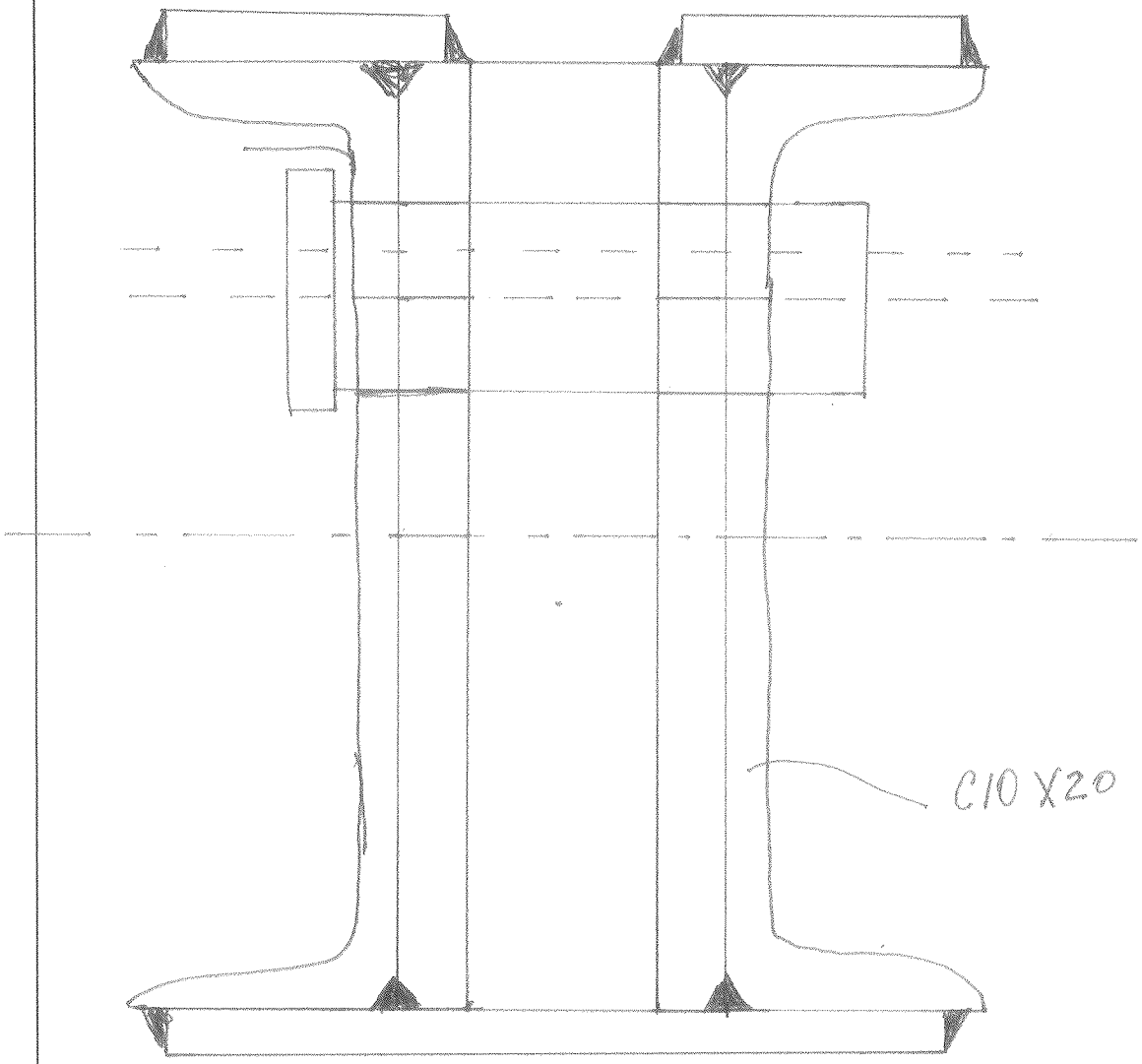

CALCULATE I_{xx} FOR THE BEAM AT CENTER (MAX MOMENT POINT)

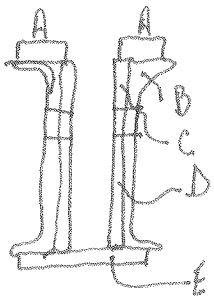

SECT	BASE	HEIGHT	$I\ in^4$	AREA	y	$I + Ar^2$	TOTAL I_{xx}
A	3"	.5in	$.031 in^4$	$1.5 in^2$	5.25in	$.031 in^4 + 1.5 in^2 \times (5.25 in)^2$	$2 \times 41.375 in^4$
B	C10X20			$5.88 in^2$			$2 \times 72.317 in^4$
C	.75in	1.5in	$.211 in^4$	$1.125 in^2$	4.25in	$.211 in^4 + 1.125 \times 4.25^2$	$2 \times 20.531 in^4$
D	.75in	6.5in	$17.164 in^4$	$4.875 in^2$	1.75in	$17.164 in^4 + 4.875 \times 1.75^2$	$2 \times 32.094 in^4$
E	8.25in	.5in	$.086 in^4$	$4.125 in^2$	5.25in	$.086 in^4 + 4.125 \times 5.25^2$	$113.781 in^4$

$A_T = 30.885 in^2$

TOTAL $I_{xx} = 446.415 in^4$

C10X20 $\Rightarrow I = 78.9 in^4 - I_{HOLE}$

$I_{HOLE} = \frac{1}{12} b h^3 = \frac{1}{12}(.5in)(2in)^3 + Ar^2$

$= .333 in^4 + (.5in \times 2in) \times (2.5in)^2$

$= 6.58 in^4$

C10X20 w/ HOLE $I = 78.9 in^4 - 6.58 in^4$

$= 72.317 in^4$

$S = \frac{I_{xx}}{r} = \frac{I_{xx}}{\sqrt{\frac{I_{xx}}{A}}}$

$S = \frac{446.415 in^4}{\sqrt{\frac{446.415 in^4}{30.885 in^2}}}$

$= 117.42$

$117.42 > S_{REQ} = 34.7$

$\therefore$ BEAM DESIGN IS OK.

CHECK I_{xx} AT OTHER SPOTS ON THE BEAM

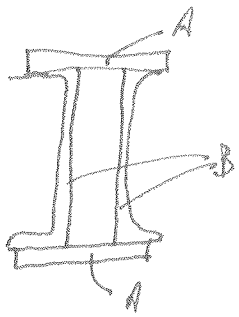

SECT	BASE	HEIGHT	$I\ in^4$	AREA	r	$I + Ar^2$	TOTAL I_{xx}
A	8.25in	.5in	$.086 in^4$	$4.125 in^2$	5.25in	$2[.086 in^4 + 4.125 in^2 \times (5.25 in)^2]$	$227.56 in^4$
B	C 10 X 20		$78.9 in^4$	$5.88 in^2$	0	0	157.8

TOTAL I_{xx} = 385.36

$$S = \frac{I_{xx}}{r} = \frac{I_{xx}}{\sqrt{\frac{I_{xx}}{A}}}$$

$$= \frac{385.36\ in^4}{\sqrt{\frac{385.36\ in^4}{2(4.125 in^2 + 5.88 in^2)}}}$$

$$= 87.8\ in^3$$

$87.8\ in^3 > S_{REQ} = 34.7 \Rightarrow$ BEAM DESIGN IS OK FOR STEEL LOAD

LOOK AT PICK PIN 2" DIAMETER

BENDING IN THE PIN

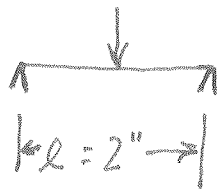

$P = 12{,}500\,lb$ + wt OF FIXTURE ESTIMATE.
$= 12{,}500\,lb + 1000\,lb$
$= 13{,}500\,lbs$

$$M = \frac{Pl}{4} = \frac{13{,}500\,lbs \times 2\,in}{4}$$

$$= 6750\,lb\,in$$

$$I = \frac{\pi d^4}{64} = \frac{\pi (2\,in)^4}{64} = .785\,in^4$$

$$\sigma = \frac{Mc}{I} = \frac{(6750\,lb\,in)(1\,in)}{.785\,in^4}$$

$$= 8594\,PSI$$

CAN USE ~~1020~~ 1018 COLD FINISHED ROUND STOCK (RYERSON STOCK CATALOGUE)

$F_y = 54{,}000\,PSI$ $\quad \frac{F_y}{3} = \frac{54{,}000}{3} = 18{,}000\,PSI$

$8594\,PSI < 18{,}000\,PSI$ $\therefore$ 1018 PIN 2" DIA IS OK.

SHEAR

$$\sigma = \frac{F}{A} = \frac{13{,}500\,lbs}{\frac{\pi}{4}(2")^2} = 4297\,PSI$$ $\Rightarrow$ SHEAR IS OK FOR THE PIN.

NEXT CONSIDER TEAROUT OF PIN

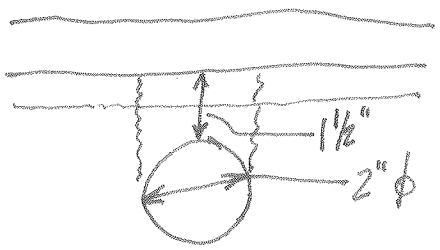

DO NOT CONSIDER THE TOP CAP PLATE AS IT IS A POOR MEMBER FOR SUPPORT

FORCE = 13,500 lbs (LOAD + FIXTURE)

AREA = 2 SIDES × 2 PIN SIDES × (1½" + 1") × (¾" + ⅜")

= 11.25 in²

$$\sigma_{SHEAR} = \frac{F}{A} = \frac{13{,}500 \text{ lbs}}{11.25 \text{ in}^2}$$

= 1200 PSI IN SHEAR

⇒ OK FOR A LIFTING FIXTURE.

($\frac{F_y}{3}$ FOR A 36 = 12,000 PSI!)

CHECK HOOK ATTACHMENT FOR STRESS

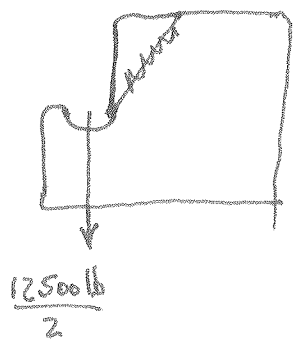

AREA FOR SHEAR IS $4'' \times 1'' = 4 in^2$

$P = 6250 lbs$

$$\sigma_{SHEAR} = \frac{P}{A} = \frac{6250 lbs}{4 in^2}$$

$$= 1562 \text{ PSI.}$$

$\Rightarrow$ CAN USE ANY REASONABLE STEEL WITH $F_y \geq 30{,}000$ PSI

CHOOSE 1020 HOT ROLLED 1" PLATE

CALCULATE BENDING

EXTENDED DISTANCE $= \frac{133.5'' - 125.5''}{2} = 4 in$

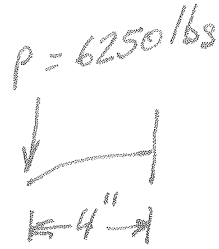

$$M = P\ell = 6250 lbs \times 4 in$$

$$= 25{,}000 \text{ lb in}$$

BEAM $I = \frac{1}{12} b h^3$

$$= \frac{1'' \times 10 in^3}{12}$$

$$= 83.3 in^4$$

$$\sigma_{BEND} = \frac{Mc}{I} = \frac{(25{,}000 \text{ lb in})(5 in)}{83.3 in^4}$$

$$= 1500 \text{ PSI}$$

$\Rightarrow$ BENDING STRESS OK FOR 1020 HOT ROLLED PLATE.

THE HOOK PART BOLTS INTO THE BEAM TO ALLOW ADJUSTMENT FROM 125.5in SPAN TO 133.5" SPAN. FOR THIS WE USE AISC SECTION "ECCENTRIC LOADS ON FASTENER GROUPS", SPECIFICALLY TABLE XII pg 4-63

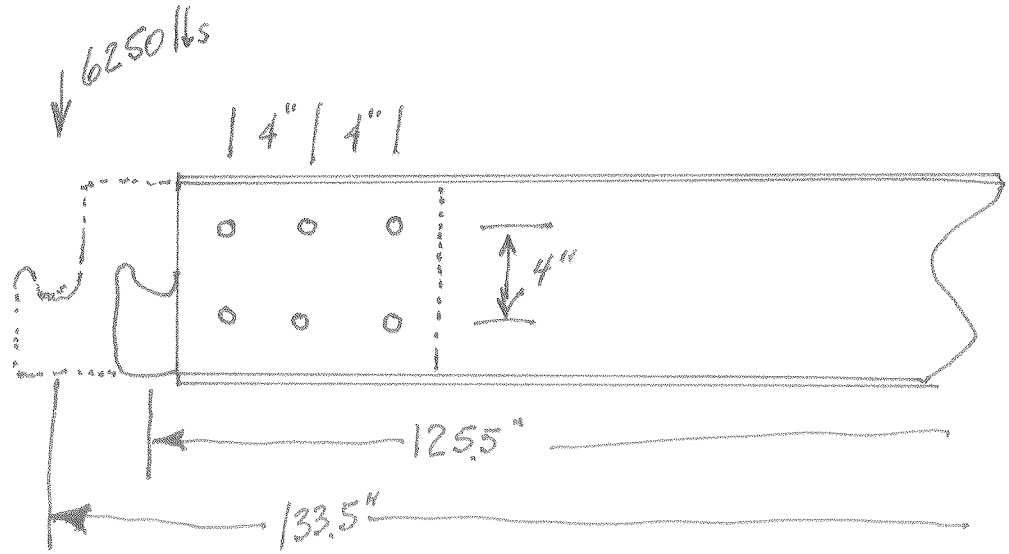

FOR THIS ASSUME THAT CAP PLATES TOP AND BOTTOM PROVIDE THE HOOK PART WITH NO SUPPORT. ALL IS CARRIED BY 4 BOLTS IN A SQUARE PATTERN.

FROM pg 4-63 $P = 6250$ lbs, $m = 2$ $\ell \sim 10$in

FROM TABLE XII THEN $C =$ ~~2.54~~ .79

NOTE THAT THIS TABLE IS FOR BOLT SPACING 3X3 AND WE NEED 4"X4". ALSO NOTE THAT FOR THE NEXT TABLE AT SPACING 3X5½" THE $C = 2.75$. THE FUNCTION IS NON LINEAR BUT IT IS CONSERVATIVE TO USE THE FACTOR FOR THE SMALLER SPACING. NOW FIND BOLT SIZE

$$r_u = \frac{P}{C} = \frac{6250 \text{ lbs}}{\cancel{2.54}\ .79} = \cancel{2460}\ \text{lb} \quad 7911 \text{ lb}$$ MINIMUM ALLOWABLE LOAD ON A BOLT.

FROM TABLE 1-D pg 4-5 FIND SUITABLE BOLTS

CONNECTION IS BEARING TYPE WITH THREADS EXCLUDED
CHOOSE A ¾" A325 BOLT THEN THE ALLOWABLE LOAD ON BOLT IS 13.3 KIP

7911
~~2460~~ lb < 13,300 lbs so 4 BOLTS 3/4" A325 ARE OK.

ALSO NOTE THAT THE CONNECTION CAN NOT BE SLIP CRITICAL DESIGN.
THE CAP PLATES RESTRICT THE TWO CHANNELS FROM BEING PULLED TOGETHER TO FORM A FRICTION CONNECTION, WITH THE HOOK PART.

TO LIFT SCINTILLATOR BOXES AN EXTENSION IS TO BE ADDED TO EACH END. THE EXTENSIONS NEED TO BE THIS LONG:

$$\frac{253\,in - 120\,in}{2} = 66.5\,in \quad \text{LONG}$$

BECAUSE THE CENTRAL BEAM IS RATED FOR SUCH A LARGE LOAD AND THE EXTENSIONS ARE HELD ON BY 6 BOLTS AT EACH CONNECTION CALL THE EXTENSION A CANTILEVER BEAM WITH A FIXED END.

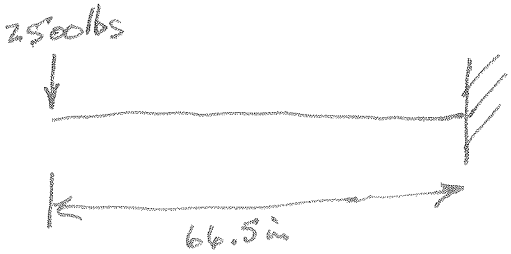

$$M_{MAX} = PL$$
$$= (2500\,lbs)(73.625\,in)$$
$$= 184{,}062$$

(FIND MOMENT TO THE CENTROID OF THE BOLT CONNECTION!)

USE A-36 STEEL AND FIND S_{REQ}

$$S_{REQ} = \frac{M_{MAX}}{12{,}000\,PSI} = \frac{184062\,lb\,in}{12{,}000\,PSI}$$
$$= 15.339\,in^3$$

$\Rightarrow$ CAN USE 2 C8 X 11.5 CHANNELS S FOR ONE CHANNEL = 8.14 in

ALSO NOTE THAT THE MOMENT DIAGRAM LOOKS LIKE THIS:

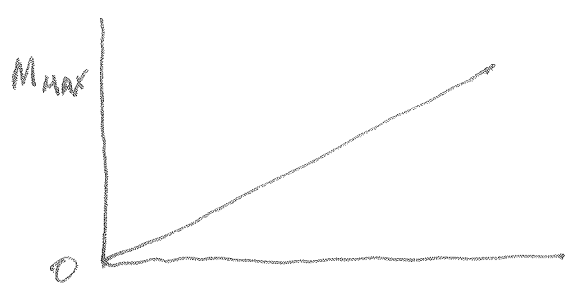

WE CAN USE THIS FACT TO LIGHTEN THE LOAD BY REDUCING THE DEPTH OF THE BEAM.

AT THE CONNECTION END

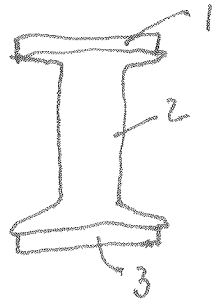

SECT.	BASE	HEIGHT	$I(in^4)$	AREA	r	$I + Ar^2$	TOTAL I_{XX}
1	5.5"	.5	$.057 in^4$	$2.75 in^2$	4.25 in	$.057 + 2.75 \times 4.25^2$ 49.7	$49.7 in^4$
2	C 8	x 11.5	$32.6 in^4$				$2 \times 32.6 in^4$
3	5.5	.5	$.057 in^4$	$2.75 in^2$	4.25 in	$.057 + 2.75 \times 4.25^2$	$49.7 in^4$

TOTAL I_{XX} = $164.6 in^4$

$$I_{1,3} = \frac{1}{12} bh = \frac{1}{12}(5.5 in)(.5 in)^3 = .057 in^4$$

$$S = \frac{I}{c} = \frac{164.6 in^4}{4.5 in} = 36.6 in^3$$

NOW THE OPPOSITE END

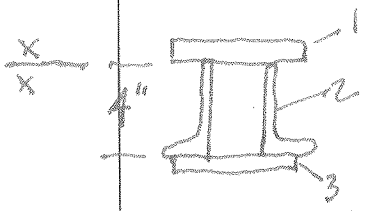

SECT	BASE	HEIGHT	$I(in^4)$	AREA	r	$I + Ar^2$	TOTAL I_{XX}
1	5.5	.5	.057"	$2.75 in^2$	.25	$.057 in^4 + 2.75 in^2 \times .25 in^2$	$.229 in^4$
2	C8X	11.5/2	$16.3 in^4$				$2 \times 16.3 in^4$
3	5.5	.5	$.057 in^4$	$2.75 in^2$	4.25 in	$.057 + 2.75 \times 4.25^2$	$49.7 in^4$

I_{XX} = $82.5 in^4$

$$S = \frac{I}{c} = \frac{82.5 in^4}{2.5 in} = 33.0 in^3$$

REQUIRED VS. ACTUAL S_{xx} FOR EXTENSIONS

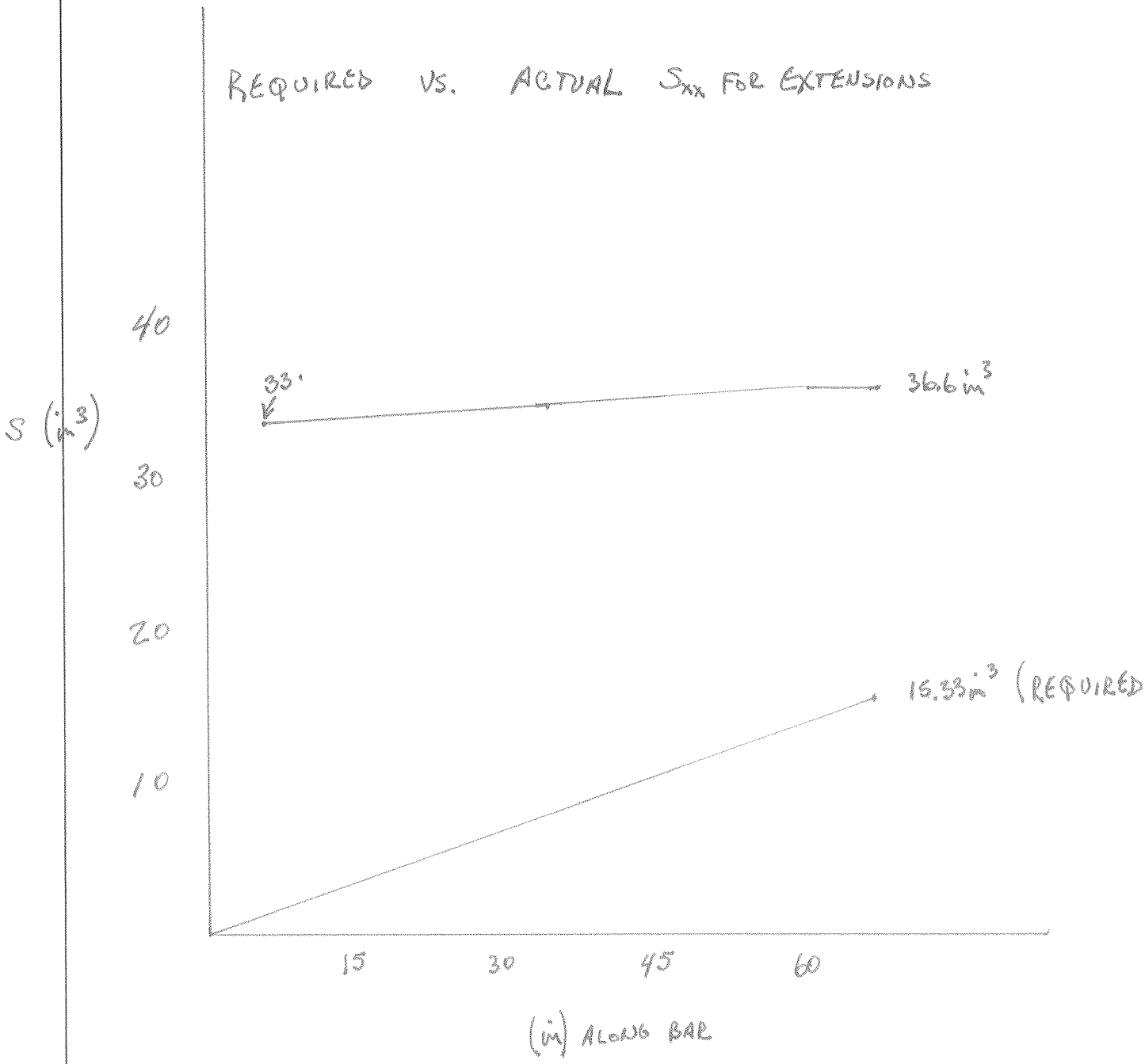

GRAPH OF S_{REQ} VS ~~S~~ S PROVIDED

NOW LOOK AT BOLTED CONNECTION

AGAIN USE AISC CODE pg 4-57 "ECCENTRIC LOADS ON FASTENER GROUPS" NOTE THAT THE CODE TABLES ONLY GO TO A MAXIMUM ECCENTRICITY OF 36" AND SPACES BOLT ARRAYS AT 3" OR 6" CENTERS ONLY. WE CALCULATE THE MAXIMUM MOMENT ALLOWED BY THE CODE AT 36" AND COMPARE THAT WITH OUR NEEDED MOMENT OF 184,062 lb-in. ALSO OUR SPACING FOR BOLT ARRAYS IS 4". INSPECTION OF THE TABLES SHOWS THAT THE C FACTOR IS LARGER WITH THE GREATER SPACING BUT IS NON-LINEAR. THEREFORE USING THE SPACING OF 3" WITH THE SMALLEST C FACTOR IS CONSERVATIVE. WE ASSUME ALL MOMENT IS RESISTED BY THE BOLT ARRAY AND NONE IS RESISTED BY THE TOP AND BOTTOM CAP PLATES.

FROM pg 4-66 TABLE XV

$n = 2$ $\quad \ell = 36 \quad b = 3'' \quad \Rightarrow C = .43$

FROM TABLE 1-D pg 4-5 FOR 3/4" A325 BOLTS THE ALLOWABLE LOAD IS 13.3 kip

$r_v = 13.3\,\text{kip} \Rightarrow \quad P = r_v \times C = 13.3\,\text{kip} \times .43$

$= 5.719\,\text{kip}$ MAXIMUM ALLOWABLE JOINT LOAD

$\therefore$ MAXIMUM ALLOWABLE MOMENT ON THE JOINT IS $5.719\,\text{kip} \times 36''$
$= 205{,}880\,\text{lb in}$

$184{,}000\,\text{lb in}_{\text{REQUIRED}} < 205{,}880\,\text{lb in}$ ALLOWED

$\Rightarrow$ SO THIS JOINT CAN TAKE MOMENT AND IS OK

LOOK AT TEAROUT OF THE PIN SUPPORTING A BOX

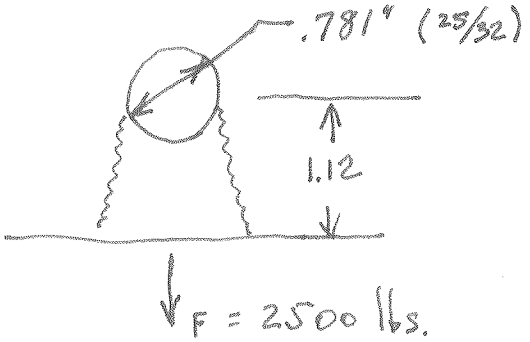

WEB THICKNESS = .22 in

SHEAR AREA = 2 X 1.12 in X .22 in

= .49 in²

$$\sigma = \frac{F}{A} = \frac{2500\ \text{lbs}}{.49\ \text{in}^2}$$

$$= 5073\ \text{PSI}$$

⇒ TEAROUT IS OK FOR A-36 STEEL CHANNEL ($F_y/3$ = 12,000 PSI)

BENDING IN PIN (SIMPLE BEAM CONCENTRATED LOAD)

$$M = \frac{P\ell}{4} = \frac{(2500\ \text{lb})(1\ \text{in})}{4} = 625\ \text{lb in}$$

P = 2500 lb
ℓ = 1"

PIN = 3/4" DIAMETER

$$S = \frac{\pi d^3}{32} = \frac{\pi (.75\ \text{in})^3}{32} = .041\ \text{in}^3$$

$$\sigma = \frac{M}{S} = \frac{625\ \text{lb-in}}{.041\ \text{in}^3}$$

$$= 15090\ \text{PSI}$$

USE 1018 COLD FINISHED ROUND STOCK

F_y = 54,000 PSI $F_y/3$ = 18,000 PSI

15,090 PSI < 18,000 PSI ⇒ PIN IS OK FOR LOAD.

REV.	DESCRIPTION	DRAWN	DATE
		APPROVED	DATE

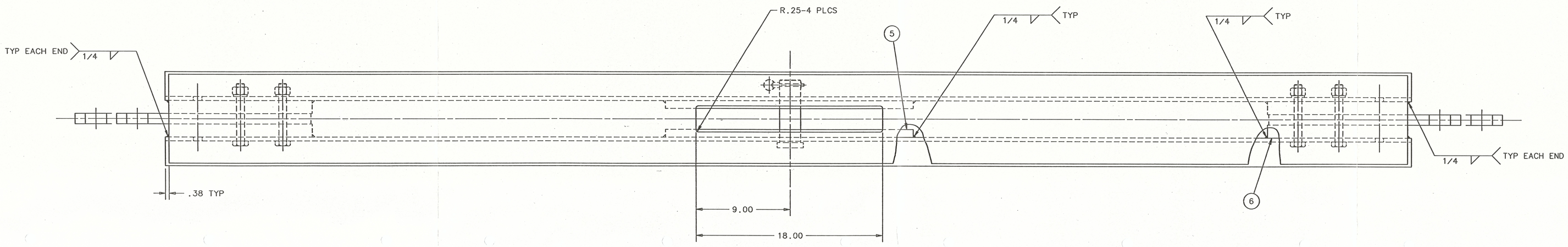

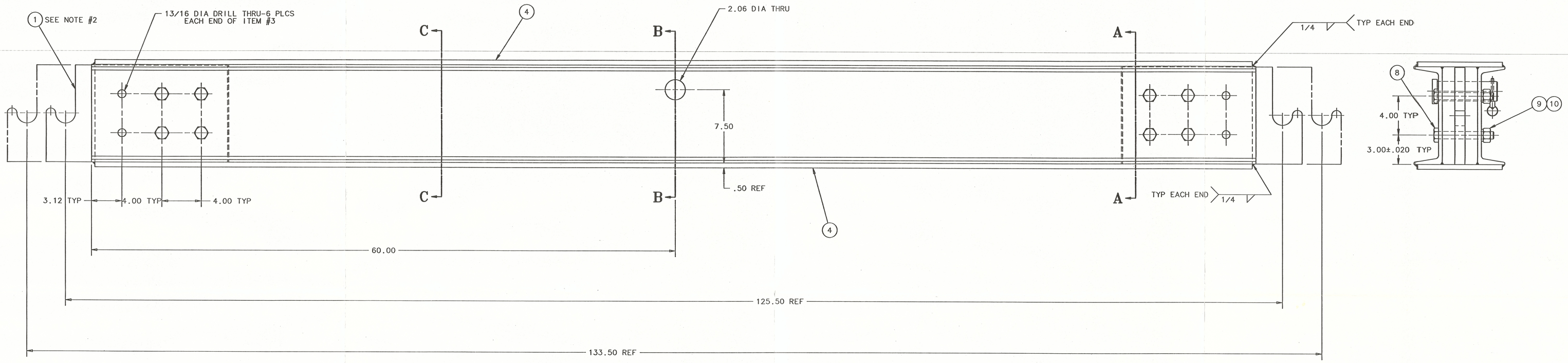

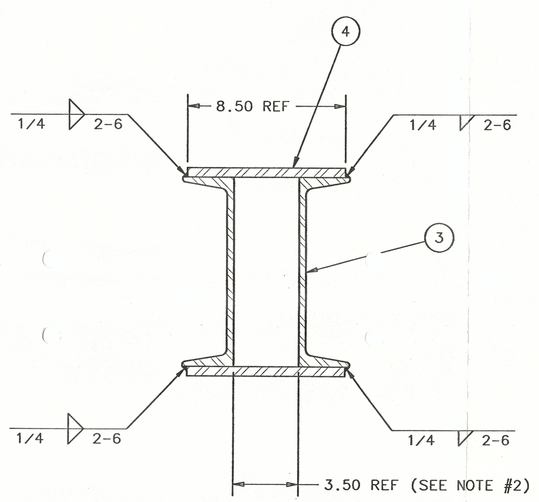

SECTION C–C

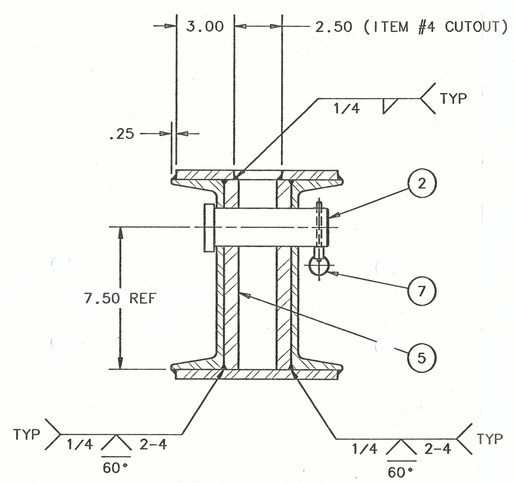

SECTION B–B

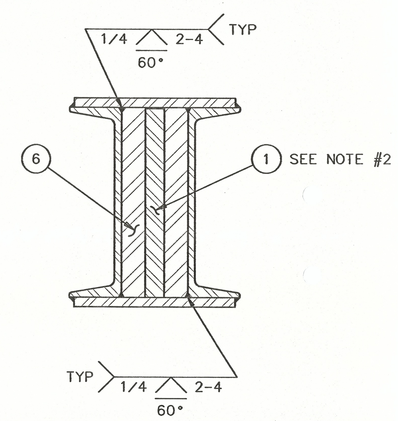

SECTION A–A

NOTES: 1-ALL WELDING ROD TO BE E70XX.
2-ITEM #1 TO BE ASSURED OF A SLIP FIT ADJUSTMENT PRIOR TO WELDING ITEMS #3 TO #4.
3-FIXTURE WEIGHT APPROX. 1090 POuNDS.

ITEM NO.	PART NO.	DESCRIPTION OR SIZE	QTY. REQ.
10	COML	3/4 HIGH STRENGTH SPLIT SPRING LOCKWASHER	8
9	COML	3/4-10 UNC-2B ASTM A325 FULL HEX NUT	8
8	COML	3/4-10 UNC-2A x 5 1/2 LG ASTM A325 HEX HEAD CAP SCREW	8
7	COML	QUICK RELEASE BALL LOCK PIN REID TOOL #BLRS-030 OR EQUIV.	1
6	COML	1.25 x 10.00 x 13.62 A36 H.R.S.	4
5	COML	.75 x 10.00 x 24.00 A36 H.R.S.	2
4	COML	.50 x 8.50 x 119.25 A36 H.R.S.	2
3	COML	C10 x 20 x 120.00 A36 STD CHANNEL	2
2	MB-397428	CLEVIS PIN	1
1	MC-397427	LIFTING PLATE	2

PARTS LIST

UNLESS OTHERWISE SPECIFIED			ORIGINATOR	J.KILMER	
.XX	.XXX	ANGLES	DRAWN	D.TOUSIGNANT	2-23-01
± .03	±	±	CHECKED	Reeder	2.27.01
			APPROVED	James R. Elmes	2/28/01
			USED ON		
			MATERIAL	SEE B.O.M.	

1. BREAK ALL SHARP EDGES .015 MAX.
2. DO NOT SCALE DRWG.
3. DIMENSIONING IN ACCORD WITH ANSI Y14.5M-1982 STD.
4. ALL DIMENSIONS ARE IN INCHES.

125 MAX. ALL MACHINED SURFACES

MAR 2001 REFERENCE ONLY Not For Fabrication

FERMI NATIONAL ACCELERATOR LABORATORY
UNITED STATES DEPARTMENT OF ENERGY

PPD/MECHANICAL SUPPORT
MINOS STEEL PLATE
SPREADER BAR ASSEMBLY

SCALE	DRAWING NUMBER	SHEET NO.	REV.
1/4	9215.300-ME-397426	1 OF 1	

REV.	DESCRIPTION	DRAWN	DATE
		APPROVED	DATE

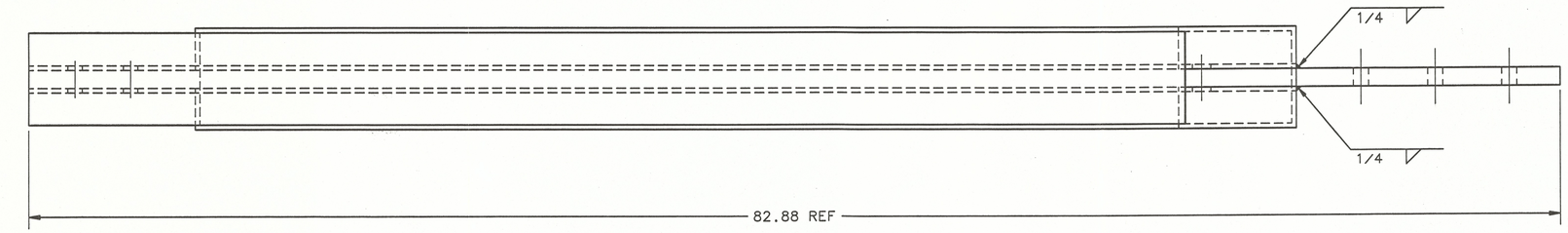

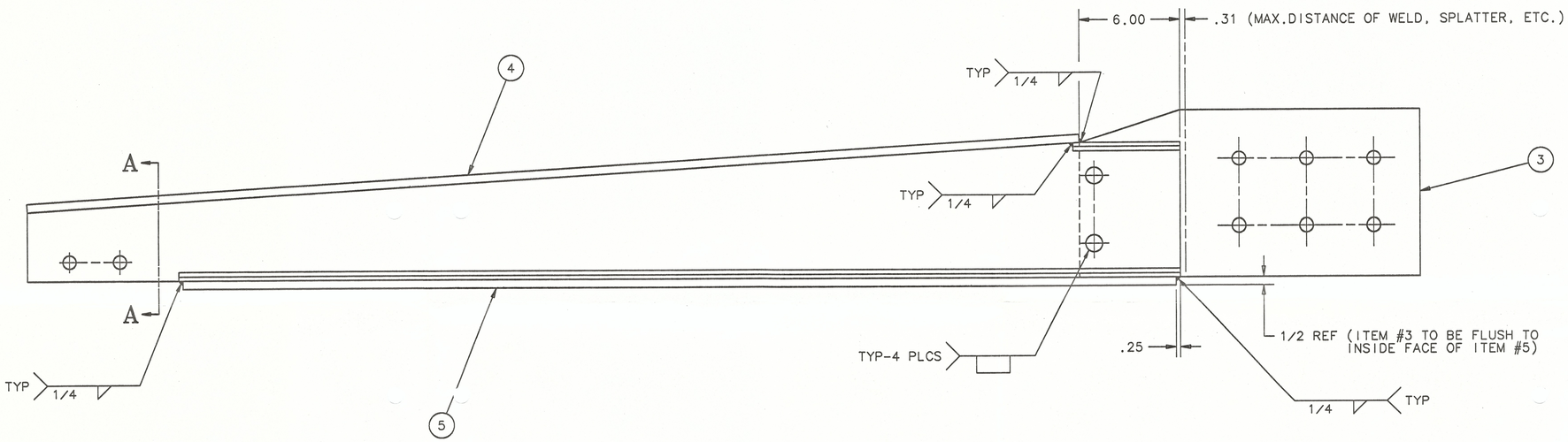

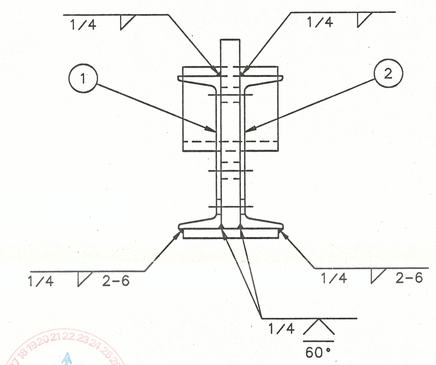

MAR 2001
REFERENCE ONLY
Not For Fabrication

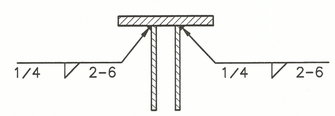

SECTION A-A

NOTES: 1.ALL WELDING ROD TO BE E70XX.
2.FIXTURE WEIGHT APPROX. 226 POUNDS.

ITEM NO.	PART NO.	DESCRIPTION OR SIZE	QTY. REQ.
5	COML	1/2 x 5 x 59.12 A36 H.R.S.	1
4	COML	1/2 x 5 x 62.75 A36 H.R.S.	1
3	MC-397454	MOUNTING PLATE	1
2	MD-397453-2	CHANNEL	1
1	MD-397453-1	CHANNEL	1

PARTS LIST

UNLESS OTHERWISE SPECIFIED					
.XX	.XXX	ANGLES	ORIGINATOR	J.KILMER	
± .06	±	±	DRAWN	D.TOUSIGNANT	3/12/01
			CHECKED		3-21-01
			APPROVED		3/21/01

1. BREAK ALL SHARP EDGES .015 MAX.
2. DO NOT SCALE DRWG.
3. DIMENSIONING IN ACCORD WITH ANSI Y14.5M-1982 STD'S.
4. ALL DIMENSIONS ARE IN INCHES.

125 MAX. ALL MACHINED SURFACES

USED ON: ME-397426

MATERIAL: SEE B.O.M.

FERMI NATIONAL ACCELERATOR LABORATORY
UNITED STATES DEPARTMENT OF ENERGY

PPD/MECHANICAL SUPPORT
MINOS STEEL PLATE
SPREADER BAR EXTENTION WELDMENT

SCALE	DRAWING NUMBER	SHEET NO.	REV.
1/4	9215.300-MD-397452	1 OF 1	

REV.	DESCRIPTION	DRAWN	DATE
		APPROVED	DATE

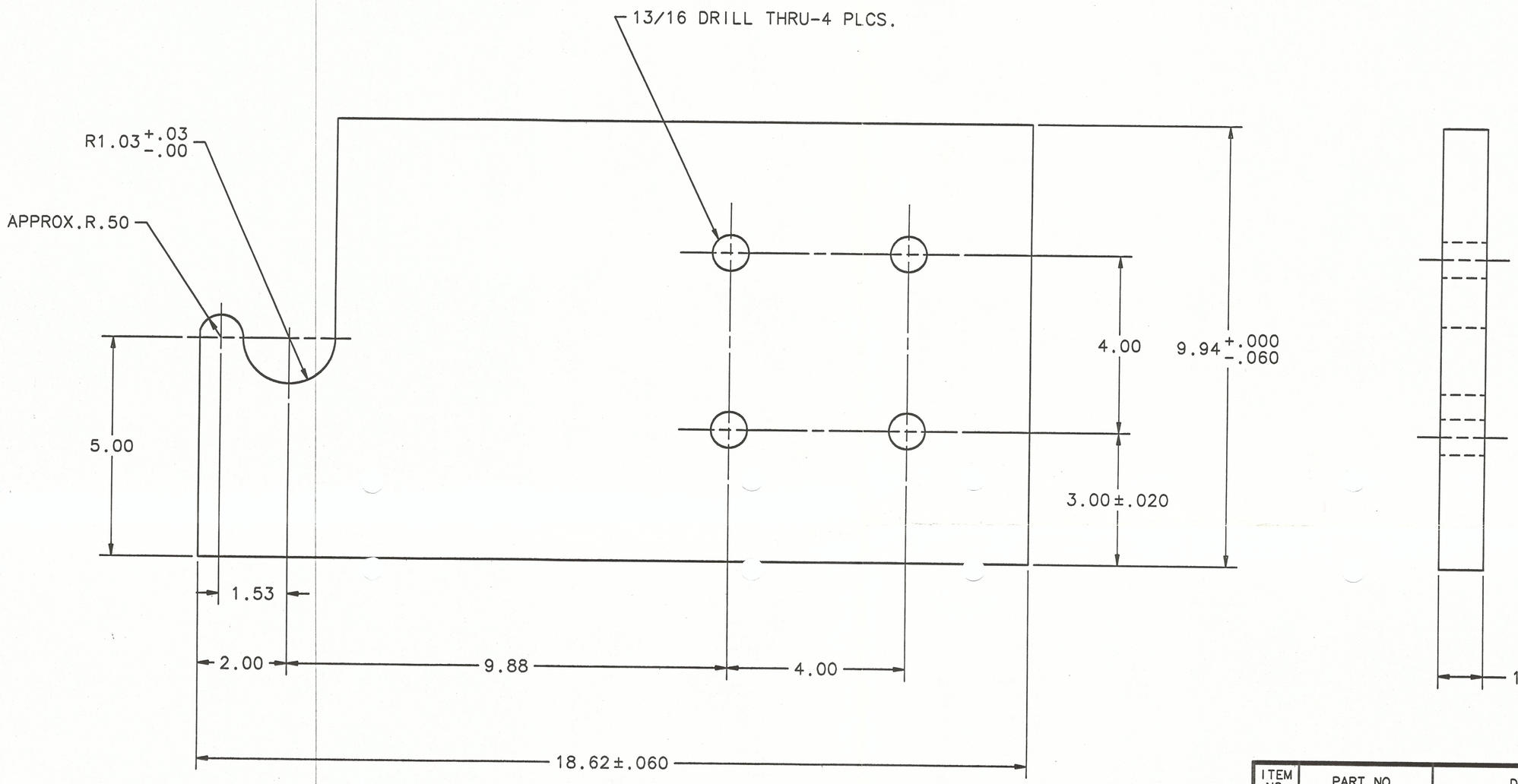

MAR 2001
REFERENCE ONLY
Not For Fabrication

ITEM NO.	PART NO.	DESCRIPTION OR SIZE	QTY. REQ.

PARTS LIST

UNLESS OTHERWISE SPECIFIED			ORIGINATOR	J.KILMER	
.XX	.XXX	ANGLES	DRAWN	D.TOUSIGNANT	2-22-01
± .03	±	±	CHECKED		2-28-01
			APPROVED		2/28/01

1. BREAK ALL SHARP EDGES .015 MAX.
2. DO NOT SCALE DRWG.
3. DIMENSIONING IN ACCORD WITH ANSI Y14.5M-1982 STD'S.
4. ALL DIMENSIONS ARE IN INCHES.

125 MAX. ALL MACHINED SURFACES

USED ON
9215.300-ME-397426

MATERIAL
1"THICK 1020 H.R.S.

FERMI NATIONAL ACCELERATOR LABORATORY
UNITED STATES DEPARTMENT OF ENERGY

PPD/MECHANICAL SUPPORT MINOS STEEL PLATE SPREADER BAR LIFTING PLATE

SCALE	DRAWING NUMBER	SHEET NO.	REV.
HALF	9215.300-MC-397427	1 OF 1	