BELOW-THE-HOOK LIFTING DEVICE
Engineering Note Cover Page

Lifting Device Numbers:

FNAL Site No.:_____ if applicable Div. Specific No.: 122 if applicable Asset No. _____ if applicable

ASME B30.20 Group: (check one)
- ˇ Group I Structural and Mechanical Lifting Devices
- ˇ Group II Vacuum Lifting Devices
- ˇ Group III Magnets, Close Proximity Operated
- ˇ Group IV Magnets, Remote Operated

Device Name or Description: Lifting Spreader Bar FOR B/C layer Pixel Assembly

Device was: (check all applicable)
- ˇ Purchased from a Commercial Lifting Device Manufacturer
  mfg. name: _____
- ✓ˇ Designed and Built at Fermilab ASSY. dwg #: 3823.130-MD-386074
- ˇ Designed by Fermilab and Built by a Vendor
  Assy drawing number: _____
- ˇ Provided by a User or Other Laboratory
- ˇ Other. Describe: _____

Engineering Note Prepared by: EDWARD CHI Date: 8/3/2000

Engineering Note Reviewed by: [signature] Date: 8/29/00

Lifting Device Data:

Capacity: 18,000 lbs

Fixture Weight: 5,100 lbs

Service: ˇ normal ˇ heavy ˇ severe (refer to B30.20 for definitions)

Duty Cycle: _____ 8, 16 or 24 hour rating (applicable to groups III, and IV)

Inspections Frequency: _____

Rated Load Test by FNAL (if applicable): Date: _____ Load: _____

ˇ Check if Load Test was by Vendor and attach the certificate.

Satisfactory Load Test Witnessed by: _____

Signature (of Load Test Witness): _____

Notes or Special Information:

Fermilab

D0 Lifting Spreader Bar and Hardwares For Assemblied Pixel frame

D-ZERO ENGINEERING NOTE #3823.130-EN-530

Author: Edward Chi
PPD/ETT/D-Zero Upgrade Group

Aug. 2, 2000

Reviewer:

CONTENTS

1. Weight Calculations

Weight Calculations for the B/C Lifting Fixture & Hardwares 1-1

2. Insert, tap hole and screw analysis and calculations 2-1

3. Structural Analysis and Calculations for the Lifting Spreader Bar and Hardwares 3-1

4. Weld Calculations 4-1

5. Finite Element Analysis of Lifting Hardares for C-layer Assemblied Pixel Frame 5-1

6. Appendix

Copies of Related Drawings, Specifications and References

FERMILAB
ENGINEERING NOTE

SECTION	PROJECT	SERIAL-CATEGORY	PAGE
			1.1

SUBJECT: weight cal - lifting spreader Bar weldment

NAME: E. CHI

DATE:

REVISION DATE:

Ref. dwg: MD-386800

for S24 x 121# (1)

$W_{Beam} = 36 FT \times 121 \#/FT$
$= 4,356 \#$

lifting lug: (1)

$W_{Lug} = 0.2833 \#/in^3 \times 6'' \times 8'' \times 3.50''$
$= 48 \#$

mounting plate: (4)

$W_{Plt} = 0.2833 \# in^{-3} \times [(2 \times 14.5'' \times 12.75'' \times 1.25'') +$
$(2 \times 14.50'' \times 20.50'' \times 1.25'')$
$= 342 \#$

GUSSET (24)

$W_{Gus} = 0.2833 \# in^{-3} \times 22.50'' \times 3'' \times 0.5'' \times 24$
$= 230 \#$

$W_{weld} = 4,976 \#$

FERMILAB ENGINEERING NOTE	SECTION	PROJECT	SERIAL-CATEGORY	PAGE 1.2
SUBJECT: weight cal. - Hoist Ring MTG. plate		NAME: E. CHI		
		DATE	REVISION DATE	

Ref. dwg: MC-386816

$$W_{MTG.} = 0.2833\ \#\,in^{-3} \times 2 \times 14.50'' \times 11.75'' \times 1.00''$$

$$= 97\ \#$$

Total weight of the lifting spreader Bar:

$$W_{sp} = W_{weldment} + W_{mtg.}$$

$$= 4,976\ \# + 97\ \# + 15\ \#\ (\text{for Hoist Ring})$$

$$= 5,088\ \#$$

FERMILAB
ENGINEERING NOTE

SECTION	PROJECT	SERIAL-CATEGORY	PAGE
			1.3

SUBJECT: weight cal - hardare lifting

NAME: E. CHI

DATE:

REVISION DATE:

Per drawing: MD-386801, MD-386802.

Tube: 8" × 4" × 5/16" 23.34 #/FT

$W_{Tube} = 87''/12 \times 23.34\#/FT$

$= 169\#$

$W_{Block_1} = 0.2833 \times 9'' \times 3.5'' \times 3''$

$= 27\#$

$W_{Block_2} \cong 0.2833\# in^{-3} \times [(14.5 \times 3.5'' \times 3'') + (2'' \times 2 \times 7.25'')$

$+ (2'' \times 3'' \times 5'')] = 60\#$

$W_{Blk_3} \cong 0.2833\# in^{-3} \times [(10'' \times 3.75'' \times 3'') + (8'' \times 2'' \times 3'')$

$+ (1.25'' \times 7.75'' \times 2'') = 51\#$

$W_{plt_1} = 0.2833\# \times 5'' \times 0.5'' \times 4'' \times 2$

$= 6\#$

$W_{plt_2} = 0.2833\# \times 5'' \times 4'' \times 2.5''$

$= 14\#$

$W_{plt_{3+4}} = 0.2833\# \times 11.0'' \times 7.50'' \times 2.25''$

$= 53\#$

$$W_{plt_5} = 0.2833\,\#\,in^{-3} \times 4'' \times 2'' \times 6''$$
$$= 14\,\#$$

$$W_{total\ for\ one\ end} = 169\,\# + 27\,\# + 60 + 51\,\# + 6\,\# + 14\,\# + 53\,\# + 14\,\# = 394\,\#$$
$$\cong 400\,\#$$

Total weight of the lifting spreader Bar with C-layer Assemblied pixel Frame lifting hardwares:

$$W_{sp-c} = W_{sp} + 2 \times W_{hardware}$$
$$= 5{,}088 + 2 \times 400\,\#$$
$$\cong 5{,}900\,\#$$

FERMILAB ENGINEERING NOTE	SECTION C-layer Pixel	PROJECT Upgrade	SERIAL-CATEGORY	PAGE 2.1
SUBJECT Spread lifting Bar - C-layer Pixel Frame, lifting tap Hole Analysis.		NAME E. CHI		
		DATE 6/12/00	REVISION DATE	

Per drawing: ME-373121, MD-386074
MC-372861

Ref: Keenserts. Catalog # 200-E

Per MC-372861, for # KNHL813J HEAVY DUTY
$\frac{1}{2}$-13 UNC-2B Insert

1.

Pull-out strength for the insert: P_{out1}

P_{out1} = min. SHEAR engagement Area × min. Ultimate SHEAR strength of the parent material (6061-T5)

$= 0.7368\ in^2 \times 20{,}000\ psi\ (F_{sy})$

$= 14{,}736\ \#$ (Per table 3.3-1, I-A-18, Alum Design manual)

$P_{out\,a1} = 14{,}736\#/3.0 = 4{,}912\#$

(Allowable pull out force)
Base on the yield strength.
(Per SECTION 20-1.2.2.2, ASME B30.20

2. Find out the pull out force for $\frac{1}{2}$-13 UNC-2B insert.
Assuming insert material:
Stainless Steel 303

where $F_Y = 35$ KSi $F_{Tu} = 90$ KSi

The pull out force P_{out_2} for pulling out the threaded shank of the screw through the connected plate shall not exceeds:

$$P_{out_2} = 0.85 t_c D F_{tu}$$

(per eq. § 5.3.2-1-1, Part I-A of ADM)

$$= 0.85 \times 0.75'' \times 0.5'' \times 90 \text{ KSI}$$

$$= 28{,}687^{\#}$$ (Based on F_{tu})

if Based on F_y, then ($F_y = 35$ KSI)

$$P_{out_2} = 11{,}156^{\#}$$

$$P_{out_{a2}} = P_{out_2} / 3.0$$

$$= 3{,}718^{\#}$$ for each inserts

$\therefore P_{out_{a2}} = 3{,}718^{\#} < P_{out_{a1}} = 4{,}912^{\#}$

$\therefore$ using $P_{out_a} = 3{,}718^{\#}$

Assuming using grade 5 carbon STL. bolt, then

$F_u = 120$ KSI, $F_y = 85$ KSI

Per table 1-8 of Standard Handbook of Fastening & joining, 2nd edition

the stress area $A_s = 0.7854\left[D - \frac{0.9743}{n}\right]^2$

for $\frac{1}{2}$-13, UNC-2B

$A_s = 0.1419 \text{ in}^2$

Allowable tensile load:

$P_{t_1} = (A_s \cdot F_y)/3.0$

$= 4{,}020^{\#} = P_{s_1}$

using spec. AISC, page 4-3

$F_t = 0.33 F_u = 39.6$ KSI

$P_{t_2} = A_s \cdot F_t = 5{,}619^{\#} > P_{t_1} = 4{,}020^{\#}$

$\therefore$ using $P_t = 4{,}020^{\#}$

$F_s = 0.17 F_u$

$= 20.4$ KSI

P_{s_2} = Nominal Area of the bolt $\times F_s$

$= \frac{0.5^2 \pi}{4} \text{ in}^2 \times 20{,}400 \# \text{ in}^{-2}$

$= 4{,}005 \#$

$\because P_{s2} = 4{,}005 \# < P_{s_1} = 4{,}020 \#$

$\therefore P_s = 4{,}005 \#$

$R_{1_c} = R_{2_c} = 11{,}500\ \#$

$M_{max_c} = \frac{Pl}{4}$

$= \frac{23{,}000\ \# \times 406.25''}{4}$

$= 2{,}335{,}938\ \#\ in$

FOR S shape I-Beam

S24 x 121

$A = 35.6\ in^2$

$I_x = 3{,}160\ in^4$

$S_x = 258\ in^3$

$F_Y = 36\ KSI$

$F_b = F_t = F_s$

$= F_Y / 3.0$

$= 12\ KSI$

(Per §20-1.2.2.2, ASME B30.20)

$f_{b_{xc}} = M_{max} / S_x$

$= 9.054\ KSI < F_b = 12\ KSI$

OK

$f_{v_c} = R / A = 11{,}500\ \# / 35.6\ in^2$

$= .33\ KSI < F_v = 12\ KSI$

OK

∴ the spread Bar is ok for lifting Assemblied c-layer Pixel Frame with application of lifting hardwares.

FOR B-layer assemblied lifting spreader Bar:

$$l_B = 211.12'' \times 2$$
$$= 422.25''$$

$$P_B = W_{Bar} + W_{pixel\ B}$$
$$= 5000\# + 16{,}500\#$$
$$= 21{,}500\#$$

$$R_{1_B} = R_{2_B} = 10{,}750\#$$

$$M_{max_B} = \frac{Pl}{4}$$
$$= \frac{21{,}500\# \times 422.25''}{4}$$
$$= 2{,}269{,}594\#\ in$$

$$f_{bx_B} = M_{max_B}/S_x$$
$$= 8.797\ KSi < F_b = 12\ KSi$$

OK 2

$$f_{v_B} = R_{1_B}/A$$
$$= 0.302\ KSi < F_v = 12\ KSi$$

OK 2

For A-layer Assemblied lifting spreader Bar:
per Fig 3.1 of Page 3.1

$$l_A = 155.50'' \times 2$$
$$= 311''$$

$$P_A = W_{BAR} + W_{pixel\ A}$$
$$= 5{,}000\# + 10{,}000\#$$
$$= 15{,}000\#$$

$\because\ l_A < l_c = 406.25''$

$P_A < P_c = 23{,}000\#$, $\quad R_{1A} = R_{2A}$

$\therefore\ f_{bxA} < f_{bxc}$

$f_{vA} < f_{vc}$

$\therefore$ the spreader Bar will be ok for lifting Assembled A-layer pixel frame.

Fig 3.3 is FBD for the lifting hardware for c-layer Assembled Frame.

Ref. to page 3.7

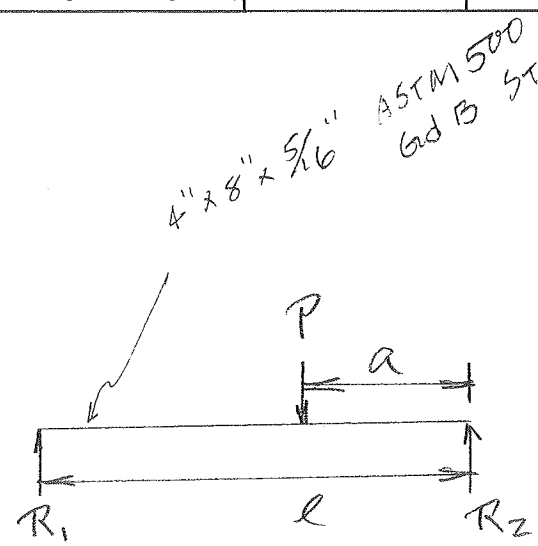

Fig 3.3

where

$\ell = 82$ in

$a = 29$ in , $b = \ell - a = 53$ in

$P = 8900^{\#}$ $(17{,}000^{\#}/2 + 400^{\#})$

For $4" \times 8" \times 5/16"$ Tube, $S_x = 13.5\ in^3$ $F_b = 46\,ksi / 3.0$

$A = 6.86\ in^2$ $= 15.33\,ksi$

$$M_{max} = \frac{Pab}{\ell}$$

$$= \frac{8900^{\#} \times 29\,in \times 53\,in}{82\,in}$$

$$= 166{,}821^{\#}\,in$$

$$f_b = M_{max}/S_x$$

$= 166,821 \#\cdot in / 13.5 in^3$

$= 12.358 \text{ ksi} < 46 \text{ ksi}/3.0 = 15.333 \text{ ksi} = F_b = F_v$

$$R_1 = \frac{Pa}{l}$$

$= 3,148^{\#}$

$$R_2 = \frac{Pb}{l}$$

$= 5,752^{\#}$

$f_v = R_2/A$

$= 5,752^{\#}/6.86 \text{ in}^2$

$= 839 \text{ psi} < F_v = 15,333 \text{ psi}$

$\therefore$ the $8'' \times 4'' \times \frac{5}{16}''$ STL. Tube is OK under current working condition.

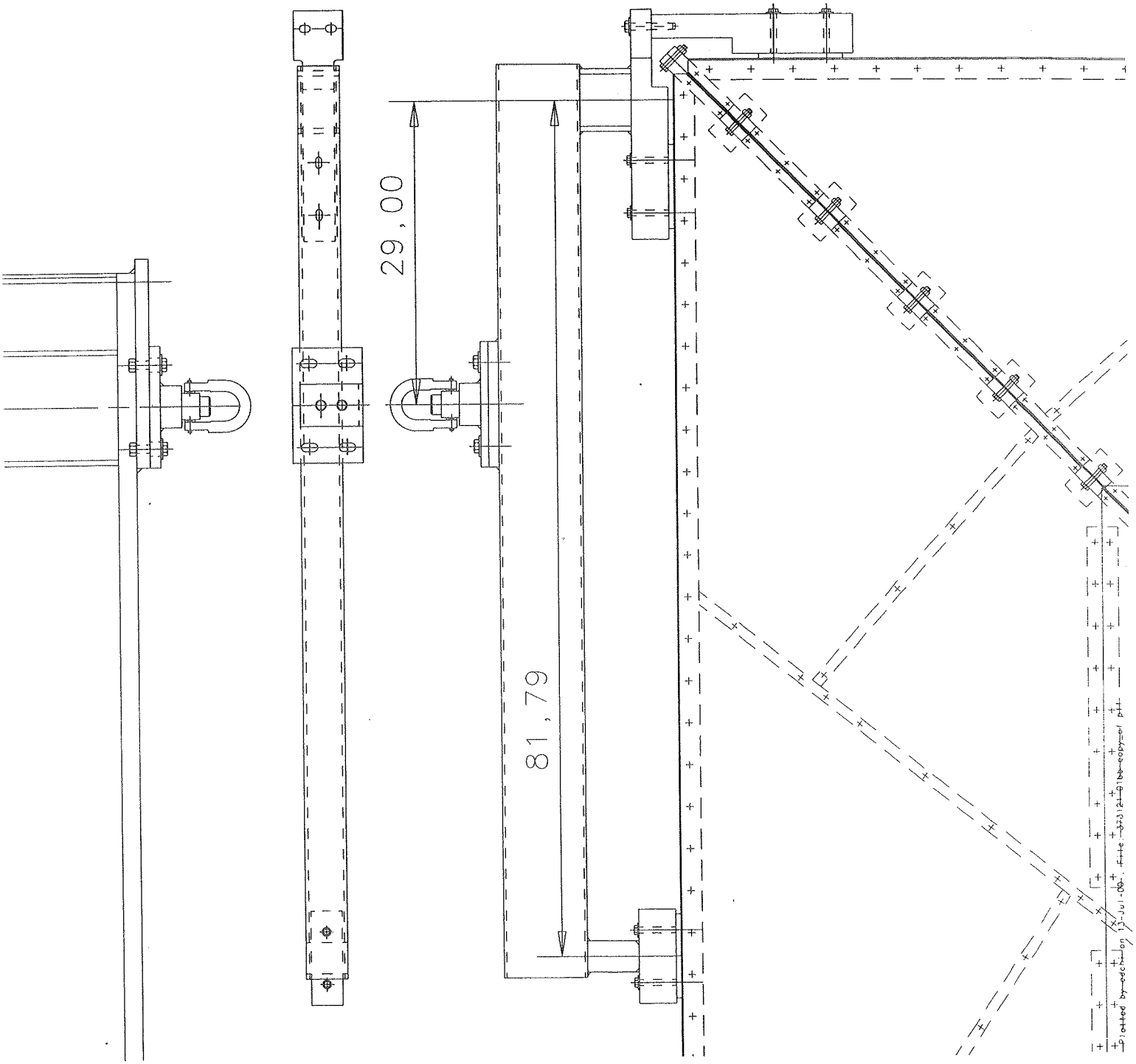
29.00
81.79

FERMILAB ENGINEERING NOTE	SECTION C-layer Lifting Bar	PROJECT Upgrade	SERIAL-CATEGORY	PAGE 4.1
SUBJECT lifting lug - spread Bar weldment		NAME E. CHI		
		DATE 7-24-00	REVISION DATE	

Ref. dwg: MD-386800.

Welding metal E70 $F_t = 70$ KSI

Base metal: A36 $F_Y = 36$ KSI

Allowable weld stress: Per section 20-1.2.2.a, ASME B30.2 & Per AWS D1.1, table 8.1, Part B:

$$F_{b_1} = F_{v_1} = 0.3 \times F_t$$
$$= 21 \text{ KSI}$$

Per ASME

$$F_{b_2} = F_{v_2} = F_Y/3.0$$
$$= 12 \text{ KSI}$$

$\because F_{b_2} = F_{v_2} < F_{b_1} = F_{v1}$

$\therefore F_b = F_v = 12 \text{ KSI} = F_t$

1. For lifting lug (applying load $P = 23{,}000^{\#}$)

Treating the weld as a line:

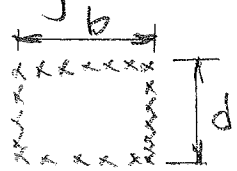

$L = 2(b+d)$
$= 2 \times (8+6)$ in

$l = 28$ in

$$f_t = P/l$$

$$= 23{,}000\ \#/28\ \text{in}$$

$$= 822\ \#/\text{in}$$

To find the allowable welding size C_a:

$$C_a = \frac{f_t}{.707 \times F_t}$$

$$= \frac{822\ \#\ \text{in}^{-1}}{.707 \times 12{,}000\ \#\ \text{in}^{-2}}$$

$$\cong 0.1\ \text{in} < C_d = 0.5\ \text{in} \quad \text{OK}_2$$

where C_d is the design weld size

2. Mounting plate: (welding w/ S24 x 121 I Beam)

14.50" x 20.50" x $1\frac{1}{4}$"

welding size $C_d = 0.5$"

welding length:

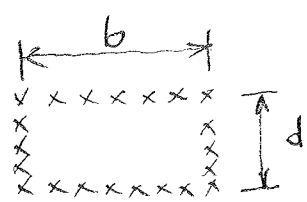

$l_w = 2(19+8)$

$= 54$ in

$P = 8900^{\#}$

$f_t = P/l_w$

$= 8900^{\#}/54$ in

$= 165^{\#}/\text{in}$

$C_a = f_t / 0.707 \times F_t$

$= \dfrac{165^{\#}\,\text{in}^{-1}}{0.707 \times 12{,}000^{\#}\,\text{in}^{-2}}$

$= 0.02$ in $< C_d = \frac{1}{2}''$ OK

3. Mounting plate: (welding with 8"x4"x5/16" Tube)

per drawing MD-386801

plate size: 11.00"x7.50"x1.25"

where for weld: b = 11"

d = 7.50"

$l_w = 2(b+d) = 37''$.

$P = 8{,}900\ \#$

$f_t = P/l_w$

$= 8900\ \#/37\ in$

$= 241\ \#/in$

$C_a = f_t / 0.707 \times F_t$

$= \dfrac{241\ \#\ in^{-1}}{0.707 \times 12{,}000\ \#\ in^{-2}}$

$= 0.0285\ in < C_d = 5/16'' = 0.3125\ in$ OK

4. Per drawing MD-386802

left corner view of main view

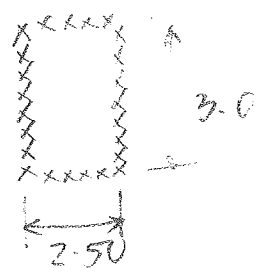

$l_w = 2(2.50+3)$

$= 11\ in$

$P = 8{,}900\ \#$

$f_t = P/l_w$

$= 8900\ \#/11\ in$

$= 809\ \#\ in^{-1}$

FERMILAB
ENGINEERING NOTE

SECTION	PROJECT	SERIAL-CATEGORY	PAGE
			4.5

SUBJECT

NAME E. CHI

DATE

REVISION DATE

$$C_a = f_t / 0.707 \times F_t$$

$$= \frac{809 \# \, in^{-1}}{.707 \times 12{,}000 \# \, in^{-2}}$$

$$= 0.096 \text{ in} < C_d = 5/16'' = 0.3125''$$

OK 2

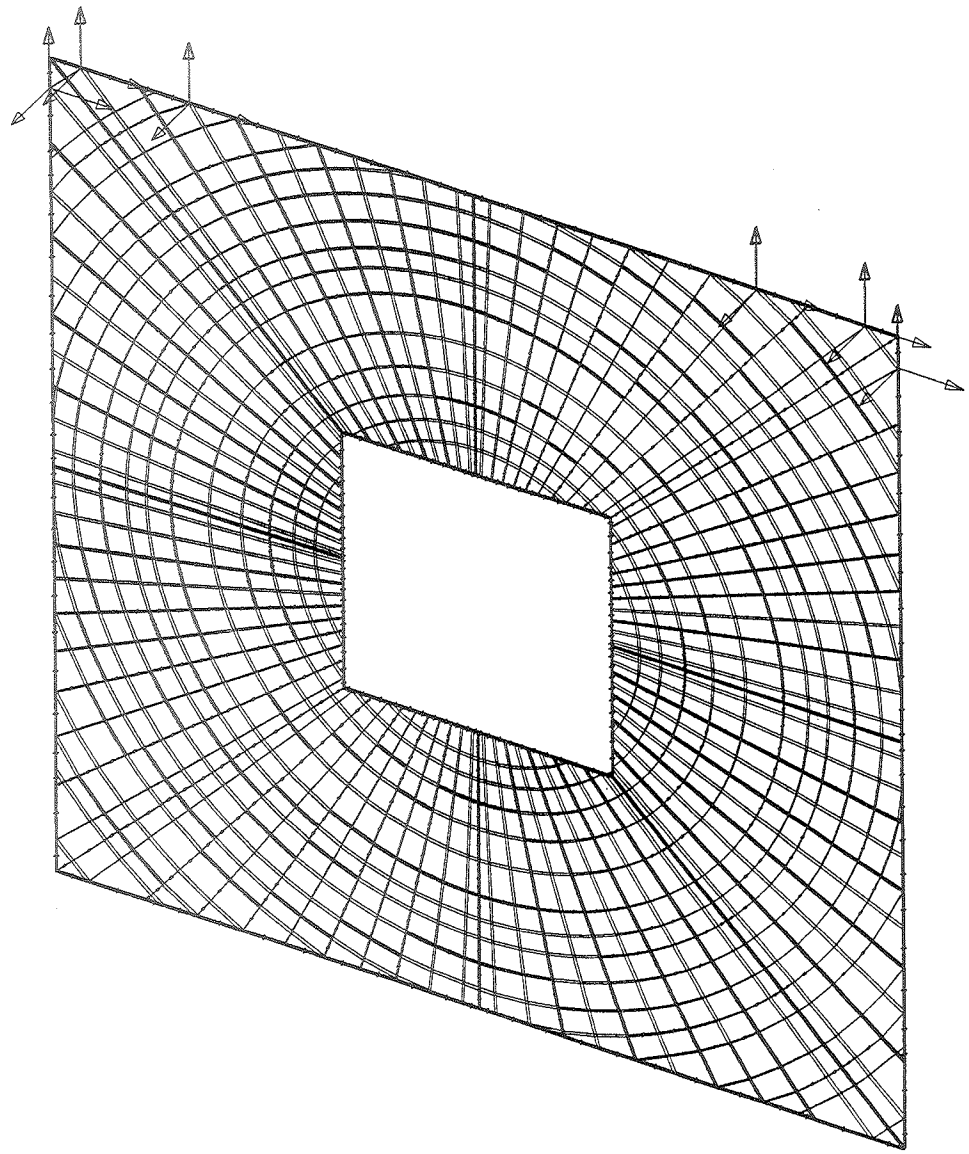

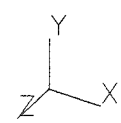

Plotted by edchi on 09-Jun-00 , File chi-pixel06.pff

/cadwhs/server02/ms_edchi/pixelC-frm6.mf1

RESULTS: 3- B.C. 1,STRESS_3,LOAD SET 1
STRESS - VON MISES MIN: 8.41E+00 MAX: 1.84E+03
DEFORMATION: 1- B.C. 1,DISPLACEMENT_1,LOAD SET 1
DISPLACEMENT - MAG MIN: 2.27E-05 MAX: 4.27E+00
FRAME OF REF: PART

VALUE OPTION:ACTUAL
SHELL SURFACE: TOP

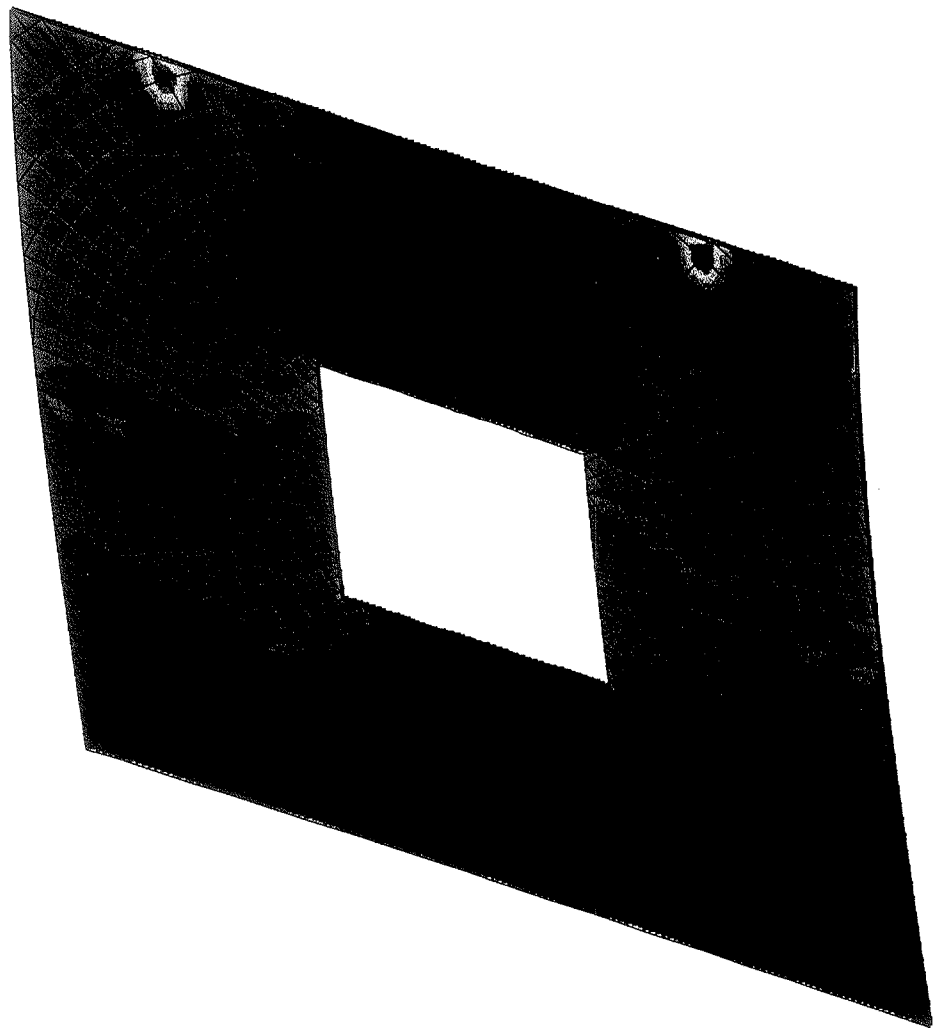

1.84E+03
1.66E+03
1.48E+03
1.29E+03
1.11E+03
9.25E+02
7.42E+02
5.59E+02
3.75E+02
1.92E+02
8.41E+00

Plotted by edchi on 07-Aug-00 , File: chi-pixlC6.pff

I-DEAS Master Series 6A: Simulation 07-Aug-00 14:43:49
/cadwhs/server02/ms_edchi/pixelC-frm6.mf1

Group ID : None
Result Set : 3 - B.C. 1,STRESS_3,LOAD SET 1
Report Type : Contour Units : IN
Result Type : STRESS
Frame of Reference: Part Data Component: Y-Component
Surface Type : Top

	Stress-XX	Stress-XY	Stress-YY	Stress-XZ	Stress-YZ	Stress-ZZ
	436	575	436	1614	24	1613
Maximum	5.932E+02	7.097E+02	1.681E+03	1.116E-12	2.086E-12	3.504E-26
	438	159	1762	2385	1613	24
Minimum	-6.959E+02	-7.110E+02	-5.100E+02	-9.012E-13	-6.872E-12	-9.664E-27
Average	1.765E+01	-5.100E-03	7.413E+01	1.813E-14	-2.272E-13	9.755E-28

I-DEAS Master Series 6A: Simulation 07-Aug-00 14:42:26
/cadwhs/server02/ms_edchi/pixelC-frm6.mf1

Group ID : None
Result Set : 1 - B.C. 1,DISPLACEMENT_1,LOAD SET 1
Report Type : Contour Units : IN
Result Type : DISPLACEMENT
Frame of Reference: Part Data Component: Z-Component

	Displa-X	Displa-Y	Displa-Z	Displa-RX	Displa-RY	Displa-RZ
	1391	2135	177	2831	1889	435
Maximum	2.022E-03	7.197E-03	6.545E-02	1.677E-02	2.284E-03	9.954E-05
	1759	2373	2373	436	1324	19
Minimum	-2.018E-03	-1.960E-02	-4.267E+00	0.000E+00	-2.162E-03	-9.954E-05
Average	1.205E-06	-5.010E-03	-1.723E+00	9.165E-03	1.495E-06	-3.443E-08

I-DEAS Master Series 6A: Simulation 07-Aug-00 14:43:13
/cadwhs/server02/ms_edchi/pixelC-frm6.mf1

Group ID : None
Result Set : 2 - B.C. 1,REACTION FORCE_2,LOAD SET 1
Report Type : Contour Units : IN
Result Type : REACTION FORCE
Frame of Reference: Part Data Component: Z-Component

	Reacti-X	Reacti-Y	Reacti-Z	Reacti-RX	Reacti-RY	Reacti-RZ
Total	-1.277E+00	1.701E+04	8.028E+00	0.000E+00	0.000E+00	0.000E+00
	742	20	745	20	20	20
Maximum	1.222E+03	8.542E+03	3.411E+01	0.000E+00	0.000E+00	0.000E+00
	350	1532	742	20	20	20
Minimum	-1.222E+03	-4.778E+03	-2.449E+01	0.000E+00	0.000E+00	0.000E+00
Average	-1.064E-01	1.417E+03	6.690E-01	0.000E+00	0.000E+00	0.000E+00

The weight, moment arm and moment calculations for the C-layer A-type pixel octant

Type I octant

pixel row number	number of pixels	pmt arm (inches)	pixel arm (inches)	pmt weight (lbs)	weight/pixel (lbs)	Wt1/pixel (lbs)	% of weight of each row	Wmis/pixel (lbs)	ave. arm (inches)	Mx/pixel (in-lb)	Wf/pixel (lbs)	Wt/pixel (lbs)	Wt/row (lbs)	Mx/row (in-lb)
1	7	4.3325	2.0826	2.5	3.21	5.7100	0.040655	1.6668	2.8451	20.988	4.942	-12.3193	-86.2350	146.914
2	9	4.2203	2.0752	2.5	3.93	6.4300	0.058861	1.8770	2.7208	22.601	5.566	-13.8727	-124.8541	203.413
3	10	4.121	2.0689	2.5	4.88	7.3800	0.075064	2.1543	2.6070	24.856	6.388	-15.9223	-159.2229	248.558
4	10	4.0332	2.0638	2.5	6.11	8.6100	0.087575	2.5134	2.5064	27.880	7.453	-18.5760	-185.7601	278.800
5	10	3.9563	2.06	2.5	7.76	10.2600	0.104357	2.9951	2.4177	32.046	8.881	-22.1359	-221.3587	320.462
6	10	3.8891	2.0573	2.5	10	12.5000	0.127141	3.6489	2.3409	37.803	10.820	-26.9687	-269.6865	378.027
7	10	3.8301	2.0553	2.5	13.13	15.6300	0.158977	4.5626	2.2750	45.939	13.529	-33.7216	-337.2160	459.389
8	10	3.7738	2.0518	2.5	17.64	20.1400	0.204850	5.8792	2.2173	57.691	17.433	-43.4519	-434.5189	576.912
9	5	3.7504	2.0199	2.5	11.54	14.0400	0.071402	4.0985	2.2584	40.964	12.153	-30.2912	-151.4560	204.821
10	3	3.7115	2.0171	2.5	13.61	16.1100	0.049158	4.7028	2.2206	46.217	13.944	-34.7572	-104.2716	138.652
11	1	1.9635	1.2404	2.5	19.09	21.5900	0.021960	6.3025	1.3052	36.406	18.688	-46.5803	-46.5803	36.406
							1.0000							
pixels/octant	85			Total pixel weight per octant:		983.16		Total weight per octant (including pixels, frame and accessories):					-2121	
												Total moment per octant:		2992

Where:
- pmt wt., wt. per pixel: per A. Stefanik's "C-layer fishscale sizes" dated on 8/13/98
- pmt arm, pixel arm: per A. stefanik's "C-layer pixel assembly" dated on 8/25/98.
- % of wt. of each row: ((wt1/pixel) x number of pixel of each row)/tot. pixel wt. per octant
- Wmis/pixel: (% of wt. Of each row x Wmis)/# of pixels of each row
- ave. arm: (pixel arm x (wt/pixel + Wmis/pixel)+ (pmt. Arm x pmt wt))/(wt/pixel + Wmis/pixel + pmt wt)
- Mx/pixel: ave. arm x (pmt wt. + wt/pixel + Wmis/pixel)
- Wf/pixel: (% of wt of each row x wt of the frame per octant)/# of pixels of each row
- Wt/pixel: Wt1/pixel + Wmis/pixel + Wf/pixel
- Wt/row: Wt/pixel x # of pixel of each row
- Mx/row: Mx/pixel x # of pixels of each row

Assumptions: mtg bracket weight Wm=137 lbs/octant, cable weight Wc=150 lbs/octant, assuming moment arm as the same as pixel arm.
the weight distribution as proportional ratio as the each row of pixel. Wmis=Wm + Wc =287 lbs,
Wt1=pmt weight + weight/pixel, Wf=weight of the support frame per octant=851 lbs (per Ed Chi's wt. Cal. Dated on 03/15/99)
Wt=total weight of the C-layer A type pixel octant=Wt1+Wmic.+Wf=2,121 lbs (revised on 09/28/99).

The weight, moment arm and moment calculations for the B-layer A-type pixel octant

Type I octant pixel row number	number of pixels	pmt arm (inches)	pixel arm (inches)	pmt weight (lbs)	weight/pixel (lbs)	Wt1/pixel (lbs)	% of weight of each row	Wmis/pixel (lbs)	ave. arm (inches)	Mx/pixel (in-lb)	Wf/pixel (lbs)	Wt/pixel (lbs)	Wt/row (lbs)	Mx/row (in-lb)
1	7	4.52863	2.089911	2.5	2.33	4.8300	0.038008	1.4823	3.0558	19.289	3.703	10.0153	70.1072	135.023
2	9	4.389599	2.079738	2.5	2.84	5.3400	0.054027	1.6388	2.9072	20.289	4.094	11.0728	99.6555	182.599
3	10	4.266304	2.071445	2.5	3.49	5.9900	0.067337	1.8383	2.7724	21.703	4.592	12.4207	124.2065	217.030
4	10	4.158204	2.064926	2.5	4.33	6.8300	0.076780	2.0961	2.6512	23.665	5.236	14.1624	141.6245	236.649
5	10	4.061595	2.059496	2.5	5.47	7.9700	0.089595	2.4459	2.5400	26.457	6.110	16.5263	165.2631	264.568
6	10	3.978243	2.055904	2.5	7	9.5000	0.106794	2.9155	2.4430	30.331	7.283	19.6989	196.9886	303.309
7	10	3.904532	2.052842	2.5	9.12	11.6200	0.130626	3.5661	2.3577	35.804	8.909	24.0948	240.9482	358.039
8	10	3.835347	2.049038	2.5	12.18	14.6800	0.165025	4.5052	2.2818	43.777	11.255	30.4399	304.3993	437.770
9	10	3.821602	2.013481	2.5	7.99	10.4900	0.117923	3.2193	2.3432	32.124	8.042	21.7517	217.5169	321.237
10	6	3.779141	2.01253	2.5	9.39	11.8900	0.080197	3.6490	2.2968	35.689	9.116	24.6547	147.9281	214.135
11	3	3.728583	2.020378	2.5	13.09	15.5900	0.052577	4.7845	2.2300	45.435	11.952	32.3269	96.9806	136.304
12	1	4.418316	2.351858	2.5	16.28	18.7800	0.021112	5.7635	2.5623	62.889	14.398	38.9415	38.9415	62.889
pixels/octant	96		Total pixel weight per octant:			889.56		Total weight per octant (including pixels, frame and accessories):					1845	
												Total moment per octant:		2870

Where:
- pmt wt., wt. per pixel: per A. Stefanik's "B-layer fishscale sizes" dated on 12/2/98
- % of wt. of each row: ((wt1/pixel) x number of pixel of each row)/tot. pixel wt. per octant
- Wmis/pixel: (% of wt. Of each row x Wmis)/# of pixels of each row
- ave. arm: (pixel arm x (wt/pixel + Wmis/pixel)+ (pmt. Arm x pmt wt))/(wt/pixel + Wmis/pixel + pmt wt)
- Mx/pixel: ave. arm x (pmt wt. + wt/pixel + Wmis/pixel)
- Wf/pixel: (% of wt of each row x wt of the frame per octant)/# of pixels of each row
- Wt/pixel: Wt1/pixel + Wmis/pixel + Wf/pixel
- Wt/row: Wt/pixel x # of pixel of each row
- Mx/row: Mx/pixel x # of pixels of each row
- pmt arm, pixel arm: Measured from A. Stefanik's B-layer pixel assembly solid model.

Assumptions: mtg bracket weight Wm=123 lbs/octant, cable weight Wc=150 lbs/octant, same moment arm as the pixel, the weight distribution as proportional ratio as the each row of pixel. Wmis=Wm + Wc =273 lbs, Wt1=pmt weight + weight/pixel, Wf=weight of the support frame per octant=682 lbs, Wt=total weight of the B-layer A type pixel octant=Wt1+Wmic.+Wf=1,845 lbs.

Socket Head Cap Screws

6.3

For information about socket head cap screw thread lengths, dimensions, and hex keys, see page 2740.

18-8 Stainless Steel Vented Head

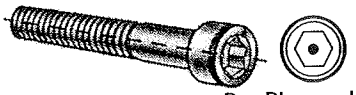

Chemically cleaned, precision manufactured, and vented, these screws are often used in vacuum systems. Each screw has a small hole drilled through the length which acts as a tiny air shaft. Class 3A thread fit. Length is measured from under head. Package quantity is 5.

Lg.		Per Pkg.
2-56	*Vent Dia.: .031"*	
3/16"	93235A076	$3.97
1/4"	93235A077	4.45
5/16"	93235A078	5.55
3/8"	93235A079	6.03
4-40	*Vent Dia.: .036"*	
1/4"	93235A106	$4.33
5/16"	93235A107	5.18
3/8"	93235A108	5.30
1/2"	93235A110	7.97
3/4"	93235A114 ◆	17.12
6-32	*Vent Dia.: .038"*	
1/4"	93235A144	$3.36
5/16"	93235A145	3.48
3/8"	93235A146	3.97
1/2"	93235A148	4.82
5/8"	93235A150	5.30
3/4"	93235A152	7.80
1"	93235A154	13.11
8-32	*Vent Dia.: .042"*	
3/8"	93235A192	$4.45
1/2"	93235A194	5.30
5/8"	93235A196	6.27
3/4"	93235A197	7.73
8-32 (Cont.)		
1"	93235A199	$10.98
10-32	*Vent Dia.: .049"*	
3/8"	93235A240	$3.03
1/2"	93235A242	4.02
5/8"	93235A244	4.70
3/4"	93235A245	5.55
7/8"	93235A246	7.73
1"	93235A247	9.18
1 1/4"	93235A249	12.50
1/4"-20	*Vent Dia.: .070"*	
1/2"	93235A537	$4.33
5/8"	93235A539	5.18
1/4"-20 (Cont.)		
3/4"	93235A540	$5.55
1"	93235A542	7.00
1 1/4"	93235A544	12.50
1 3/4"	93235A546 ◆	21.89
5/16"-18	*Vent Dia.: .078"*	
3/4"	93235A781	$6.14
1"	93235A783	7.88
3/8"-16	*Vent Dia.: .093"*	
1"	93235A924	$8.18
1 1/2"	93235A926	14.17

Self-Locking

With Nylon Patch

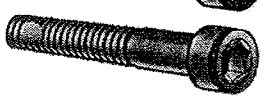

With Nylon Pellet

A nylon locking element (either a patch bonded on the threads or a pellet set within the threads) holds these screws firmly in place, helping to prevent loosening under vibration. Screws are reusable. Class 3A thread fit. Made in the U.S.A. Length is measured from under head.

Alloy Steel—Made of black-oxide finish, heat-treated alloy steel that meets ASTM 574. Minimum tensile strength is 180,000 psi. *Screws with nylon patch* have a Rockwell hardness of C39-45. Patch withstands temperatures up to 250° F. *Screw with nylon pellet* have a Rockwell hardness of C36-45. Pellet has a temperature range of −50° to +250° F.

18-8 Stainless Steel with Nylon Patch—Features excellent corrosion resistance. Rockwell hardness is B85-95. Minimum tensile strength is 80,000 psi. Temperature range for nylon patch is −70° to +250° F.

Alloy Steel with Nylon Patch

Lg.	Pkg. Qty.		Per 100
4-40		*Coarse Thread*	
1/4"	100	91205A105 ◆	$37.25
3/8"	100	91205A108 ◆	37.50
1/2"	100	91205A110 ◆	38.00
5-40		*Coarse Thread*	
3/8"	100	91205A120 ◆	$35.50
1/2"	100	91205A124 ◆	36.25
6-32		*Coarse Thread*	
1/4"	100	91205A144 ◆	$25.68
3/8"	100	91205A146 ◆	26.05
1/2"	100	91205A148 ◆	26.63
5/8"	100	91205A150 ◆	34.39
3/4"	100	91205A151 ◆	27.55
7/8"	100	91205A152 ◆	28.60
1"	100	91205A153 ◆	29.65
8-32		*Coarse Thread*	
3/8"	100	91205A192 ◆	$27.20
1/2"	100	91205A194 ◆	27.65
5/8"	100	91205A195 ◆	28.15
3/4"	100	91205A197 ◆	28.63
7/8"	100	91205A198 ◆	29.65
1"	100	91205A193 ◆	31.83
1 1/4"	100	91205A201 ◆	32.33
1 1/2"	100	91205A203 ◆	34.78
10-24		*Coarse Thread*	
3/8"	100	91205A240 ◆	$28.38
1/2"	100	91205A242 ◆	28.60
5/8"	100	91205A244 ◆	29.40
3/4"	100	91205A245 ◆	30.00
1"	100	91205A247 ◆	32.50
10-32		*Fine Thread*	
3/8"	100	91205A340 ◆	$28.38
1/2"	100	91205A342 ◆	28.60
5/8"	100	91205A344 ◆	29.40
3/4"	100	91205A345 ◆	30.00
7/8"	100	91205A346 ◆	31.08
1"	100	91205A347 ◆	32.50
1 1/4"	100	91205A349 ◆	33.58
1 1/2"	100	91205A351 ◆	36.25
1 3/4"	100	91205A353 ◆	37.75
2"	100	91205A355 ◆	39.55
1/4"-20		*Coarse Thread*	
3/8"	100	91205A535 ◆	$30.00
1/2"	100	91205A537 ◆	30.80
1/4"-20 (Cont.)			
5/8"	100	91205A539 ◆	$31.08
3/4"	100	91205A540 ◆	31.55
7/8"	100	91205A541 ◆	32.83
1"	100	91205A542 ◆	34.10
1 1/4"	100	91205A544 ◆	35.13
1 1/2"	100	91205A546 ◆	37.75
1 3/4"	100	91205A548 ◆	39.28
2"	100	91205A550 ◆	41.20
2 1/2"	100	91205A552 ◆	49.30
3"	100	91205A554 ◆	60.25
1/4"-28		*Fine Thread*	
1/2"	100	91205A560 ◆	$30.80
3/4"	100	91205A563 ◆	31.55
1"	100	91205A565 ◆	34.10
1 1/4"	100	91205A667 ◆	35.25
1 1/2"	100	91205A669 ◆	37.75
1 3/4"	100	91205A671 ◆	39.38
2"	100	91205A673 ◆	41.20
5/16"-18		*Coarse Thread*	
1/2"	100	91205A578 ◆	$34.45
3/4"	100	91205A581 ◆	35.63
1"	100	91205A583 ◆	38.00
1 1/4"	100	91205A585 ◆	39.25
1 1/2"	100	91205A587 ◆	41.83
1 3/4"	100	91205A584 ◆	43.58
2"	100	91205A591 ◆	45.43
2 1/2"	100	91205A593 ◆	54.38
3"	100	91205A595 ◆	76.10
5/16"-24		*Fine Thread*	
3/4"	100	91205A597 ◆	$36.25
1"	100	91205A599 ◆	38.55
1 1/4"	100	91205A601 ◆	39.55
1 1/2"	100	91205A603 ◆	42.18
3/8"-16		*Coarse Thread*	
3/4"	100	91205A622 ◆	$40.98
7/8"	100	91205A623 ◆	42.25
1"	100	91205A624 ◆	43.55
1 1/4"	100	91205A626 ◆	45.43
1 1/2"	100	91205A628 ◆	48.00
1 3/4"	50	91205A630 ◆	50.00
2"	50	91205A632 ◆	51.95
2 1/4"	50	91205A633 ◆	59.45
3/8"-16 (Cont.)			
2 1/2"	50	91205A634 ◆	$62.70
3"	50	91205A636 ◆	79.29
3/8"-24		*Fine Thread*	
1"	100	91205A621 ◆	$43.80
1 1/4"	100	91205A627 ◆	45.90
1 1/2"	100	91205A629 ◆	48.00
			Each
1/2"-13		*Coarse Thread*	
1"	50	91205A712 ◆	$84.20
1 1/4"	50	91205A714 ◆	89.25
1 1/2"	50	91205A716 ◆	94.50
1 3/4"	50	91205A718 ◆	99.50
2"	50	91205A720 ◆	105.00
2 1/2"	25	91205A722 ◆	119.05
3"	25	91205A724 ◆	136.63
			Each

Alloy Steel with Nylon Pellet

Lg.	Pkg. Qty.		Per 100
8-32		*Coarse Thread*	
1/2"	1	91910A120	$0.36
3/4"	1	91910A125	.37
10-32		*Fine Thread*	
1/2"	1	91910A305	$0.37
3/4"	1	91910A310	.39
1"	1	91910A315	.42
1/4"-20		*Coarse Thread*	
1/2"	1	91910A405	$0.40
5/8"	1	91910A407	.40
3/4"	1	91910A410	.41
1"	1	91910A415	.44
			Per 100
1/4"-20 (Cont.)			
1 1/4"	1	91910A420	$0.45
1 1/2"	1	91910A425	.49
5/16"-18		*Coarse Thread*	
1"	1	91910A515	$0.49
1 1/4"	1	91910A520	.51
1 1/2"	1	91910A525	.54
3/8"-16		*Coarse Thread*	
1"	1	91910A560	$0.56
1 1/4"	1	91910A565	.59
1 1/2"	1	91910A570	.62
			Per 100

18-8 Stainless Steel with Nylon Patch

Lg.	Pkg. Qty.		Per 100
6-32		*Coarse Thread*	
1/4"	100	93705A144	$13.92
3/8"	100	93705A146	14.32
1/2"	100	93705A148	14.72
8-32		*Coarse Thread*	
1/4"	100	93705A190 ◆	$17.61
3/8"	100	93705A192 ◆	16.16
1/2"	100	93705A194 ◆	16.97
3/4"	50	93705A196	19.55
10-24		*Coarse Thread*	
3/8"	100	93705A240 ◆	$19.04
1/2"	100	93705A242 ◆	19.66
3/4"	100	93705A245 ◆	20.55
1"	100	93705A247 ◆	21.45
10-32		*Fine Thread*	
3/8"	100	93705A260 ◆	$19.04
1/2"	100	93705A264 ◆	19.66
3/4"	100	93705A266 ◆	20.55
1"	100	93705A268 ◆	21.45
1/4"-20		*Coarse Thread*	
1/2"	100	93705A537 ◆	$21.53
3/4"	100	93705A540 ◆	22.98
1"	100	93705A542 ◆	25.78
1 1/4"	100	93705A544 ◆	29.17
1 1/2"	100	93705A546 ◆	32.62
5/16"-18		*Coarse Thread*	
3/4"	50	93705A581 ◆	$42.21
1"	50	93705A583 ◆	46.44
1 1/4"	50	93705A585 ◆	50.67
1 1/2"	50	93705A587 ◆	54.90
3/8"-16		*Coarse Thread*	
1"	50	93705A624 ◆	$59.38
1 1/4"	50	93705A626 ◆	63.84
1 1/2"	50	93705A628 ◆	68.31
1/2"-13		*Coarse Thread*	
1 1/2"	25	93705A641 ◆	$167.68
2"	25	93705A643 ◆	192.87

Socket Screw Selectors

Inch Selector—Handy slide chart lists specifications and torque requirements for socket head cap screws, flat head cap screws, low head cap screws, and set screws; specifications for shoulder screws and pressure plugs. Made of heavy duty 9" Ht. × 6 1/2" Wd. card stock.
92243A51 ..... Each $2.50

Metric Selector—Handy slide chart lists specifications and torque requirements for socket head cap screws, flat head cap screws, button head cap screws, and set screws. Made of heavy duty 9" Ht. × 6 1/2" Wd. card stock.
92243A61 ..... Each $2.50

◆ ***These sizes are available in less than full-package quantities. Prices are 10% to 25% higher.***

About Hoist Rings

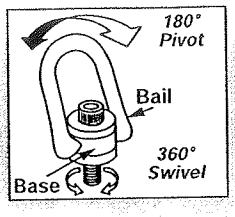

Hoist rings pivot and swivel to help compensate for pitch, roll, and sway when lifting heavy or unbalanced loads. A hoist ring's ability to pivot 180° and swivel 360° from a center point allows resistance to stresses that would bend or break an eyebolt.

Safety Note: The hoist ring base should be installed flush to the mounting surface, and tightened to the recommended torque shown in table. Some loosening may develop after prolonged service. Retighten mounting screws periodically to maintain specified torque.

Estimating Required Work Load Limits

Use the following formula to help select the hoist ring with the proper work load limit.

$$\frac{\text{Total Object Weight}}{\text{\# of Hoist Rings}} = \text{Required Work Load Limit}$$

Hoist Rings

Hoist Rings

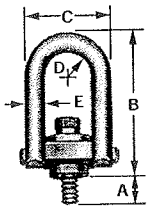

Machined Steel

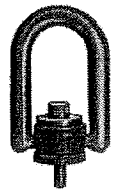

Forged Steel

Machined Alloy Steel—Also known as safety engineered hoist rings. These rings are machined for precise fit, and are easy to disassemble for inspection. **Also Available:** Larger thread sizes. Ask for 3052T777 and specify thread size and work load limit desired.

Machined Type 304 Stainless Steel—Same features as the rings above, with increased corrosion resistance.

Metric Machined Alloy Steel—Same features as machined alloy steel rings above.

Forged Steel—Forged construction means a high work load limit at an economical price. These rings are easy to disassemble for inspection.

Also Available: Replacement bolts. For ***machined alloy steel***, ask for 3052T888 and specify McMaster-Carr hoist ring part number and manufacturer (stamped on hoist ring). For ***machined Type 304 stainless steel***, ask for 2949T777 and specify McMaster-Carr hoist ring part number. For ***metric machined alloy steel***, ask for 29495T888 and specify McMaster-Carr hoist ring part number. For ***forged steel***, ask for 2994T888 and specify McMaster-Carr hoist ring part number.

Machined Alloy Steel

Dimensions A	B	C	D	E	Thread Torque, Ft.-lbs.		Each★
5/16"-18 Thread Size—800-lb. Work Load Limit							
0.29"	2.63"	1.61"	0.43"	0.38"	7	**3052T102**	$62.73
0.56"	2.67"	1.84"	0.43"	0.38"	7	**3052T55**	63.26
3/8"-16 Thread Size—1,000-lb. Work Load Limit							
0.56"	2.67"	1.84"	0.43"	0.38"	12	**3052T56**	63.26
1/2"-13 Thread Size—2,500-lb. Work Load Limit							
1.07"	3.75"	2.4"	0.7"	0.5"	28	**3052T57**	80.11
1"	4.78"	3.52"	0.88"	0.75"	28	**3052T72**	79.07
0.75"	6.75"	3.25"	0.88"	0.75"	28	**3052T87**	86.67
0.75"	4.78"	3.52"	0.88"	0.75"	28	**3052T58**	79.07
1"	6.75"	3.25"	0.88"	0.75"	28	**3052T86**	86.67
1.25"	4.78"	3.52"	0.88"	0.75"	28	**3052T81**	82.93
1.25"	6.75"	3.25"	0.88"	0.75"	28	**3052T88**	86.67
5/8"-11 Thread Size—4,000-lb. Work Load Limit							
0.75"	4.75"	3.25"	0.88"	0.75"	60	**3052T73**	80.11
1"	4.78"	3.52"	0.88"	0.75"	60	**3052T59**	79.07
1"	6.75"	3.25"	0.88"	0.75"	60	**3052T89**	86.67
1.25"	4.78"	3.52"	0.88"	0.75"	60	**3052T61**	79.07
1.25"	6.75"	3.25"	0.88"	0.75"	60	**3052T91**	86.67
3/4"-10 Thread Size—5,000-lb. Work Load Limit							
1"	4.75"	3.52"	0.88"	0.75"	100	**3052T62**	79.07
1"	6.75"	3.25"	0.88"	0.75"	100	**3052T92**	86.67
1.5"	4.78"	3.52"	0.88"	0.75"	100	**3052T63**	79.07
1.5"	6.75"	3.25"	0.88"	0.75"	100	**3052T93**	86.67
3/4"-10 Thread Size—7,000-lb. Work Load Limit							
1.04"	6.52"	4.8"	1.4"	1"	100	**3052T64**	159.76
1"	8.11"	4.8"	1.4"	1"	100	**3052T94**	188.84
1.5"	6.52"	5.14"	1.4"	1"	100	**3052T82**	172.98
1.5"	8.11"	4.8"	1.4"	1"	100	**3052T95**	188.84
7/8"-9 Thread Size—8,000-lb. Work Load Limit							
1.04"	6.52"	4.8"	1.4"	1"	160	**3052T65**	175.15
1"	8.11"	4.8"	1.4"	1"	160	**3052T96**	193.95
1"-8 Thread Size—10,000-lb. Work Load Limit							
1.25"	6.5"	4.81"	1.4"	1"	230	**3052T66**	183.37
1.25"	8.11"	4.81"	1.4"	1"	230	**3052T97**	193.95
1.54"	6.52"	4.8"	1.4"	1"	230	**3052T67**	177.49
1.5"	8.11"	4.81"	1.4"	1"	230	**3052T98**	193.95
2.25"	6.52"	5.14"	1.4"	1"	230	**3052T83**	187.24
2.25"	8.11"	4.81"	1.4"	1"	230	**3052T101**	184.76
1 1/4"-7 Thread Size—15,000-lb. Work Load Limit							
2"	8.75"	6"	1.75"	1.25"	470	**3052T68**	297.49

Machined Type 304 Stainless Steel

Dimensions A	B	C	D	E	Thread Torque, Ft.-lbs.		Each★
3/8"-16 Thread Size—500-lb. Work Load Limit							
0.54"	2.67"	1.61"	0.43"	0.38"	12	**2949T32**	$211.91
1/2"-13 Thread Size—1,250-lb. Work Load Limit							
1.07"	3.77"	2.4"	0.7"	0.5"	28	**2949T33**	275.74
1.28"	4.78"	3.25"	0.88"	0.75"	28	**2949T35**	275.74
5/8"-11 Thread Size—2,000-lb. Work Load Limit							
1.28"	4.78"	3.25"	0.88"	0.75"	60	**2949T37**	275.74
3/4"-10 Thread Size—2,500-lb. Work Load Limit							
1.53"	4.78"	3.25"	0.88"	0.75"	100	**2949T39**	275.74
1"-8 Thread Size—5,000-lb. Work Load Limit							
2.29"	6.52"	4.93"	1.4"	1"	230	**2949T46**	490.20

Metric Machined Alloy Steel

Dimensions, mm A	B	C	D	E	Thread Torque, kg.-m.		Each★
M8×1.25 Thread Size—400-kg. Work Load Limit							
13	68	47	11	10	1	**29495T41**	$53.86
M10×1.5 Thread Size—450-kg. Work Load Limit							
18	68	47	11	10	2	**29495T42**	53.86
M12×1.75 Thread Size—1,050-kg. Work Load Limit							
19	121	89	22	19	4	**29495T43**	65.58
M16×2 Thread Size—1,900-kg. Work Load Limit							
29	121	89	22	29	8	**29495T44**	67.67
M20×2.5 Thread Size—2,150-kg. Work Load Limit							
34	121	89	22	34	14	**29495T45**	68.76
M24×3 Thread Size—4,200-kg. Work Load Limit							
37	166	131	36	25	31	**29495T47**	165.36
M30×3.5 Thread Size—7,000-kg. Work Load Limit							
42	222	165	45	32	60	**29495T48**	289.98

Forged Steel

Dimensions A	B	C	D	E	Thread Torque, Ft.-lbs.		Each★
5/16"-18 Thread Size—800-lb. Work Load Limit							
0.56"	3.23"	2.29"	0.65"	0.44"	7	**2994T61**	$52.50
1.06"	3.23"	2.29"	0.65"	0.44"	7	**2994T62**	52.50
3/8"-16 Thread Size—1,000-lb. Work Load Limit							
0.56"	3.23"	2.29"	0.65"	0.44"	12	**2994T63**	52.50
1.06"	3.23"	2.29"	0.65"	0.44"	12	**2994T64**	52.50
1/2"-13 Thread Size—2,500-lb. Work Load Limit							
1"	5.31"	3.5"	1"	0.75"	28	**2994T65**	61.24
1.25"	5.31"	3.5"	1"	0.75"	28	**2994T66**	61.24
5/8"-11 Thread Size—4,000-lb. Work Load Limit							
1"	5.31"	3.5"	1"	0.75"	60	**2994T67**	63.60
1.25"	5.31"	3.5"	1"	0.75"	60	**2994T68**	63.60
3/4"-10 Thread Size—5,000-lb. Work Load Limit							
1"	5.31"	3.5"	1"	0.75"	100	**2994T69**	64.83
1.5"	5.31"	3.5"	1"	0.75"	100	**2994T71**	66.08
3/4"-10 Thread Size—7,000-lb. Work Load Limit							
1.2"	7"	5.1"	1.4"	1"	100	**2994T72**	124.67
1.45"	7"	5.1"	1.4"	1"	100	**2994T73**	126.78
7/8"-9 Thread Size—8,000-lb. Work Load Limit							
1.2"	7"	5.1"	1.4"	1"	160	**2994T74**	126.78
1"-8 Thread Size—10,000-lb. Work Load Limit							
1.2"	7"	5.1"	1.4"	1"	230	**2994T76**	129.27
1.45"	7"	5.1"	1.4"	1"	230	**2994T75**	129.33
2.2"	7"	5.1"	1.4"	1"	230	**2994T77**	131.53
1 1/4"-7 Thread Size—15,000-lb. Work Load Limit							
2.63"	9.22"	6.75"	2"	1.25"	470	**2994T81**	207.90
1 3/8"-6 Thread Size—20,000-lb. Work Load Limit							
2.63"	9.22"	6.75"	2"	1.25"	670	**2994T82**	222.48
1 1/2"-6 Thread Size—24,000-lb. Work Load Limit							
2.63"	9.22"	6.75"	2"	1.25"	800	**2994T83**	239.49

★ ***Prices are approximately 10% lower when you buy quantities of 5 or more.***

Warning! Never exceed work load limits of items on this page.

FERMILAB
ENGINEERING NOTE

SECTION	PROJECT	SERIAL-CATEGORY	PAGE
C-layer Pixel	D0 upgrade	Page 3.1	

SUBJECT: Structural Analysis – A/B/C layer lifting spreader Bar

NAME: E. CHI

DATE: 7/20/00

REVISION DATE

Ref. drawing:

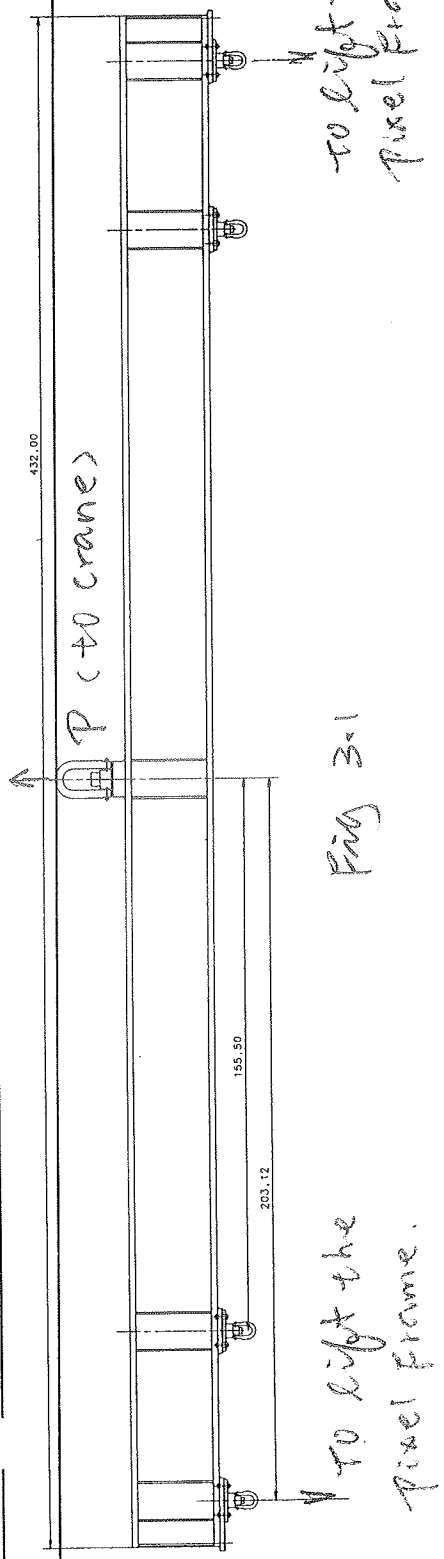

Fig 3.1

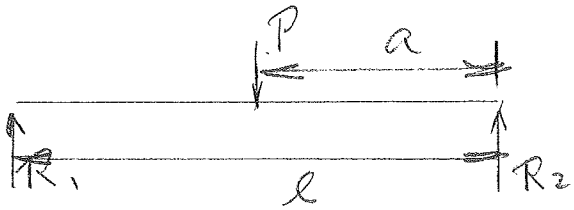

Fig 3.2

where

Fig 3.1 is the front view of the lifting spread Bar for Pixel frame A/B/C.

Fig 3.2 is the FBD for lifting Bar.

where for C-layer Pixel frame lifting Bar:

$$\ell_C = 203.12'' \times 2$$
$$= 406.25''$$

$$P_C = W_{sp-C} + W_{Pixel\ C}$$
$$= 5{,}900\# + 17{,}000\#$$
$$\cong 23{,}000\#$$

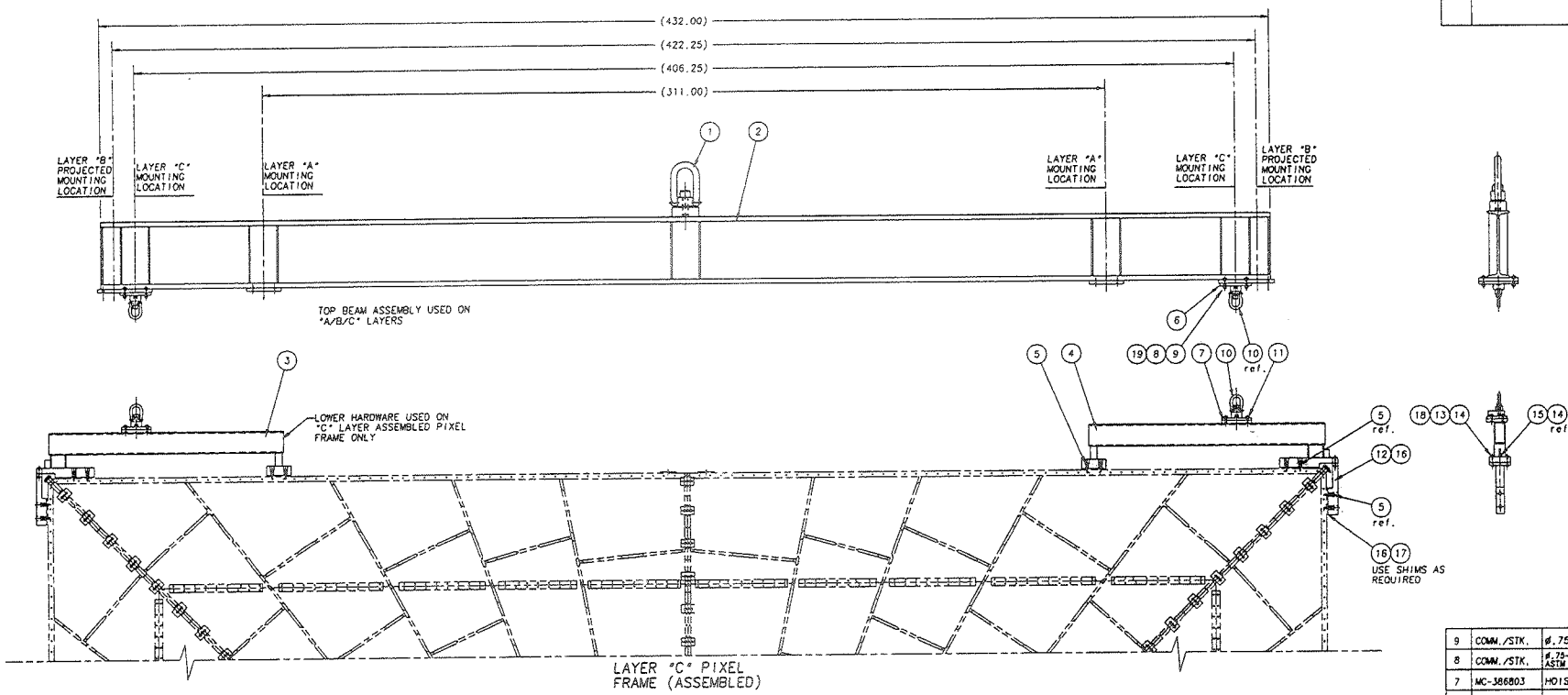

REV	DESCRIPTION	DRAWN / APPROVED	DATE / DATE

ITEM	PART NO.	DESCRIPTION OR SIZE	QTY.
19	COMM./STK.	ø.75-10 UNC-2B HEAVY HEX NUT ASTM A194 STL. ("McMASTER-CARR" #90521A245)	8
18	COMM./STK.	ø.50-13 UNC-2B HEAVY HEX NUT ASTM A194 STL. ("McMASTER-CARR" #90521A235)	4
17	MB-386120-2	SHIM	6
16	MB-386120-1	SHIM	6
15	COMM./STK.	ø.50-13 UNC-2A x 3.25" LG.GR.5 STL.H.H.C.S.	2
14	COMM./STK.	ø.50 STL. FLAT WASHER	6
13	COMM./STK.	ø.50-13 UNC-2A x 4" HEAVY H.H.BOLT ASTM A325 STL.("McMASTER-CARR" #91571A260)	4
12	MC-386804	LOWER FRAME EXTENSION ARM	2
11	COMM./STK.	ø.75-10 UNC-2A x 2.75" LG.GR.5 STL.H.H.C.S. ("McMASTER-CARR" #91247A846)	8
10		15,000 POUND LIFTING LOAD CAP. HOIST RING ("McMASTER-CARR" #3052T68) 1-1/4-7"SCREW SIZE	4
9	COMM./STK.	ø.75 STL. FLAT WASHER	16
8	COMM./STK.	ø.75-10 UNC-2A x 3.5" HEAVY H.H.BOLT ASTM A325 STL.("McMASTER-CARR" #91571A304)	8
7	MC-386803	HOIST RING MOUNTING PLATE	2
6	MC-386816	HOIST RING MOUNTING PLATE	2
5	COMM./STK.	ø.50-13 UNC-2A x 2.5" SELF LOCKING S.H.C.S. ("McMASTER-CARR" #91205A722)	12
4	MD-386801	FRAME EXTENSION WELDMENT, RIGHT	1
3	MD-386802	FRAME EXTENSION WELDMENT, LEFT	1
2	MD-386800	LIFTING SPREADER BAR WELDMENT	1
1		30,000 POUND LIFTING LOAD CAP. HOIST RING ("McMASTER-CARR" #3052T69) 2-4/12"SCREW SIZE	1

PARTS LIST

UNLESS OTHERWISE SPECIFIED	ORIGINATOR	ED CHI	07/14/00
DECIMAL TOLERANCES: .X=±.1 .XX=±.03 .XXX=±.010	DRAWN	K.POTTER	07/18/00
ANGULAR TOLERANCE: ±1°	CHECKED	ED CHI	08/01/00
	APPROVED	ED CHI	08/01/00

1) BREAK ALL SHARP EDGES .015 MAX.
2) DO NOT SCALE DRAWING.
3) DIMENSIONS BASED UPON ANSI Y14.5M-1982
4) MAX. ALL MACH. SURFACES 125

USED ON

MATERIAL: SEE PARTS LIST

FERMI NATIONAL ACCELERATOR LABORATORY
UNITED STATES DEPARTMENT OF ENERGY

PPD/MECHANICAL SUPPORT
LAYER A/B/C PIXEL FRAME ASSY.
LIFTING SPREADER BAR

SCALE	DRAWING NUMBER	SHEET	REV
.05	3823.130-MD-386074	1 OF 1	

CREATED WITH : MS2.1 GROUP: 00

Plotted by Spotter on 04-Aug-2000 . File. 38607401__.pff

6.5

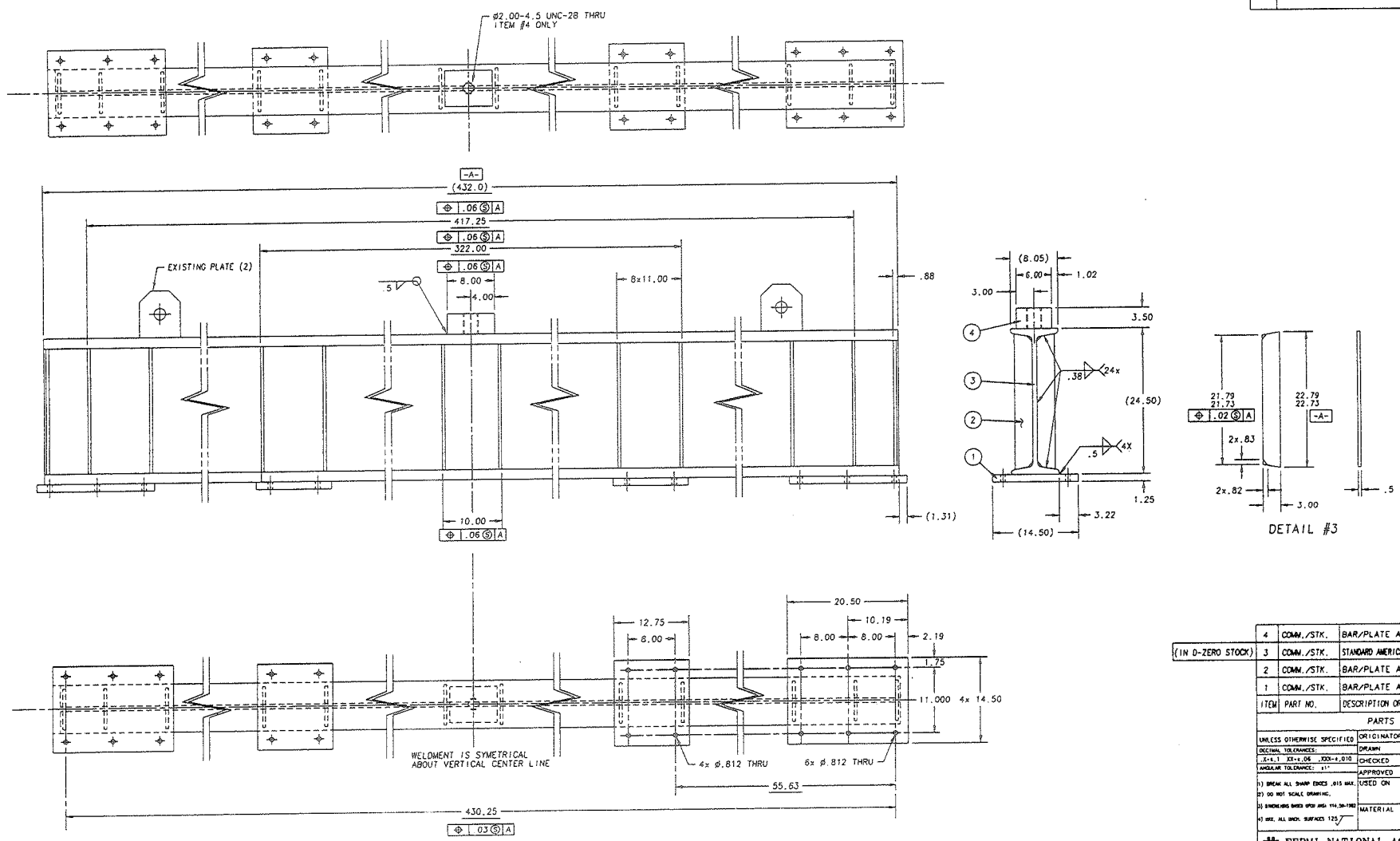

REV	DESCRIPTION	DRAWN / APPROVED	DATE / DATE

ITEM	PART NO.	DESCRIPTION OR SIZE	QTY.
4	COMM./STK.	BAR/PLATE ASTM A-36 H.R.S.	1
3	COMM./STK.	STANDARD AMERICAN BEAM S24x121 ASTM A-36 H.R.S.	1
2	COMM./STK.	BAR/PLATE ASTM A-36 H.R.S.	24
1	COMM./STK.	BAR/PLATE ASTM A-36 H.R.S.	4

(IN D-ZERO STOCK)

PARTS LIST

UNLESS OTHERWISE SPECIFIED	ORIGINATOR	ED CHI	07/14/00
DECIMAL TOLERANCES:	DRAWN	K.POTTER	07/18/00
.X=±.1 .XX=±.06 .XXX=±.010	CHECKED	ED CHI	07/18/00
ANGULAR TOLERANCE: ±1°	APPROVED	ED CHI	07/18/00
1) BREAK ALL SHARP EDGES .015 MAX. 2) DO NOT SCALE DRAWING. 3) DIMENSIONS BASED UPON ANSI Y14.5M-1982 4) MAX. ALL MACH. SURFACES 125	USED ON	MD-386074	
	MATERIAL	SEE PARTS LIST	

FERMI NATIONAL ACCELERATOR LABORATORY
UNITED STATES DEPARTMENT OF ENERGY

PPD/MECHANICAL SUPPORT
LAYER A/B/C PIXEL FRAME ASSY.
LIFTING SPREADER BAR WELDMENT

SCALE	DRAWING NUMBER	SHEET	REV
.125	3823.130-MD-386800	1 OF 1	

CREATED WITH MS2.1 GROUP: 00

NOTES:
- ALL WELDS TO CONFORM TO A.W.S. D1.1-2000
- ALL WELDING MATERIAL TO BE E70XX
- APPROMATE WEIGHT= 4950 POUNDS

Plotted by Spotter on 04-Aug-2000 , File: 38680001___.pff

6.6

REV	DESCRIPTION	APPROVED	DATE

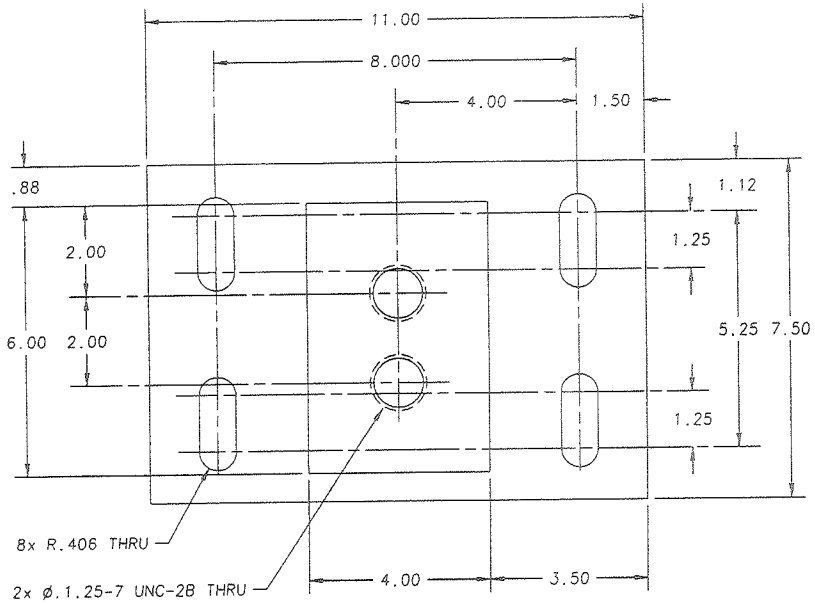

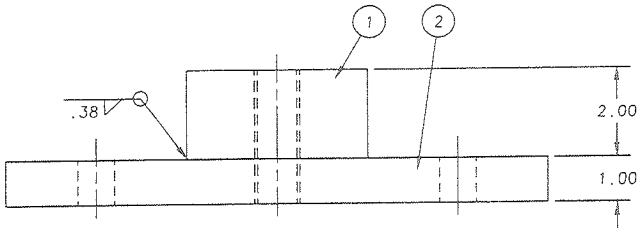

ITEM NO.	PART NO.	DESCRIPTION OR SIZE	QTY.
2	COMM./STK.	BAR/PLATE ASTM A-36	1
1	COMM./STK.	BAR/PLATE ASTM A-36	1

PARTS LIST

UNLESS OTHERWISE SPECIFIED	ORIGINATOR	ED CHI	07/14/00
DECIMAL TOLERANCES:	DRAWN	K.POTTER	07/18/00
.X=±.1 XX=±.03 .XXX=±.010	CHECKED	ED CHI	08/01/00
ANGULAR TOLERANCE: ±1°	APPROVED	ED CHI	08/01/00

1) BREAK ALL SHARP EDGES .015 MAX.
2) DO NOT SCALE DRAWING.
3) DIMENSIONS BASED UPON ANSI Y14.5M-1982
4) MAX. ALL MACH. SURFACES 125√

USED ON: MD-386074

MATERIAL: SEE PARTS LIST

FERMI NATIONAL ACCELERATOR LABORATORY
UNITED STATES DEPARTMENT OF ENERGY

PPD/MECHANICAL SUPPORT
LAYER C PIXEL FRAME ASSM.
HOIST MOUNTING PLATE

SCALE	DRAWING NUMBER	SHEET	REV
.5	3823.130-MC-386803	1 OF 1	

CREATED WITH: MS2.1 GROUP: DOMS

NOTES:
- ALL WELDS TO CONFORM TO A.W.S. D1.1-2000
- ALL WELDING MATERIAL TO BE E70XX
- APPROMATE WEIGHT= 30 POUNDS

6.7

Plotted by kpotter on 04-Aug-2000 . File: 38680301___.pff

REV	DESCRIPTION	DRAWN	DATE
		APPROVED	DATE

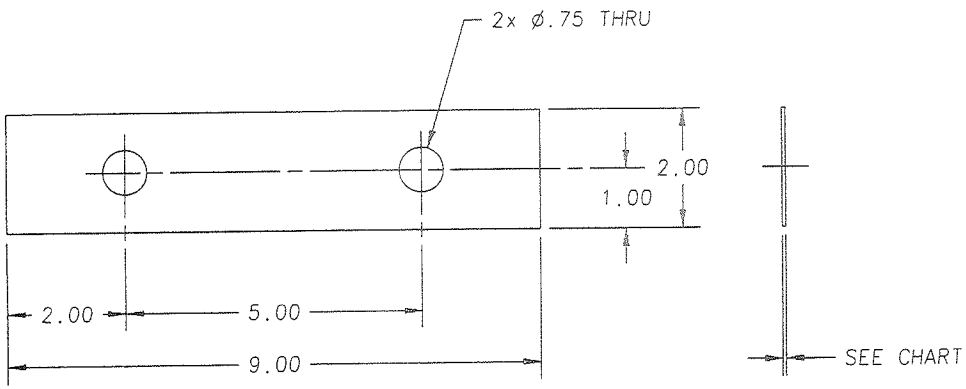

UNLESS OTHERWISE SPECIFIED	ORIGINATOR	ED CHI	07/20/00
DECIMAL TOLERANCES:	DRAWN	K.POTTER	07/20/00
.X=±.1 XX=±.03 .XXX=±.005	CHECKED	ED CHI	08/01/00
ANGULAR TOLERANCE: ±1°	APPROVED	ED CHI	08/01/00
1) BREAK ALL SHARP EDGES .015 MAX.	USED ON	MD-386074	
2) DO NOT SCALE DRAWING.			
3) DIMENSIONS BASED UPON ANSI Y14.5M-1982	MATERIAL	1018 MILD STEEL OR EQUAL	
4) MAX. ALL MACH. SURFACES 125 √			

FERMI NATIONAL ACCELERATOR LABORATORY
UNITED STATES DEPARTMENT OF ENERGY

PPD/MECHANICAL SUPPORT
LAYER C PIXEL FRAME ASSM.
SHIM

SCALE	DRAWING NUMBER	SHEET	REV
.5	3823.130-MB-386120	1 OF 1	

CREATED WITH : MS2.1 GROUP: DOMS

THICKNESS CHART:

386120-1=.03 THICK
386120-2=.06 THICK

Plotted by kpotter on 04-Aug-2000 . File: 38612001__.pff

6.8

REV	DESCRIPTION	APPROVED	DATE

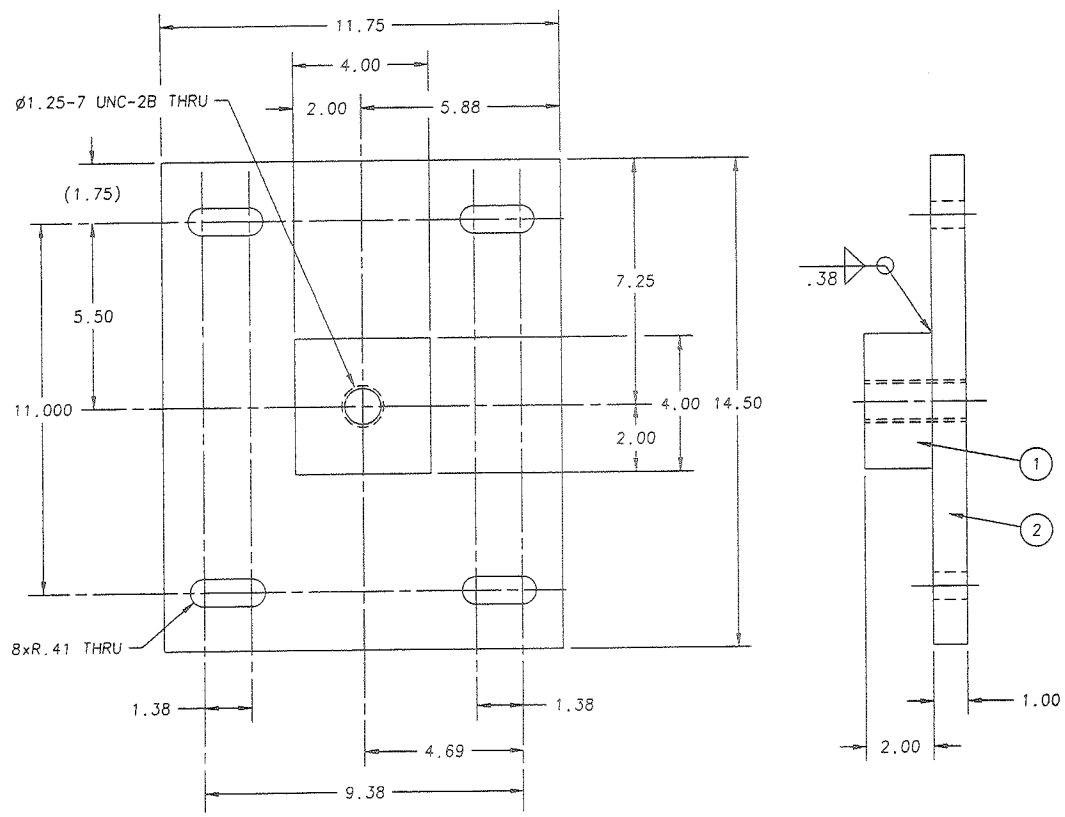

ITEM NO.	PART NO.	DESCRIPTION OR SIZE	QTY.
2	COMM./STK.	BAR/PLATE ASTM A-36 H.R.S.	1
1	COMM./STK.	BAR/PLATE ASTM A-36 H.R.S.	1

PARTS LIST

UNLESS OTHERWISE SPECIFIED	ORIGINATOR	ED CHI	07/14/00
DECIMAL TOLERANCES; .X=±.1 XX=±.03 .XXX=±.010	DRAWN	K.POTTER	07/18/00
ANGULAR TOLERANCE: ±1°	CHECKED	ED CHI	07/21/00
	APPROVED	ED CHI	07/21/00

1) BREAK ALL SHARP EDGES .015 MAX.
2) DO NOT SCALE DRAWING.
3) DIMENSIONS BASED UPON ANSI Y14.5M-1982
4) MAX. ALL MACH. SURFACES 125 √

USED ON: MD-386074

MATERIAL: SEE PARTS LIST

NOTES:
- ALL WELDS TO CONFORM TO A.W.S. D1.1-2000
- ALL WELDING MATERIAL TO BE E70XX
- APPROMATE WEIGHT= 52 POUNDS

FERMI NATIONAL ACCELERATOR LABORATORY
UNITED STATES DEPARTMENT OF ENERGY

PPD/MECHANICAL SUPPORT
LAYER A/B/C PIXEL FRAME ASSM.
HOIST RING MNTG. PLATE

SCALE	DRAWING NUMBER	SHEET	REV
.38	3823.130-MC-386816	1 OF 1	

CREATED WITH : MS2.1 GROUP: OOMS

6-9

Plotted by kpotter on 04-Aug-2000 , File 3868160i__ pff

REV	DESCRIPTION	APPROVED	DATE

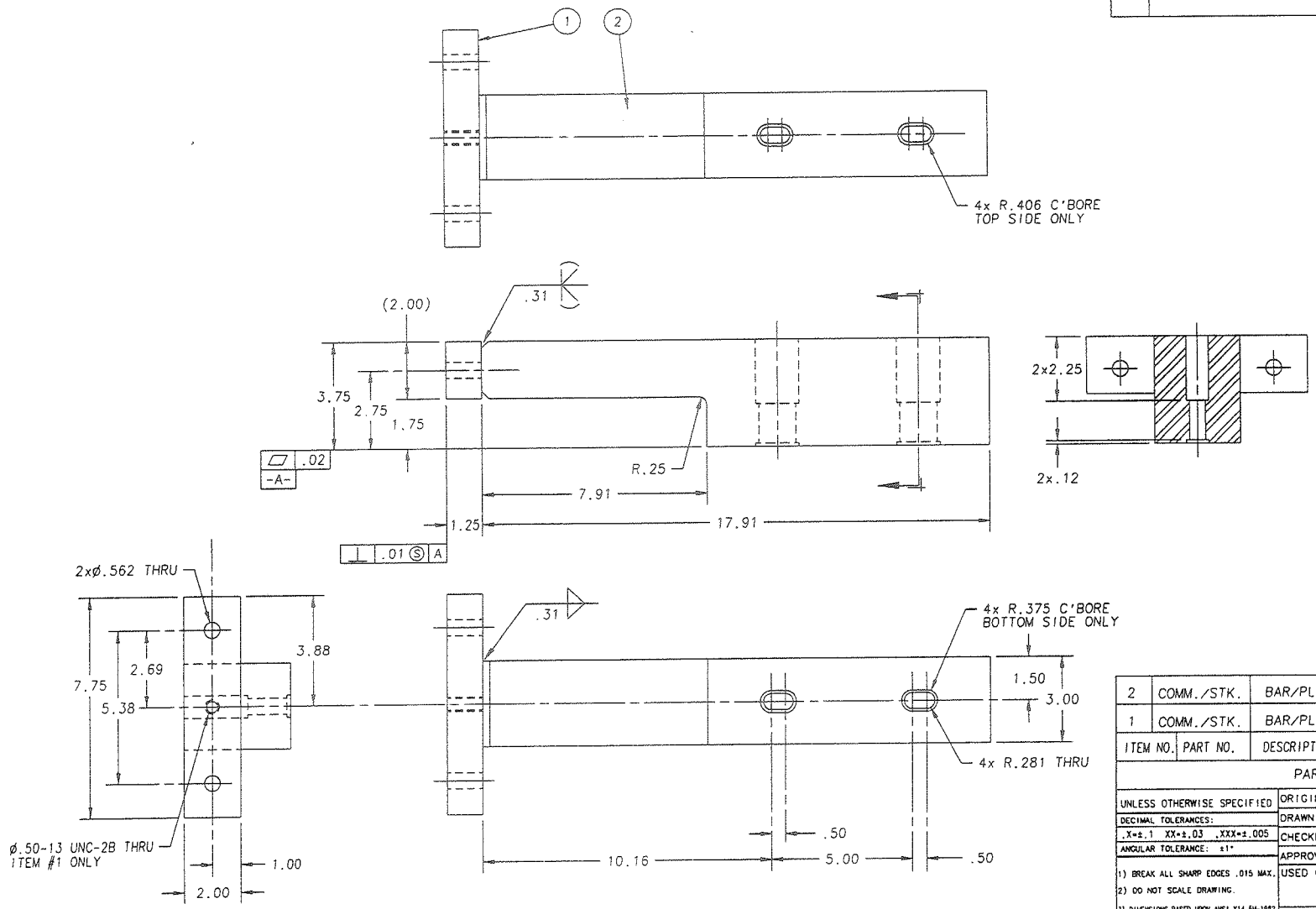

ITEM NO.	PART NO.	DESCRIPTION OR SIZE	QTY.
2	COMM./STK.	BAR/PLATE ASTM A-36 H.R.S.	1
1	COMM./STK.	BAR/PLATE ASTM A-36 H.R.S.	1

PARTS LIST

UNLESS OTHERWISE SPECIFIED	ORIGINATOR	ED CHI	07/14/00
DECIMAL TOLERANCES:	DRAWN	K.POTTER	07/20/00
.X=±.1 XX=±.03 .XXX=±.005	CHECKED	ED CHI	08/01/00
ANGULAR TOLERANCE: ±1°	APPROVED	ED CHI	08/01/00
1) BREAK ALL SHARP EDGES .015 MAX.	USED ON	MD-386074	
2) DO NOT SCALE DRAWING.			
3) DIMENSIONS BASED UPON ANSI Y14.5M-1982	MATERIAL	SEE PARTS LIST	
4) MAX. ALL MACH. SURFACES 125			

FERMI NATIONAL ACCELERATOR LABORATORY
UNITED STATES DEPARTMENT OF ENERGY

PPD/MECHANICAL SUPPORT
LAYER C PIXEL FRAME ASSM.
LOWER FRAME EXTENSION ARM

SCALE	DRAWING NUMBER	SHEET	REV
.375	3823.130-MC-386804	1 OF 1	

CREATED WITH MS2.1 GROUP DOMS

6.10

Plotted by kpotter on 04-Aug-2000 . File 38680401__.pff

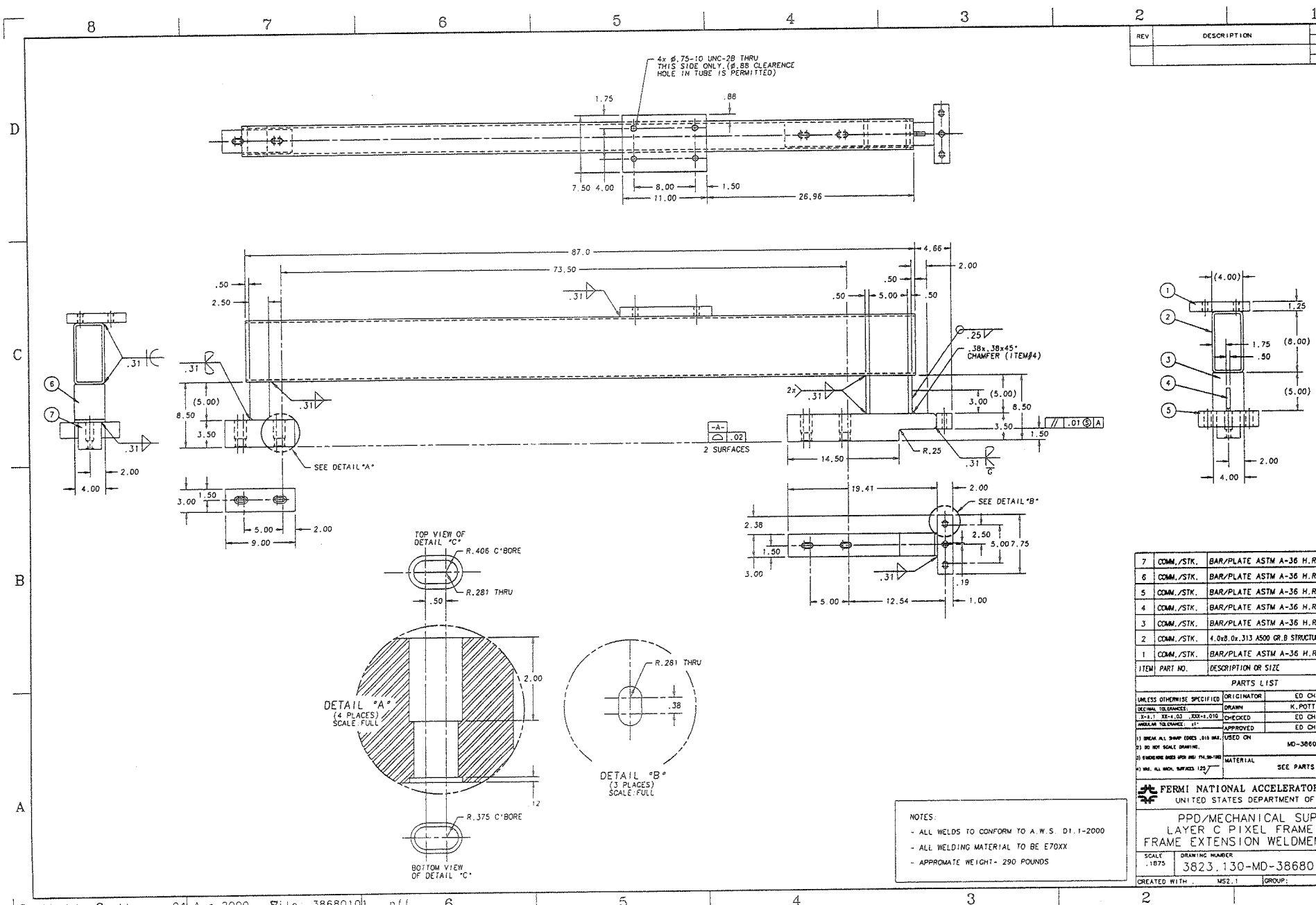

REV	DESCRIPTION	DRAWN / APPROVED	DATE / DATE

NOTES:
- ALL WELDS TO CONFORM TO A.W.S. D1.1-2000
- ALL WELDING MATERIAL TO BE E70XX
- APPROMATE WEIGHT- 290 POUNDS

ITEM	PART NO.	DESCRIPTION OR SIZE	QTY.
7	COMM./STK.	BAR/PLATE ASTM A-36 H.R.S.	1
6	COMM./STK.	BAR/PLATE ASTM A-36 H.R.S.	1
5	COMM./STK.	BAR/PLATE ASTM A-36 H.R.S.	1
4	COMM./STK.	BAR/PLATE ASTM A-36 H.R.S.	1
3	COMM./STK.	BAR/PLATE ASTM A-36 H.R.S.	2
2	COMM./STK.	4.0x8.0x.313 A500 GR.B STRUCTURAL STEEL TUBE	1
1	COMM./STK.	BAR/PLATE ASTM A-36 H.R.S.	1

PARTS LIST

UNLESS OTHERWISE SPECIFIED
DECIMAL TOLERANCES:
.X=±.1 .XX=±.03 .XXX=±.010
ANGULAR TOLERANCE: ±1°
1) BREAK ALL SHARP EDGES .015 MAX.
2) DO NOT SCALE DRAWING.
3) DIMENSIONS BASED UPON ANSI Y14.5M-1982
4) MAX. ALL MACH. SURFACES 125

ORIGINATOR	ED CHI	07/14/00
DRAWN	K.POTTER	07/20/00
CHECKED	ED CHI	08/01/00
APPROVED	ED CHI	08/01/00
USED ON	MD-386074	
MATERIAL	SEE PARTS LIST	

FERMI NATIONAL ACCELERATOR LABORATORY
UNITED STATES DEPARTMENT OF ENERGY

PPD/MECHANICAL SUPPORT
LAYER C PIXEL FRAME ASSM.
FRAME EXTENSION WELDMENT, RIGHT

SCALE	DRAWING NUMBER	SHEET	REV
.1875	3823.130-MD-386801	1 OF 1	

CREATED WITH . MS2.1 GROUP: D0

Plotted by potter on 04-Aug-2000 , File: 38680101__.pff

6.11

REV	DESCRIPTION	DRAWN / APPROVED	DATE / DATE

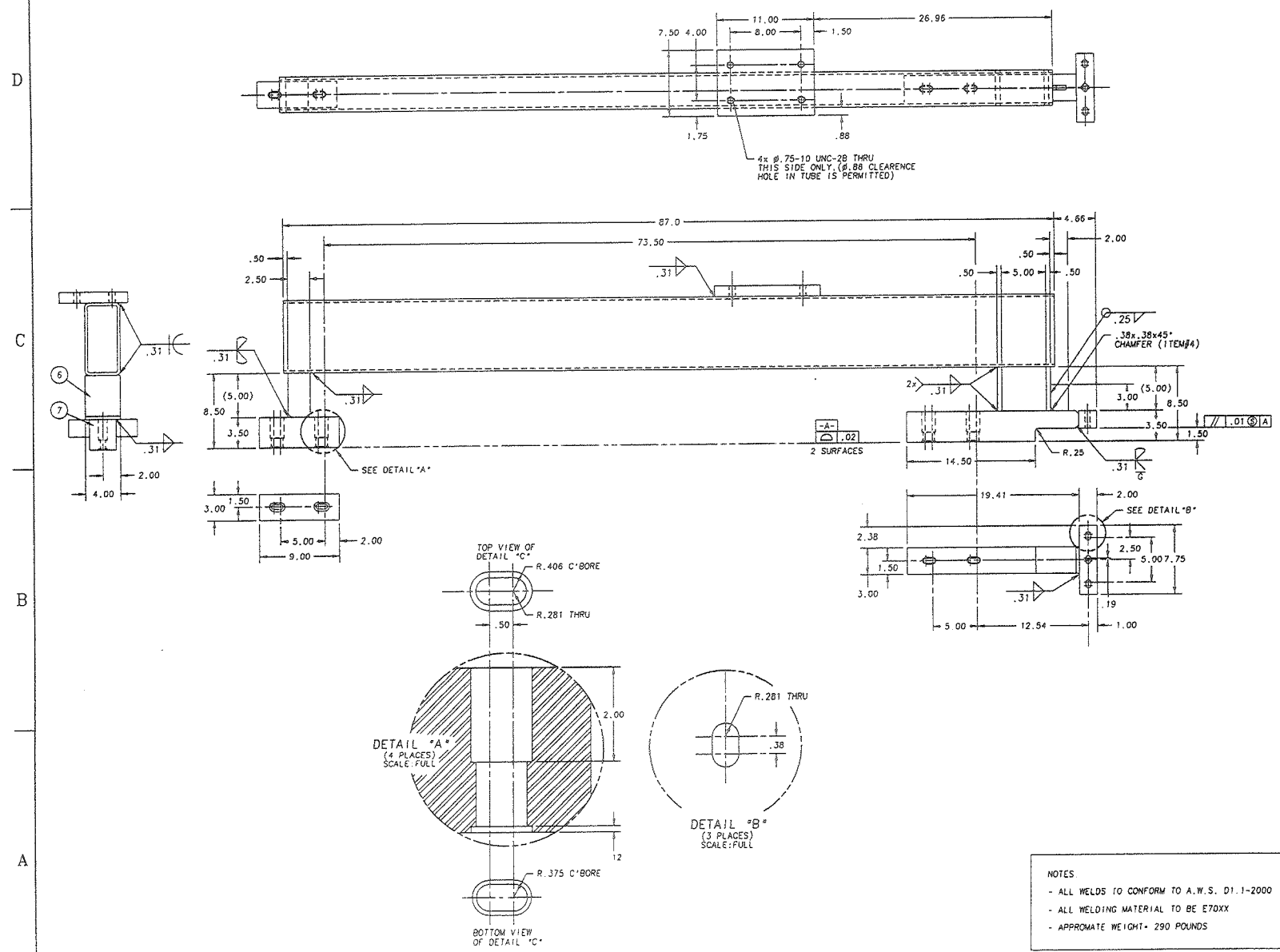

ITEM	PART NO.	DESCRIPTION OR SIZE	QTY.
7	COMM./STK.	BAR/PLATE ASTM A-36 H.R.S.	1
6	COMM./STK.	BAR/PLATE ASTM A-36 H.R.S.	1
5	COMM./STK.	BAR/PLATE ASTM A-36 H.R.S.	1
4	COMM./STK.	BAR/PLATE ASTM A-36 H.R.S.	1
3	COMM./STK.	BAR/PLATE ASTM A-36 H.R.S.	2
2	COMM./STK.	4.0x8.0x.313 A500 GR.B STRUCTURAL STEEL TUBE	1
1	COMM./STK.	BAR/PLATE ASTM A-36 H.R.S.	1

PARTS LIST

UNLESS OTHERWISE SPECIFIED DECIMAL TOLERANCES: .X=±.1 .XX=±.03 .XXX=±.010 ANGULAR TOLERANCE: ±1°	ORIGINATOR	ED CHI	07/14/00
	DRAWN	K.POTTER	07/20/00
	CHECKED	ED CHI	08/01/00
	APPROVED	ED CHI	08/01/00
1) BREAK ALL SHARP EDGES .015 MAX. 2) DO NOT SCALE DRAWING 3) ENGINEERING GRADE SPOT WELD TYP. ANSI Y14.3A-1982 4) UNL. ALL MACH. SURFACES 125√	USED ON	MD-386074	
	MATERIAL	SEE PARTS LIST	

FERMI NATIONAL ACCELERATOR LABORATORY
UNITED STATES DEPARTMENT OF ENERGY

PPD/MECHANICAL SUPPORT
LAYER C PIXEL FRAME ASSM.
FRAME EXTENSION WELDMENT, LEFT

SCALE	DRAWING NUMBER	SHEET	REV
.1875	3823.130-MD-386802	1 OF 1	

CREATED WITH MS2.1 GROUP: DO

NOTES:
- ALL WELDS TO CONFORM TO A.W.S. D1.1-2000
- ALL WELDING MATERIAL TO BE E70XX
- APPROMATE WEIGHT= 290 POUNDS

Plotted by potter on 04-Aug-2000 . File: 3868020 1 .pft

6.12

FERMILAB
ENGINEERING NOTE

SECTION	PROJECT	SERIAL-CATEGORY	PAGE
B/C layer Pixel Frame	D0 upgrade		1

SUBJECT	NAME	
Load Test Procedures - B/C Pixel Frame Lifting spreader BAR	E. CHI	
	DATE 8-30-00	REVISION DATE

Ref. drawing: MD-386074, MC-386803
MD-386801, MD-386800
MD-386802, MC-386816

Step 1. (The location for lifting C-layer Frame)
Install 2 Hoist Ring Mounting plates (see dwg. MC-386816) to the lifting spreader Bar Weldment (see dwg. MD-386800) with 8 HEAVY Duty HEX Head Bolt ($\frac{3}{4}$"-10, UNC-2A, ASTM A325 STL. or Equivalent Material) and Nuts, the steel Flat WASHER ($\frac{3}{4}$" DIA.) should be used on slot side.
The tight torque for bolt is about:

T=250 FT-lb

(tighting all bolts & Nuts uniformly)

* Install to the location FOR lifting C-layer Frame first. (Ref. dwg. MD-386074).

2. Install TWO $1\frac{1}{4}$"-7 Hoist Ring with work load limit 15,000 lbs to the Hoist Ring plates. Install one 2"-$4\frac{1}{2}$ Hoist Ring with work load limit 30,000 lbs to the CTR. of the lifting spreader Bar weldment per dwg.

MD-386074 and fig 1.1 of Page 3.
Tighting mounting screws of the Hoist Rings per stamped torque value and Procedures.

the distance between CTR. of 2"-4½ Hoist Ring to 1¼"-7 Hoist Ring for "C-layer Pixel Frame" is 203.125", the distance between two 1¼"-7 Hoist Ring CTR. is 406.25" (see dwg. MD-386074) for lifting C-layer Pixel Frame.

3. Lifting the spreader Bar with crane @ 2"-4½ Hoist Ring (see fig 1.1 of Page 3).
Applying loads P_{c1} & P_{c2} @ the location as indicated on fig 1.1 of Page 3.

where

$$P_{c1} = P_{c2} = 11,250 \text{ lb.}$$

the duration of loading:

~5 minutes.

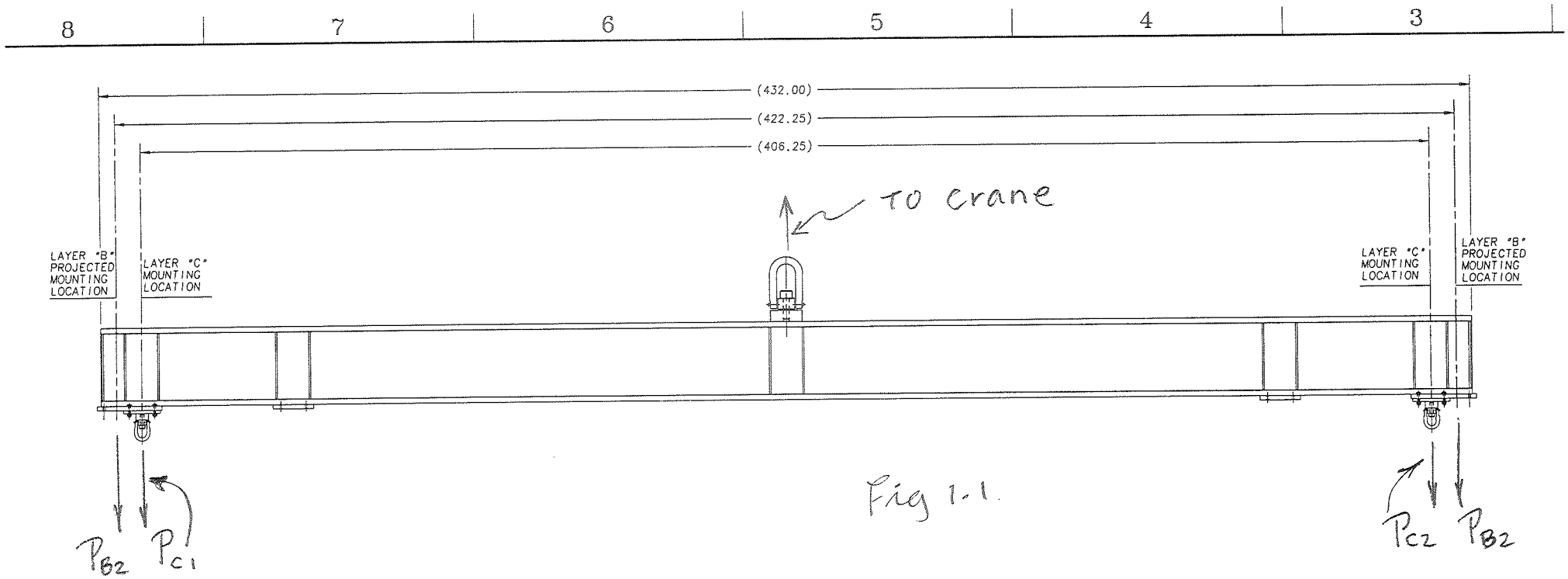

Fig 1.1.

Plotted by edchi on 30-Aug-00 , File: 386074a.pff

4. (The location for lifting B-layer Frame) The same procedures as step 1 & 2 of Page 1 & 2, Except that the 2 Hoist Ring mounting plates need to move to the location for lifting B-layer Pixel Frame as indicated on drawing MD-386074 and Fig 1.1 of Page 3. The distance between CTR. of 2"-4½ Hoist Ring to 1¼"-7 Hoist Ring for "B-layer Pixel Frame" is 211.125", the distance between Two 1¼"-7 Hoist Ring CTR. is about 422.25" (see dwg. MD-386074) for lifting B-layer Pixel Frame.

5. Lifting the spreader Bar with crane @ 2"-4½ Hoist Ring (see Fig 1.1 of Page 3 & MD-386074) Apply loads P_{B1} & P_{B2} @ the location on fig 1.1 of Page 3.

Where $P_{B1} = P_{B2} = 10,300$ lb

the duration of loading: ~5 minutes.

SUBJECT: Load Test Procedures - B/C Pixel Frame lifting spreader Bar

NAME: E. CHI

DATE: Aug. 30, 00 | REVISION DATE:

* <u>please be Noticed</u>:

$$P_{B_i} = 10,300 \text{ lb} < P_{C_i} = 11,250 \text{ lb}.$$

the span distance for lifting B-layer Pixel Frame is:

$$L_B = 422.25''$$

the span distance for lifting C-layer Pixel Frame is:

$$L_C = 406.25''$$

$$\therefore \quad L_B > L_C$$

FERMILAB ENGINEERING NOTE	SECTION	PROJECT D0 upgrade	SERIAL-CATEGORY	PAGE 6.
SUBJECT load Test Procedures for C-layer Pixel Frame lifting Hardares		NAME E. CHI		
		DATE 9-7-00	REVISION DATE 9-8-00	

Ref. drawings: MD-386074
MD-386801
MD-386802

Step 1.

Install Hoist mounting plates (per drawing MC-386803) to Frame Extension weldments (2) (per drawings MD-386801, MD-386802).

Install $1\frac{1}{4}$"-7 Hoist Ring with work load limit 15,000 lbs to each Hoist Ring plate.

The procedures, torque value should be the same as step 1 & 2 of page 1 & 2.

2.

Install Frame Extension weldment assemble to the floor or Heavy Block (each block weights more than 9,000#) as showing on fig 2.1 of page 7, anchored each Frame Extension weldment to the floor or Block table by seven $\frac{1}{2}$"-13, Grade 5 steel or equivalent Bolts (4 of them are socket Head cap screws, 3 of them are HEX HD. cap screws, see dwg. MD-386074)

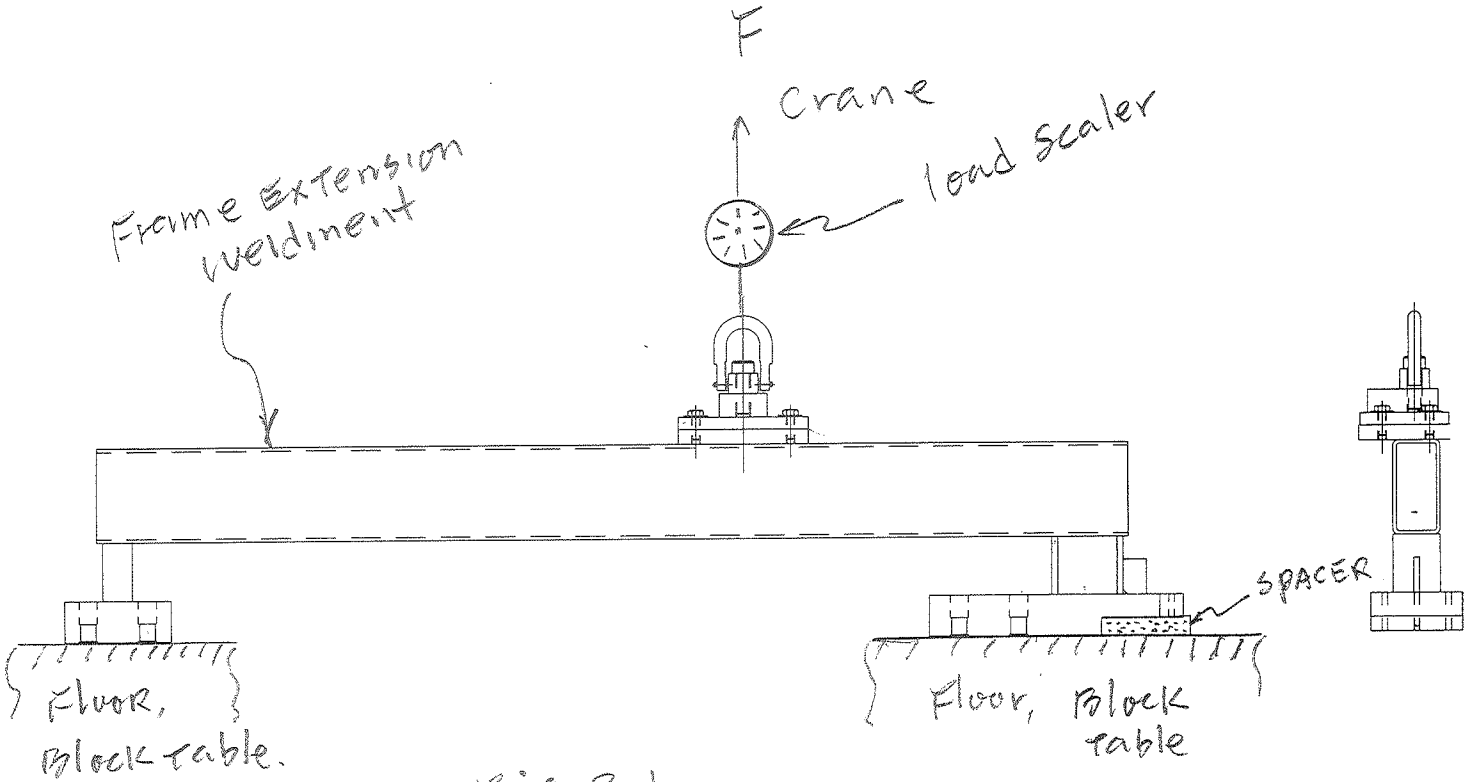

Fig 2-1

Note: 1. SPACER size
$1\frac{1}{2}'' \times 7'' \times 8''$
Steel plate

2. Block table:
mass weight W.
$W > 9{,}000\#$ (EACH)

Plotted by edchi on 08-Sep-00 . File: hardareC.pf1

the tight Torque for $\frac{1}{2}$"-13, Grade 5 Steel Bolt is

$$T_{\frac{1}{2}''} = 75 \text{ Ft-lb}$$

3. connecting one end of load scaler to the Hoist Ring, one end to the lifting crane, As showing in Fig 2-1 of Page 7. Gradually applying load F until the scaler Reached F = 11,025#, maintaining F = 11,025# for about 5 minutes.