BELOW-THE-HOOK LIFTING DEVICE
Engineering Note Cover Page

Lifting Device Numbers: 121

FNAL Site No.:_____ if applicable Div. Specific No.: _____ if applicable Asset No. _____ if applicable

ASME B30.20 Group: (check one)
- X Group I Structural and Mechanical Lifting Devices
- ˇ Group II Vacuum Lifting Devices
- ˇ Group III Magnets, Close Proximity Operated
- ˇ Group IV Magnets, Remote Operated

Device Name or Description: Spreader Bar - Clayer MDT installation

Device was: (check all applicable)
- ˇ Purchased from a Commercial Lifting Device Manufacturer
  mfg. name: _____
- X Designed and Built at Fermilab
- ˇ Designed by Fermilab and Built by a Vendor
  Assy drawing number: _____
- ˇ Provided by a User or Other Laboratory
- ˇ Other. Describe: _____

Engineering Note Prepared by: Tony Levand Date: 7/6/00

Engineering Note Reviewed by: [signature] Date: 8/29/00

Lifting Device Data:

Capacity: 2750 lb

Fixture Weight: 300 lb

Service: X normal ˇ heavy ˇ severe (refer to B30.20 for definitions)

Duty Cycle: NA 8, 16 or 24 hour rating (applicable to groups III, and IV)

Inspections Frequency: NA

Rated Load Test by FNAL (if applicable): Date: 9/1/2000 Load: 4100

ˇ Check if Load Test was by Vendor and attach the certificate.

Satisfactory Load Test Witnessed by: Tom Rathbun

Signature (of Load Test Witness): Tom Rathbun (751)

Notes or Special Information:

FERMILAB
ENGINEERING NOTE

SECTION	PROJECT	SERIAL-CATEGORY	PAGE
			1

SUBJECT: Installation Fixture
Clayer MDT OCTANTS

NAME: Tony Levand

DATE: 7/18/00

REVISION DATE:

SPREADER BAR:

DWG 336772

8 x 4 x .188 TUBE

S = 8.83

Astm A 500 tube

Fty = 42 KSI

Fa = $\frac{42}{3}$ = 14 KSI

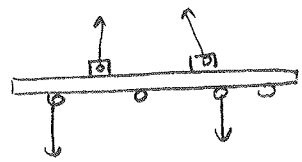

M allow = 14 x 8.83 = 123 Kip in

$P = \frac{4M}{L} = \frac{4 \times 123}{180} = 2733$ lbs

(FIXTURE LIMIT = 2750 lbs)

HOOKS:

DROP FORGED EYE McMaster 3024T26

WELD:

shoulder dia = 1.75

WELD Area = $1.75\pi \times \frac{.25}{\sqrt{2}} = .971 \text{ in}^2$

$P_{allow} = 14 \times 10^3 \times .971 = 13$ KIPS

EYE: MATERIAL: 1035 Tempered steel

Assume: Fty = 36 KSI
Fa = 12 KSI

Note: an equivalent ID threaded eye bolt is rated for 3500 working load

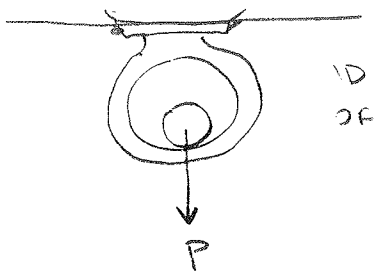

ID = 1.25
OF = 2.63

FERMILAB
ENGINEERING NOTE

SECTION	PROJECT	SERIAL-CATEGORY	PAGE
			2

SUBJECT: MDT C LAYER INSTALLATION SPREADER BAR

NAME: Tony Levand

DATE: 7/13/00

REVISION DATE:

DWG 330722 (rond)

-RING THICKNESS DIA = .69 in

Roark 6th ed P263 CASE 1

$$Max\ M = .3183\, W R K_2 \qquad R = \frac{R_o + R_i}{2} = \frac{1.25 + 2.63}{4} = .97$$

$$\alpha = \frac{I}{A R^2} = \frac{\frac{\pi D^4}{64}}{\frac{\pi D^2}{4} \times R^2} = \frac{D^2}{16 R^2} = \frac{.69^2}{16 \times .97^2} =$$

$$\alpha = .031$$

$$M_{max} = .3183 \times \frac{2733}{2} \times .97 \times .031 = 13.\ in\ lbs$$

$$f_b = \frac{Mc}{I} = \frac{13 \times \frac{.69}{2}}{\frac{.69^4}{64}\pi} = \underline{\underline{406\ psi}}$$

$$f_t = \frac{2733}{4 \times .69^2 \frac{\pi}{4}} = \underline{\underline{1.1\ ksi}}$$

$$K_2 = 1 - \alpha = .97$$

$$M_{min} = -(.5 - .3183 K_2) W R = -\left(.5 - .3183 \times .97\right) \times \frac{2733}{2} \times .97) =$$

$$= 234\ in\ lbs$$

$$f_b = \frac{234 \times \frac{.69}{2}}{\frac{.69^4}{64}\pi} = 7.2\ ksi$$

$$f_b + f_t = 7.2 + 1.1 = \underline{\underline{8.3\ ksi < 12\ ksi}}$$

PWG 386722 (CONT)

Roark & Young P 661 Art 13.3:

$$b = \frac{d}{D} = \frac{1.25}{2.63} = .475$$

$$\sigma = K \frac{2P}{\pi b} \qquad \frac{d}{b} = .475 \qquad K \simeq 10.1$$

$$\sigma = \frac{10.1 \times 2 \times \frac{2733}{2}}{\pi \times \frac{2.63}{2}} = 6.7 \text{ KSI} < 12 \text{ KSI}$$

UPPER LUGS:

$$P = \left[2733 + (19.2 \times 18)\right]\frac{\sqrt{2}}{2} = 2177 \text{ lbs}$$

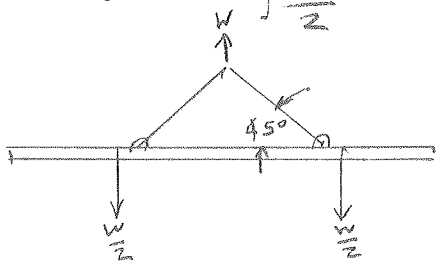

ASTM A-36:

$F_s = \frac{12}{2} = 6$ KSI

$F_a = 12$ KSI

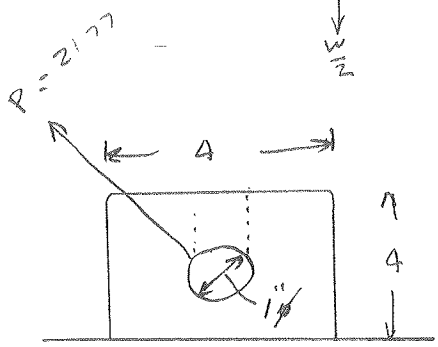

WELD:

$$f_s = \frac{2177}{8 \times \frac{.25}{\sqrt{2}}} \quad 1.5 \text{ KSI} < 6 \text{ KSI}$$

TEAROUT:

$$f_s = \frac{2177}{1.5 \times .5 \times 2} = 1.5 \text{ KSI}$$

Drop Forged Eyebolts

Galvanized Drop Forged Steel Eyebolts with Nuts

Industry stalwarts are durable and corrosion-resistant.
Units feature a hot galvanized finish. Threads are Unified Coarse Thread Class 2A.
See page 498 for load limit safety recommendations.

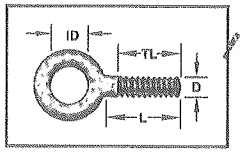

Plain

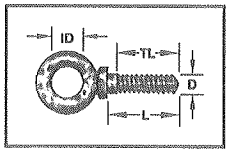

Shoulder

PLAIN PATTERN

Dia. D	Lg. L	Eye ID	Thread Lg. TL	Work Load Limit, Lbs.	No.	NET EACH
1/4"	2"	1/2"	1 1/2"	500	3016T14	$2.13
	3"	1/2"	1 1/2"	500	3016T15	2.30
	4"	1/2"	2"	500	3016T16	2.47
	5"	1/2"	2 1/2"	500	3016T17	3.56
	6"	1/2"	3"	500	3016T18	3.66
5/16"	2 1/4"	5/8"	1 1/2"	800	3016T23	$2.73
	3 1/4"	5/8"	1 1/2"	800	3016T24	2.87
	4 1/4"	5/8"	2 1/2"	800	3016T26	2.91
	5"	5/8"	2 1/2"	800	3016T27	3.91
	6"	5/8"	3"	800	3016T28	4.56
3/8"	2 1/2"	3/4"	1 1/2"	1200	3016T32	$2.79
	3"	3/4"	1 1/2"	1200	3016T33	3.29
	4"	3/4"	1 1/2"	1200	3016T34	3.58
	4 1/4"	3/4"	2"	1200	3016T35	3.68
	4 1/2"	3/4"	2 1/2"	1200	3016T76	4.57
	5"	3/4"	2 1/2"	1200	3016T36	4.09
	6"	3/4"	3"	1200	3016T37	4.31
	8"	3/4"	4"	1200	3016T38	5.90
1/2"	2"	1"	1 7/8"	2200	3016T39	$3.70
	3 1/4"	1"	1 1/2"	2200	3016T42	3.70
	4"	1"	2"	2200	3016T43	4.38
	4 1/2"	1"	2"	2200	3016T44	4.12
	6"	1"	3"	2200	3016T45	4.89
	8"	1"	4"	2200	3016T46	6.82
	10"	1"	4"	2200	3016T47	8.38
	12"	1"	4"	2200	3016T48	8.80
5/8"	4"	1 1/4"	2"	3500	3016T82	$6.86
	4 1/2"	1 1/4"	2"	3500	3016T52	5.95
	6"	1 1/4"	3"	3500	3016T53	7.29
	8"	1 1/4"	4"	3500	3016T54	10.83
	10"	1 1/4"	4"	3500	3016T55	11.88
	12"	1 1/4"	4"	3500	3016T56	12.44
	15"	1 1/4"	6"	3500	3016T57	15.97
	18"	1 1/4"	6"	3500	3016T58	19.06
	24"	1 1/4"	6"	3500	3016T59	27.04
3/4"	4 1/2"	1 1/2"	2 1/2"	5200	3016T62	$9.16
	6"	1 1/2"	3"	5200	3016T63	10.43
	8"	1 1/2"	4"	5200	3016T64	14.89
	10"	1 1/2"	4"	5200	3016T65	16.10
	12"	1 1/2"	4"	5200	3016T66	16.53
	15"	1 1/2"	6"	5200	3016T67	17.76
	18"	1 1/2"	6"	5200	3016T68	28.89

PLAIN PATTERN

Dia. D	Lg. L	Eye ID	Thread Lg. TL	Work Load Limit, Lbs.	No.	NET EACH
7/8"	5"	1 3/4"	2 1/2"	7000	3016T71	$14.72
	8"	1 3/4"	4"	7000	3016T72	18.20
	12"	1 3/4"	4"	7000	3016T73	22.54
	18"	1 3/4"	6"	7000	3016T74	35.41
	24"	1 3/4"	6"	7000	3016T75	47.11
1"	6"	2"	3"	9800	3016T84	$19.75
	9"	2"	4"	9800	3016T85	24.32
	12"	2"	4"	9800	3016T87	28.44
	18"	2"	6"	9800	3016T88	33.43
	24"	2"	6"	9800	3016T83	51.95
1 1/4"	6"	2 3/16"	5"	13,560	3016T89	$49.38
	8"	2 3/16"	5"	13,560	3016T91	51.64
	12"	2 3/16"	4"	13,560	3016T92	55.00

SHOULDER PATTERN

Dia. D	Lg. L	Eye ID	Thread Lg. TL	Work Load Limit, Lbs.	No.	NET EACH
1/4"	2"	1/2"	1 1/2"	500	3018T14	$1.95
	4"	1/2"	2"	500	3018T34	2.24
5/16"	2 1/4"	5/8"	1 1/2"	800	3018T15	$2.34
	4 1/4"	5/8"	2 1/2"	800	3018T35	2.52
3/8"	2 1/2"	3/4"	1 1/2"	1200	3018T16	$2.58
	4 1/4"	3/4"	2"	1200	3018T36	3.07
	4 1/2"	3/4"	2 1/2	1200	3018T83	3.24
1/2"	2"	1"	1 7/8"	2200	3018T44	$3.86
	3 1/4"	1"	1 1/2"	2200	3018T17	4.12
	6"	1"	3"	2200	3018T37	5.36
5/8"	4"	1 1/4"	2"	3500	3018T18	$6.21
	4 1/2"	1 1/4"	2"	3500	3018T43	6.48
	6"	1 1/4"	3"	3500	3018T38	7.60
3/4"	4 1/2"	1 1/2"	2 1/2"	5200	3018T19	$8.76
	6"	1 1/2"	3"	5200	3018T39	10.43
7/8"	5"	1 3/4"	2 1/2"	7000	3018T21	$14.42
	8"	1 3/4"	4"	7000	3018T41	16.57
1"	6"	2"	3"	9800	3018T22	$16.98
	9"	2"	4"	9800	3018T42	21.24
1 1/4"	8"	2 1/2"	4"	15,200	3018T81	$44.41
	12"	2 1/2"	4"	15,200	3018T82	49.43

Drop Forged Alloy Steel Eyebolts

Commonly referred to as machinery eyebolts. Made of fine grain, 8620-8640 alloy steel. Ideal in temperatures of 0° and below. Threads are Unified Coarse Thread Class 2A. Eyebolts meet ASTM specification F541.

Sizes up to 2" are also available. **Prices on request. Specify No. 3049T999 for plain, and No. 3077T999 for shoulder.**

Thread Dia.	Shank Lg.	Eye ID	Work Load Limit, Lbs.	PLAIN No.	PLAIN NET EACH	SHOULDER No.	SHOULDER NET EACH
3/8"	1 1/4"	1"	1500	3049T81	$7.80	3077T91	$7.80
1/2"	1 1/2"	1 3/16"	2700	3049T82	9.84	3077T92	9.84
5/8"	1 3/4"	1 3/8"	4300	3049T83	11.92	3077T93	11.92
3/4"	2"	1 1/2"	6400	3049T84	14.86	3077T94	14.86
7/8"	2 1/4"	1 5/8"	8800	3049T85	19.86	3077T95	19.86
1"	2 1/2"	1 3/4"	11,600	3049T86	27.28	3077T96	27.93

Plain

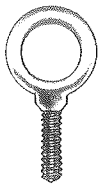

Shoulder

Drop Forged Pad Eyes

Use for welding onto a variety of machinery, equipment, and vehicles . . . great for material handling.

Available in forged, tempered 1035 carbon steel and type 316 polished stainless steel.

Eye ID	Eye OD	Shoulder Dia.	Overall Ht.	No.	NET EACH 1-47	NET EACH 48-Up
CARBON STEEL						
1/4"	5/8"	5/8"	3/4"	3024T14	$0.91	$0.83
3/8"	7/8"	7/8"	1 1/32"	3024T16	.97	.88
5/8"	1 1/8"	1"	1 5/16"	3024T18	1.32	1.21
3/4"	1 1/2"	1 1/16"	1 5/8"	3024T22	1.41	1.29
1 3/16"	2 1/16"	1 1/16"	2 3/8"	3024T24	2.41	2.20
1 1/4"	2 5/8"	1 3/4"	2 3/4"	3024T26	4.20	3.84

Eye ID	Eye OD	Shoulder Dia.	Overall Ht.	No.	NET EACH 1-11	NET EACH 12-Up
316 STAINLESS STEEL						
1/2"	7/8"	7/16"	1 1/16"	8892T9	$8.78	$7.77
5/8"	1 1/8"	9/16"	1 5/16"	8892T11	13.22	10.71
3/4"	1 3/8"	21/32"	1 9/16"	8892T12	15.25	13.11
1"	1 3/4"	7/8"	2"	8892T14	18.83	16.20
1 1/4"	2 1/4"	1 3/32"	2 1/2"	8892T16	28.11	24.17
1 1/2"	2 3/4"	1 3/8"	3"	8892T18	39.82	34.23

DO NOT EXCEED WORK LOAD LIMIT

TABLE 17 Formulas for circular rings

NOTATION: W = load (force); w and v = unit loads (force per unit of circumferential length); ρ = unit weight of contained liquid (force per unit volume); M_o = applied couple (force-length). M_A, M_B, M_C, and M are internal moments at A, B, C, and x, respectively, positive as shown. N_A, N, V_A, and V are internal forces, positive as shown. E = modulus of elasticity (force per unit area); ν = Poisson's ratio; A = cross-sectional area (length squared); R = radius to the centroid of the cross section (length); I = area moment of inertia of ring cross section about the principal axis perpendicular to the plane of the ring (length^4). [Note that for a pipe or cylinder, a representative segment of unit axial length may be used by replacing EI by $Et^3/12(1-\nu^2)$.] h = positive distance measured radially inward from the centroidal axis of the cross section to the neutral axis of pure bending (see Art. 8.1). θ, x, and ϕ are angles (radians) and are limited to the range zero to π for all cases except 18 and 19; $s = \sin\theta$, $c = \cos\theta$, $z = \sin x$, $u = \cos x$, $n = \sin\phi$, and $e = \cos\phi$.

D_V and D_H are changes in the vertical and horizontal diameters, respectively, and an increase is positive. ΔL is the change in the lower half of the vertical diameter or the vertical motion relative to point C of a line connecting points B and D on the ring. Similarly ΔL_W is the vertical motion relative to point C of a horizontal line connecting the load points on the ring. D_{WH} is the change in length of a horizontal line connecting the load points on the ring. ψ is the angular rotation (radians) of the load point in the plane of the ring and is positive in the direction of positive θ. For the distributed loadings the load points just referred to are the points where the distributed loading starts, i.e., the position located by the angle θ. The reference to points A, B, and C and to the diameters refer to positions on a circle of radius R passing through the centroids of the several sections; i.e., diameter = $2R$. It is important to consider this when dealing with thick rings. Similarly, all concentrated and distributed loadings are assumed to be applied at the radial position of the centroid with the exception of the cases where the ring is loaded by its own weight or by dynamic loading, cases 15 and 21. In these two cases the actual radial distribution of load is considered. If the loading is on the outer or inner surfaces of thick rings, an equivalent loading at the centroidal radius R must be used. See the examples to determine how this might be accomplished.

The hoop-stress deformation factor is $\alpha = I/AR^2$ for thin rings or $\alpha = h/R$ for thick rings. The transverse (radial) shear deformation factor is $\beta = FEI/GAR^2$ for thin rings or $\beta = 2F(1+\nu)h/R$ for thick rings, where G is the shear modulus of elasticity and F is a shape factor for the cross section (see Art. 7.10). The following constants are defined to simplify the expressions which follow. Note that these constants are unity if no correction for hoop stress or shear stress is necessary or desired for use with thin rings. $k_1 = 1 - \alpha + \beta$, $k_2 = 1 - \alpha$.

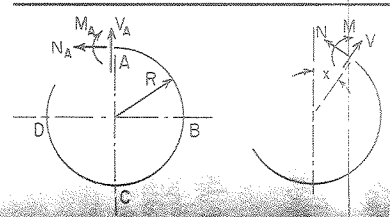

General formulas for moment, hoop load, and radial shear

$$M = M_A - N_A R(1-u) + V_A R z + LT_M$$
$$N = N_A u + V_A z + LT_N$$
$$V = -N_A z + V_A u + LT_V$$

where LT_M, LT_N, and LT_V are load terms given below for several types of load

Note: Due to symmetry in most of the cases presented, the loads beyond 180° are not included in the load terms. Only for cases 16, 17, and 19 should the equations for M, N, and V be used beyond 180°.

Note: The use of the bracket $\langle x - \theta \rangle^n$ is explained on page 98 and has a value of zero unless $x > \theta$.

1.

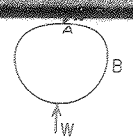

$$LT_M = \frac{-WRz}{2} \qquad LT_N = \frac{-Wz}{2}$$

$$LT_V = \frac{-Wu}{2}$$

$$M_A = \frac{-WR}{\pi}$$

$$N_A = 0$$

$$V_A = 0$$

$$D_H = \frac{WR^3}{EI}\left(\frac{k_1}{2} - k_2 + \frac{2k_2^2}{\pi}\right)$$

$$D_V = \frac{-WR^3}{EI}\left(\frac{\pi k_1}{4} - \frac{2k_2^2}{\pi}\right)$$

$$\text{Max } +M = M_A = 0.3183WRk_2$$
$$\text{Max } -M = M_B = -(0.5 - 0.3183k_2)WR$$

If $\alpha = \beta = 0$,

$$D_H = 0.1366\frac{WR^3}{EI} \quad \text{and} \quad D_V = -0.1488\frac{WR^3}{EI}$$

Note: For concentrated loads on thick-walled rings, study the material in Art. 13.3 on hollow pins and rollers. Radial stresses under the concentrated loads have a significant effect not considered here.

2.

$$M_A = \frac{-WR}{\pi}[(\pi - \theta)(1 - c) - s(k_2 - c)]$$

$$M_C = \frac{-WR}{\pi}[\theta(1 + c) - s(k_2 + c)]$$

$$\text{Max } +M = \frac{WRs(k_2 - c^2)}{\pi} \quad \text{at } x = \theta$$

$$\{M = \quad \text{if } \theta \le \frac{\pi}{}$$

The hoop-stress deformation factor is $\alpha = I/AR^2$ for thin rings or $\alpha = h/R$ for thick rings. The transverse (radial) shear deformation factor is $\beta = FEI/GAR^2$ for thin rings or $\beta = 2F(1+\nu)h/R$ for thick rings, where G is the shear modu[illegible] elasticity and F is a shape factor for the cross section (see [illegible] 7.10). The following constants are defined to simplify the expressions whic[illegible] low. Note that these constants are unity if no correction fo[illegible] oop stress or shear stress is necessary or desired for use with thin rings. $k_1 = 1 - \alpha + \beta$, $k_2 = 1 - \alpha$.

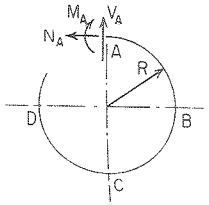

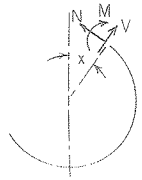

General formulas for moment, hoop load, and radial shear

$$M = M_A - N_A R(1-u) + V_A R z + LT_M$$
$$N = N_A u + V_A z + LT_N$$
$$V = -N_A z + V_A u + LT_V$$

where LT_M, LT_N, and LT_V are load terms given below for several types of load

Note: Due to symmetry in most of the cases presented, the loads beyond 180° are not included in the load terms. Only for cases 16, 17, and 19 should the equations for M, N, and V be used beyond 180°.

Note: The use of the bracket $\langle x-\theta\rangle^0$ is explained on page 98 and has a value of zero unless $x > \theta$

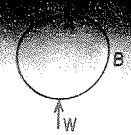

$$LT_M = \frac{-WRz}{2} \qquad LT_N = \frac{-Wz}{2}$$

$$LT_v = \frac{-Wu}{2}$$

$N_A = 0$
$V_A = 0$

$$D_H = \frac{WR^3}{EI}\left(\frac{k_1}{2} - k_2 + \frac{2k_2^2}{\pi}\right)$$

$$D_V = \frac{-WR^3}{EI}\left(\frac{\pi k_1}{4} - \frac{2k_2^2}{\pi}\right)$$

If $\alpha = \beta = 0$,

$$D_H = 0.1366\frac{WR^3}{EI} \quad \text{and} \quad D_V = -0.1488\frac{WR^3}{EI}$$

Note: For concentrated loads on thick-walled rings, study the material in Art. 13.3 on hollow pins and rollers. Radial stresses under the concentrated loads have a significant effect not considered here.

2.

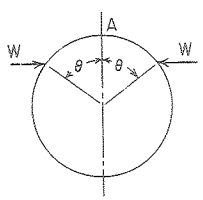

$$LT_M = -WR(c-u)\langle x-\theta\rangle^0$$
$$LT_N = Wu\langle x-\theta\rangle^0$$
$$LT_V = -Wz\langle x-\theta\rangle^0$$

$$M_A = \frac{-WR}{\pi}[(\pi-\theta)(1-c) - s(k_2 - c)]$$

$$M_C = \frac{-WR}{\pi}[\theta(1+c) - s(k_2 + c)]$$

$$N_A = \frac{-W}{\pi}[\pi - \theta + sc]$$

$$V_A = 0$$

$$D_H = \begin{cases} \dfrac{-WR^3}{EI\pi}[0.5\pi k_1(\theta - sc) + 2k_2\theta c - 2k_2^2 s] & \text{if } \theta \le \dfrac{\pi}{2} \\ \dfrac{-WR^3}{EI\pi}[0.5\pi k_1(\pi - \theta + sc) - 2k_2(\pi - \theta)c - 2k_2^2 s] & \text{if } \theta \ge \dfrac{\pi}{2} \end{cases}$$

$$D_V = \frac{WR^3}{EI}\left[\frac{k_1 s^2}{2} - k_2\left(1 - c + \frac{2\theta c}{\pi}\right) + \frac{2k_2^2 s}{\pi}\right]$$

$$\Delta L = \begin{cases} \dfrac{WR^3}{EI}\left[\dfrac{\theta c}{2} + \dfrac{k_1(\theta - sc)}{2\pi} - k_2\left(\dfrac{\theta c}{\pi} + \dfrac{s}{2}\right) + \dfrac{k_2^2 s}{\pi}\right] & \text{if } \theta \le \pi/2 \\ \dfrac{WR^3}{EI}\left[\dfrac{(\pi-\theta)c}{2} + \dfrac{k_1(\theta - sc - \pi c^2)}{2\pi} - k_2\left(1 + \dfrac{\theta c}{\pi} - \dfrac{s}{2}\right) + k_2^2 s/\pi\right] & \text{if } \theta \ge \pi/2 \end{cases}$$

$$\Delta L_W = \frac{WR^3}{EI\pi}[(\pi-\theta)\theta sc + 0.5k_1 s^2(\theta - sc) + k_2(2\theta s^2 - \pi s^2 - \theta c - \theta) + k_2^2 s(1+c)]$$

$$D_{WH} = \frac{-WR^3}{EI\pi}[(\pi-\theta)2\theta c^2 - k_1(\pi sc + s^2c^2 - 2\theta sc - \pi\theta + \theta^2) - 2k_2 sc(\pi - 2\theta) - 2k_2^2 s^2]$$

$$\Delta\psi = \frac{-WR^2}{EI\pi}[(\pi-\theta)\theta c - k_2 s(sc + \pi - 2\theta)]$$

$$\text{Max } +M = \frac{WRs(k_2 - c^2)}{\pi} \quad \text{at } x = \theta$$

$$\text{Max } -M = \begin{cases} M_A & \text{if } \theta \le \dfrac{\pi}{2} \\ M_C & \text{if } \theta \ge \dfrac{\pi}{2} \end{cases}$$

If $\alpha = \beta = 0$, $M = K_M WR$, $N = K_N W$, $D = K_D WR^3/EI$, $\Delta\psi = K_{\Delta\psi} WR^2/EI$, etc.

θ	30°	45°	60°
K_{M_A}	−0.0903	−0.1538	−0.1955
K_{M_θ}	0.0398	0.1125	0.2068
K_{N_A}	−0.9712	−0.9092	−0.8045
K_{D_H}	−0.0157	−0.0461	−0.0891
K_{D_V}	0.0207	0.0537	0.0930
$K_{\Delta L}$	0.0060	0.0179	0.0355
$K_{\Delta L_W}$	0.0119	0.0247	0.0391
$K_{D_{WH}}$	−0.0060	−0.0302	−0.0770
$K_{\Delta\psi}$	0.0244	0.0496	0.0590

FERMILAB
ENGINEERING NOTE

SECTION	PROJECT	SERIAL-CATEGORY	PAGE

SUBJECT: LOAD TEST

NAME: T. LEVAND

DATE: 3/29/00

REVISION DATE:

DWG 386772

LOAD TEST - C LAYER MDT OCTANT INSTALLATION

SPREADER BAR

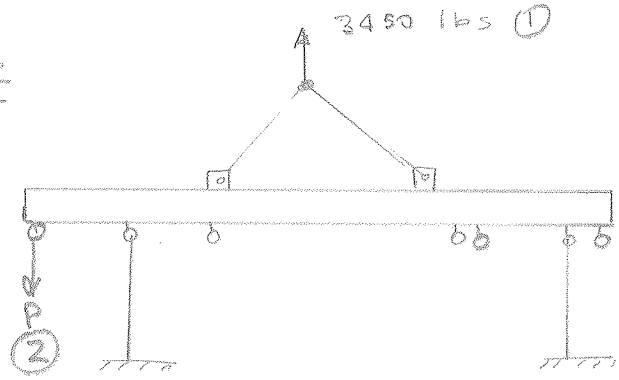

(1) LOAD TEST THE SPREADER BAR TO 3450 lbs
REPEAT WITH SECOND SET OF EYES.

(2) LOAD EACH OF THE OTHER EYES TO 1725 lbs

REV	DESCRIPTION	DRAWN	DATE
		APPROVED	DATE

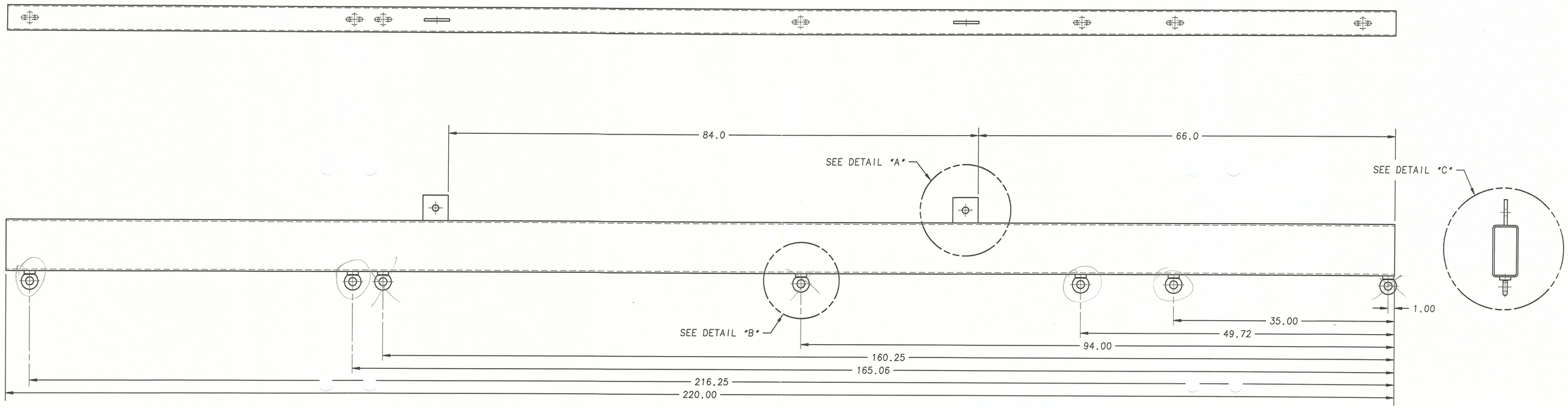

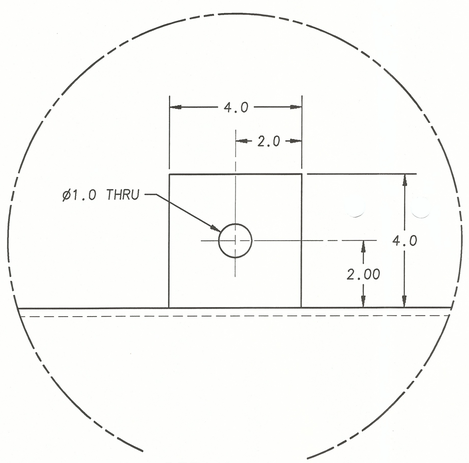

DETAIL "A"
SCALE .5

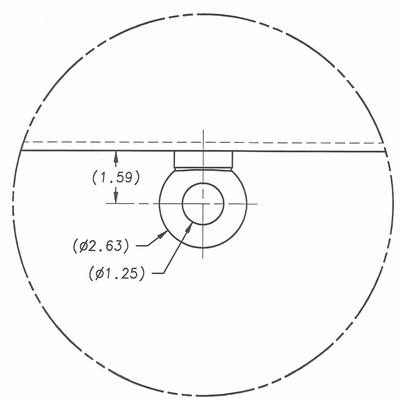

DETAIL "B"
SCALE .5

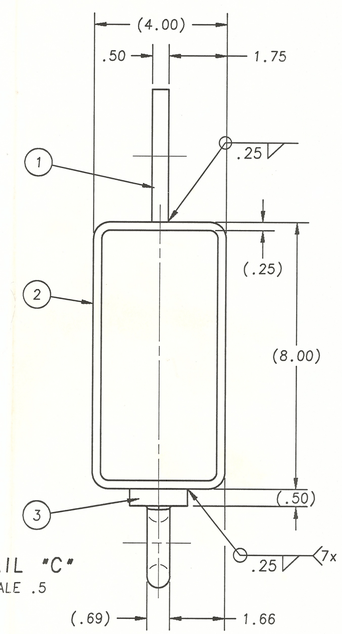

DETAIL "C"
SCALE .5

ITEM	PART NO.	DESCRIPTION OR SIZE	QTY.
3	3024T26	"McMASTER-CARR" DROP FORGED EYE	7
2	COMM./STK.	4.0x8.0x.25 A500 GR.B STRUCTURAL STEEL TUBE	1
1	COMM./STK.	BAR/PLATE ASTM A-36 H.R.S.	2

PARTS LIST

UNLESS OTHERWISE SPECIFIED	ORIGINATOR	TONY LEVAND	07/10/00
DECIMAL TOLERANCES: .X=±.1 XX=±.03 .XXX=±.005	DRAWN	K.POTTER	07/10/00
ANGULAR TOLERANCE: ±1°	CHECKED		
	APPROVED		
1) BREAK ALL SHARP EDGES .015 MAX. 2) DO NOT SCALE DRAWING. 3) DIMENSIONS BASED UPON ANSI Y14.5M-1982 4) MAX. ALL MACH. SURFACES 125	USED ON		
	MATERIAL	SEE PARTS LIST	

FERMI NATIONAL ACCELERATOR LABORATORY
UNITED STATES DEPARTMENT OF ENERGY

PPD/MECHANICAL SUPPORT
C LAYER MDT OCTANT
SPREADER BAR

SCALE	DRAWING NUMBER	SHEET	REV
.13	3823.130-MD-386772	1 OF 1	

CREATED WITH : MS2.1 GROUP: DO

Plotted by kpotter on 13-Jul-00 , File: 386772-01.pff