MINOS FAR DETECTOR
REVISED STRONGBACK

R.J. WOODS
JAN. 20, 2000

REVISE SPACING OF VERTICAL AND HORIZONTAL SUPPORT MEMBERS AS SHOWN BELOW:

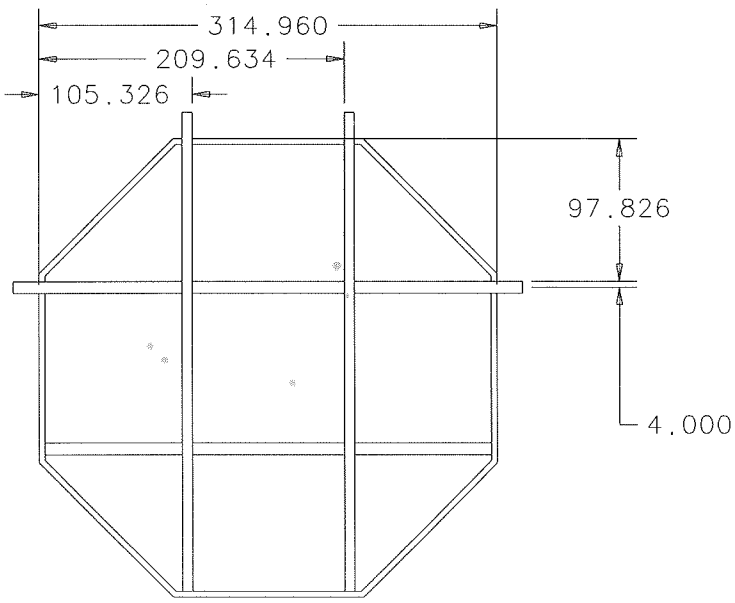

EXISTING STRONGBACK

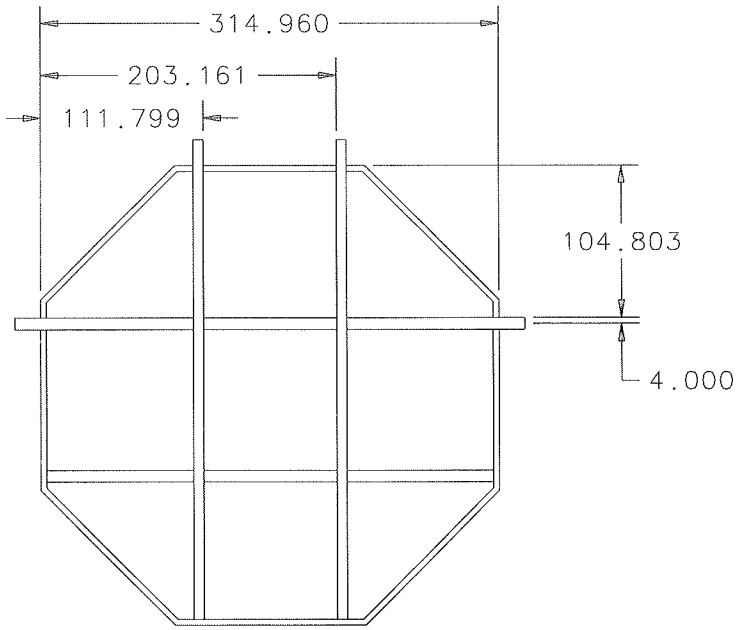

REVISED STRONGBACK

PRELIMINARY DESIGN:

1" STEEL PLATE WT. = 490/(1)(12) = 40.83 #/FT²
PLATE AREA = 83,400 IN² = 0.28 #/IN²
TOTAL WT = 83,400(0.28) = 23,352#

1) MEMBER D-E & K-L

SPAN = 128.8"

MEMBER = TS 16 × 4 × .3125
WT. = 40.35 #/FT
= 3.36 #/IN

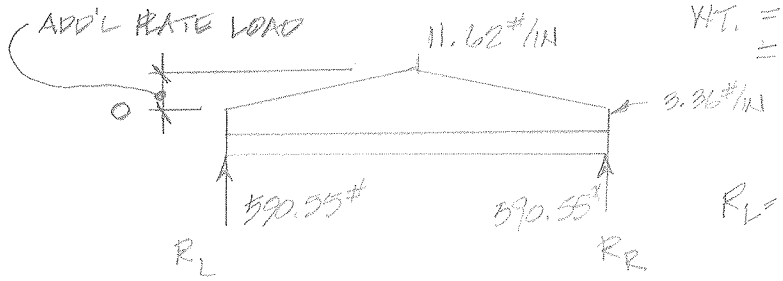

$R_L = R_R = 3.36(128.8)/2 + (11.62(128.8/2)/2$
$= 590.55\#$

$M = 3.36(128.8)^2/8 + \frac{748 \cdot (128.8)}{6}$
$= 23,025\ \#\text{-IN}$

$f_b = 23,025/40.7 = 620$ PSI

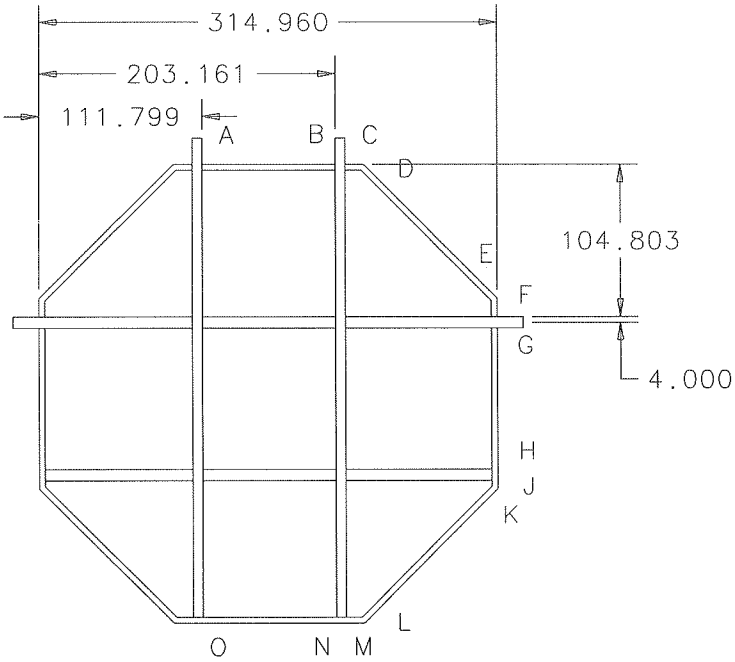

REVISED STRONGBACK

2) MEMBER G-J

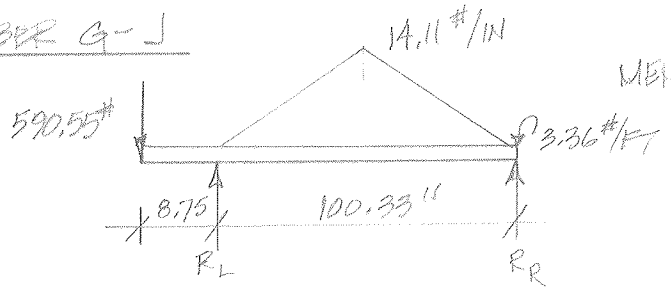

MEMBER = TS 16 × 4 × .3125

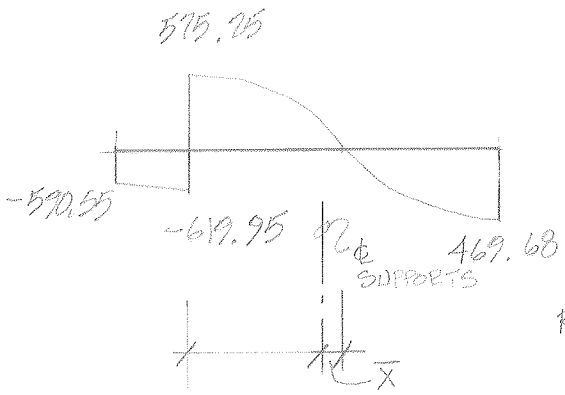

$$R_R = \left(3.36(100.33)\left(\tfrac{100.33}{2}\right) + 14.11(100.33)/2\left(\tfrac{100.33}{2}\right) - 8.75(3.36)\left(\tfrac{8.75}{2}\right) - 590.55(8.75)\right) / 100.33$$

$$= 469.68^{\#}$$

$$R_L = \left(\left(3.36(100.33+8.75)\left(\tfrac{100.33+8.75}{2}\right) + 14.11(100.33)/2\left(\tfrac{100.33}{2}\right) + 590.55(100.33+8.75)\right)\Big/(100.33)\right)$$

$$= 1{,}195.21^{\#}$$

MAX. NEG. M $= \dfrac{(590.55+619.95)(8.75)}{2}$

$= 5296$ #-IN

MAX. POS. M:

FIND $\bar{X}$:

$$575.25 - \left(\left(\tfrac{100.33}{2}\right)(3.36) + 14.11\left(\tfrac{100.33}{2}\right)/2\right) = 52.78$$

∴ MAX M CLOSER TO RIGHT SUPPORT

$$52.78 = 3.36(\bar{X}) + \frac{\bar{X}\left(14.11 + 14.11(-(0.28\bar{X}))\right)}{2}$$

$$0.28\bar{X}^2 - 34.94x + 105.56 = 0$$

$$\bar{X}^2 - 124.79 + 377 = 0$$

$$\frac{-b \pm \sqrt{b^2 - 4ac}}{2a} = 124.79 \pm \sqrt{(124.79)^2 - 4(}$$

$$= \frac{124.79 \pm \sqrt{(124.79)^2 - 4(1)(377)}}{2(1)}$$

$$= 3.098 = \bar{X}$$

MAX. POS M @ $100.33/2 + \bar{X} = 53.26''$ FROM LEFT SUPPORT

$$M = \tfrac{2}{3}(575.25)(53.26) - 5296$$
$$= 15{,}129 \text{ \#-IN}$$

$f_b = 15{,}129/40.9 = 370$ PSI

3) MEMBER A-B

SPAN = 91.36"

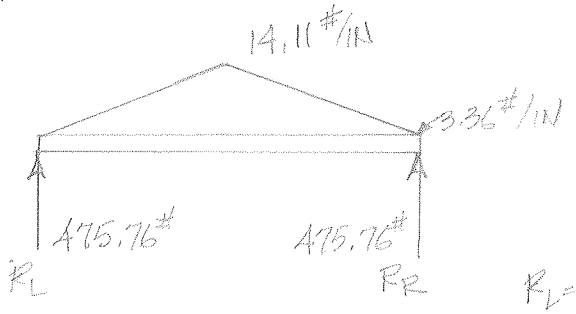

$R_L = R_R = 3.36(91.36)/2 + 14.11(91.36/2)/2$
$= 475.76\#$

$W = 14.11(91.36)/2$
$= 644.5$

$M = 3.36(91.36)^2/8 + \frac{644.5(91.36)}{6}$
$= 13\,320\ \#\text{-IN}$

$f_b = 13{,}320/40.9$
$= 326\ \text{PSI}$

4) MAJOR HORIZONTAL MEMBER G-G'

MEMBER = TS 16 × 8 × .3125 WT = 48.86 #/FT = 4.07 #/IN

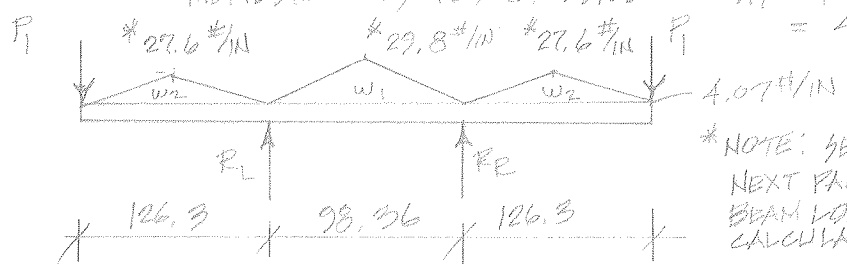

*NOTE: SEE FIGURES NEXT PAGE FOR BEAM LOAD CALCULATIONS

$P_1 = 469.68 + 590.55 + (350 \times .28)$ WEIGHT OF BAR
$= 1158.23\#$

$R_L = R_R = 4.07\left(\frac{2(126.3)+98.36}{2}\right) + 126.3(27.6/2) + (98.36/2)\left(\frac{29.8}{2}\right) + 1158.23$

$= 4\,348\ \#$

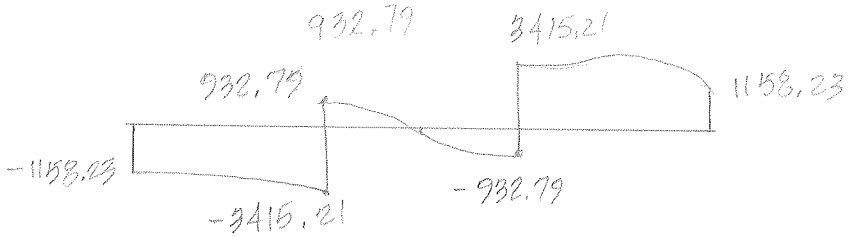

MAX NEG. M = 126.3(1158.23) + 2/3(3415.2 − 1158.23)
= 146,284 + 1505
= −147 789 #-IN

f_b = 147,789/60.1
= 2459 PSI

FIGURE 3

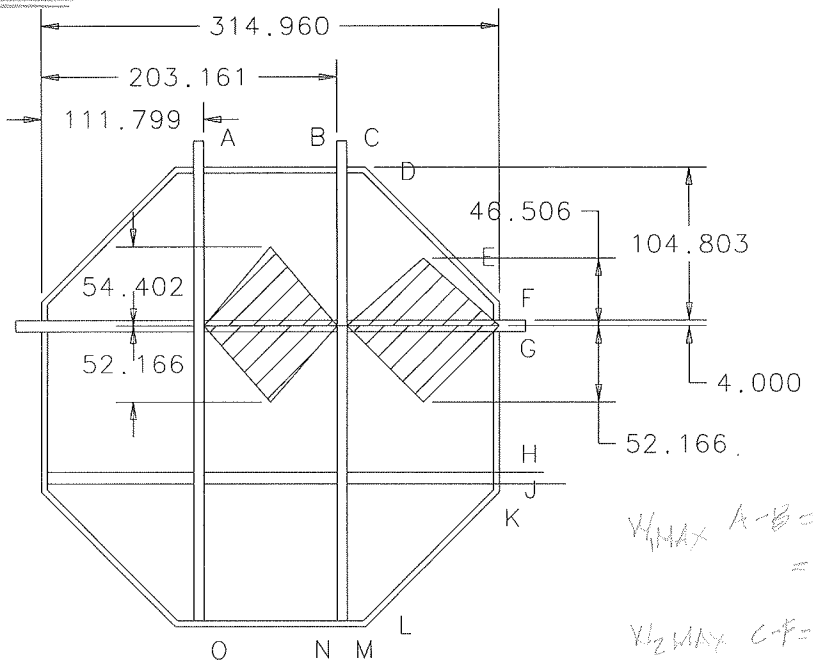

W_{1MAX} A-B = (54.4 + 52.17)(0.28)
= 29.8 #/IN

W_{2MAX} C-F = (46.5 + 52.17)(0.28)
= 27.6 #/IN

LOAD DISTRIBUTION ON
HORIZONTAL BEAM

MAX. CENTER SPAN MOMENT = −147,789 + 2/3(932.8)(98.4/2)
= −117,193 #-IN

∴ MOMENT @ CENTER SPAN IS STILL NEGATIVE.

MEMBER M-M'

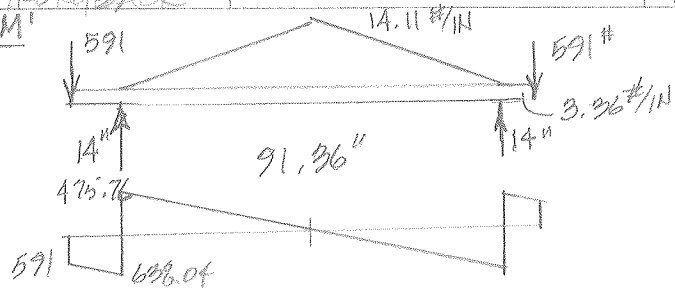

$F_b = 10{,}866/40.9$
$= 266$ psi
OK

$-M = 14\left(\frac{591+638.04}{2}\right) = 8603.3$ #-IN

$+M = 475.76\left(\frac{91.36}{2}\right)/2 = 10\,866$ #-IN

FIGURE 4

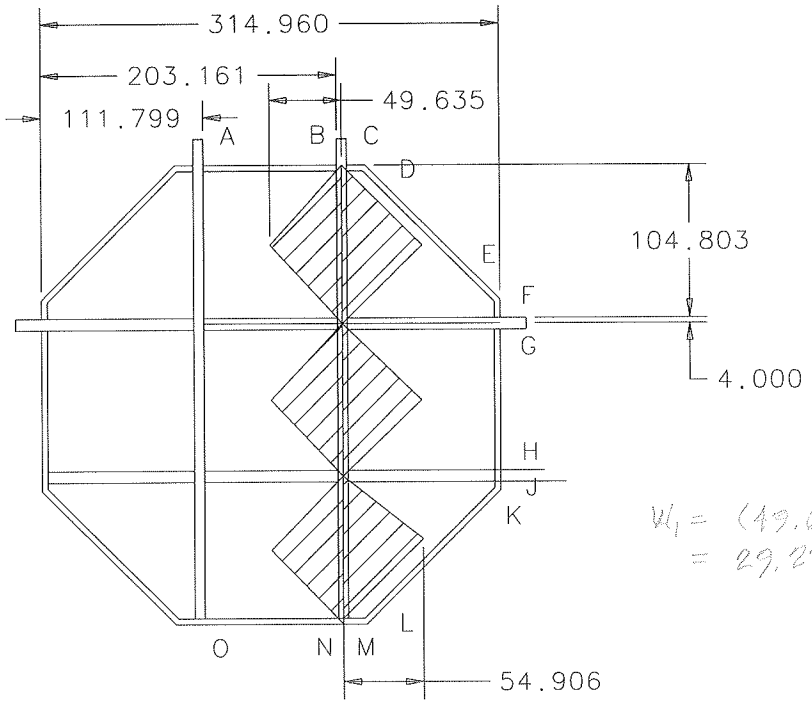

$W_1 = (49.64 + 54.91)(0.28)$
$= 29.27$ #/IN

LOAD DISTRIBUTION ON VERTICAL BEAM

4) MAJOR VERTICAL MEMBER B-N
SPAN = 332.96"

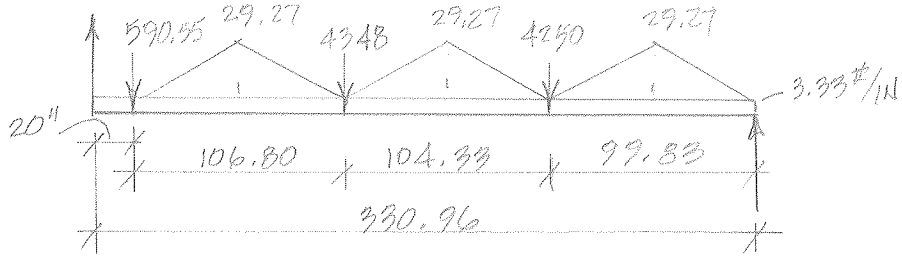

$$R_R = \left(20(590.55) + \left(\frac{106.80(29.27)}{2}\right)\left(20 + \frac{106.80}{2}\right) + (20+106.80)(4348) + \left(\frac{104.33(29.27)}{2}\right)\left(20 + 106.80 + \frac{104.33}{2}\right) + (20 + 106.80 + 104.33)(4250) + \left(\frac{99.83(29.27)}{2}\right)\left(20 + 106.80 + 104.33 + \frac{99.83}{2}\right) + 3.33(330.96)\left(\frac{330.96}{2}\right)\right) / 330.96 = \underline{7633.57^{\#}}$$

$$R_L = \left(\left(\frac{(99.83)(29.27)}{2}\right)\left(\frac{99.83}{2}\right) + 99.83(4250) + \left(\frac{104.33(29.27)}{2}\right)(99.83 + 104.33/2) + (99.83 + 104.33)(4348) + \left(\frac{106.8(29.27)}{2}\right)\left(99.83 + 104.33 + \frac{106.80}{2}\right) + (99.83 + 104.33 + 106.8)(590.55) + 3.33(330.96)\left(330.96/2\right)\right) / 330.96$$

$$= \underline{7207.98^{\#}}$$

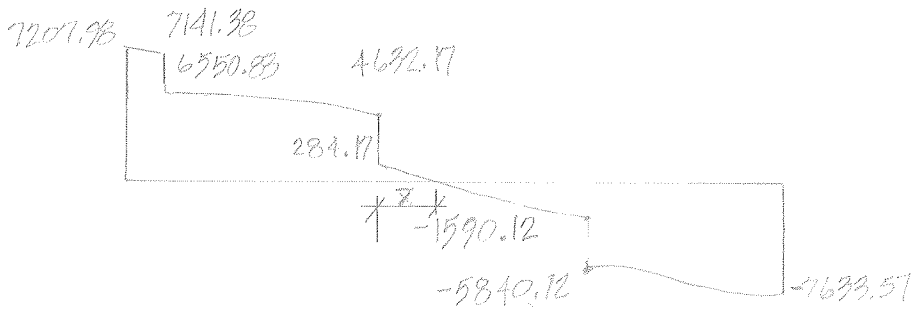

$$(284.17 + 1590.12)/104.33 = 17.96^{\#}/\text{IN}$$

$$284.17/17.96 = 15.82'' = \bar{x}$$

$$M_{MAX} = (7207.98 + 7141.38)(20)/2 + 4632.17(106.8) + 2/3(1918.66)(106.8) + 2/3(284.17)(15.82)$$

$$= 933\,225^{\#\text{-IN}}$$

$$f_b = 777{,}815/64.7$$

$$= 12\,022 \text{ PSI} \approx 12{,}000 \text{ PSI}$$ CHECK ANSYS MOMENTS

$$M_{MAX} = 78\,175$$

$$f_b = 78{,}175/64.7 = 1208 \text{ PSI} < 12{,}000 \text{ PSI}$$

SINCE ANSYS DISTRIBUTES MOMENTS, RESULTS ARE MORE ACCURATE THAN SIMPLE BEAM ANALYSIS ABOVE <u>W16 x 40 OK</u>