EXHIBIT A-1

Vacuum Vessel Engineering Note
(per Fermilab ES&H Manual Chapter 5033)

Prepared by	Jim Kilmer, Bob Wands	Date	10/31/07	Div/Sec	PPD
Reviewed by	Terry Tope	Date	11/29/07	Div/Sec	PPD
Div/Sec Head		Date	12/12/07	Div/Sec	PPD

1. Identification and Verification of Compliance

Fill in the Fermilab Engineering Conformance Label information below:

This vessel conforms to Fermilab ES&H Manual Chapter 5033

Vessel Title	MTest Beam Cerenkov Counter
Vessel Number	PP10107
Vessel Drawing Number	2926.ME-30401
Internal MAWP	8 psi
External MAWP	Full Vacuum (15 psi)
Working Temperature Range	-20 °F to 120 °F
Design/Manufacturer	Fermilab/ Fermilab
Date of Manufacture	2006
Acceptance Date	Unknown

Director's signature (or designee) if vessel is for manned area and requires an exception to the provisions of this chapter.

Amendment No.	Reviewed by:	Date:

Laboratory location code	MT6
Laboratory property number	None
Purpose of vessel	Beam Identification detector

List all pertinent drawings

List all pertinent drawings

Drawing No.	Location of Original
2926.ME-30401 Optic Assem Cerenkov Counter	BEG connect
2926.ME-30196 Housing – Welded Assem	BEG connect

2. Design Verification

Provide design calculations in the Note Appendix.

3. System Venting Verification

Can this vessel be pressurized either internally or externally? [X] Yes [ ] No
If "Yes", to what pressure? __8 psi and full vacuum_____

List all reliefs and settings. Provide a schematic of the relief system components and appropriate calculations or test results to prove that the vessel will not be subjected to pressures greater than 110% beyond the maximum allowable internal or external pressure.

Manufacturer	**Relief**	**Pressure Setting**	**Flow Rate**	**Size**
Circle Seal	D532B-4M	8 PSI	15 SCFM	¾" by 1"

4. Operating Procedure Section

Is an operating procedure necessary for the safe operation of this vessel?
[ ] Yes [X] No *(If "Yes", it must be appended)*

Is a testing procedure necessary for the safe acceptance testing (acceptance testing) of this vessel?
[ ] Yes [X] No
If "Yes", the written procedure must be approved by the division head prior to testing and supplied with this Engineering Note.

5. Welding Information

Has the vessel been fabricated in a Fermilab shop? [X] Yes [ ] No
If "Yes," append a copy of the welding shop statement of welder qualification.

The parts for this detector were machined at Hi-tech and welded by Fermilab welder Lenny Harbacek. The Fermilab weld shop does not keep records of welding certifications for the welders doing aluminum welding.

6. Exceptional, Existing, Used and Non-Manned Area Vessels

Is this vessel or any part thereof in the above categories? [ ]Yes [X] No
If "Yes" follow the Engineering Note requirements for documentation and append to note.

Calculations for Differential Cerenkov Head

October 17, 2007

This cerenkov head is a new vessel made to the original drawings of two others that were built in 1972. The only modifications made were to allow remote motion of the large mirror and does not affect the pressure integrity of the vessel at all. Note that all calculations of stresses for the vessel are done assuming a 15 psi internal or external loading. This rating on the vessel will be reduced to 8 psi because of the rating of the thin window. Also attached is a finite element calculation done by Bob Wands for the old vessels to find the stresses in the flat plates. Those plates are of unusual design and have very large holes in them. His calculations show that the plates have no excessive stresses under 15 psi load. First look at the smaller diameter pipe. All of this vessel is made from 6061-T6 Aluminum. The pipe is 18.75 inches OD by .375 inch wall by 7 foot 1 7/8inch long.
The formula is from the ASME code Section VIII Division 1. For the external loading:

$Do := 18.75 \cdot in$ $\quad t := 0.375 \cdot in$ $\quad L := 85.875 \cdot in$ $\quad psi := \frac{lb}{in^2}$

$\frac{Do}{t} = 50$ $\quad \frac{L}{Do} = 4.58$

Using these two ratios from Figure G: $A := 0.0007$

From Figure NFA-12 for aluminum material $B := 3300 \cdot psi$

$Pa := \frac{4 \cdot B}{3 \cdot \left(\frac{Do}{t}\right)}$ Pa is the critical collapse pressure for this tube

$Pa = 88\,psi$

Because Pa is greater than 15 psi this tube is OK for vacuum use. Now look at the internal loading for 15 psi.

$P := 15psi$ Internal pressure loading

$R := 9.0 \cdot in$ Tube internal radius

$E := 1.0$ Joint efficiency (no joint)

$S := 10500 \cdot psi$ Allowable stress for 6061-T6 from the code

$$t_{req} := \frac{P \cdot R}{S \cdot E - 0.6 \cdot P}$$

$t_{req} = 0.013\,in$

Since the required thickness 0.013inch is less than the available thickness of 0.375 inch the tube is OK for 15 psi internal pressure.

Now look at the large diameter pipe used in the vessel.

$Do := 24.25 \cdot in$ $\quad t := 0.375 \cdot in$ $\quad L := 19.69 \cdot in$

$\frac{Do}{t} = 64.667$ $\quad \frac{L}{Do} = 0.812$

From the ASME code Figure G $\quad A := 0.0035$

From Figure NFA-12 $\quad B := 9000 \cdot psi$

Now find the critical collapse pressure for the tube:

$$Pa := \frac{4 \cdot B}{3 \cdot \left(\frac{Do}{t}\right)}$$

$Pa = 185.567\ psi$

Since this Pa is greater that 15 psi the short tube is OK for full vacuum. Now look at the internal pressure.

$P := 15 \cdot psi$

$R := 11.75 \cdot in$ Tube Internal radius

$E := 1.0$ (No joint)

$S := 10500 \cdot psi$ Allowable stresss for 6061-T6 from the code

$$t_{req} := \frac{P \cdot R}{S \cdot E - 0.6 \cdot P}$$

$t_{req} = 0.017\ in$

Since treq is less than the real t = 0.375 inches the vessel is OK for 15 psi internal pressure or full vacuum.

Now look at the structural welds on the vessel. Note that for this vessel the welds are designed so that for external pressure the welds have compressive forces on them supported by the pipes. Therefore we only need to look at internal pressure for the welds.

For the 24 inch tube welds:

$t_w := \frac{.375 \cdot in}{\sqrt{2}}$ Throat distance of weld

$t_w = 0.265\ in$

$l_w := \pi \cdot Do$ Length of weld

$l_w = 76.184\ in$

$A_w := t_w \cdot l_w$

$A_w = 20.201\ in^2$

$F := P \cdot \left(\frac{\pi \cdot Do^2}{4} \right)$ Force on the weld

$\sigma_w := \frac{F}{A_w}$

$\sigma_w = 342.947\ psi$

Therefore for the welds on the 24 inch diameter tube the stress is OK.

Now look at the welds on the 18.75 inch tube. The throat distance is the same as above.

$l_{smw} := \pi \cdot 18.75 \cdot in$ Length of weld on small tube

$A_{smw} := t_w \cdot l_{smw}$

$A_{smw} = 15.62\ in^2$

$F_{smw} := P \cdot \left[\frac{\pi \cdot (18.75 \cdot in)^2}{4} \right]$

$\sigma_{smw} := \frac{F}{A_{smw}}$

$\sigma_{smw} = 443.545\ psi$

So the weld stress on the small tube is also OK for the pressure. Lastly look at the welds on the 12 inch pipe from the vessel body to the inlet flange. These welds are in shear for either internal or external pressure andd the same stress, but opposite sign and direction. For internal pressure:

The weld throat distance is the same.

$l_1 := \pi \cdot (12.75 \cdot in - .375 \cdot in)$ Use the median diameter of the weld

$l_1 = 38.877\ in$

$A_1 := t_w \cdot l_1$

$A_1 = 10.309\ in^2$

$F_1 := P \cdot \left[\frac{\pi \cdot (12.75 \cdot in)^2}{4} \right]$

$\sigma_1 := \frac{F_1}{A_1}$

$\sigma_1 = 185.776\ psi$

These welds on the 12 inch pipe are OK as well.

October 2, 2003

Stress Analysis of Cherenkov Counter Flat Plates

Bob Wands

Introduction and Summary

A Cherenkov counter, used for many years without incident, is reviewed to verify that the working stresses in the two 0.75 inch thick flat heads do not exceed the ASME Section VIII, Div. 1 allowable stress of 10,500 psi for SB-209 6061-T6 aluminum.

The Finite Element Model

The finite element model, shown below in Fig. 1, consists of 160K 10-node tetrahedral elements. All penetrations are included.

The finite element model was subjected to an external pressure of 15 psi. Point forces were applied to the penetrations' circumferences to account for the pressures on the closures.

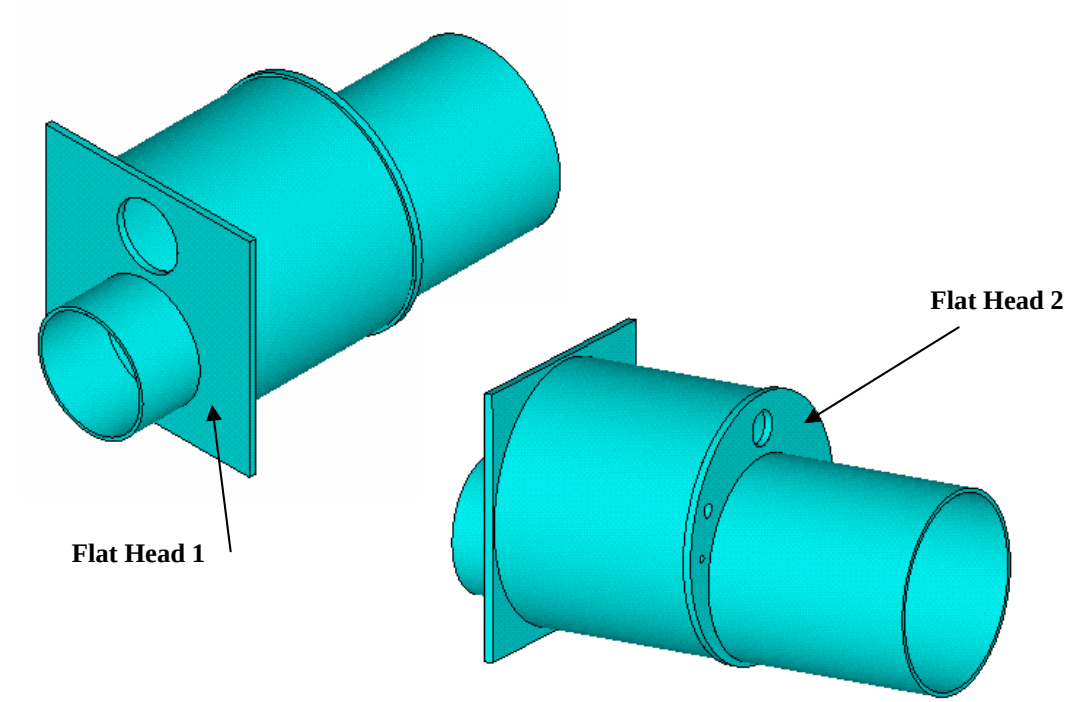

Figure 1. Finite Element Model of Cherenkov Vessel

Figs. 2 and 3 show the stresses in head 1 and head 2, respectively. Both heads have maximum stresses which are less than the allowable stress of 10,500 psi.

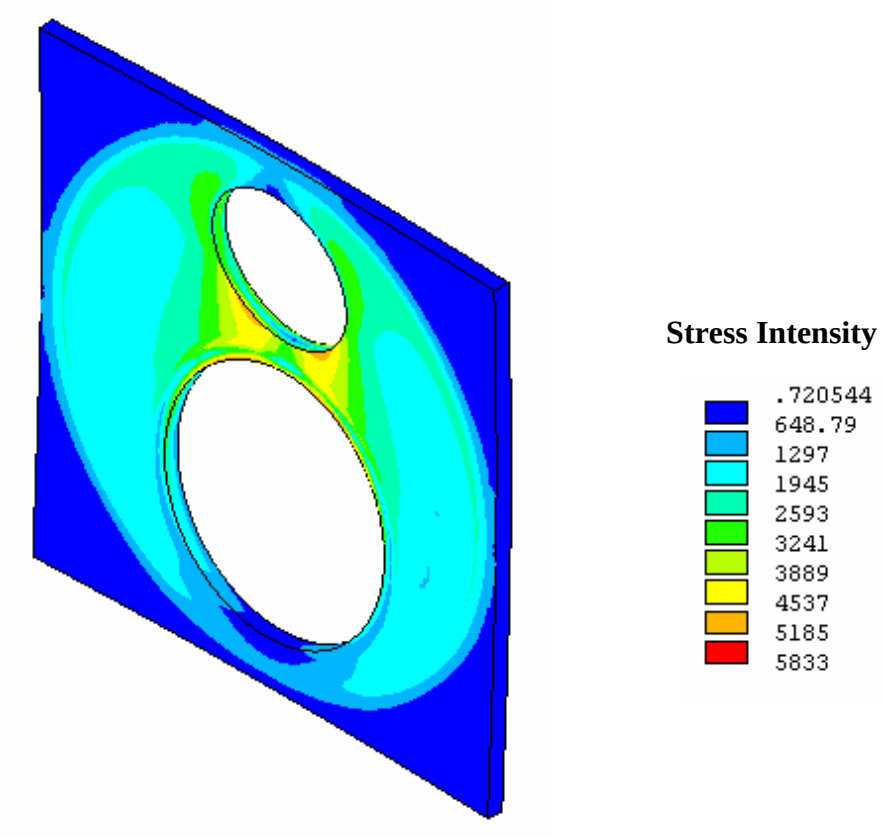

Figure 2. Stresses in Flat Head 1

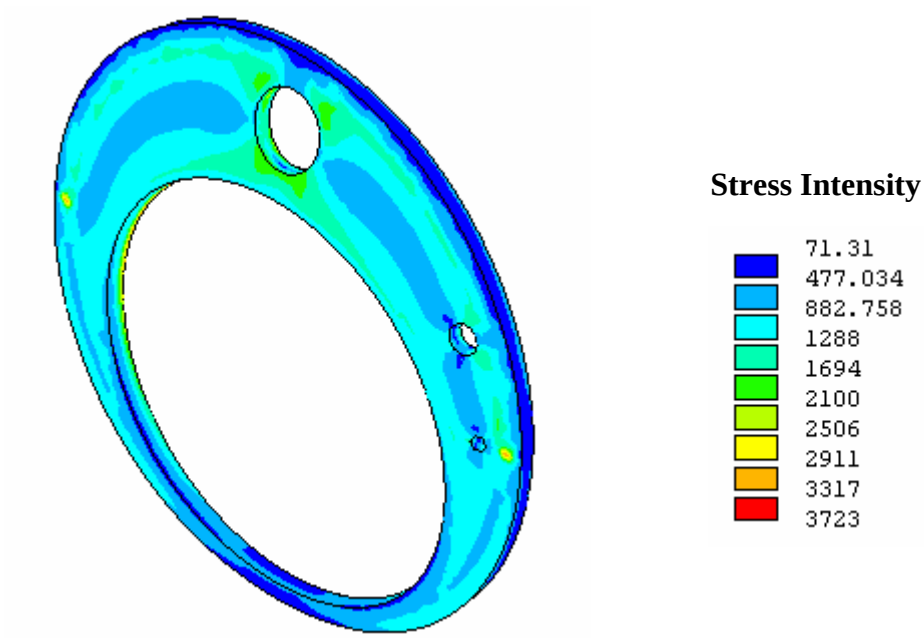

Figure 3. Stresses in Flat Head 2

Relief Valve Sizing for the Meson Test Beam Facility Differential Cerenkov

The Meson Test Beam Facility differential cerenkov counter will be operated with nitrogen gas. The vessel will operate from full vacuum up to its relief valve set point of 8 psig.

Nitrogen is supplied by a 160 liter high pressure stockroom dewar located outside the gas shed on the west side of the MS4 service building. This supply is backed up by two nitrogen cylinders located inside the gas shed. Print ME-397793 provides a schematic of this gas system. Both sources of nitrogen are relieved at 100 psig and typically operate at a much lower regulated pressure. The nitrogen flows thru 1,000 inches of ¼" copper tubing and then 800 inches of 3/8" black poly tubing. The gas delivery tube lengths were taken from the vacuum vessel engineering note for vessel PPD10093, the previous vessel to occupy this space in the beam line. For ease of calculation, the only restriction considered is the ¼ inch tubing. The restriction provided by the numerous valves between the gas source and the vessel is ignored as is the section of 3/8 inch tubing. The maximum flow that can be delivered thru the ¼ inch tubing is calculated using equation 3-20 from Crane's Technical Paper 410 which is applicable to the discharge of compressible fluid thru pipe.

$$q_m^{'} = 412\frac{Yd^2}{S_g}\sqrt{\frac{\Delta P \rho_1}{K}}$$

where

q_m' = net rate of flow, in cubic feet per minute at standard conditions (SCFM).
Y = net expansion factor for compressible flow through pipe (found from chart on page A-22 in Crane's Technical Paper 410, 0.71).
d = internal diameter of pipe, inches (0.19 in. for ¼ in. copper tube).
S_g = specific gravity of a gas (1.0 for nitrogen).
ΔP = differential pressure between inlet and outlet (a function of K and P_1', found from chart on page A-22, the full available pressure drop of 98 psi is used as a conservative value).
P_1' = inlet pressure, psia (100*1.1 + 14.7 = 124.7 psia, which is the maximum supply pressure that occurs when the supply relief is at 10% over pressure).
ρ_1 = density of gas at inlet (0.6278 lbm ft^{-3} for nitrogen at 124.7 psia and 70 ^oF).
K = resistance coefficient calculated from the following

$$K = f\frac{L}{D}$$

where

f = friction factor found from chart on page A-25 where f is a function of the Reynolds number (Re), 0.038.

L = length of pipe in feet (1000 inches = 83.3 feet of the ¼ inch tubing)
D = pipe internal diameter in feet (Internal diameter of ¼ inch refrigeration tubing is 0.19 inches which is 0.01583 feet).

The Reynolds number is found from

$$\mathrm{Re} = 0.482\frac{q_h^{'}S_g}{d\mu}$$

where

μ = viscosity of nitrogen in centipoise (0.01743 cp for nitrogen at 124.7 psia and 60 ^{o}F).

Using a simultaneous equation solver, the calculations yield

$$q_m^{'} = 412\frac{0.71(0.19)^2}{1.0}\sqrt{\frac{(98.0)0.6278}{200.0}} = 5.86\ SCFM$$ of nitrogen.

$$K = 0.038\frac{83.3}{0.01583} = 200.0$$

$$\mathrm{Re} = 0.482\frac{(5.86)60(1.0)}{(0.19)0.01743} = 51143.$$

The vessel is equipped with a Circle Seal D532B-4M relief valve set at 8 psig. Interpolating from the flow table provided by Circle Seal yields a flow of 15 SCFM for a 4M valve with an 8 psig cracking pressure at 50% overpressure which is 12 psig.

The 15 SCFM relief valve capacity is greater than the 5.92 SCFM the nitrogen system can deliver. Thus the vessel will not exceed 12 psig of internal pressure.

Circle Seal 500 Series Relief Valve Capacities.

500 Series

.5–150 PSI

Air Flow Rates (500-M & -MP)

M—Popoff valves 1/2″–1″
MP—Inline valves 3/8″–1-1/4″

Crack Pressure PSIG	Percent Over Pressure Beyond Cracking (SCFM air at room temperature)								
	10%			25%			50%		
	4M/6MP	6M/8MP	8M/10MP	4M/6MP	6M/8MP	8M/10MP	4M/6MP	6M/8MP	8M/10MP
.5	.07	.07	—	.50	.50	—	.80	2.2	—
1	.10	.10	—	.70	.70	—	1.7	3.2	—
1.5	.30	.30	—	1.0	1.4	—	2.2	5.5	—
2	.50	.50	—	1.2	1.7	—	3.0	7.0	—
2.5	.60	.60	—	1.8	3.0	—	4.2	10.5	—
3	.80	.80	—	2.2	4.0	—	5.0	13	—
4	1.0	1.0	1.5	3.0	5.0	30	7.5	17	56
5	1.0	1.2	2.5	3.5	6.0	34	9.0	20	64
10	1.0	2.4	7.0	6.0	12	60	19	40	115
15	1.6	3.0	7.0	8.5	22	60	27	80	160
20	2.0	5.0					34	110	190
25	3.0	5.5					43	116	—
30	3.5	6.0					50	121	—
40	5.5	8.5					72	136	—
50	7.0	10					90	150	—
60	11	13					100	165	—
70	15	17					111	182	—
80	20	21	77	56	81	215	123	204	—
90	26	26	88	68	94	235	138	225	—
100	30	30	100	75	105	250	150	240	—
110	33	38	115	80	112	258	166	—	—
120	37	47	132	86	125	270	183	—	—
130	41	57	150	93	150	282	201	—	—
140	46	71	175	102	163	290	222	—	—
150	50	80	190	110	175	300	240	—	—

Interpolate to 15 SCFM for 8 psig cracking pressure

REV	DESCRIPTION	DRAWN	DATE
		APPROVED	DATE
A	UPDATED AND REVISED	N.CADENA	11/19/02
		T.TOPE	11/20/02
B	UPDATED AND REVISED,ADDED SET POINT TO SAFTY VALVES,ADDED BCKOV 1 & 2 AND ASSOC. INSTRUMENTATION,AND GAS HOUSE BOTTLE LAYOUT,AND MV-102-BC,MV-202-BC ADDED FI,PSV-100,200-BC,MV-105,205-BC PT-102,202-BC,FO-100-BC	N.CADENA	8/24/04
		T.TOPE	8/26/04
C	SHT.1-ADDED FIRUS GAS DET. SYS. ADDED SHT.2	N.CADENA	9/13/05

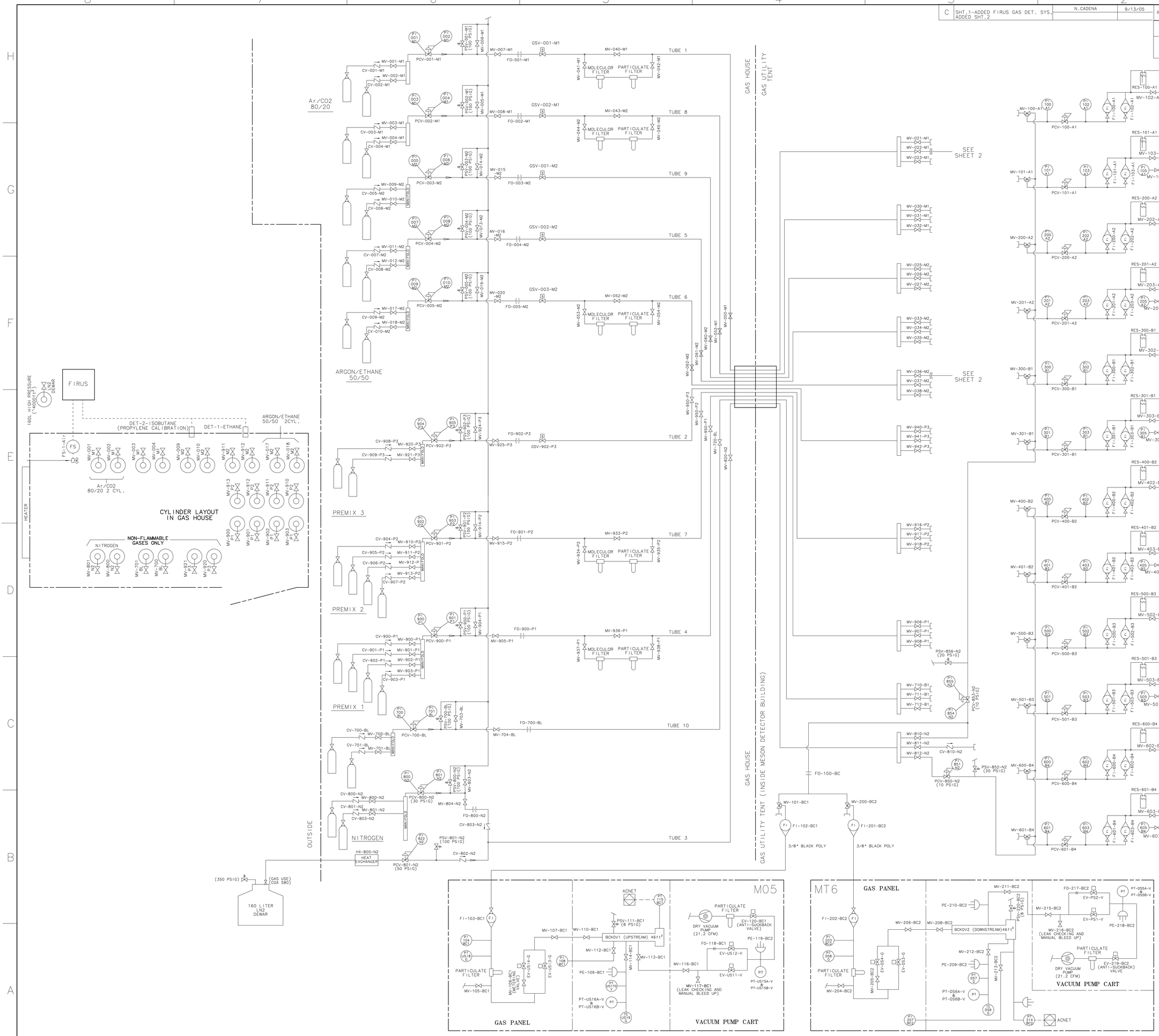

UNLESS OTHERWISE SPECIFIED			ORIGINATOR	T.TOPE	00-MAR-2002
.XX	.XXX	ANGLES	DRAWN	N.CADENA	26-APR-2002
±	±	± 1°	CHECKED	T.TOPE	05-JUN-2002
			APPROVED	T.TOPE	05-JUN-2002

1. BREAK ALL SHARP EDGES MAX.
2. DO NOT SCALE DRAWING.
3. DIMENSIONS BASED UPON ASME Y14.5M-1994
4. MAX. ALL MACH. SURFACES 125
5. DRAWING UNITS: U.S.INCH

USED ON

MATERIAL

FERMI NATIONAL ACCELERATOR LABORATORY
UNITED STATES DEPARTMENT OF ENERGY

PPD/MECHANICAL DEPARTMENT
MESON TEST BEAM GAS SYSTEM
PIPING & INSTRUMENTATION DIAGRAM

SCALE	DRAWING NUMBER	SHEET	REV
NONE	9214.000-ME-397793	1 OF 2	C

CREATED WITH : Ideas12NXSeries GROUP: PPD/MECHANICAL DEPARTMENT

Created: 07:42:12 on 17-05-07 (D-M-Y) By: catalan State: 1-INITIAL