Fermilab

Particle Physics Division

Mechanical Department Engineering Note

MD-ENG-368

Number: PPD-Doc-1471 / COUPP-Doc-507 Date: July 27, 2011

Project: COUPP-60

Title: COUPP-60 Hydraulic Hose Failure Analysis

Author(s): Erik Voirin

Reviewer(s): Rich Schmitt

Key Words: pressure fluctuation hydraulic hose failure bending stress

Abstract Summary:

This document is an analysis of the cause for the hydraulic hose failure which occurred on the COUPP project. This document lists a compilation of hydraulic hose failure modes from multiple sources, defines the plausibility of each failure mode being a contributing factor to this, and possible future failures. Conclusion is the failure was caused by improper installation and bending forces near the hoses end connection. Recommendations for design and material changes, inspection schedules, and proper hose installation are supplied in the document.

TABLE OF CONTENTS

I. FAILURE SCENERIO 1

II. FAILED HOSE SPECIFICATIONS AND INSPECTION 5

III. LIST OF FAILURE MODES 8

IV. FAILURE MODES ANALYSIS 11

V. FAILURE ANALYSIS CONCLUSION 21

VI. RECCOMMENDATIONS TO PRECLUDE RECURRANCE 22

REFERENCES 24

ATTACHMENT #1: Incident report: COUPP-60 burst hydraulic line
Author: Hugh Lippincott
Description: Incident Report COUPP-60 burst hydraulic line

ATTACHMENT #2: P&ID, Drawing 9219.000-ME-444682 REV J
Author: Jim Catalanello /Rich Schmitt
Description: Mechanical/Eng Design Layouts COUPP-60 E.961 Flow Diagram

ATTACHMENT #3: Parflex Product Bulletin - Sect. HH Num27
Author: Parker Hannifin Corporation
Description: Guide for checking crimp and swage dimensions

ATTACHMENT #4: Inhibited propylene glycol MSDS
Author: BuyChemicalsDirect
Description: MSDS and information on fluid used in COUPP-60

I. FAILURE SCENARIO

A hydraulic hose failure of one of the COUPP-60 experiment's pressurized hoses, a Parker ParFlex 560-8, necessitated an investigation into the cause of the failure, if any design errors contributed to the failure, and recommendations to prevent a recurrence of the event.

ATTACHMENT #1 lists the specific incidents preceding and after the specific hose failure. The hose, which runs between MV-27 and MV-36, see Figure 1, failed by leaking through the inner core material, through the steel braid, and into the outer jacket. Outer jackets are meant to stop abrasion of the steel braid and are therefore not designed for internal pressure. The leaking of the internal core subjected the outer jacket to internal pressure, causing it to burst, see Figure 2, and leak approximately one liter of an inhibited propylene glycol mixture, fluid specifics can be found in ATTACHMENT #4.

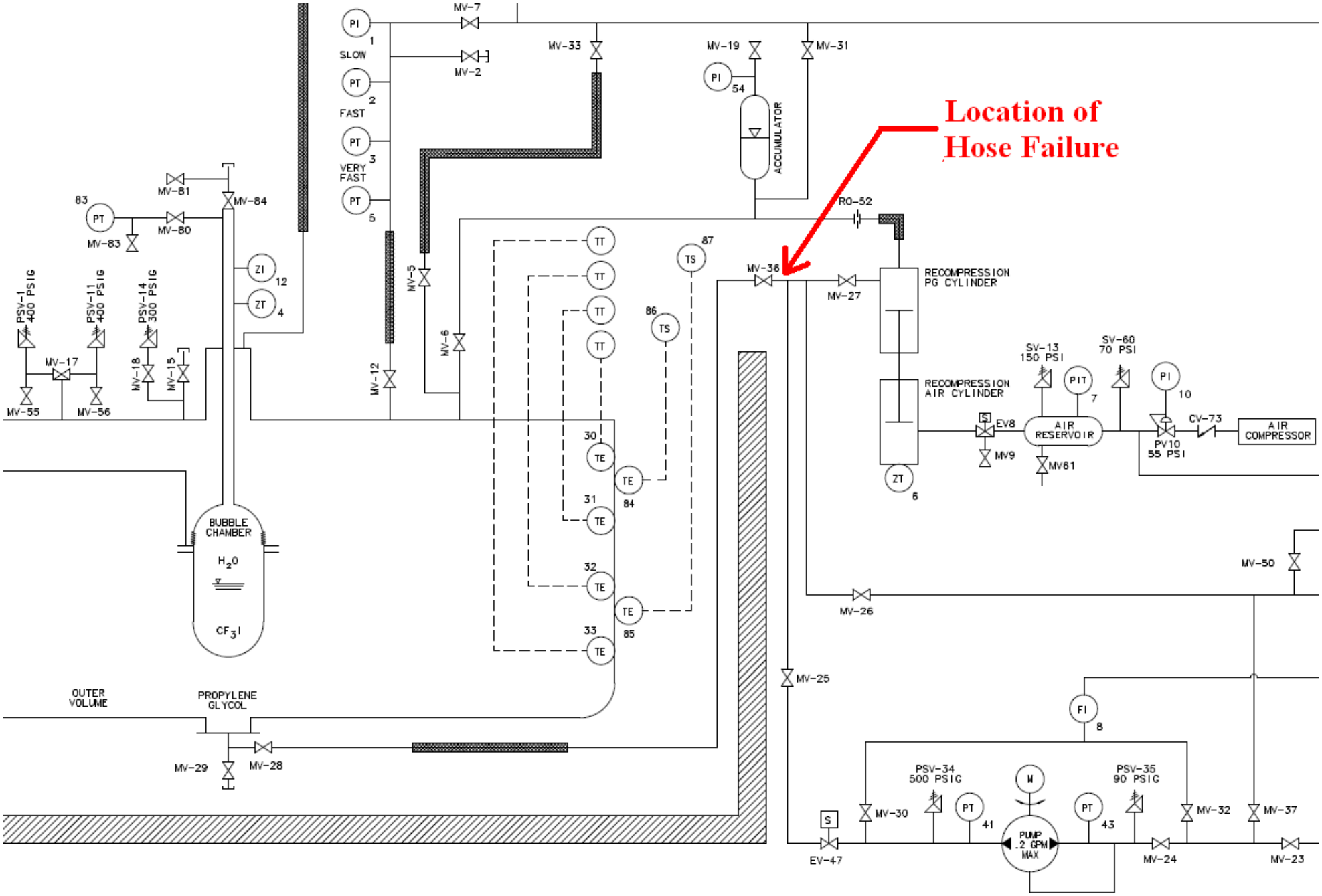

Figure 1: Location of hydraulic hose failure, see ATTACHMENT #2 for full P&ID.

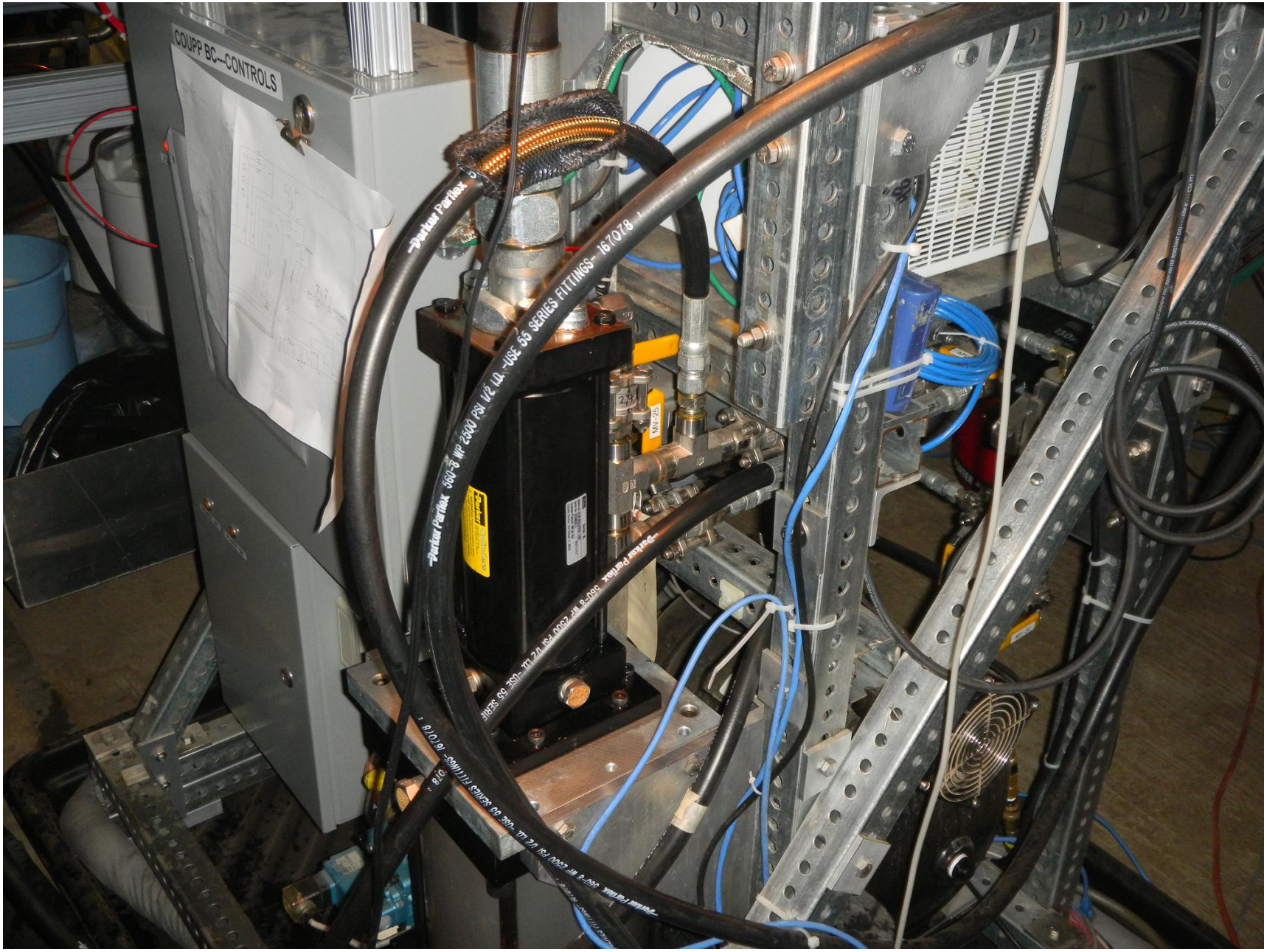

Figure 2: Image of hydraulic hose failure, note how the outer jacket burst revealing the still undamaged steel braid.

Several pressure recording devices are mounted on various parts of the experiment and all were recording during the failure. Data analysis estimates the approximate times the internal leakage and external bursting took place according to Figure 3, where we see the maximum recorded pressure was approximately 130 psi, (hose rated for 2500 psi).

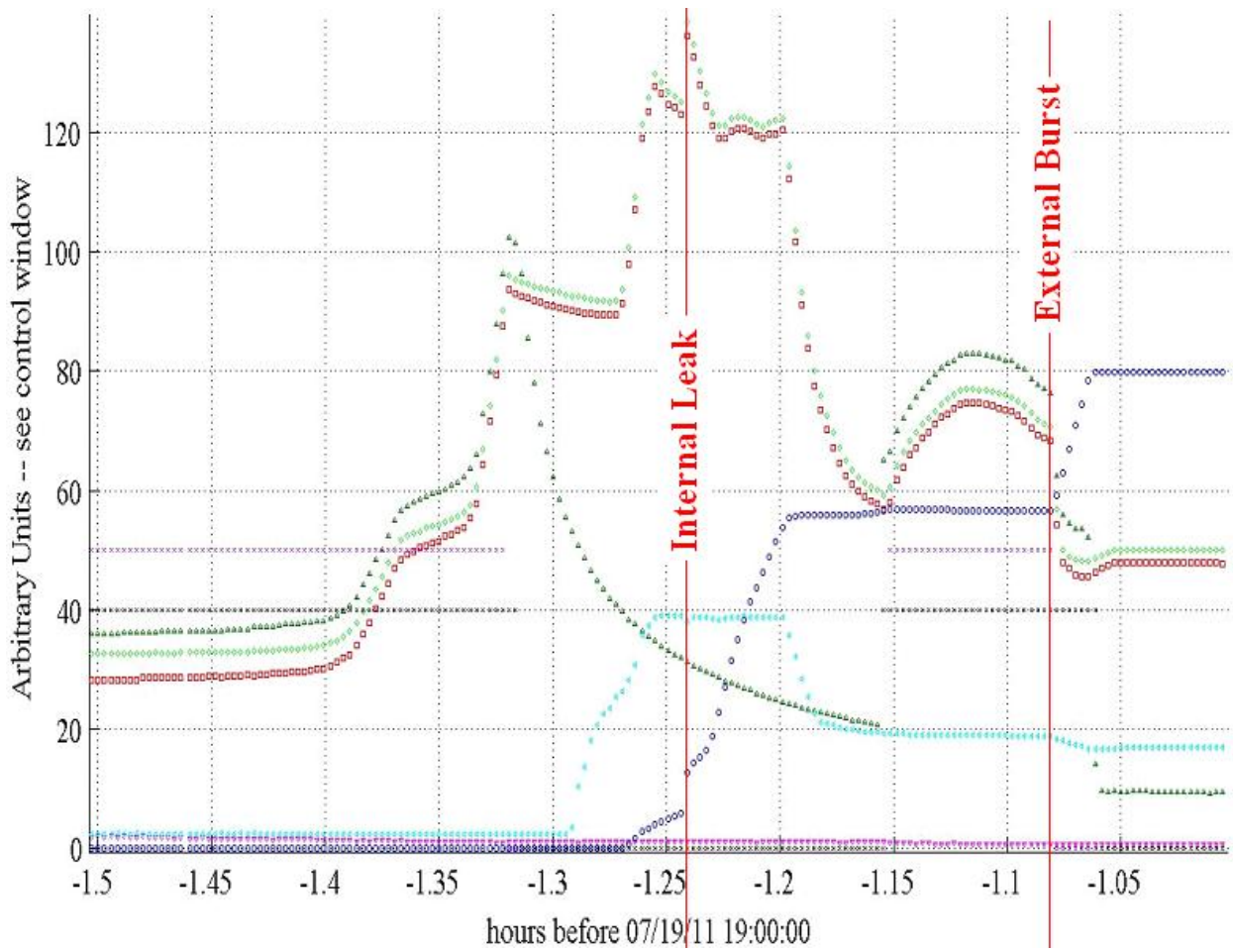

Figure 3: Pressure measurements and piston position surrounding the time of failure.

Figure 3 Legend:

- blue points - piston position x 10 (inches x 10)
- green diamonds - PT83, pressure in the inner vessel (psig)
- red squares - PT3, pressure of the glycol in pressure vessel (psig)
- dark green carrots - PT41 pressure of the pump, downstream (psig)
- magenta carrots - PT43, pressure of the pump, upstream (psig)
- cyan carrots - PT7, pressure in the air reservoir (psig)
- purple exes - Pump enable (0 or 50)
- black exes - EV47, valve on the pump (0 or 40)

II. FAILED HOSE SPECIFICATIONS AND INSPECTION

Failed Hose Specifications:

Manufacturer:	Parker Hannifin Corporation
Model Number:	Parflex 560-8
Materials:	Inner tube: Polyester
	Reinforcement: Steel wire braid
	Outer jacket: Urethane
Burst Pressure:	Four times the maximum working pressure, (10,000 psi)
Vacuum Service:	28” Hg
Temperature:	-40 to 250°F*
	*Limited to 135oF for synthetic hydraulic fluids and water based fluids

Table 1: Manufacturer Hose Specifications [5]

Part Number	I. D.		Max. O. D.		Max. Working Pressure		Min. Bend Radius		Weight		Crimp Fitting		80C Crimp Die
#									kg				
560-8	1/2	13	0.80	20	2500	17.24	3-1/4	83	.202	.301	55	51-75	P08J

Inspection:

The failed hydraulic hose was removed from the experiment and examined by Mark Ruschman. Once the outer jacket was removed, the hose was pressurized with air and a leak near the end coupling closest to the outer jacket rupture was found, see Figure 4. Upon removing the steel braid, two breakages in the inner hose core, near the end coupling were found, see Figures 5 and 6.

Figure 4: Leak in hose with outer jacket removed, note undamaged steel braid.

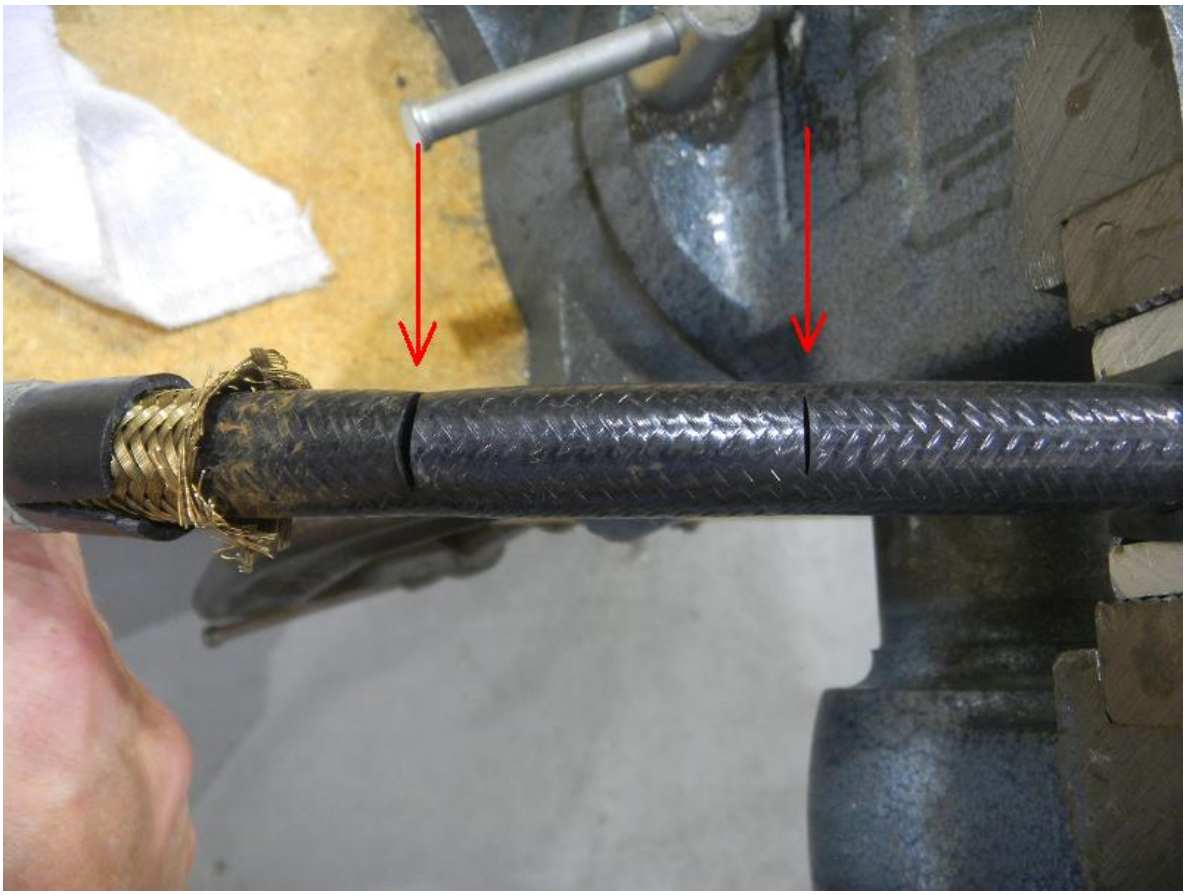

Figure 5: Two inner core breakages near end connection with removed braid.
(Note how the inner core is torn sagittally, centered about the outside of the bend)

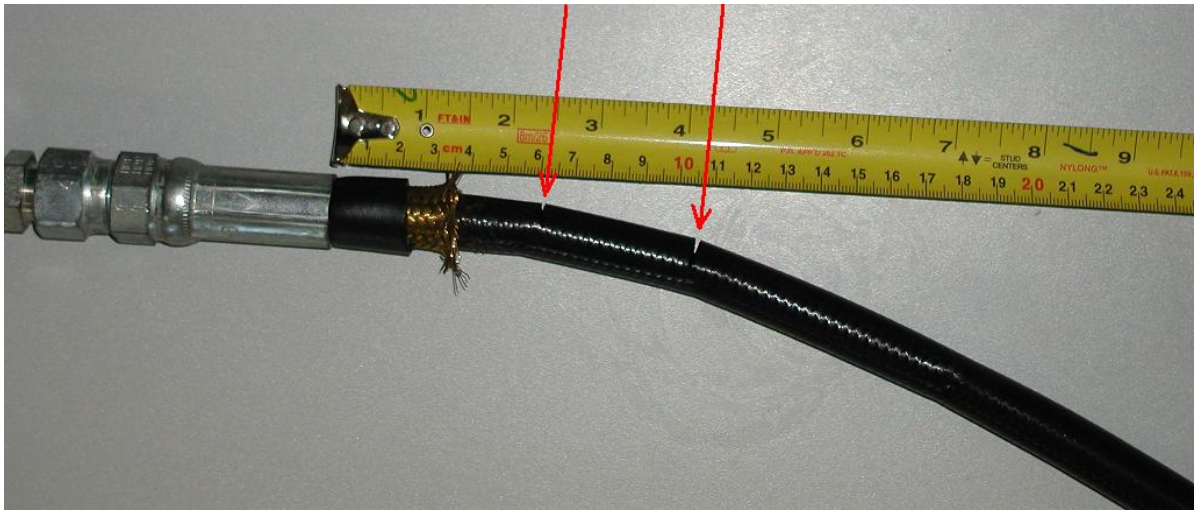

Figure 6: Ninety degree rotated view of inner core breakages, braid removed.
(Note how the inner core is torn sagittally, centered about the outside of the bend)

III. LIST OF FAILURE MODES

Hydraulic hose have a finite service life, which can be reduced by a number of factors. From a maintenance perspective, little or no attention is usually paid to the hoses of a hydraulic system until a failure occurs.[1] A list of failure modes from several sources, [1], [2], [3] for hydraulic hoses, as well as other common failure modes, sometimes referred to as the "notorious nine" include:

1. EXTERNAL DAMAGE
    a. Hydraulic hose manufacturers estimate that 80% of hose failures are attributable to external physical damage through pulling, kinking, crushing or abrasion of the hose. Abrasion caused by hoses rubbing against each other or surrounding surfaces is the most common type of damage.
    b. To prevent external damage, ensure all clamps are kept secure, pay careful attention to routing whenever a replacement hose is installed and if necessary, apply inexpensive polyethylene spiral wrap to protect hydraulic hoses from abrasion.
2. OVERPRESSURE
    a. Hoses are designed with a maximum working pressure which if exceeded reduces service life, the burst pressure of the failed hose is four times the working pressure, or 10,000 psi.
3. EXTREME TEMPERATURE FLUXUATIONS
    a. Depending on the fluid media, maximum operating temperatures are listed which, if exceeded, limits the use of the hose and its service life.
    b. Very high or low ambient temperatures affect cover and reinforcement materials, reducing the life of the hose. Ambient temperatures, in conjunction with internal temperatures, should be considered. This situation can occur in hot process piping operations.

4. EXTREME PRESSURE FLUXUATIONS
    a. Frequent and extreme pressure fluctuations, e.g. rock hammer on a hydraulic excavator, accelerate hose fatigue. In applications where a two-wire braid reinforced hydraulic hose meets the nominal working pressure requirement but high dynamic pressure conditions are expected, the longer service life afforded by a spiral reinforced hydraulic hose will usually more than offset the higher initial cost.
5. IMPROPER END CONNECTIONS / CRIMPING
    a. Improper crimping and/or end connections will result in failure of the hose by leaking at the connection point of the crimp connector. Manufacturers give procedures and inspection guidelines for these connection types.
6. VACUUM SERVICE
    a. Vacuum service is not recommended for double-wire braid or spiral-wire reinforced hose. If vacuum data is not given in a catalog, then the hose is usually not recommended for this type of service.
7. CHEMICAL RESISTANCE
    a. Consider the chemical resistance of the fittings, O-rings, hose cover, and inner tube. Covers are designed to resist most common mildew, cleaning solvents, oils, and fuels. Charts detailing the chemical resistance of hose inner tubes, O-rings, and fitting materials are found in manufacturer's handbooks.
8. MANUFACTURING DEFECTS
    a. A thinner wall area of the hose or other defect such as material inconsistencies can result in premature hose failure. These are expected to be rare as sources do not even cite this as a common failure mode. Nevertheless, this mode was examined as well.

9. IMPROPER OR MULTI-PLANE BENDING
    a. Bending a hydraulic hose in more than one plane results in twisting of its wire reinforcement. A twist of five degrees can reduce the service life of a high-pressure hydraulic hose by as much as 70% and a seven degree twist can result in a 90% reduction in service life.
    b. Multi-plane bending is usually the result of poor hose-assembly selection and/or routing but can also occur as a result of inadequate or unsecure clamping where the hose is subjected to machine or actuator movement.
    c. Several sources give best practices for proper hose routing to prevent stresses due to bending beyond the minimum bend radius, or too close to fixed constraints such as end connections.
    d. Recommended minimum bend radius is based on maximum operating pressure with no flexing of the hose. Safe operating pressures decrease when the bend radius is reduced below the recommended minimum. Flexing the hose to less than the specified minimum bend radius reduces hose life. The precise bend radius is measured at the inside curvature of the hose and is often difficult to determine

IV. FAILURE MODES ANALYSIS

Each of the previously mentioned failure modes in analyzed for applicability and plausibility of causing this, and possible future failures of hydraulic hoses on the COUPP-60 experiment.

1. EXTERNAL DAMAGE
    a. NOT A PLAUSABLE CAUSE OF FAILURE
        i. Hoses were inspected and found to be free of external abrasions.
2. OVERPRESSURE
    a. NOT A PLAUSABLE CAUSE OF FAILURE
        i. The COUPP-60 Pump and Piston are incapable of producing the constant pressures needed to cause failure of the hose due to overpressure. The pump has a relief valve set at 500 psi, and parts of the vessel contain relief valves set at 300 and 400 psi. The hose failed while being pressurized and a recorded reading in the inner and outer vessels was roughly 130 psi at the time of initial leakage. The hose has a working pressure of 2,500 psi and a burst rating of 10,000 psi.
3. EXTREME TEMPERATURE FLUXUATIONS
    a. NOT A PLAUSABLE CAUSE OF FAILURE
        i. The COUPP-60 experiment is located in an indoor temperature controlled environment; ambient temperatures never exceeded the maximum 135°F rating of the hose given for synthetic hydraulic fluids and water-based fluids.
        ii. The in hose temperatures could not have exceeded the 135°F rating of the hose, as this portion of the hose is freely cooled by surrounding air, and contains no nearby heaters or other

means of artificially heating the fluid. In-hose temperature is expected to be at or very near ambient temperature.

4. EXTREME PRESSURE FLUXUATIONS
    a. NOT A PLAUSABLE CAUSE OF FAILURE
        i. The COUPP-60 experiment reacts to increasing pressure in the bubble chamber by quickly compressing a piston to sharply increase the surrounding fluid pressure. This piston does cause large and abrupt pressure fluctuations, but it is limited by the supply air pressure (125psi) and ratio of sizes of piston diaphragms on the air / liquid side (4:1). This limits the maximum pressure the piston can supply to 500 psi plus any dynamic effects of "air hammer" which are quite negligible compared to the 500 psi static pressure. With the 2,500 psi working pressure and 10,000 psi burst pressure, we can safely assume these pressure fluctuations do not negatively affect the hose.
        ii. SAE states a reduction in life cycles does not become apparent unless surges exceed 133% the rated pressure, where the life would then become 200,000 cycles[12].
5. IMPROPER END CRIMPS
    a. NOT A PLAUSABLE CAUSE OF FAILURE
        i. End crimps were examined and shown to be in good order, and not found to be leaking.
6. VACUUM SERVICE
    a. NOT A PLAUSABLE CAUSE OF FAILURE
        i. The failed hose is a vacuum rated hose, to 28" Hg, (-13.8 psig). The COUPP experiment is incapable of producing a vacuum, atmospheric pressure is the lowest pressure which could be seen in the hose during operation. A partial vacuum was pulled on the hoses before backfilling with fluid, though this is a single event and not considered "vacuum service".

7. CHEMICAL RESISTANCE

a. SLIGHT POSSIBLE CONTRIBUTOR TO FUTURE FAILURES

i. Visual inspection of the interior of the hose shows no obvious signs of chemical degradation. The failed hose was brought to a local hydraulic hose shop where personnel stated they saw no signs of chemical corrosion which would include pitting or flaking of the interior surface.

ii. Physical bending of the hose shown it is still quite ductile as it can be bent and creased without fracture. This shows the fluid in contact with the hose did not cause the inner core to become brittle

iii. The fluid in the hose is a 95% inhibited propylene glycol, an MSDS[7] can be found in ATTACHMENT #4. The parker hose catalog [5] shows chemical compatibility of the hose for many materials, some of which are listed in Table 2.

Table 2: Chemical Compatibility of hose with several fluid media.

Parker Paraflex 560	Inner Core Polyester	Outer Jacket Urethane
Propolene Glycol	Not-Tested	Good
Ethylene Glycol	Limited	Limited
Water to 135F	Good	Good
Water above 135F	Poor	Poor
Water-Glycols to 135F	Limited	Limited
Water-Glycols above 135F	Poor	Poor

Here we can see the hose in service was not tested with propylene glycol, but shows limited use with ethylene glycol and water-glycol mixtures. Water glycol mixtures are defined as water mixed with ethylene, diethylene, or propylene glycol[8].

iv. Carlisle[10] lists the chemical compatibility of polyester and propylene glycol as “Satisfactory” on a scale of Satisfactory/Marginal/Unsatisfactory. There are many types

of polyester though, some with better chemical resistance than others, where one rating for all types is not definitive of the hose material

v. Parker lists the inner core material as elastomeric polyester, which is a multi-block copolymer. Holden[9] states: "The segments with polyester elastomeric segments are tougher and have better resistance to abrasion, swelling by hydrocarbon oils, and oxidative degradation (than other multi-block copolymers)."

vi. Cole-Parmer[11] lists the chemical compatibility of several materials with propylene glycol as seen in Table 3.

Table 3: Chemical compatibility with propylene glycol.

Compatability with Propylene glycol	
Material	Rating
Buna	A
EPDM	A
NYLON	A
Natural Ruber	A
Neoprene	C
Polycarbonate	B-1
Polypropylene	A-2
PVC	C-1

Where:

1. Satisfactory to 72°F (22° C)
2. Satisfactory to 120°F (48° C)

A = Excellent.
B = Good -- Minor Effect, slight corrosion or discoloration.
C = Fair -- Moderate Effect, not recommended for continuous use. Softening, loss of strength, swelling may occur.
D = Severe Effect -- Not recommended for **ANY** use.

vii. Polyester is a category of polymers which contain the ester functional group in their main chain, and polycarbonate is a

polyester. The above rating for polycarbonate gives us the most relevant, but not definitive, definition of the chemical compatibility of the hose. Since Parker makes a line of hoses (540N series) with a nylon core instead of polyester, a switch to this type of hose would yield the most confidence in preventing any chemical compatibility issue. Though like previously mentioned there are no obvious signs of corrosion or degradation of the interior of the inner core.

8. MANUFACTURING DEFECTS
    a. NOT A PLAUSABLE CAUSE OF FAILURE
        i. Examination of the hose at the failed area shows no visible signs of any defects. Inner core wall thickness is consistent with the rest of the hose, at 0.055".
9. IMPROPER OR MULTI-PLANE BENDING
    a. MOST PLAUSABLE CAUSE OF FAILURE
        i. Immediate examination of the type of failure indicates a bending type failure. A failure due to hose over pressure would damage the braid, and result in a longitudinal split in the inner core of the hose. The perfect example of an overpressure failure is the failure of this same hoses outer jacket, which failed due to overpressure just as described and split longitudinally. Bending of a cylindrical object, the hoses inner core, causes the stress in the object to be non-uniform, where the part of the object on the outside of the bend is in tension, and the inside of the bend is in compression. This would result in the outside of the bend being the most prone to failure as it is being pulled or torn open, since this is the area of the highest normal and shear stresses. Failure would occur starting directly on top of the outside of the bend, somewhere near the connector, see Figures 7 and 8, (the transparent area is the hose connector).

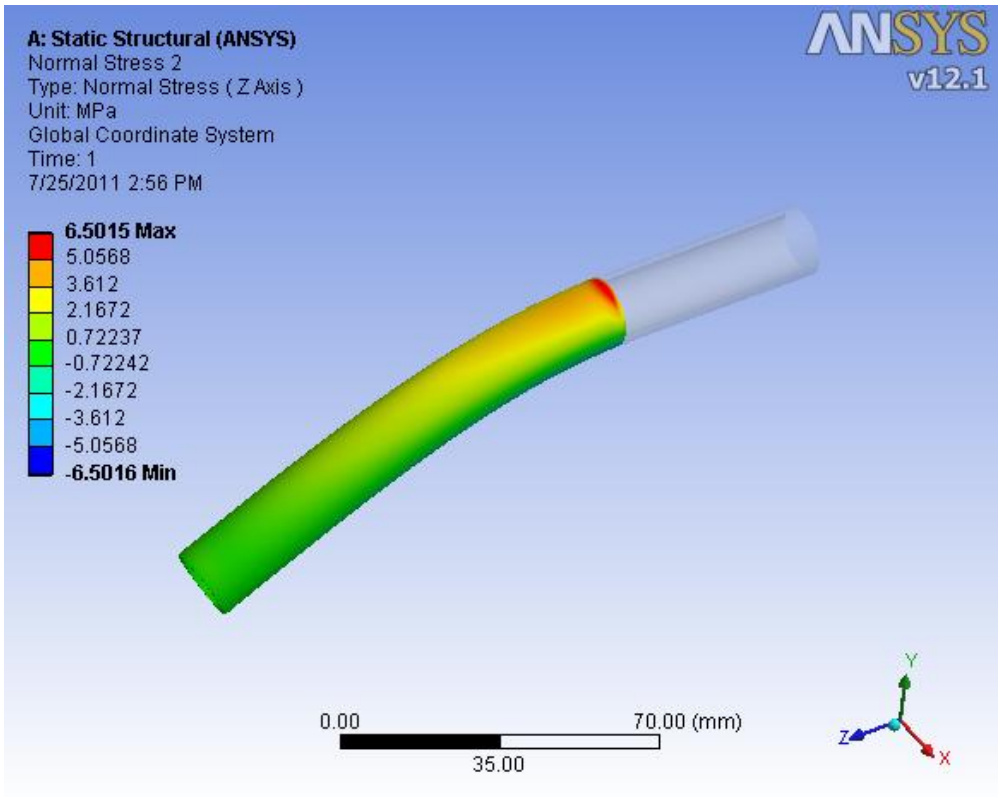

Figure 7: Maximum normal stress greatest on outside of bend near connector.

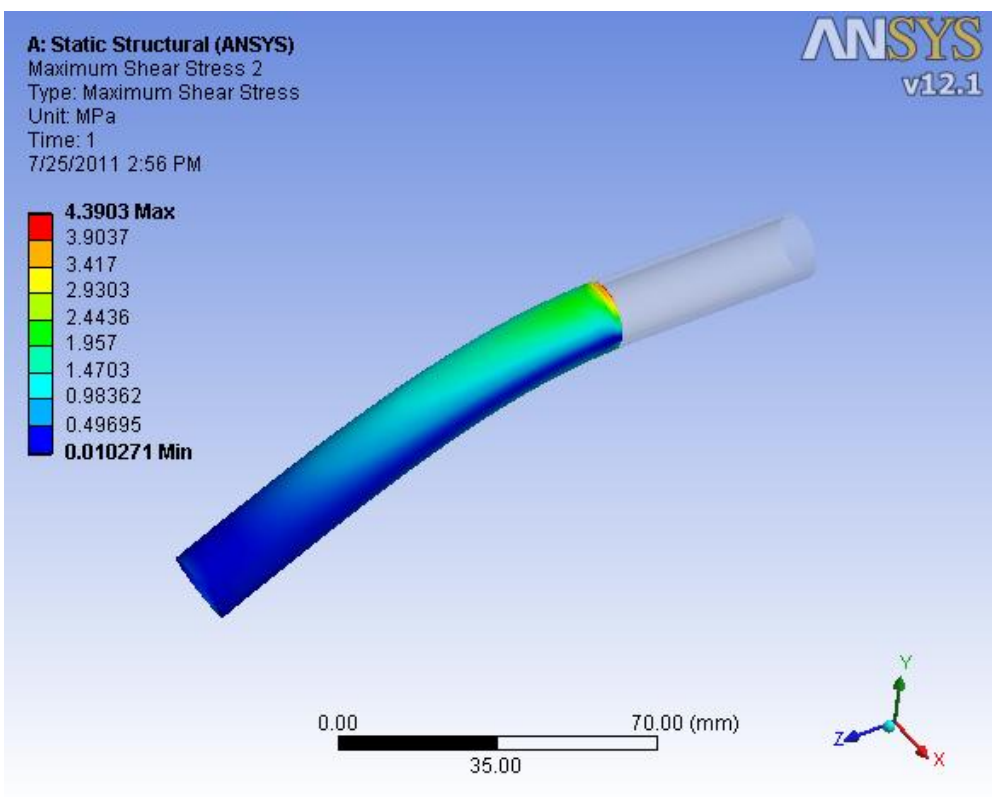

Figure 8: Maximum shear stress on outside of bend near connector.

Once even the smallest hole or split develops in this area of the outside of the bend, it becomes a stress concentration, which greatly increases the stress at each end of this split. The stress concentration results in sagittal tearing of the hose from the center of the split out across the top of the hose, see Figures 9 and 10. The end effect of this type of failure would look just like our hose failure specimen from Figures 5 and 6.

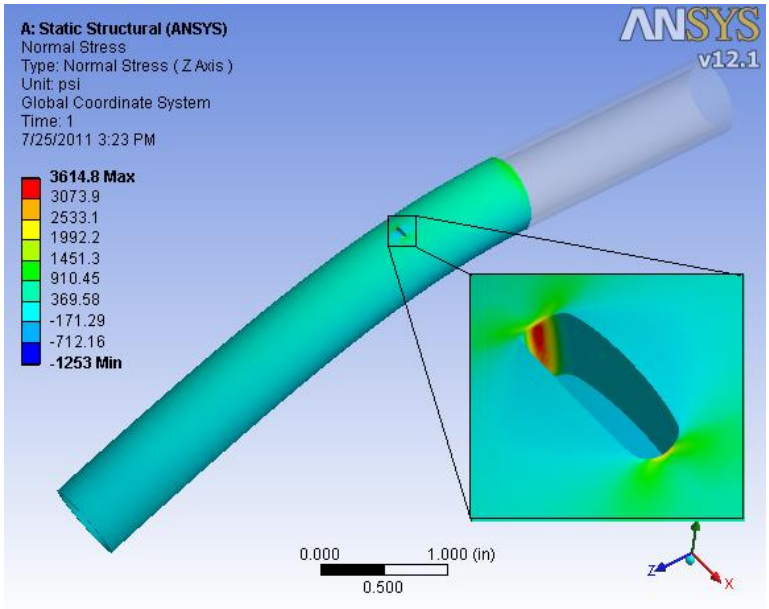

Figure 9: Stress concentration effects of small split in hose increasing normal stress.

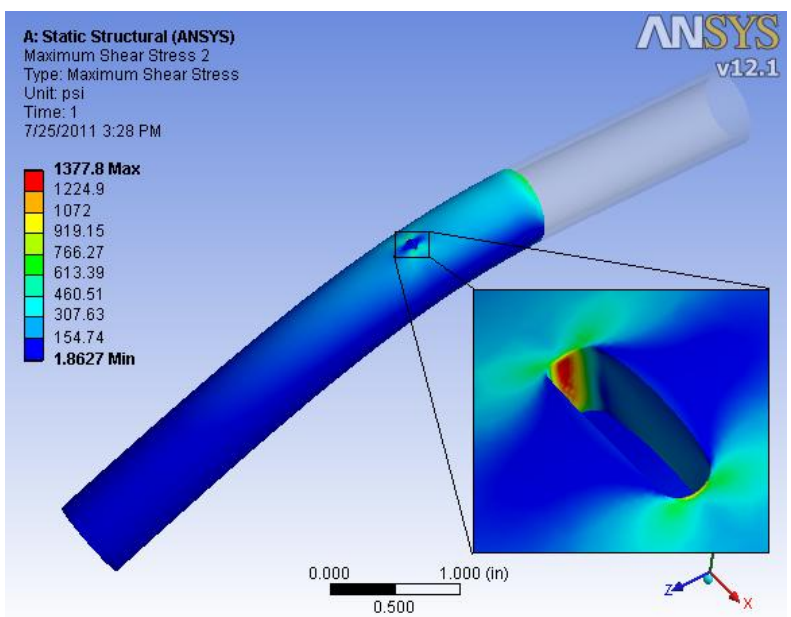

Figure 10: Stress concentration effects of small split in hose increasing shear stress.

ii. Bending a hydraulic hose in more than one plane results in twisting of its wire reinforcement. A twist of five degrees can reduce the service life of a high-pressure hydraulic hose by as much as 70% and a seven degree twist can result in a 90% reduction in service life.[1]

iii. Inspection of the hose shows it was not bent beyond its minimum bend radius. General hydraulic hose assembly installation guidelines require different requirements for the hose area in close proximity to the connecter than minimum bend radius, reasons apparent in the previous FEA analyses. Alfagomma[13] recommends a minimum straight length from the hose fittings of 6" for a hydraulic hose with an inner diameter of ½". The most accentuated bends resulting from the non-compliance of this requirement may cause leaks, hose breaking or terminal loosening, see Figure 11.

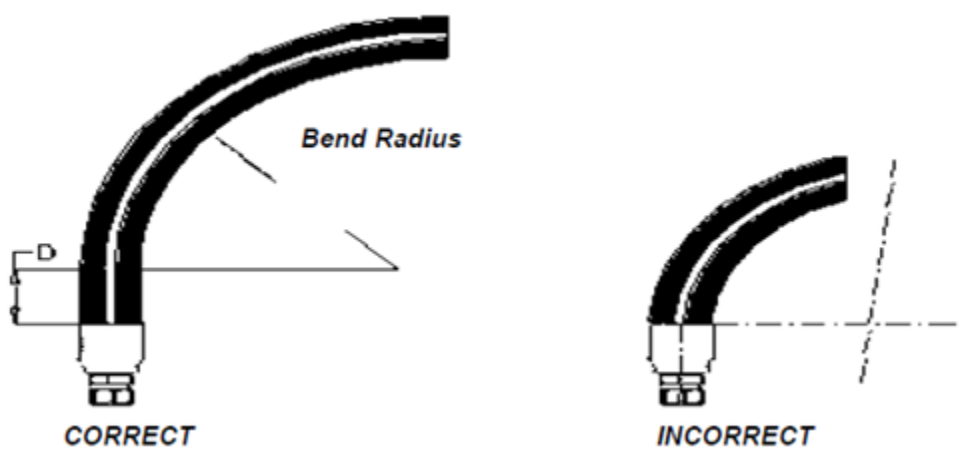

Figure 11: Proper installation near hose terminals.

iv. It is obvious by examining our failed hose that this installation criteria was not met. We can see in Figure 12, the plastic

deformation of the hose begins at the connector and these breakages are both inside this 6” critical area.

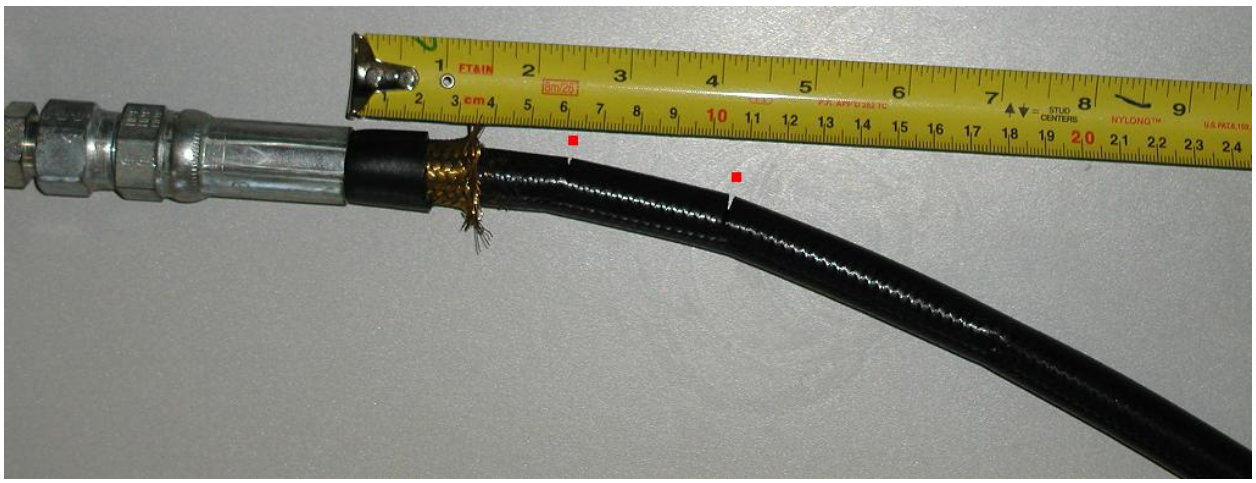

Figure 12: Straight length near connector not satisfied, causing breaks in critical area.

v. Parker[5] states hoses should be installed with elbows or other adapters to ensure multi-plane bending is prevented, which includes bending in only one plane to avoid twisting, see Figure 13.

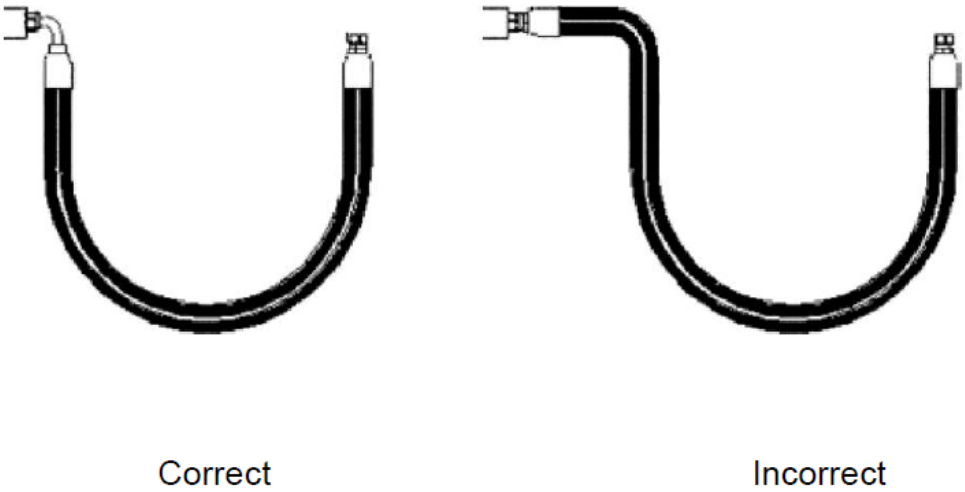

Figure 13: Use of elbows to ensure multi-plane bending or twisting is prevented.

vi. The failed hose had many bends in several planes and was not installed under the standard guidelines. The hose was routed coming off of MV-27 where it had a 180 degree bend right off the first connector, followed by another 360 degree loop since the hose was much too long for the application. The hose then proceeded down to the floor where there was a ninety degree bend routing the hose across the floor, followed by another 90 degree bend up into the valve MV-36. Proper installation would be a much shorter hose with hard piping and elbows at the connection points and throughout the many bends throughout the route.

V. FAILURE ANALYSIS CONCLUSION

We can say with confidence this specific hose failure was due to bending stresses near the connection points. We have shown the proper installation guidelines of straight lengths of hose near connections, and bending hoses in only one plane were not followed when this hose was installed. We have demonstrated using finite element analysis how bending stresses would result in high stresses and breakage on the outside of the bend near the connector, and how the hose would subsequently tear sagittally across the hose, exactly as our failure specimen has failed. We have extinguished all other failure modes, and have found the chemical compatibility of polyester and propylene glycol is satisfactory but not ideal. Though considered not to be a contributor to this specific failure, changing the systems polyester hoses to Parker 540N series hoses or equivalent nylon or EPDM core hoses is recommended. This would be a better material choice since these materials are listed as having excellent compatibility with propylene glycol.

VI. RECCOMMENDATIONS TO PRECLUDE RECURRANCE

- All hoses not installed according to the recommended procedures should be replaced with nylon or EPDM core hoses. The original hoses should be discarded since their strength is already compromised due to improper installation. The new hoses shall be installed in such a way that eliminates multi-plane bending, twisting, excessive bends, and must be sized to the proper hose length.
- Hard pipe with elbows should be used wherever possible, the area of this hose failure shall be replaced by hard pipe which would result in the flexible hose having no more than two ninety degree bends, both of which must be in the same plane. The hoses must also have straight lengths near connectors which exceed the sum of the hoses minimum bend radius plus the outer diameter. Hoses must be secured with clamps to prevent any external physical abuse.
- If absolutely necessary for a hose to follow a compound bend, it shall be secured with a clamp into two separate segments, each of which only flex in one plane, see Figure 14.

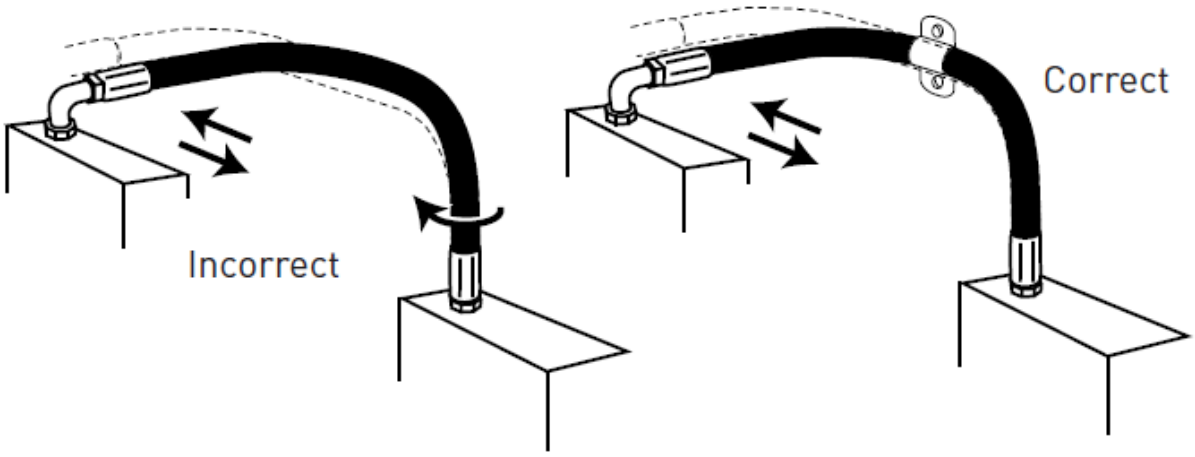

Figure 14: Segmenting hose to prevent multi-plane bending. [5]

- Hydraulic hoses have finite life, so visual inspections of the hoses should be performed at least every six months. An assembly with moving parts would require more frequent inspections, since the COUPP-60 experiments hoses are static, clamp loosening is expected to be quite infrequent. This inspection shall ensure the hose assembly is still in the correct "as installed" position, and the securing clamps are still properly supporting the hose. Any hoses found not in compliance with the recommended practices shall be immediately replaced and the cause of the hose movement investigated.

REFERENCES

1. http://www.insidersecretstohydraulics.com/hydraulic-hose.html

2. http://www.enargas.gov.ar/Gnc/Normativa/Eng/NagE_409.pdf

3. http://www.plantengineering.com/search/search-single-display/nine-reasons-why-hydraulic-hoses-fail/f497ef39ef.html

4. ftp://www-ppd.fnal.gov/ppd-md-dwg/DWGS/MECH_444/pdf/444682-J1.pdf

5. http://www.parker.com/literature/Parflex/B-Parflex%20PDF%20and%20Images/4660WEB-Aug2007-BKMARK.pdf

6. http://www.buychemicalsdirect.com/v/vspfiles/assets/images/95.pg.msds.pdf

7. http://www.buychemicalsdirect.com/Inhibited-Propyelne-Glycol-55-Gallons-p/inhibited-pg-55gal.htm

8. http://www.engineersedge.com/lubrication/water_glycol_hydraulic_fluid.htm

9. Holden, G. *Thermoplastic Elastomers*. Munich: Hanser, 1996. Print.

10. http://www.carlislefsp.com/files/solventguide.pdf

11. http://www.coleparmer.com/techinfo/chemcomp.asp

12. SAE International, *Cumulative Damage Analysis for Hydraulic Hose Assemblies.* Standard SAE-J1927, 2009.

13. http://kuriyama.thomasnet.com/Asset/H%20Engineering%20Data.pdf