Fermilab

Particle Physics Division
Mechanical Department Engineering Note

Number: MD-ENG-352 Date: 30 June 2011

Project Internal Reference:

Project: NOVA

Title: NOVA Ash River Pivoter Steering System Stresses

Author(s): Kyle Beczkiewicz

Reviewer(s): Dave Pushka

Key Words: NOVA, Ash River, Pivoter, Steering

Applicable Codes:

Abstract Summary:

The following engineering note provides an analysis of the stresses on the Ash River pivoter steering system proposed in MD-ENG-341.

This engineering note analyzes the stresses that result from the use of hydraulics in the top and bottom weldments of the NOVA Ash River block pivoter steering system. The top and bottom weldments were modeled using the I-DEAS 3-d modeling and finite element analysis software.

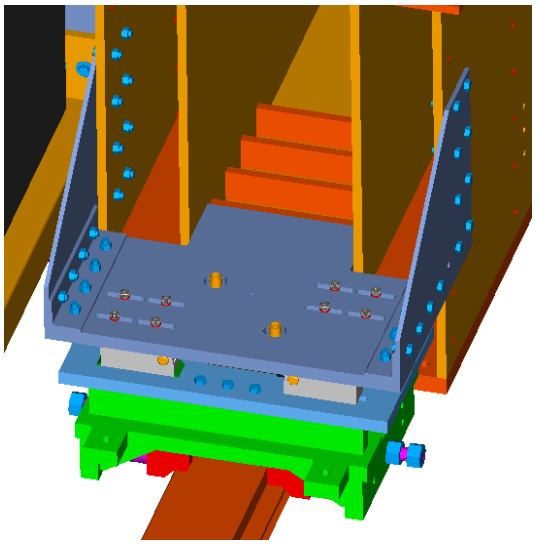

Fig. 1: Steering Assembly

Top Weldment

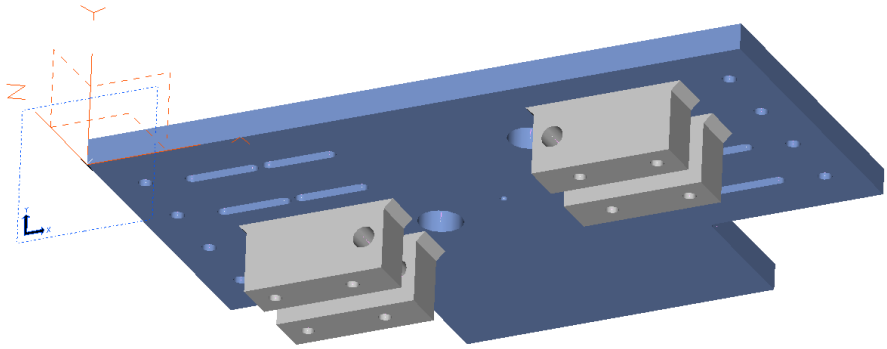

Fig. 2: Steering Assembly Top Weldment

After the weldment was modeled, it was constrained and meshed. Constraints were added to the model to restrict translation and rotation based on the weldment's attachment to the surrounding pieces. The edges of the plate were constrained to restrict translation in all directions and rotation in all directions. The bolt holes in the thrust block were constrained to restrict translation in the direction of the y- and z-axes and rotation about the x- and z-axes. These constraints simulate the restrictions created by the bolts that would connect the thrust blocks to the bottom weldment. The holes along the edges were also constrained to restrict translation in the direction of the x-, y-, and z-axes and rotation about the x- and z-axes, based on their connection to the angle pieces.

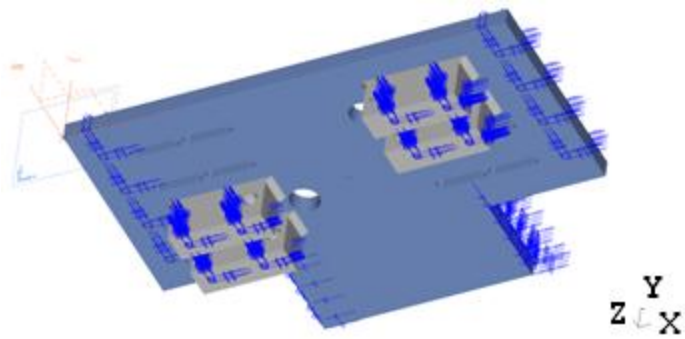

Fig. 3: Top Weldment Constraints

Three different sets of loads were added to the model. Two of the three sets of loads involved a 50,000 lb. load acting through one pair of thrust blocks to simulate the force created by the steering hydraulics. The other load set had two different pairs of 50,000 lb. forces acting through the thrust blocks in opposite directions.

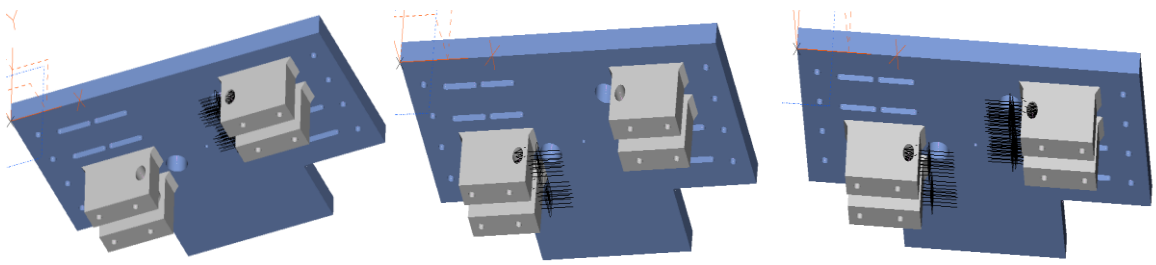

Fig. 4: Top Weldment Loads: Right, Left, and Both

For the load applied to the right side of the weldment, the maximum stress was 23.2 ksi and the maximum deflection was 0.003 in. For the bolt holes experiencing bearing stress, the allowable bearing stress is

$$F_p = 1.2 * F_u$$

For ASTM A36 Steel, F_u = 58 ksi. Therefore, the allowable stress is 69.6 ksi. The maximum stress in the weldment is well below the allowable level of 69.6 ksi

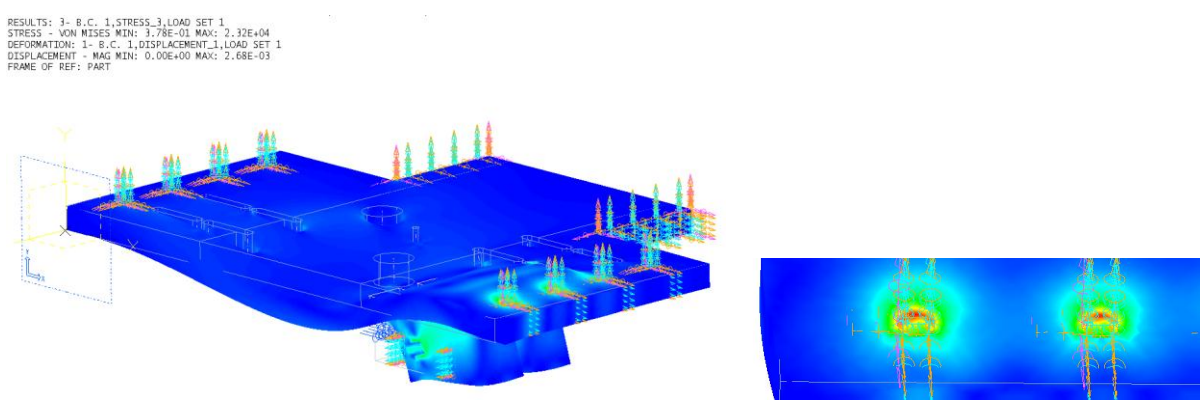

Fig. 5: Right Side Loading Results and Maximum Stress Location

For the load applied on the left side thrust blocks, the maximum stress was 23.3 ksi and the maximum deflection was 0.003 in. The maximum stress occurred inside the bolt holes that are used to connect the thrust blocks to the bottom weldment. Due to the fact that there will be bolts inside these holes reducing the amount of deformation that would actually occur, it can be assumed that these stresses will be lower than shown in the model. Other areas of high stress include the bolt holes along the edge of the plate and the fillet at the corner of the plate. The maximum stresses in those areas were below the allowable stress.

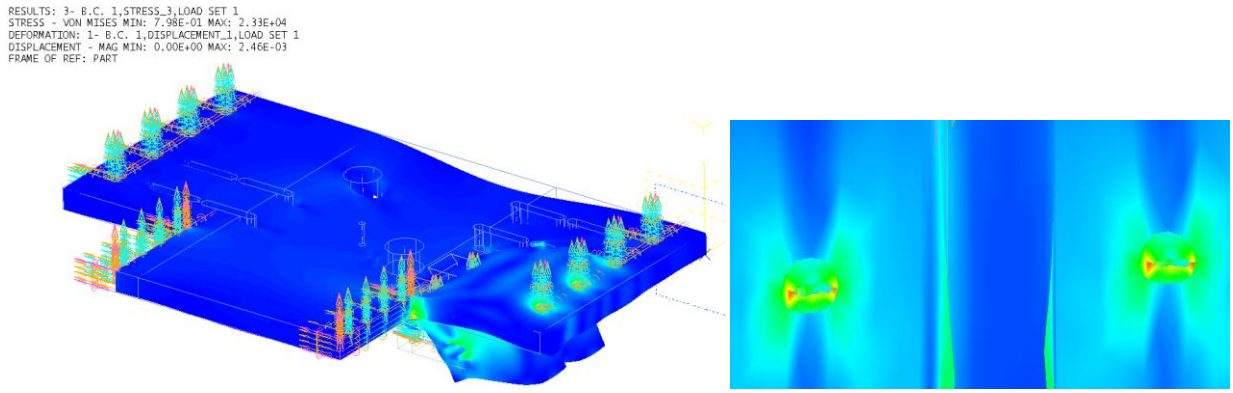

Fig. 6: Left Side Loading Results and Maximum Stress Location

For the loads applied on both pairs of thrust blocks, the maximum stress was 24.9 ksi and the maximum deflection was 0.003 in. The maximum stress present in this model was also well below an allowable bearing stress of 69.6 ksi.

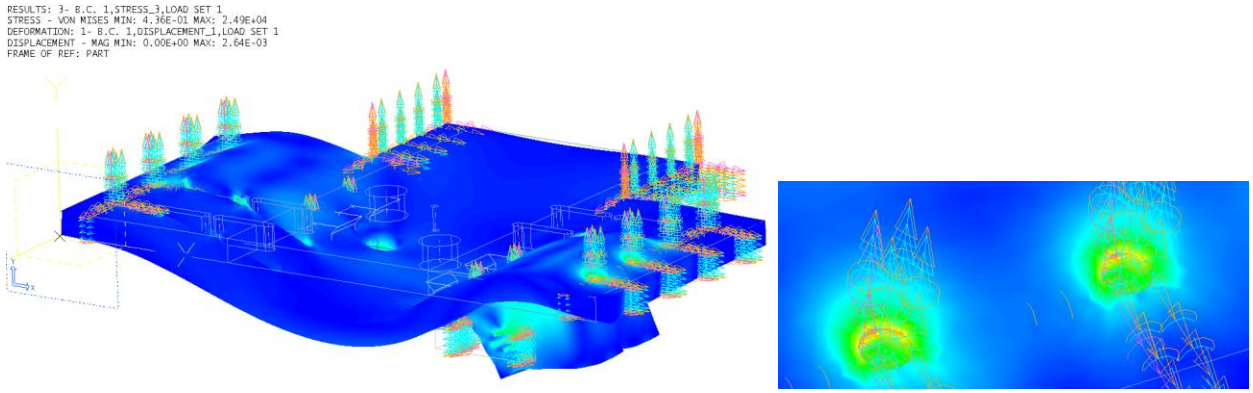

Fig. 7: Loading on Both Sides and Maximum Stress Location

The resulting stresses and deflections for the three loading conditions were all very similar. In all three cases, the maximum stresses occurred in areas where bearing stress would be present. The values for stress determined in these areas fell well below the allowable value.

It should also be noted for both this section and the next, that, according to AISC: Allowable Stress Design, it is not the intent that highly-localized stresses that are present in a computer-aided analysis must necessarily fall below the allowable stress, and that it is up to the engineer's discretion (AISC Manual of Steel Construction: Allowable Stress Design, 9th Ed. Sec. C-A5.1 Allowable Stresses, p. 5-127).

Bottom Weldment

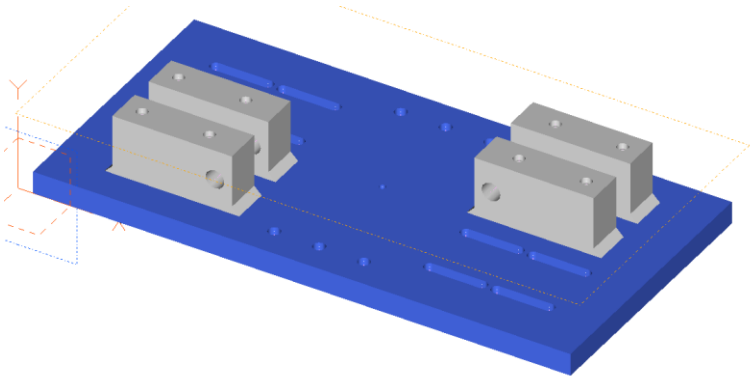

Fig. 8: Steering Assembly Bottom Weldment

The bottom weldment was constrained in the following manner. Constraints were added to the 6 holes in the center of the plate, restricting translation in the direction of the x-, y-, and z-axes and rotation about the x- and z-axes. These constraints simulate the plate being bolted to the cam follower assembly. Constraints were added to the holes in the thrust blocks restricting translation in the direction of the y- and z-axes and rotation about the x- and z-axes. Finally, constraints were added to the slots on the left and right sides to restrict translation in the direction of the y- and z-axes and rotation about the x- and z-axes. The last two pairs of constraints simulate the thrust blocks and plate being bolted to the plate and thrust blocks and plate from the top weldment.

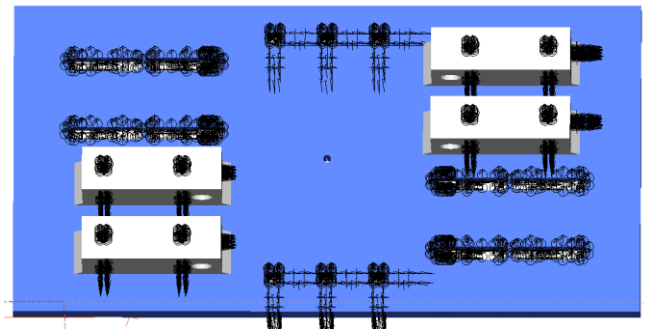

Fig. 9: Bottom Weldment Constraints

Three different sets of forces were modeled. Two sets included a 50,000 lb force acting through one of the pairs of thrust blocks. The last set of forces involved 50,000 lb forces acting through both the left and right pairs of thrust blocks in opposite directions.

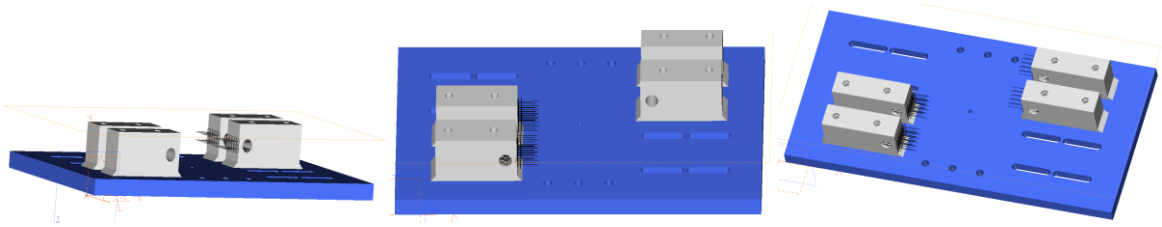

Fig. 10: Bottom Weldment Loads: Right, Left, and Both

For a load applied on the right side thrust blocks, the maximum stress was 36.3 ksi and the maximum deflection that resulted was 0.003 in. Based on the previous calculation for allowable bearing stress, the maximum stress present in this model is below the allowable stress.

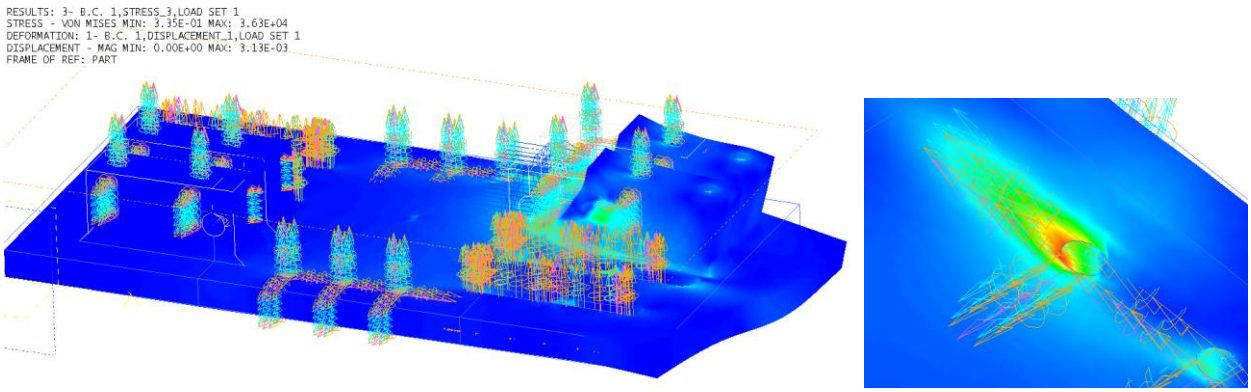

Fig. 11: Right Side Loading Results and Maximum Stress Location

For the load applied on the left side thrust blocks, the maximum stress that resulted was 35.2 ksi and the maximum deflection was 0.003 in. Similar to previous sections, the highest stress is present for a bolt hole undergoing bearing stress. The maximum stress in this case is also below the allowable stress.

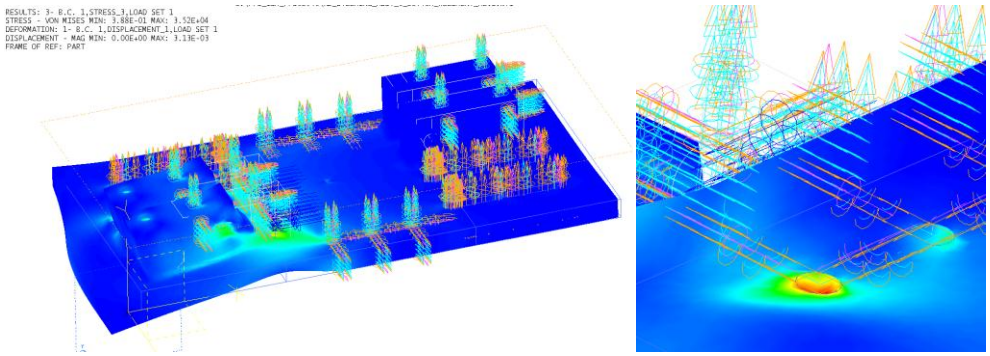

Fig. 12: Left Side Loading Results and Maximum Stress Location

For a load applied on both thrust blocks, the maximum stress that results is 32.1 ksi and the maximum deflection is 0.003 in. Like in previous sections the maximum stress occurs for a bolt hole in bearing. The maximum stress in this case is below the allowable bearing stress.

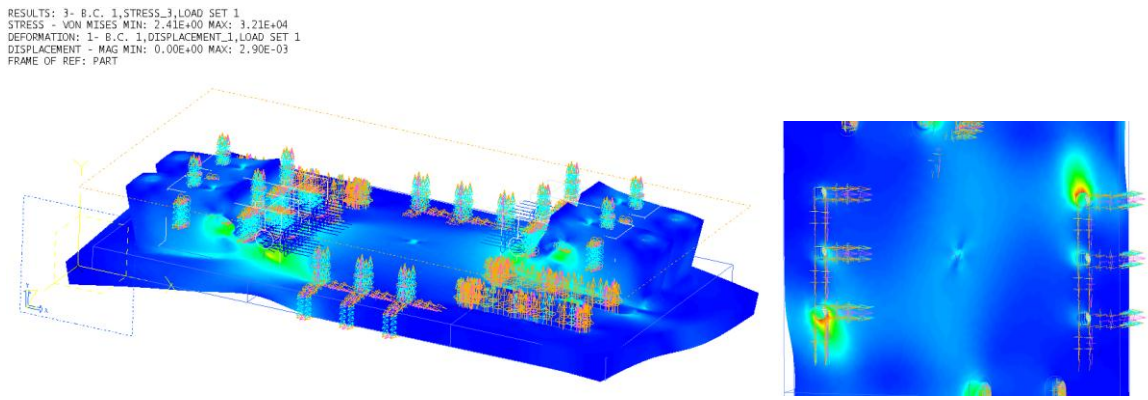

Fig. 13: Loading on Both Sides and Maximum Stress Location

For all three loading conditions, the maximum stress present in the model occurred for bolt holes undergoing bearing stress and the value given is below the allowable value.