Fermilab

Particle Physics Division
Mechanical Department Engineering Note

Number: MD-ENG-347 Date: 15 June 2011

Project Internal Reference:

Project: Lab C Rooftop HVAC Access

Title: Structural Analysis of Lab C Wide Flange Beams and Bolts for Safety of Maintenance Personnel

Author(s): Bianca Brandveen

Reviewer(s): Dave Pushka

Key Words: Fall Protection, Travel Restraint, Tie-off point Certification

Applicable Codes:

1. AISC Manual of Steel Construction, Allowable Stress Design. Ninth Edition.
2. FESHM 5066
3. ANSI Z359

Abstract Summary:

This Engineering Note includes calculations of stresses in the wide flange beams directly above and below the roof of Lab C. The air conditioner unit on the roof needs to be serviced. Since this A/C unit is situated close to the edge of the building, precautions must be taken to ensure the safety of maintenance personnel. A fall restraint system (also known as "travel

restraint system”) will be installed to prevent these workers from walking too close to the building’s edge.

According to FESHM 5066, fall restraint systems prevent the user from falling any distance and consist of a body harness, anchorage, connectors, lanyard, and other necessary equipment. FESHM 5066 also states that “The anchorage should be able to withstand a minimum force of 1000 pounds.” Therefore, the structural analysis was performed with a 1,000 pound maximum load.

PPD ES&H Department has acquired a Miller ShadowLite series beam anchor which will be attached to the top-most flange of the exterior wide flange HVAC support beams on the roof. This anchor is designed to carry a 5,000 pound load.

There are a total of four steel beams. The two beams inside of the roof are W24 x 68, and the two exterior beams are W8 x 31. The interior beams run North to South, and the exterior beams run East to West.

The structural analysis was performed according to the AISC “Allowable Stress Design” code. The results show that all of the beams and bolts are able to withstand the 1,000 pound load safely, and while not exceeding the allowable stress limits.

GIVEN:

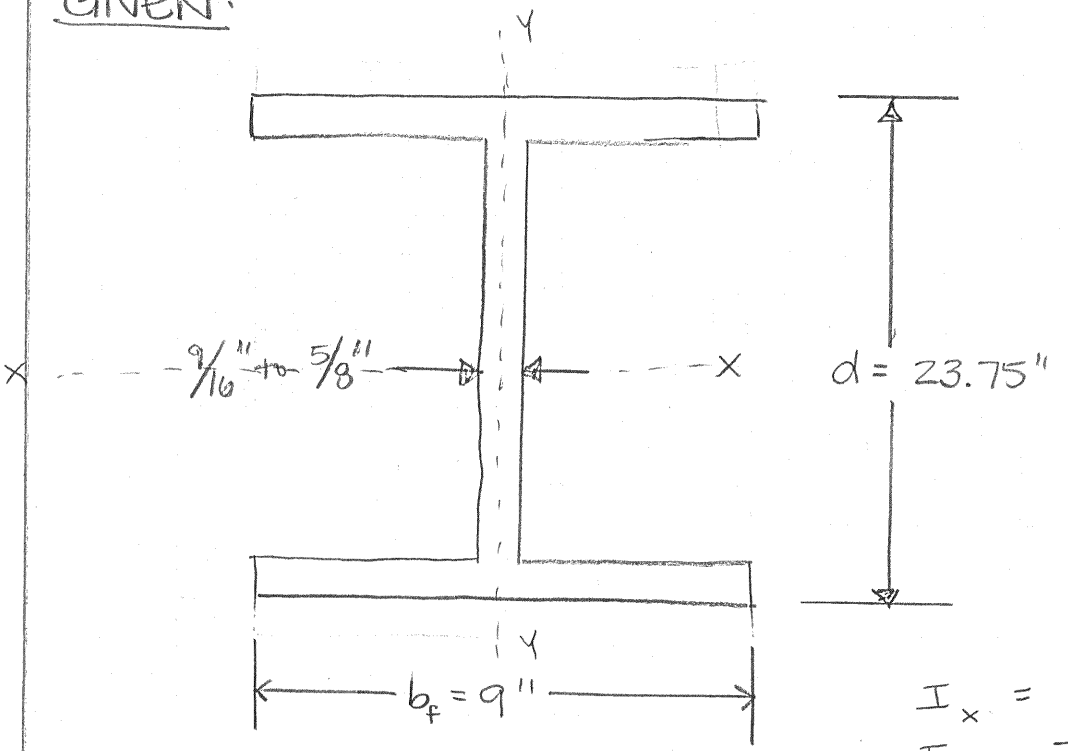

$I_x = 1830 \text{ in}^4$

$I_y = 70.4 \text{ in}^4$

(MEASURED VALUES FROM INTERIOR I-BEAM)

FROM MANUAL OF STEEL CONSTRUCTION: ALLOWABLE STRESS DESIGN, THIS IS A W24 x 68 I-BEAM (PAGE 1-18)

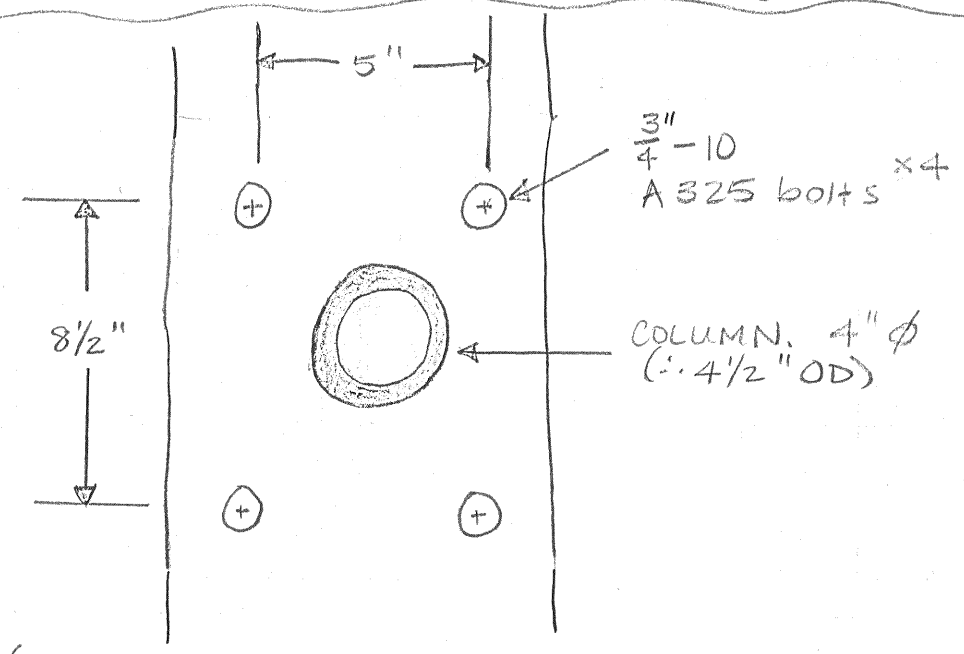

(TOP VIEW OF INTERIOR I-BEAM SHOWING COLUMN AND BOLTS.)

$L_c = 22"$ (LENGTH OF COLUMN FROM CONNECTION TO I-BEAM TO RUBBER PIECE ON THE ROOF.)

** I-BEAM ON ROOF HAS DIFFERENT DIMENSIONS (W8x31)
$I_x = 110 \text{ in}^4$, $I_y = 37.1 \text{ in}^4$

(TOP VIEW LAYOUT OF FACILITY BENEATH THE ROOF)

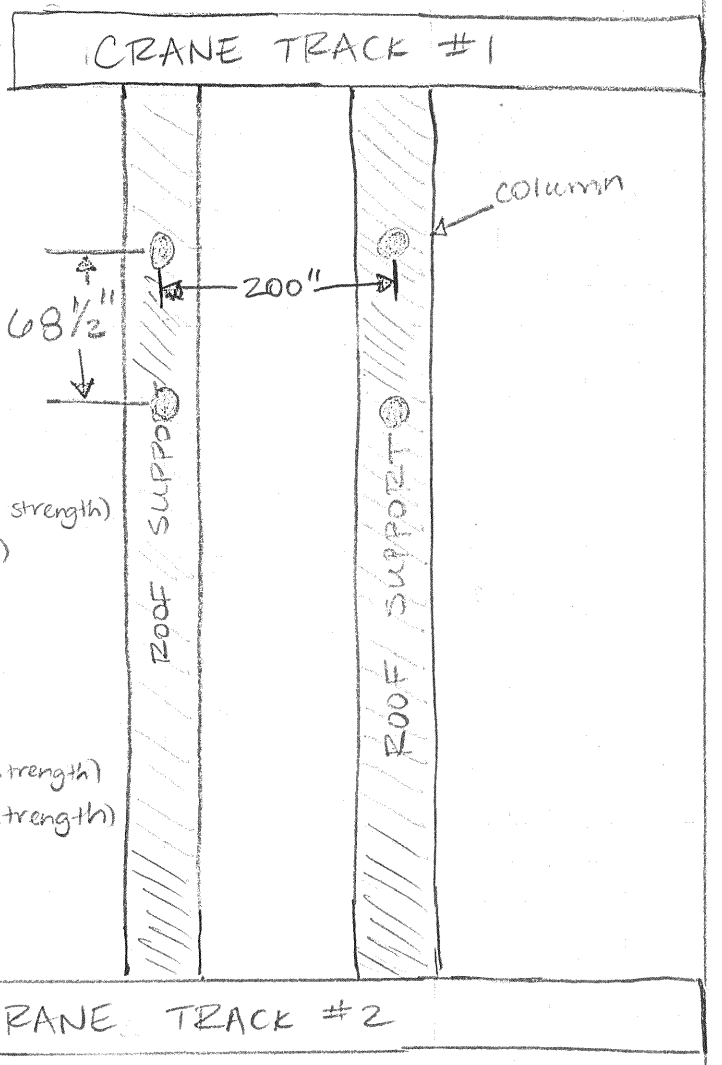

MATERIAL PROPERTIES:

A36:
$E = 2.9E4$ ksi
$\rho = 0.28$ lbm/in^3
$F_u = 58$ ksi
$F_y = 36$ ksi
$\nu = 0.26$

A53:
$E = 2.9E4$ ksi
$S_u = 60$ ksi (Min. Ultimate tensile strength)
$S_y = 35$ ksi (Min. yield strength)

ASTM 325 (bolts):
$F_t = 44$ ksi (tension)
$F_v = 17$ ksi (shear)

$S_t = 120$ ksi (Min. Tensile strength)
$S_y = 92$ ksi (Min. yield strength)

NOTE: NOT TO SCALE.

MATERIAL: I-BEAMS ARE ASTM A36. Columns are ASTM A53 Grade B pipe, schedule 40.

NOTE: CRANE IS RATED TO LIFT 7½ TONS. (NO LONGER IN OPERATION).

FIND: IS THIS SYSTEM SUFFICIENT SUCH THAT TWO WORKERS CAN TIE SAFETY HARNESSES TO THE ROOF AND MEET OSHA REQUIREMENTS?

SINCE AT LEAST 2 WORKERS ARE REQUIRED TO DO A JOB, WE WILL TEST FOR THE FOLLOWING:

(*) BOTH WORKERS TIE OFF TO ONE BEAM.
FORCE = 2,000 lb. (1,000 lb. per worker)

* THE FORCE LISTED IS THE "MINIMUM TENSILE LOAD APPLIED TO THE DEVICE WITH THE LIFELINE OR LANYARD IN THE FULLY EXTENDED POSITION." (OSHA, CONSTRUCTION SAFETY AND HEALTH OUTREACH PROGRAM website)
www.OSHA.gov/doc/outreachtraining/htmlfiles/subpartm.html

* SAFETY HARNESSES MAY ALSO BE CALLED "PERSONAL FALL ARREST SYSTEMS".

FAILURE MECHANISMS:

WE ARE CONCERNED ABOUT THE FOLLOWING POSSIBLE FAILURE MECHANISMS:

1) BENDING of column

2) Weak axis BENDING of I-beams

3) TENSION + SINGLE SHEAR in bolts (combined loading)

* ALLOWABLE STRESS OF I-BEAMS AND OTHER FLEXURAL MEMBERS ABOUT THEIR STRONG AXIS IS 66% of yield strength. (5-45) (σ_{all} = 23.1 ksi)

* ALLOWABLE STRESS OF I-BEAMS, SOLID BARS AND RECTANGULAR PLATES ABOUT THEIR WEAK AXIS IS 75% OF YIELD STRENGTH (5-48) (σ_{all} = 26.3 ksi)

SOLUTION:

1) BENDING of Column

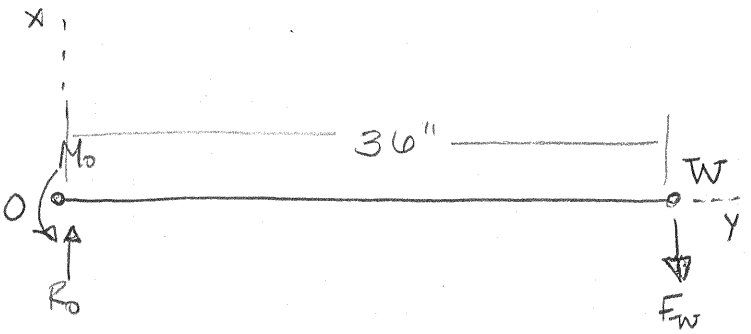

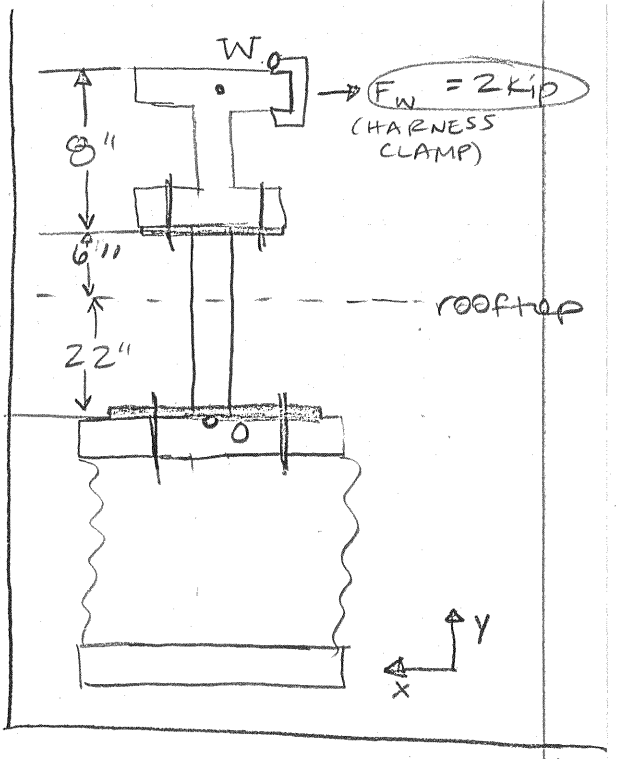

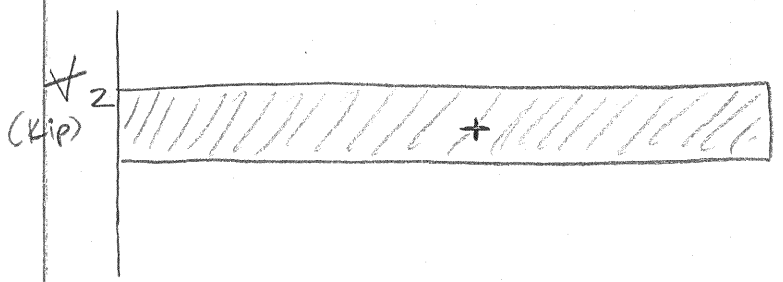

$\Sigma M_W = 0: \quad M_o - (2\ \text{kip})(36'') = 0$

$M_o = 72\ \text{kip}\cdot\text{in}$

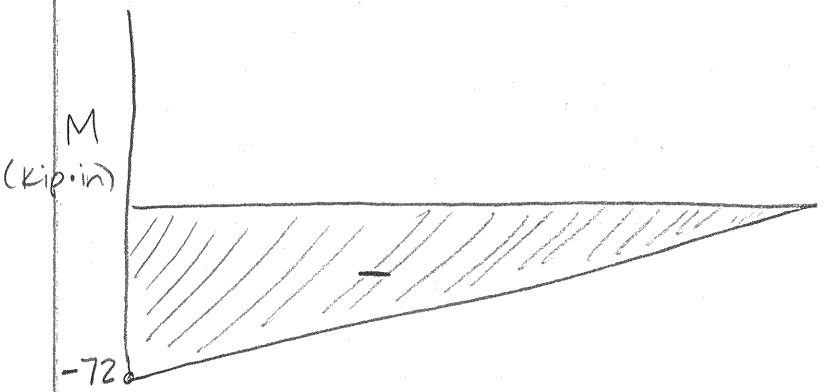

Maximum Deflection:

$$X_{max} = \frac{-F_W l^3}{3EI} = \frac{(-2\ \text{kip})(36'')^3}{3(2.9E4\ \text{ksi})(7.23\ \text{in}^4)}$$

$$= -0.148 \text{ inches}$$

$$\sigma_{max} = \frac{M_{max} y}{I} = \frac{(72\ \text{kip}\cdot\text{in})(2.25\ \text{in})}{7.23\ \text{in}^4} = 22.4\ \text{ksi}$$

$\sigma_{max} = 22.4$ ksi, and $\sigma_{all} = 23.1$ ksi

$\boxed{\sigma_{max} < \sigma_{all} \quad \underline{\text{OK!}}}$

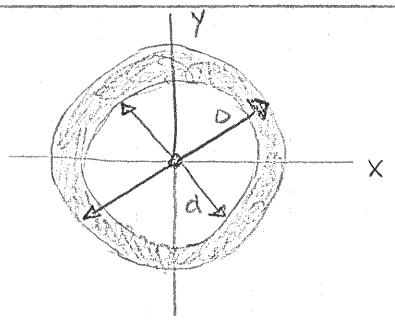

$$A = \frac{\pi}{4}(D^2 - d^2)$$

$$= \frac{\pi}{4}\left[(4.5\,in)^2 - (4.026\,in)^2\right]$$

$$\boxed{A = 3.17\,in^2}$$

$$I_x = I_y = \frac{\pi}{64}(D^4 - d^4)$$

$$= \frac{\pi}{64}\left[(4.5\,in)^4 - (4.026\,in)^4\right]$$

$$\boxed{I_x = I_y = 7.23\,in^4}$$

2a) <u>Weak axis BENDING of Exterior I-beam</u> (W8 x 31)

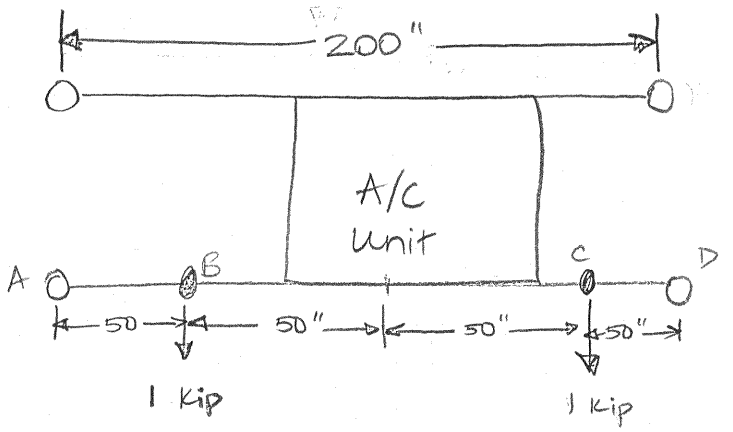

TOP VIEW OF ROOF, SHOWING A/C UNIT, I-BEAMS, AND 4 COLUMNS

FREE BODY DIAGRAM

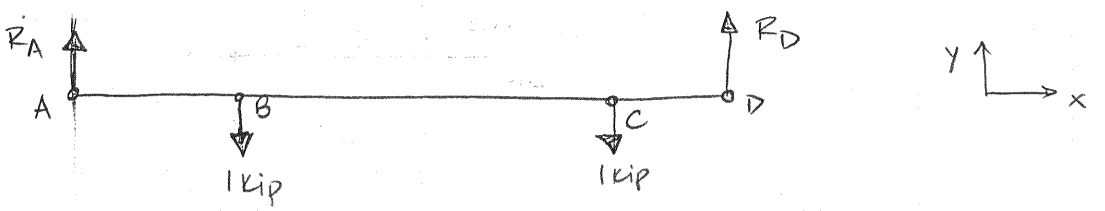

$$\Sigma F_y = 0: \quad R_A + R_D - 2\,kip = 0$$
$$R_A = 2\,kip - R_D$$

$$\Sigma M_A = 0: \quad (-1\,kip)(50'') + (-1\,kip)(150'') + (R_D)(200'') = 0$$
$$R_D = \frac{(50 + 150)\,kip\text{-}in}{200''} = 1\,kip$$

$$\therefore \; R_A = 1\,kip$$

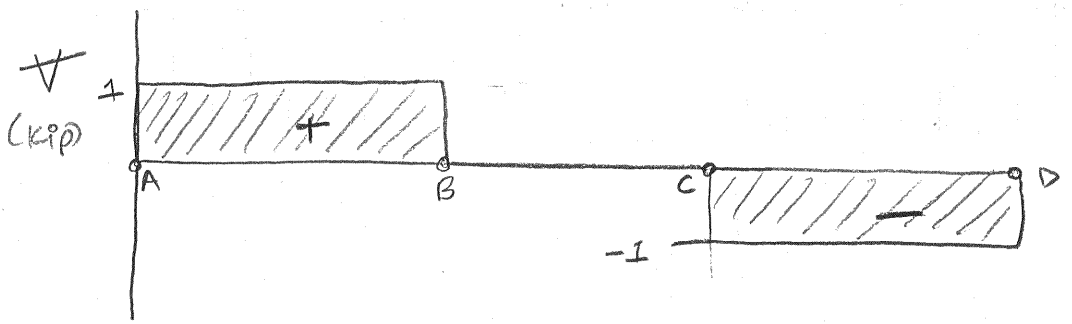

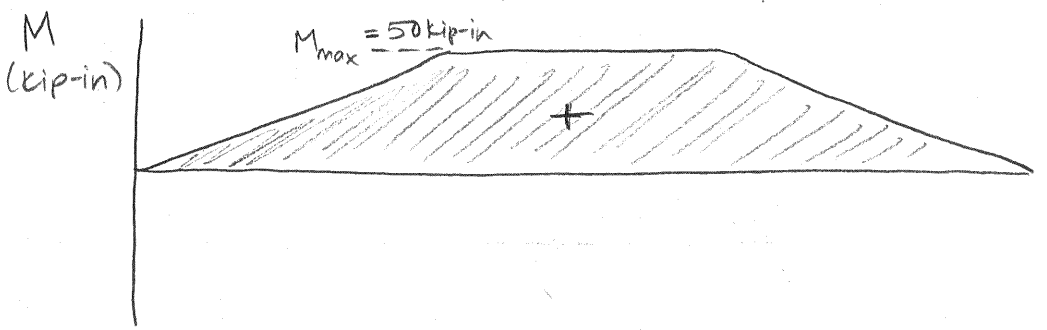

$$\sigma_{max} = \frac{M_{max}\, y}{I_y} = \frac{(50\text{ kip-in})(4\text{ in})}{37.1\text{ in}^4} = 5.39\text{ ksi}$$

$\sigma_{all} = 23.1$ ksi

$\boxed{\sigma_{max} \ll \sigma_{all} \quad \text{OK!}}$

2b) Strong axis bending of interior I-beam (W24x68)

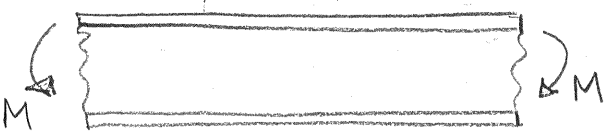

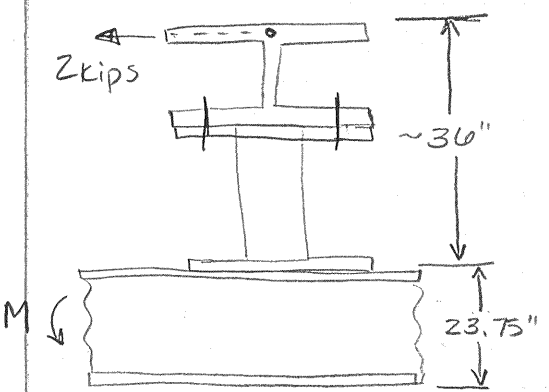

$$M = (2\text{ kip})(36'') = 72\text{ kip-in}$$

$$\sigma_{max} = \frac{My}{I_x} = \frac{(72\text{ kip}\cdot\text{in})(23.75/2\text{ in})}{1830\text{ in}^4}$$

$\sigma_{max} = 0.467$ ksi

$\sigma_{all} = (0.75)\,F_y = 26.3$ ksi

$\boxed{\sigma_{max} \ll \sigma_{all} \quad \text{OK!}}$

c) CAN THE BOLTS SUPPORT A 72 kip·in MOMENT?

$$\tau = \frac{F_B}{A_B}$$

Where $\begin{cases} A_B \text{ is the area of the bolt} \\ F_B \text{ is the force on the bolt.} \end{cases}$

$$M = F_B \cdot d \rightarrow F_B = \frac{M}{d}$$

A325 bolts with 3/4" ø

$\begin{cases} \text{Minimum proof strength} = 85 \text{ ksi} \\ \text{Minimum tensile strength} = 120 \text{ ksi} \\ \text{Minimum yield strength} = 92 \text{ ksi} \end{cases}$

$$A_B = \frac{\pi d^2}{4} = \frac{\pi (3/4")^2}{4} = 0.442 \text{ in}^2$$

Allowable loads (p. 4-5 and 4-3, respectively)

Shear: $F_{max} = 7.31$ kip (single shear) (For $F_v = 17.0$ ksi)

Tension: $F_{max} = 19.4$ kip for $F_t = 44$ ksi

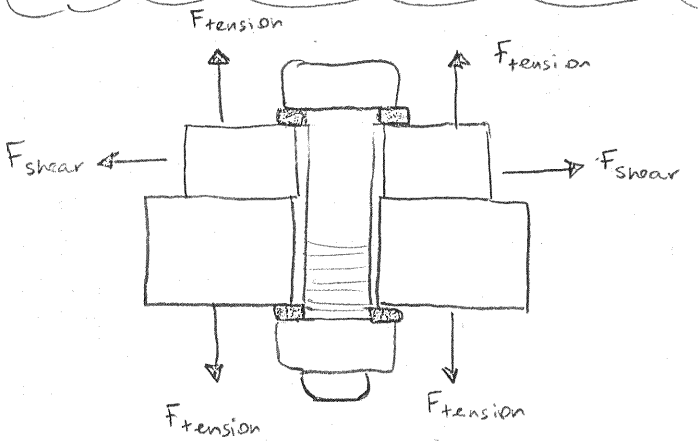

From pg. 4: M = 72 kip·in

$$F_{tens} = \frac{M}{d} = \frac{72 \text{ kip·in}}{8.5 \text{ in}}$$

$F_{tens} = 8.5$ kips

THIS LOAD IS DISTRIBUTED OVER 2 BOLTS, SO $\frac{F_{tens}}{2} = 4.2$ kip IS THE TENSION FORCE IN EACH BOLT.

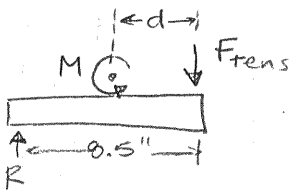

$\Sigma M_R = 0$: $72 \text{ kip·in} - (F_{tens})(8.5")$

$F_{tens} = 8.47$ kip

$$\boxed{\begin{array}{l} \frac{F_{tens}}{2} < F_{max\ tension} \\ 4.2 \text{ kip} < 19.4 \text{ kip} \end{array} \quad \text{OK!}}$$

SHEAR FORCE OCCURS IN ALL 4 BOLTS.

$$\tau_{shear} = \frac{F_B}{A_B} = \frac{2 \text{ kips}}{0.442 \text{ in}^2}$$

$$\tau_{shear} = 4.5 \text{ ksi}$$

THIS STRESS IS DISTRIBUTED EQUALLY OVER 4 BOLTS:

$$\frac{\tau_{shear}}{4} = 1.1 \text{ ksi}$$ ← SHEAR FORCE PER BOLT

ALLOWABLE SHEAR STRESS = 7.51 kip

$$\boxed{\frac{\tau_{shear}}{4} < \tau_{all} \qquad \underline{\underline{OK!}}}$$