Fermilab

Particle Physics Division
Mechanical Department Engineering Note

Number: MD-ENG-343 Date: 3 JUNE 2011

Project Internal Reference:

Project:

Title: LOAD RATING: STEEL C-CHANNEL SUPPORT

Author(s): K. BECZKIEWICZ

Reviewer(s): Ed Chi 6/10/11

Key Words: LOAD RATING, C-CHANNEL SUPPORT

Abstract Summary: The following engineering note provides calculations for the determination of a load rating for a steel support. The steel support utilizes a C8x11.5 rolled steel shape supported by several different size angle pieces.

Applicable Codes: AISC 9th Ed.: Allowable Stress Design

Several different sizes of C-channel were used for the support weldments, so the load rating calculations were performed for the support that would carry the lowest load.

Fig. 1: Support Images

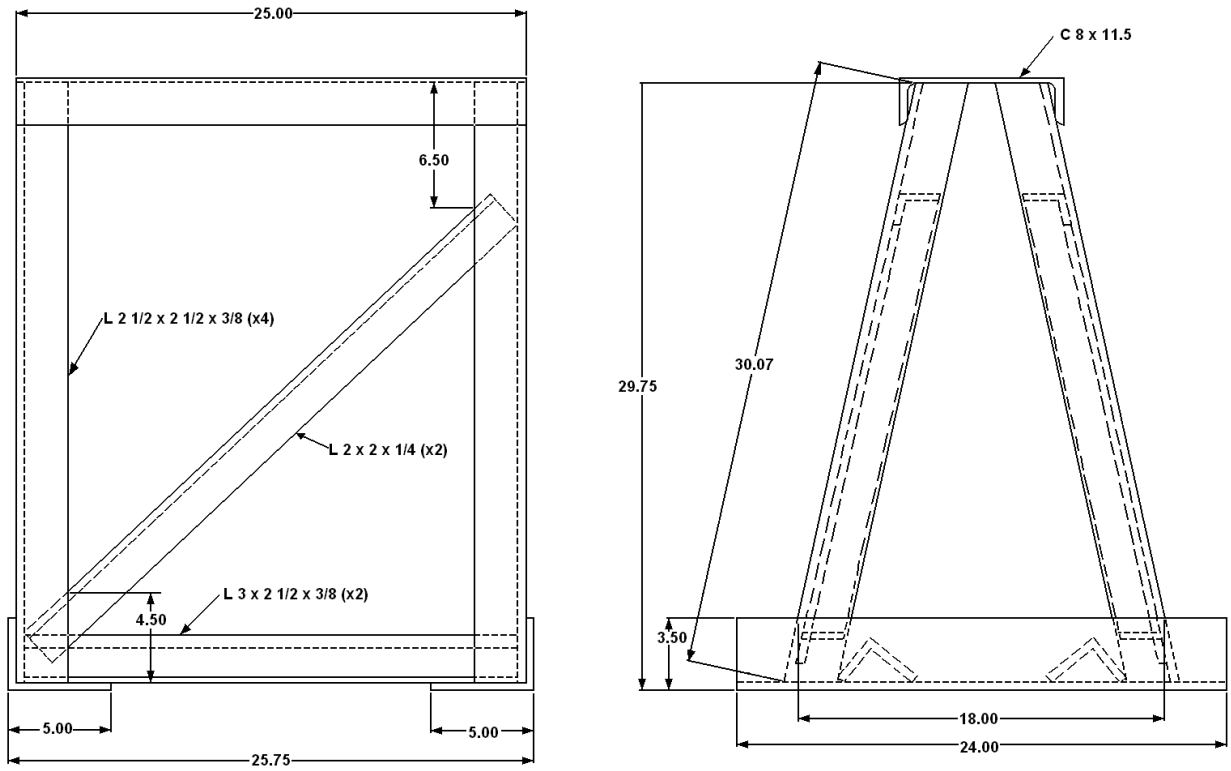

Fig. 2: Beam Dimensions

In order to simplify the analysis, it is assumed that the beam is simply supported on both ends and has a point load at the center of the beam. Using this configuration provides a more conservative value for the load.

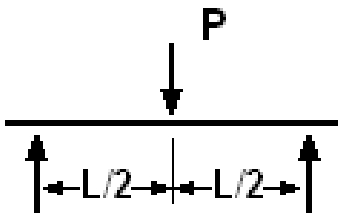

Fig. 3: Free Body Diagram

Bending Stress

To determine "P," the beam moment is calculated.

$$F_B = \frac{M}{S}$$

According to AISC design specifications, $F_B = 0.6*F_Y$

Therefore,

$$F_B = 0.6 * F_Y = \frac{M}{S}$$

For this analysis, it is assumed that the metal used for the construction of the support is A36 steel. Rearranging the equation yields:

$$M = 0.6 * F_Y * S$$

$$F_Y = 36\ ksi$$

$$S = \frac{I}{c}$$

$$I = 1.32\ in.^4$$

$$c = 2.260\ in - 0.571\ in = 1.689\ in.$$

$$S = \frac{1.32\ in^4}{1.689\ in.} = 0.782 in^3$$

$$M = 0.6 * 36\ ksi * 0.782\ in^3$$

$$M = 16.9\ kips * in.$$

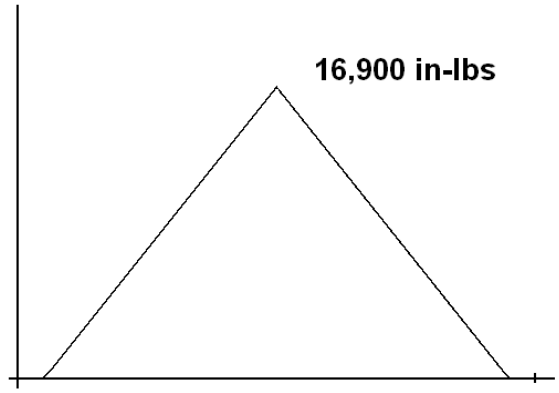

Fig. 4: Moment Diagram

$$V = \frac{M}{L/2}$$

$$V = \frac{16.9\ kips * in}{(22.5\ in.)/2}$$

$$V = 1.50\ kips$$

The following shear diagram is based off of the moment diagram.

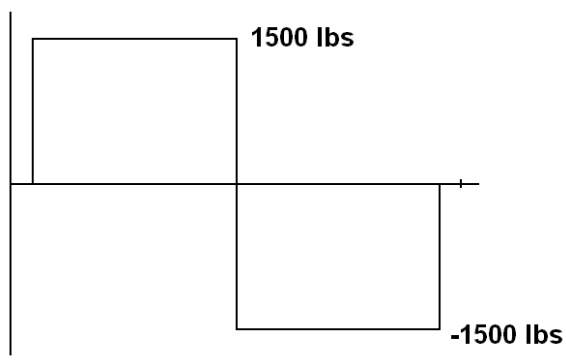

Fig. 5: Shear Diagram

$$P = 2 * 1.50\ kips$$

$$P = 3.00\ kips$$

<u>Maximum Deflection</u>

$$\delta = \frac{PL^3}{48EI}$$

For A36 steel, E=29x10^6 psi.

$$\delta = \frac{(3000\ lbs) * (22.5\ in.)^3}{48 * (29x10^6 psi) * (1.32 in.^4)}$$

$$\delta = 0.019\ in.$$

Compressive Stress in Columns

In order to ensure that the legs would not buckle when a load is placed on the support, the maximum allowable stress and its associated force were calculated.

The K-value for the column is assumed to be 1.0. It is difficult to say with certainty that the column will act as though its translation and rotation at the ends are fixed. Therefore, a more conservative K-value was used for the calculations (Table C-C2.1, p. 5-135). The length of the column is about 30.1 in., and the radius of gyration for the column, which is an L 2 ½ x 2 ½ x 3/8 rolled steel shape, is r = 0.487.

$$\frac{Kl}{r} = \frac{(1.0) * (30.1\ in.)}{(0.487\ in.)} = 61.8$$

$$C_C = \sqrt{\frac{2 * \pi^2 * E}{F_Y}} = \sqrt{\frac{2 * \pi^2 * (29x10^3 ksi)}{36\ ksi}} = 126.1$$

$$Since\ \frac{Kl}{r} < C_C, \quad F_A = \frac{\left[1 - \frac{(Kl/r)^2}{2 * {C_C}^2}\right] * F_Y}{\frac{5}{3} + \frac{3(Kl/r)}{8C_C} - \frac{(Kl/r)^3}{8{C_C}^3}}$$

$$F_A = \frac{\left[1 - \frac{(61.8)^2}{2 * 126.1^2}\right] * (36\ ksi)}{\frac{5}{3} + \frac{3 * (61.8)}{8 * (126.1)} - \frac{(61.8)^3}{8 * (126.1)^3}}$$

$$F_A = 17.3\ ksi$$

The compressive stress is then used to determine the associated force.

$$F_A = \frac{P}{A}$$

The cross-sectional area of the column is 1.73 in^2. Rearranging the equation and inserting that value yields

$$P = (17.3\ ksi) * (1.73\ in^2) = 29.9\ kips$$

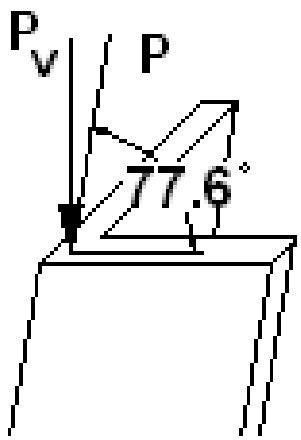

Fig. 6: Compressive Force and Vertical Component

This value is the force acting along the axis of the column. The vertical component of this force is determined as follows:

$$\sin\theta = \frac{P_V}{P}, where\ P_V\ is\ the\ vertical\ component\ of\ the\ force$$

$$P_V = P\sin\theta\ , where\ \theta = 77.6°$$

$$P_V = 29.9\ kips * \sin(77.6°)$$

$$P_V = 29.2\ kips$$

<u>Welded Joints</u>

In Table J2.5 in AISC: ASD (p.5-70), the allowable stress for fillet welds is 0.3 times the nominal tensile strength of the weld metal. Assuming the weld metal is E60xx metal, the allowable stress is F_V = 18 ksi.

$$F_V = \frac{P}{A_V}$$

$$P = F_V A_V, where\ A_V(throat\ area) = 0.707wl$$

For this analysis, it is assumed that the minimum size fillet weld is used. For a base metal piece with a thickness of 3/8”, the minimum size fillet weld is 3/16”.

$$P = 0.707 F_V wl$$

$$P = 0.707 * (18ksi) * \left(\frac{3}{16} in.\right) * (2.5\ in)$$

$$P = 5.97\ kips$$

For the calculation of shear stress on the welds, a more accurate representation is a beam in which both ends are fixed, and a point load is applied at the center of the beam. The allowable shear stress calculated above is equal to one half of the load at the center of the beam.

$$M_{MAX} = \frac{2Pl}{8}$$

$$M_{MAX} = \frac{2 * 5.97\ kips * 22.5\ in}{8}$$

$$M_{MAX} = 33.6\ kips * in.$$

$$F_B = \frac{M}{S} = \frac{33.6\ kips * in}{0.782\ in^3} = 42.9ksi$$

This value is higher than the allowable value for the bending stress. In order to keep the bending stress of the beam within the allowable range, the value for the shear stress on the welds must be lower than the calculated value above.

The calculated value above (5.97 kips) applies to the weld along one side of one of the legs of one of the angles, either where it meets the C-channel at the top or where it is welded to the angle that provides the base of the support. At either location, there is typically more than one weld: angle pieces are welded on both of sides of each leg; the flange and web of the C-channel are welded to the angle legs at various locations with differing weld dimensions. Even so, the previous calculation provides a large enough value that it would not be the limiting factor in the calculations.

Based on the above calculations, the limiting stress for the simply supported beam is bending stress. The force associated with this stress is 3000 lbs.

<u>Friction and Tipping of the Support</u>

As a precautionary calculation, the force needed to tip the support over was determined.

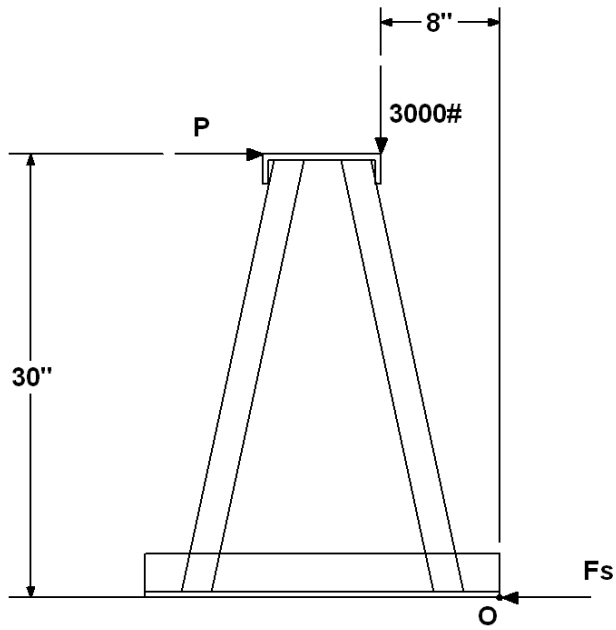

Fig. 7: Tipping Force Diagram

For this calculation the maximum force as determined by the bending stress, 3000 lbs, was used.

$$F_S = \mu P_N$$

For steel on concrete, μ = 0.45

$$F_S = (0.45) * (3000\ lbs)$$

$$F_S = 1350\ lbs$$

$$\sum M_O = 0 = (3000 lbs)(8\ in.) + (P)(-30\ in.)$$

$$P = 800\ lbs$$

If 800 lbs ≤ P ≤ 1350 lbs, the stand will tip over; once P > 1350 lbs, the stand will slide, due to the fact that the force will have overcome the force of friction. This calculation assumed the most extreme loading conditions: the force applied as close to the point of rotation as possible. Typically, the load would be applied closer to the centerline of the C-channel, which would yield a higher required force for tipping.

Solid Modeling

The previous calculations provided a bit of an over-simplification of the support. Under actual loading conditions (an example of which can be seen in Fig. 1), the force acting on the beam would be better represented by a distributed load acting on the beam. Similar loading conditions to those shown in Fig. 1 were modeled using the I-DEAS finite element analysis software. A distributed load was placed in the center of the top of the support. Constraints were placed on the bottom of the model (xz-plane) to prevent translation in the direction of the y-axis and rotation about the x- and z-axes. These constraints represent the support being placed on solid, level ground.

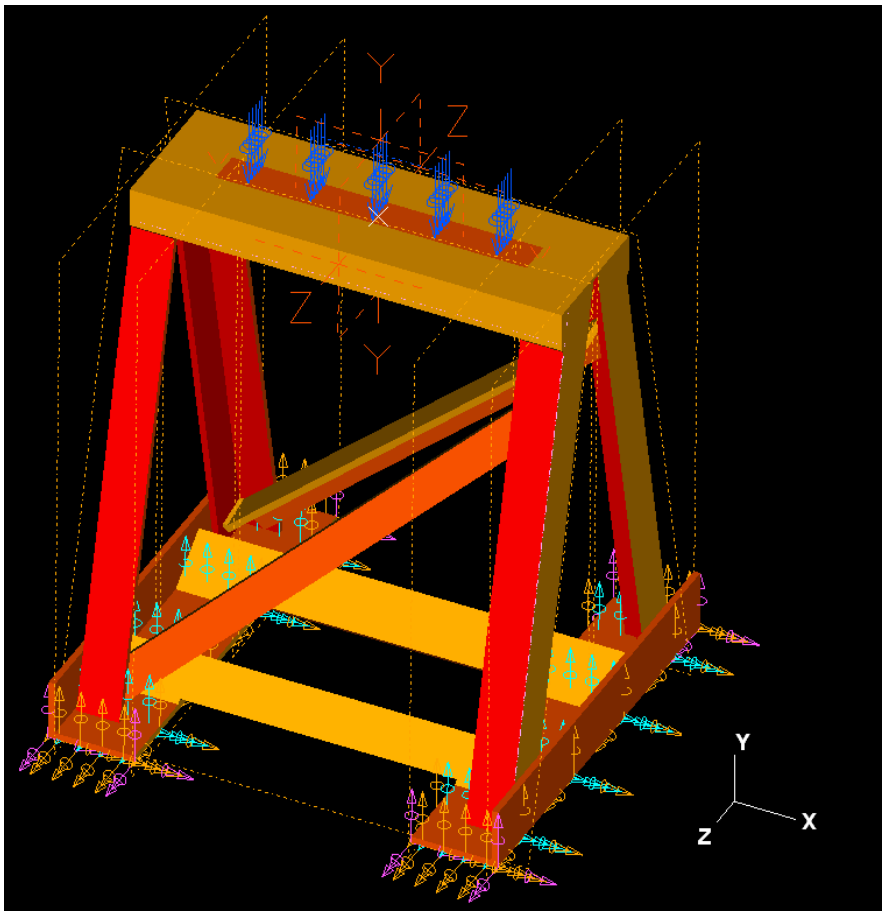

Fig. 8: 3-d Model of Steel C-Channel Support

Using the force that was determined in hand calculations (3000 lbs), a resulting stress of 18.6 ksi was present in the 3-d model. The deflection associated with the load was 0.032 in., compared to 0.019 in hand calculations.

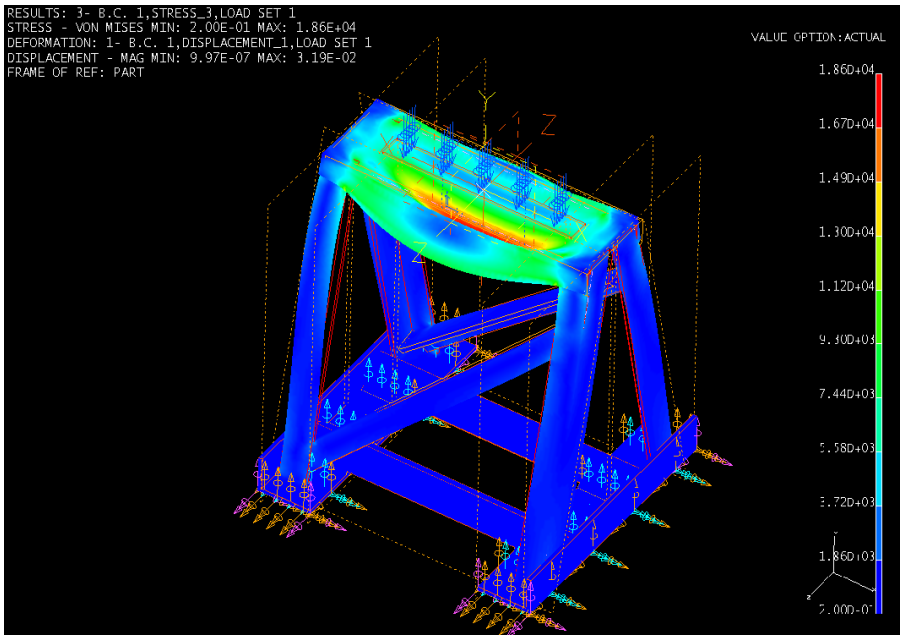

Fig. 9: 3000 lb Load

A load of 3500 lbs produced a stress of 21.4 ksi. The associated maximum deflection was 0.037 in.

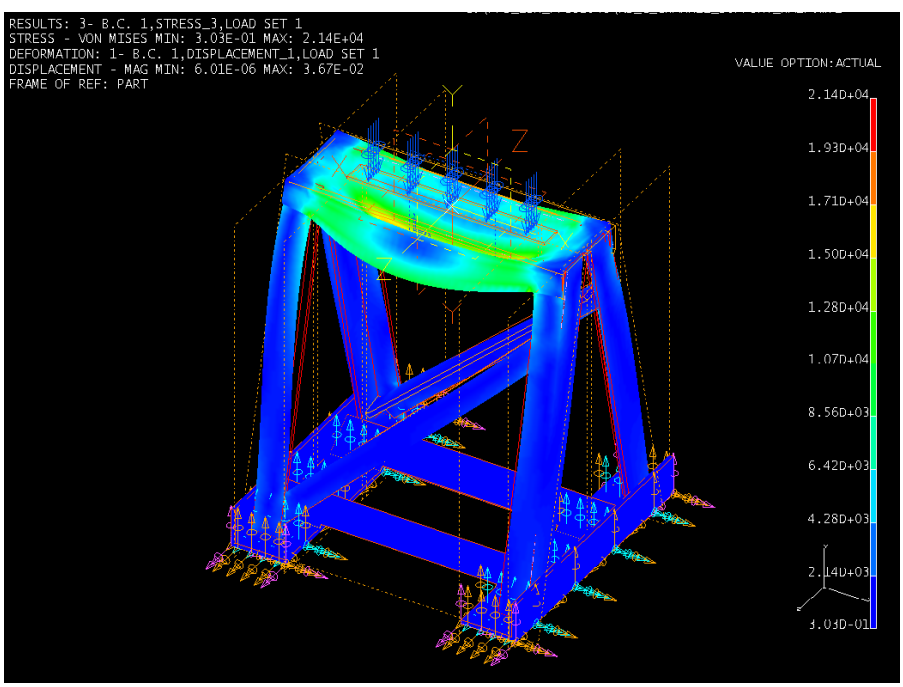

Fig. 10: 3500 Load

For the C-channel support, the highest stresses occur in the area of the load application, as can be seen in Fig. 11.

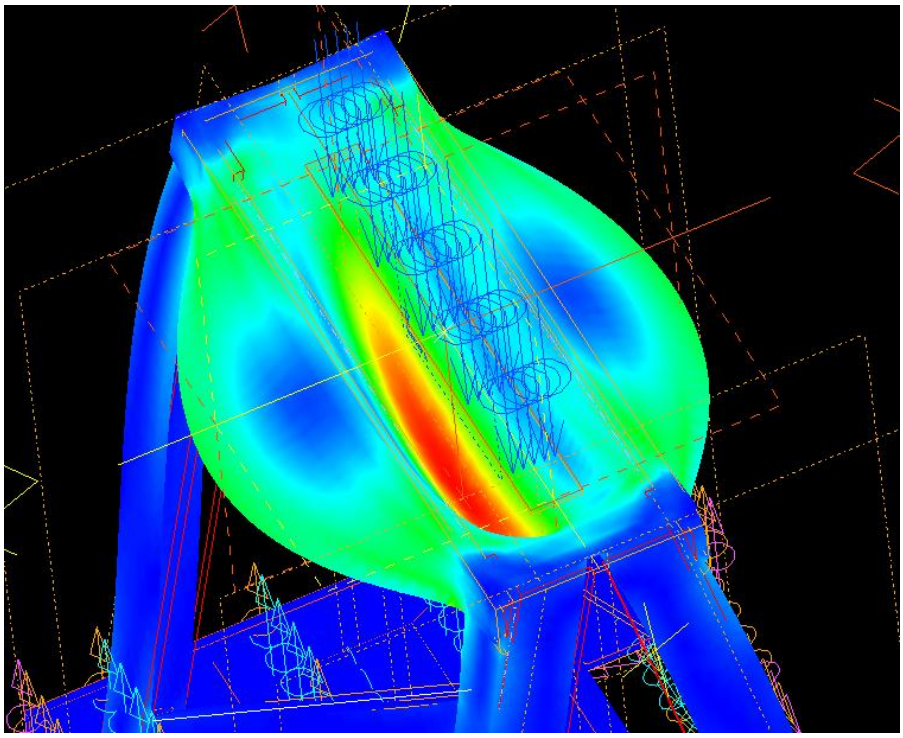

Fig. 11: Maximum Stress Location

The loading conditions used in the model assume that the load is applied in a symmetric manner. If this were not the case, stresses would be elevated in the section of the support that is closest to the load.

Conclusion

Based on the values determined in the calculations and 3-d models, a suggested load rating for the support is 3000 lbs. This is the load that yielded the maximum allowable bending stress of the C-channel beam. While a load rating of 3000 lbs is below the maximum allowable stress based on the 3-d model, it allows for variations in loading conditions. This value also gives acceptable values for the column buckling compressive stress and the shearing stress in the welds.