Fermilab

Particle Physics Division

12-01-01

Mechanical Department Engineering Note

Number: MD-Eng-62

Date: October 27, 2004

Project: BTev

Project Internal Reference:

Title: Existing Vessel #57628 Application Verification Study for BTev Pixels 50% Test

Author(s): Ingrid Fang

Reviewer(s): Bob Wands

Key Words: BTev Pixels and Vessel

Abstract/Summary:

This existing vessel (FNAL PROPERTY # 57628) is located at Lab F at FermiLab. According to Jim Fast, information for this vessel can not be accessed in any Divisions or Sections. Thus, the original application for this vessel is unknown. This study is to determine whether this vessel can be used as a vacuum vessel under external pressure for the BTev Pixels 50% test.

The material specification of this vessel is assumed to be stainless steel 304 for this calculation. Future material verification tests must be performed before this vessel can be put in service. If material variation was discovered in such tests, this engineering note shall be excluded and new study shall be performed.

The configuration of this vessel is shown in the photos. Several modifications shall be implemented for the 50% test application. They are:

1. The short nozzle near one of the covers needs to be removed.
2. The new square flat head with circular reentrant region will be installed to replace the short nozzle.
3. All openings on the vessel shall be plugged with the same material as the vessel with full penetration welds.
4. The original vessel will be shortened to 5-1/2 feet in length.
5. The original vessel support frame will be modified and used for the shorter vessel.

However, this study will only address the stress and vessel stability under external pressure.

Applicable Codes:

1. ***Boiler & pressure Vessel Code, Section Vii, Division 1***, *American Society of Mechanical Engineers*
2. ***Boiler & pressure Vessel Code, Section ii, Part D***, *American Society of Mechanical Engineers*
3. ***Pressure Vessel Handbook, Twelfth Edition, Eugene F. Megyesy,*** *Pressure Vessel Publishing, InC.*
4. ***Fermilab Vacuum Vessel Safety FESHM Chapter5033****(Formerly Fermilab Engineering Standard SD-41)*

1. Description and Identification:

This existing vessel FNAL PROPERTY # 57628 is located at Lab F at Fermilab. According to Jim Fast, information for this vessel can not be accessed in any Division or Sections. Thus, the original application for this vessel is unknown. This study is to determine whether this vessel can be used as a vacuum vessel under external pressure for the BTev Pixels 50% test.

The material specification of this vessel is assumed to be stainless steel 304 for this calculation. Future material verification tests must be performed before this vessel can be put in service. If material variation was discovered in such tests, this engineering note shall be excluded and new study shall be performed.

the configuration of this vessel is shown in the photos. Several modifications shall be implemented for the 50% test application.

They are:

1. The short nozzle near one of the covers needs to be removed.
2. The new square flat head with circlar re-entrant region will be installed to replace the short nozzle.
3. All openings on the vessel shall be plugged with the same material as the vessel with full penetration welds.
4. The original vessel will be shortened to 5-½ feet in length.
5. The original vessel support frame will be modified and used for the shorter vessel.

However, this study will only address the stress and vessel stability under external pressure.

2. Design Verification:

The following calculation is based on the ASME BOILER AND PRESSURE VESSEL CODE-2001, Sections VIII. DIV I

a. check stresses in cylinderical shell.

A vessel under external pressure, when other forces (wind, earthquake, etc) are not factors, must be designed to resist the circumferential buckling only. The code provides the method of design to meet this requirement.

The compressive stress due to external pressure shall be determined by the formulas:

$$S_1 = \frac{PD}{4t} \quad *$$

$$S_2 = \frac{PD}{2t} \quad *$$

* Pressure vessel Handbook, twelfth Edition, Eugene Megyesy.

Where S_1 — longitudinal stress, psi

S_2 — circumferential (hoop) stress, psi

P — external pressure, psi

D — Mean Diameter of vessel, inches

t — thickness of shell, corrosion allowance excluded, inches.

Know: Vessel basic dimensions:

O.D $= 36.25''$ I.D $= 35.75''$

Wall thickness $= 0.25''$

Thus,

$$S_1 = \frac{PD}{4t} = \frac{15 \times \left[\frac{1}{2}(36.25 + 35.75)\right]}{4 \times 0.25}$$

$$= 270 \text{ psi}$$

$$S_2 = \frac{PD}{2t} = \frac{15 \times [(\frac{1}{2} \times (36.25 + 35.75)]}{2 \times 0.25}$$

$= 540$ psi — governs

According to ASME BOILER & PRESSURE VESSEL CODE Section II part D — Table 1A, or Pressure Vessel Handbook P190.

the maximum allowable stress for SS304 seamless tube is 16.7 ksi.

Thus, the safety factor is

$$SF = \frac{16.7}{540 \times 10^{-3}} = 31$$

OK

b. Check maximum allowable working pressure in shell.

According to UG28, when $\frac{D_o}{t}$ equal to or greater than 10, the maximum allowable pressure P_a

$$P_a = \frac{4B}{3(D_o/t)}$$

where D_o — outside diameter, in

t — minimum required wall thickness, in.

$$\frac{D_o}{t} = \frac{36.25}{0.25} = 145 > 10$$

Find B: $\frac{L}{D_o}$ where $L = 5\frac{1}{2}$ ft $= 66$ in

$D_o = 36.25$ in

$$= \frac{66}{36.25}$$

$$= 1.82$$

From Fig G, knowing: $A = 0.0004$
page 42 (Handbook)

From Fig HA-3, knowing: $B = 5500$
page 43 (Handbook)

Thus,
$$p_a = \frac{4B}{3(D_o/t)}$$
$$= \frac{4 \times 5500}{3 \times 145} = 50.57 \text{ psi} > 15 \text{ psi}$$

OK

C. Check MAWP FOR INTERNAL PRESSURE IN SHELL
UG27, page 22 — Handbook
$$p = \frac{SEt}{R - 0.4t}$$

where S = Stress value of material 16.7 ksi
E = Joint efficiency = 0.45 (worst case)
t = wall thinkness = 0.25"
R = Outside radius = $\frac{36.25}{2} = 18.125$"

$$p = \frac{16.7 \times 10^3 \times 0.45 \times 0.25}{18.125 - 0.4 \times 0.25}$$

$$= 104 \text{ psi} >> 5 \text{ psi}$$

(Cryo pipe raputure case)

OK

d. Check the Flange Stress under internal pressure:

APPENDIX 2 — Rules for Bolted Flange connections with RING TYPE GASKETS.

page 331

Flange basic dimensions:

thickness = 1 3/4" B.C = ϕ 40.4375"

O.D = 41"

I.D = 36.25"

Seal = ϕ 5/16"

seal location from O.D = 1 3/4"

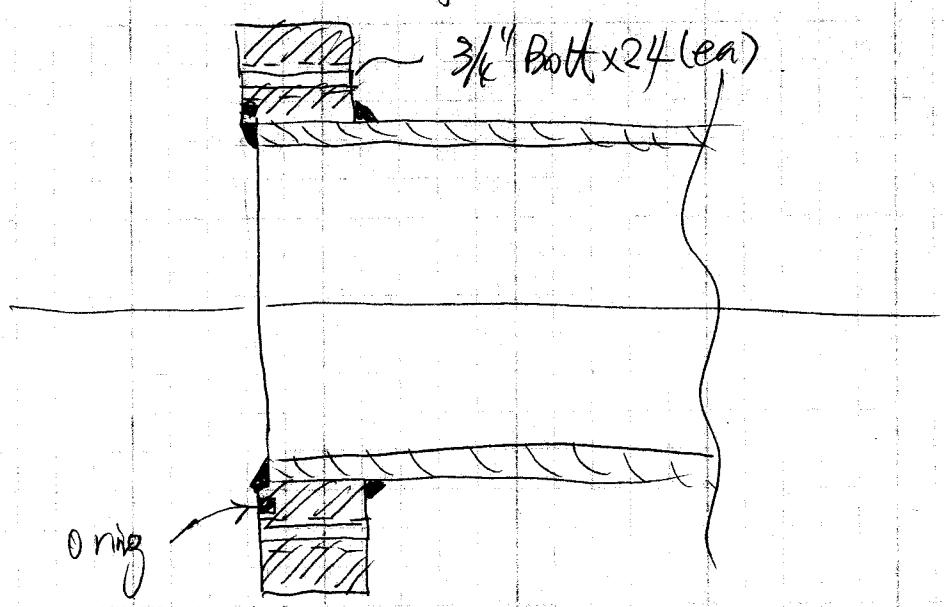

d1 — Find Required Bolt Load

2-5 Bolt Load, C(1) known: loose type flange 3(a)

$W_{m1} = H + H_P$

where W_{m1} — minimum required bolt load for the operating condition.

H — total hydrostatic end force, lb

$H = 0.785 G^2 P$

where G — diameter, in, at location of gasket load reaction

P — internal design pressure

where $G = 41 - 2 \times 1\frac{3}{4} + \frac{5}{16}$

$= 37.8125$ in

$P = 5$ psi

$H = 0.785 G^2 P$

$= 0.785 \times 37.8125^2 \times 5 = 5611.9$ lb

Hp — total joint-contact surface compressive load, lb

$H_p = 2b \times 3.14 G m P$

where m — gasket factor, obtain from table 2-5.1

for self-engergizing type o ring $m = 0$.

$H_p = 0$.

Thus, $W_{m1} = H$

$= 5611.9$ lbs

According to Section II, Part D. Table 3

for B7 Grade 3/4" Bolt,

Allowable stress = 18.7 ksi

Allowable load = PA

$= 18.7\times10^3 \times \frac{1}{4}\pi d^2$

$= 18.7\times10^3 \times \frac{1}{4}\times\pi\times 0.75^2$

$= 8261$ lbs

Thus, the safety factor is

$$\frac{24\times 8261}{5611.9} = 3.5$$

d2 — Find Flange Moments

Sect VIII Division 1, Appendix 2, 2-6.

$M_O = M_D + M_T + M_G$

Where M_O — total moment acting upon the flange in-lbs

$M_D = H_D h_D$

Where

$h_D = \frac{C-B}{2}$

$= \frac{40.4375-36.25}{2}$

$= 2.093$ in

$H_D = 0.785 B^2 P$

$= 0.785 \times 36.25^2 \times 5$

$= 5157.69$ lb-in

$M_T = H_T h_T$

where $H_T = H - H_D$

$= 5611.9 - 5157.69 = 454$ lbs

$h_T = \frac{h_D + h_G}{2} = \frac{2.09375 + 1.3125}{2} = 1.7$ in

$M_G = 0$ (since $H_P = 0$)

Thus, $M_o = M_D + M_T + M_G$

$= 2.093 \times 5157.69 + 454 \times 1.7 + 0$

$= 11568.26$ lb-in

d3 — Find Flange stresses S_T

Section VIII Division 1, Appendix 2, 2-7.

$S_T = \frac{Y M_o}{t^2 B}$ — for loose type

where Y — gasket or joint-contact-surface unit seating load.

M_o — total moment acting upon the flange

t — flange thickness

B — inside diameter of flange

From Fig 2-7.1, knowing:

$$Y = \frac{1}{K-1}\left[0.66845 + 5.71690\,\frac{K^2 \log_{10} K}{K^2-1}\right]$$

where $K = \frac{A}{B}$

A = outside of diameter of the flange = 41"

B = inside of diameter of the flange = 36.25"

Thus, $K = \frac{A}{B}$

$$= \frac{41}{36.25} = 1.13$$

$$Y = \frac{1}{1.13-1}\left[0.66845 + 5.71690\,\frac{1.13^2 \log_{10} 1.13}{1.13^2-1}\right]$$

$$= 15.9$$

Thus, $S_T = \frac{15.9 \times 11568.26}{1.75^2 \times 36.25} = 1656.8$ psi

From previous study, knowing, $S_f = 16.7$ ksi

$S_T \ll S_f$ OK

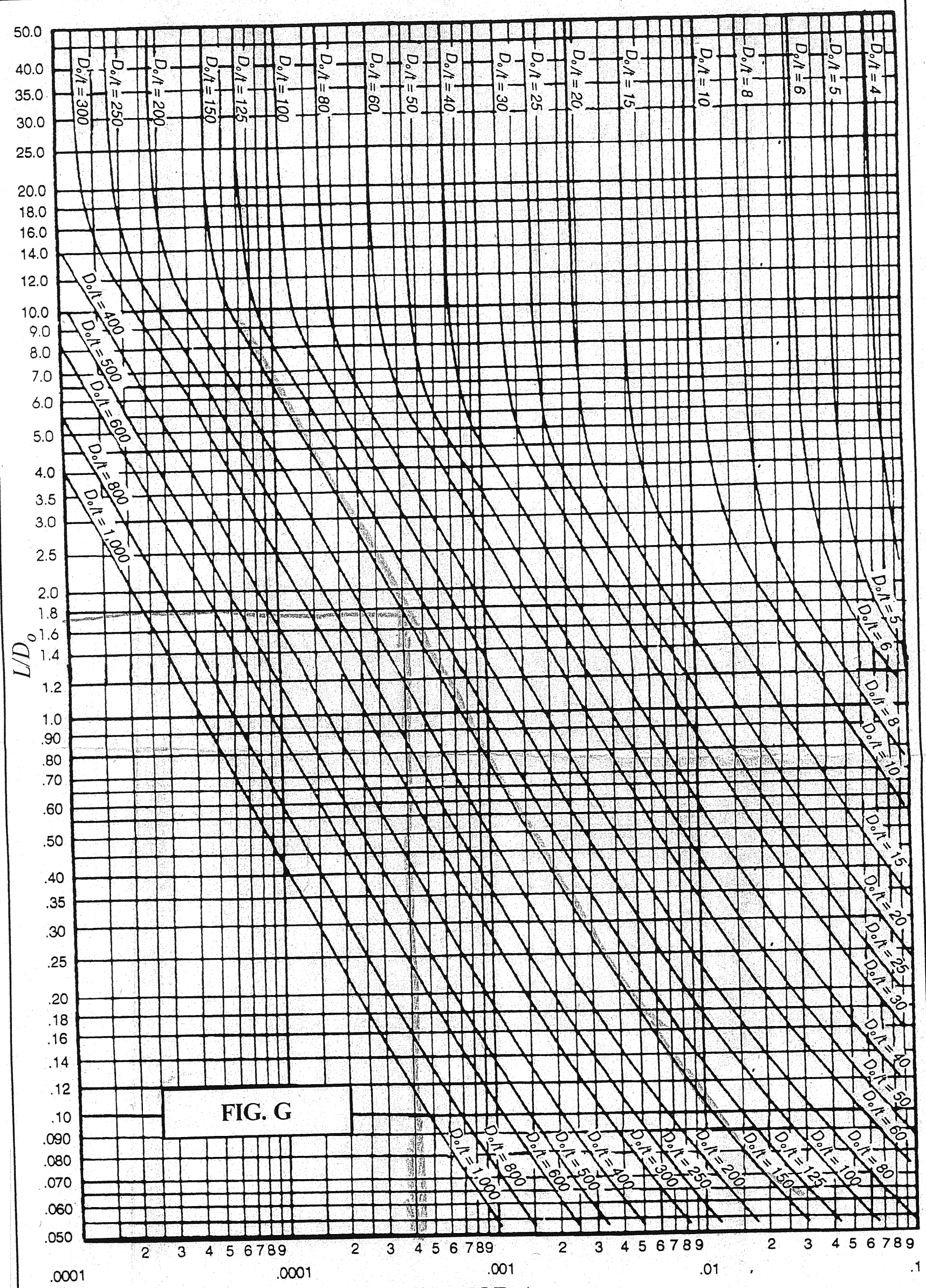

FIG. G

THE VALUES OF FACTOR A
USED IN FORMULAS FOR VESSELS UNDER EXTERNAL PRESSURE

e. check the flange stress under external pressure

section VIII, Appendix 2, 2-11, page 345.

$$M_o = H_D(h_D - h_G) + H_T(h_T - h_G)$$

Where $H_D = 0.785 B^2 P_e$

$= 0.785 \times 36.25^2 \times 15$

$= 15473$ lb

$$h_D - h_G = \left(\frac{C-B}{2}\right) - \left(\frac{C-G}{2}\right)$$

$$= \frac{G}{2} - \frac{B}{2} = \frac{37.8125}{2} - \frac{36.25}{2}$$

$= 0.78125$ in

$H_T = H - H_D$

$= 0.785 G^2 P_e - 15473$

$= 0.785 \times 37.8125^2 \times 15 - 15473$

$= 16835.7 - 15473$

$= 1362.7$ lbs

$$h_T - h_G = \left(\frac{h_D + h_G}{2}\right) - \frac{C-G}{2}$$

$$= \frac{\left(\frac{C-B}{2} + \frac{C-G}{2}\right)}{2} - \frac{C-G}{2}$$

$$= \frac{C}{2} - \frac{(B+G)}{4} - \frac{C-G}{2}$$

$$= -\frac{B}{4} - \frac{G}{4} + \frac{G}{2} = \frac{G}{4} - \frac{B}{4}$$

$$= \frac{1}{4}(37.8125 - 36.25) = 0.39 \text{ in}$$

$M_0 = 15473 \times 0.78125 + 1362.7 \times 0.39$

$= 12620.5$ lb·in

$$S_T = \frac{Y M_0}{t^2 B}$$

$$= \frac{15.9 \times 12620.5}{1.75^2 \times 36.25} = 1807.5 \text{ psi} < S_f = 16.7 \text{ ksi}$$

OK

f. Flat Head cover A (modified side)

Section VIII, UG 34 Fig UG 34 TYPE (e) with $c = 0.25$

Details show on Jim Fast's sketch.

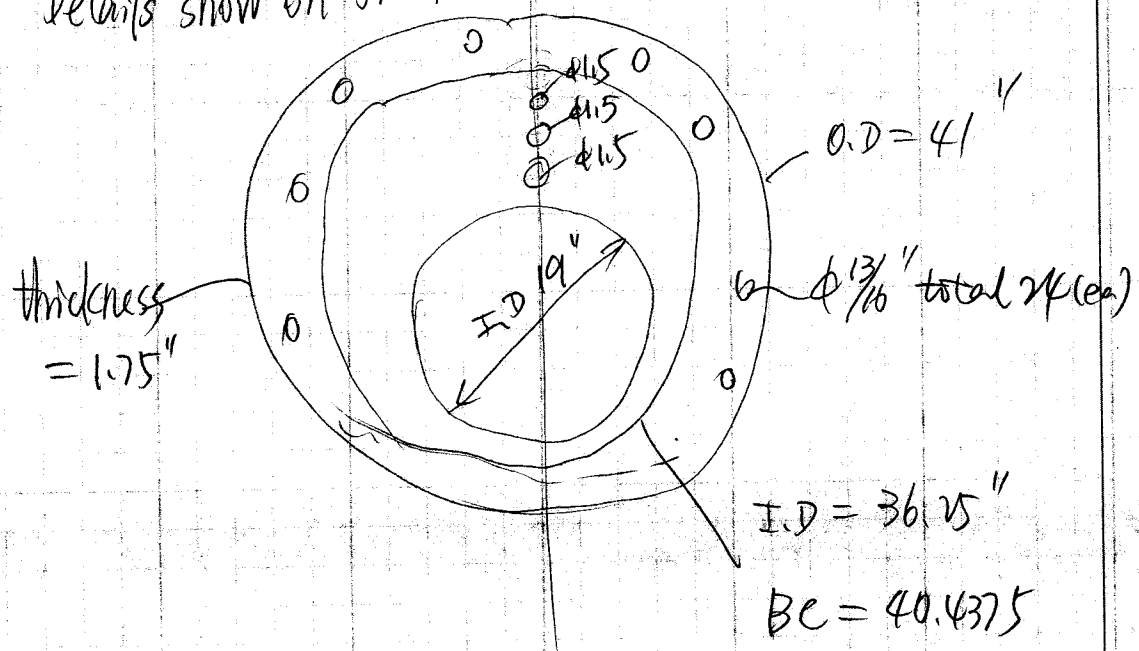

According to UG 36(b)(3)(a)

Openings in vessels not subject to rapid fluctuations in pressure do not require reinforcement other than that inherent in the construction under

the following conditions:

openings not larger than 2 3/8" in diameter in vessel shells or heads over 3/8" in thickness.

Thus, three ϕ1.5 openings can be ignored in this calculation.

According to UG-39 (b)(1)

Flat Heads that have a single opening with a diameter that does not exceed one half the head diameter, shall have a total cross-sectional area of reinforcement for all planes through the center of the opening not less than

$$A = 0.5dt + t_n(1 - fr_1)$$

where A — total cross-sectional area of reinforcement required in the plane under consideration

d — finished diameter of circular opening or finished dimension = 19"

t — specified vessel wall thickness

t_n — nozzle wall thickness = 0

fr_1 — strength reduction factor

According to UG34, C(2)

the minimum required thickness of flat unstayed circular heads shall be calculated by

$$t = d\sqrt{CP/SE}$$

Where d = diameter, measured as indicated in Fig UG34

$= 40.4375$ in

$C = 0.25$ (Fig UG34.(p))

$P = 15$ psi

$S = 16.7$ ksi

$E = 1$ (no welds)

$$t = 40.4375\sqrt{0.25 \times 15 / 16700 \times 1}$$

$= 0.6$ in.

Thus, the total cross-sectional area of reinforcement required is

$$A = 0.5dt + \cancel{tt_n(1-f_{r1})}^{\,0}$$

$= 0.5 \times 19 \times 0.6$

$= 5.756$ in^2

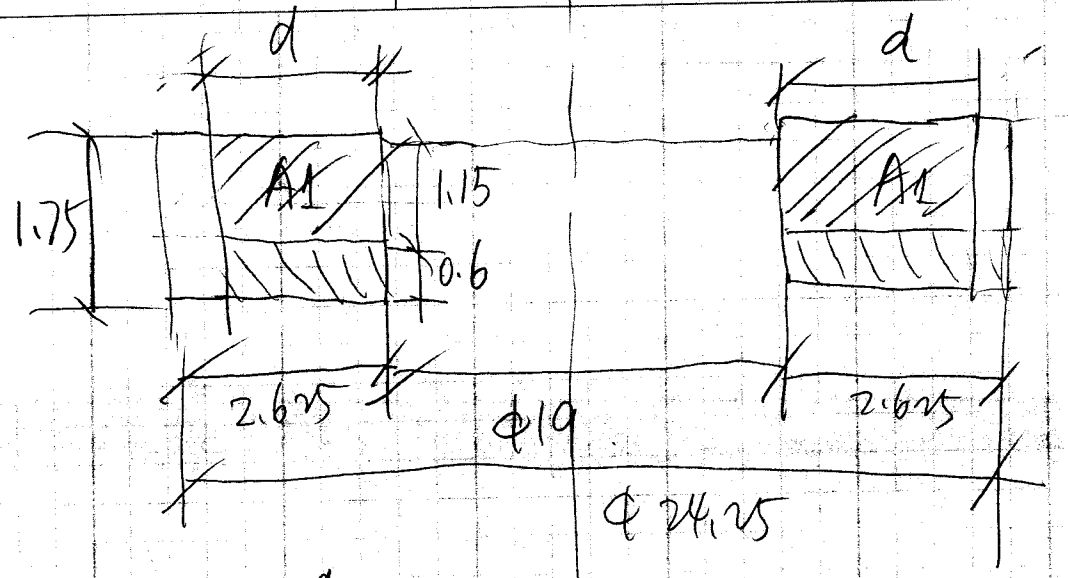

$A = 2A1$

where $A1 = d \times 1.15$

$A = 2 \times d \times 1.15 = 5.756$

Solve $d = 2.5'' < 2.625''$

ok

reinforcement is adequent.

9. Flat Head cover B (with square hole side)

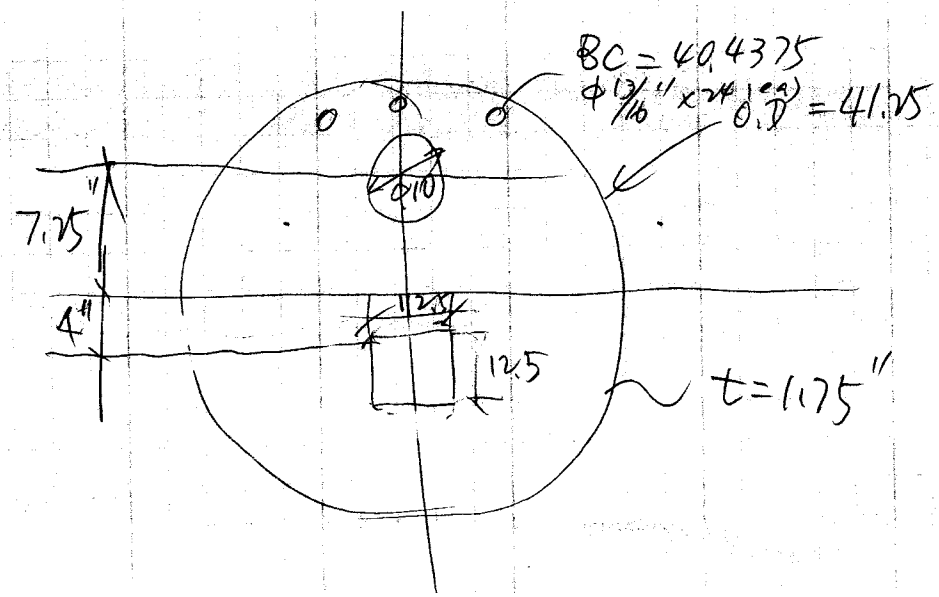

According to UG 39 (b)(2),

spacings of less than 1¼ the average diameter of adjacent openings shall be treated by rules of U2-(g)

Average diameters of a pair $= \frac{1}{2}(10+12)(1.25) = 13.83''$

spacing between the pair $= 7.25 + 6 + 4 = 17.25''$

1¼ of the average diameter $= 1.25 \times 13.83 = 17.29''$

Thus spacing < 1¼ the average diameter

OK

According to U2-(g), An FEA study is permitted.

From Ansys performed by Zhijing Tang, knowing

the maximum stress = 3.744 ksi

< allowable 16.7 ksi

Thus, the reinforcement is adequent for cover B.

h. check the new square head with circular reentrant region. (See Jim Fort's sketch)

h1. 10" pipe flat head calculation

8

$\pi R^2 p = 2\pi R F$

$\frac{R}{2} p = F = 37.5$ lb/in

18.4 lb/node

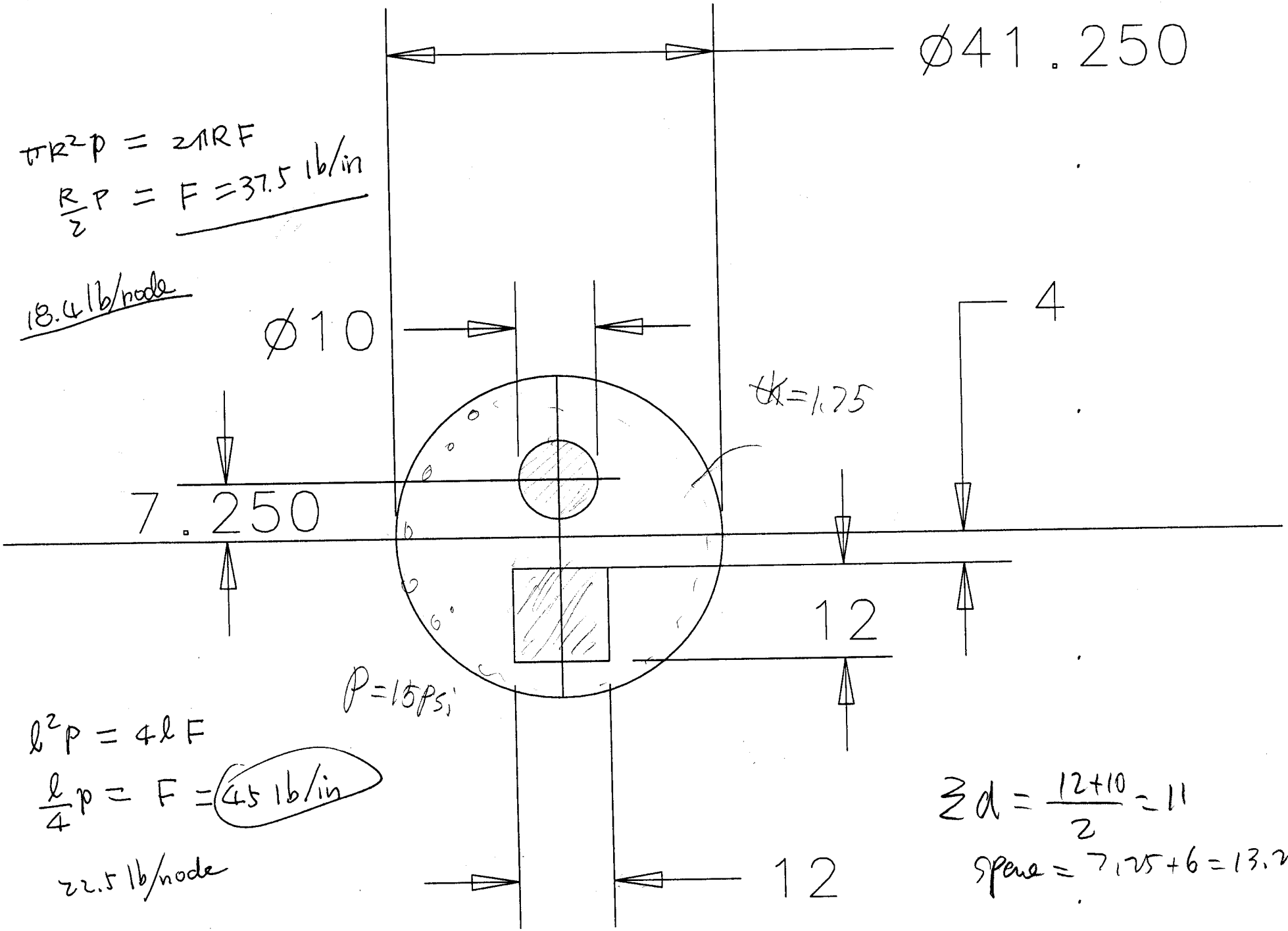

$\ell^2 p = 4\ell F$

$\frac{\ell}{4} p = F = 45$ lb/in

22.5 lb/node

$\Sigma d = \frac{12+10}{2} = 11$

spare $= 7.25 + 6 = 13.25$

Plotted by ingridf on 20-Oct-04 , File: Drawing1.pff

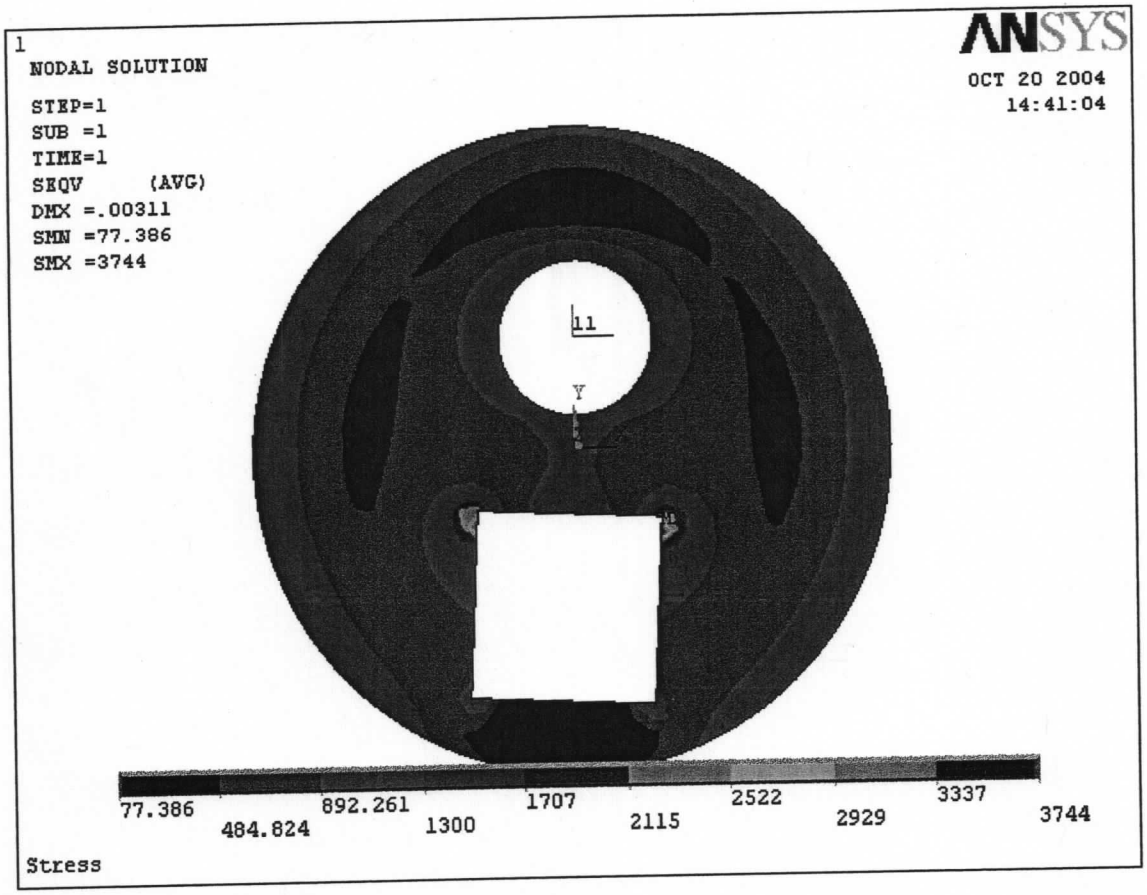
1
NODAL SOLUTION
STEP=1
SUB =1
TIME=1
SEQV (AVG)
DMX =.00311
SMN =77.386
SMX =3744
ANSYS
OCT 20 2004
14:41:04
11
Y
77.386
484.824
892.261
1300
1707
2115
2522
2929
3337
3744
Stress

28

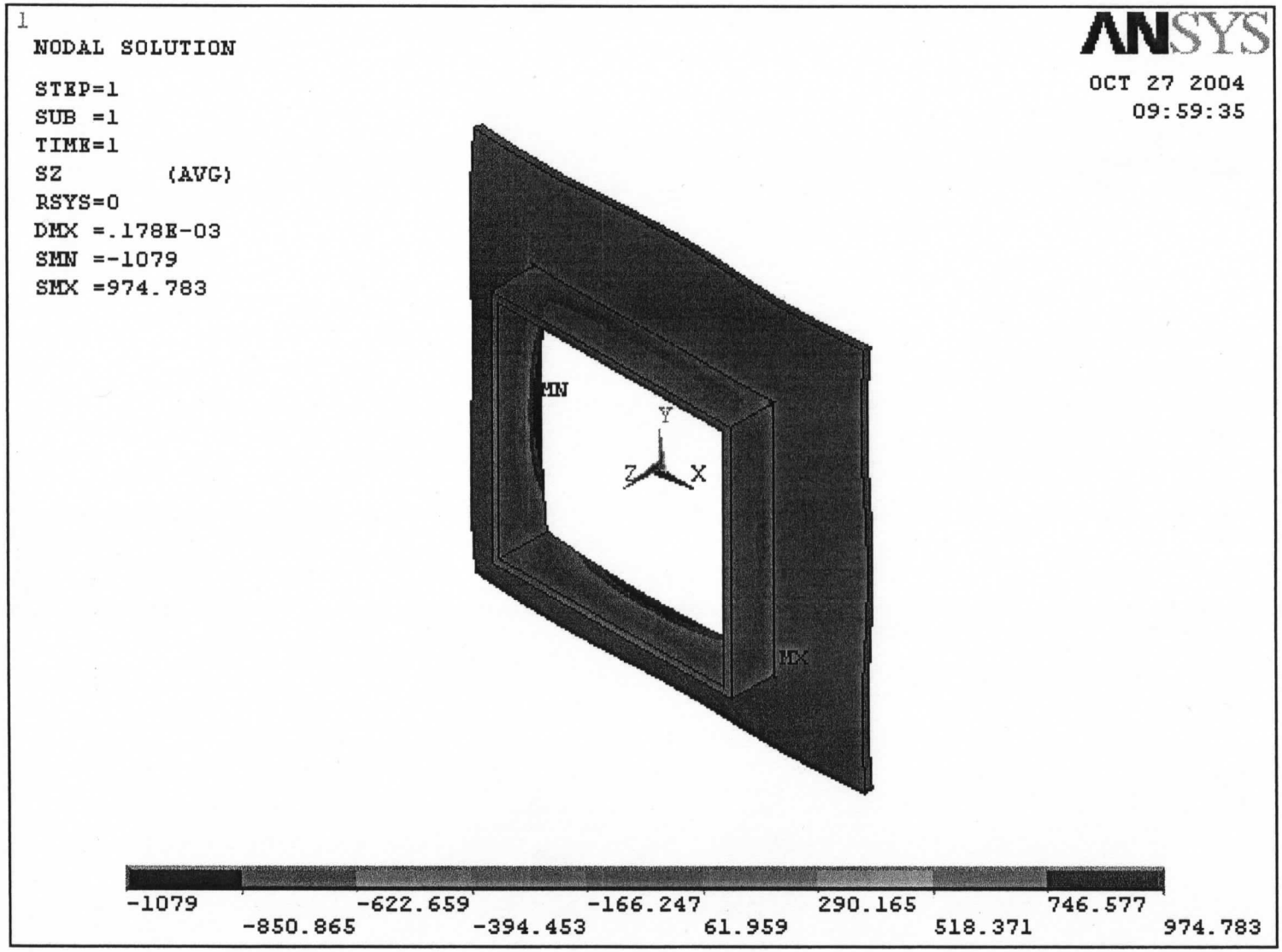
1
NODAL SOLUTION
STEP=1
SUB =1
TIME=1
SZ (AVG)
RSYS=0
DMX =.178E-03
SMN =-1079
SMX =974.783
ANSYS
OCT 27 2004
09:59:35
MN
MX
Y
Z
X
-1079
-850.865
-622.659
-394.453
-166.247
61.959
290.165
518.371
746.577
974.783

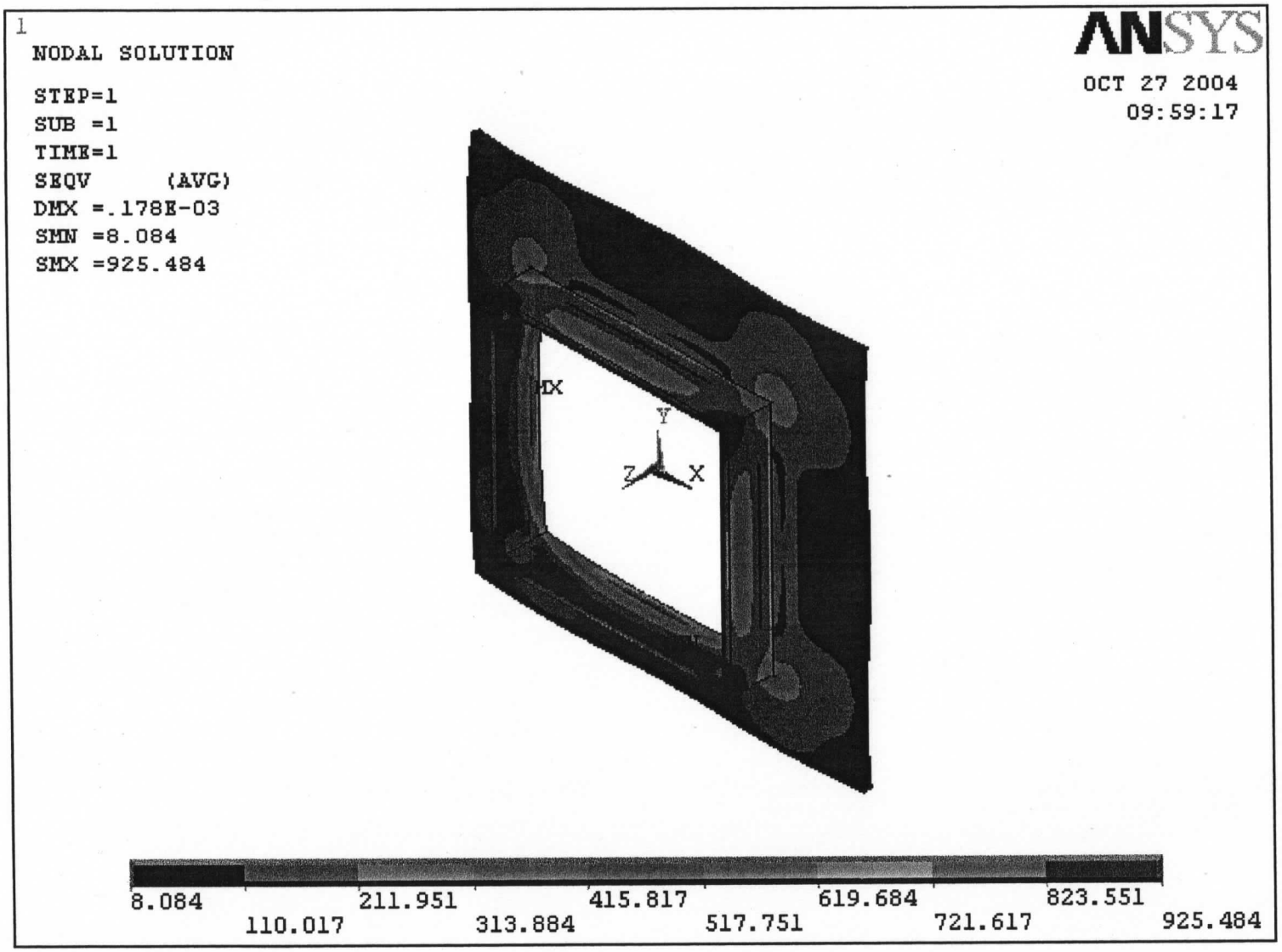
1
NODAL SOLUTION
STEP=1
SUB =1
TIME=1
SEQV (AVG)
DMX =.178E-03
SMN =8.084
SMX =925.484
ANSYS
OCT 27 2004
09:59:17
MX
Y
Z
X
8.084
110.017
211.951
313.884
415.817
517.751
619.684
721.617
823.551
925.484

Load per bolt = 2343.8/36 = 65 lbs

the safety factor on Bolt is

$$SF = \frac{725}{65} = 11. \quad \underline{\underline{OK}}$$

I. Check the Bearing stress on the cover opening

Since total 50 lb dead load will act on one of the opening on the cover. Check the smallest opening only for bearing.

Known: $F = 50$ lbs

$A = D \times t$

$= 10 \times 1.75 = 17.5 \text{ in}^2$

$$f_p = \frac{F}{A} = \frac{50}{17.5} = 2.85 \text{ psi}$$

$\ll 16.7$ ksi

$\underline{\underline{OK}}$

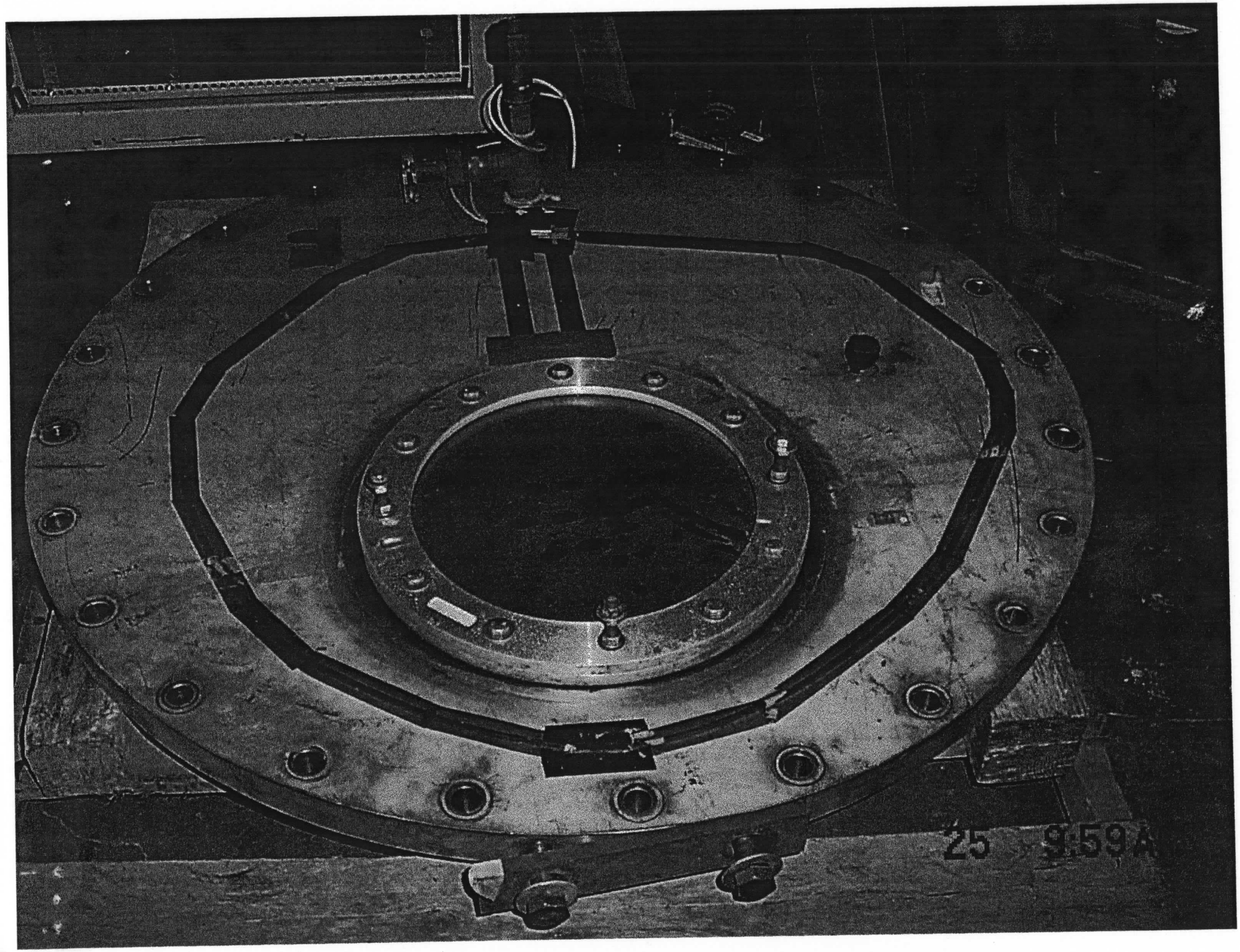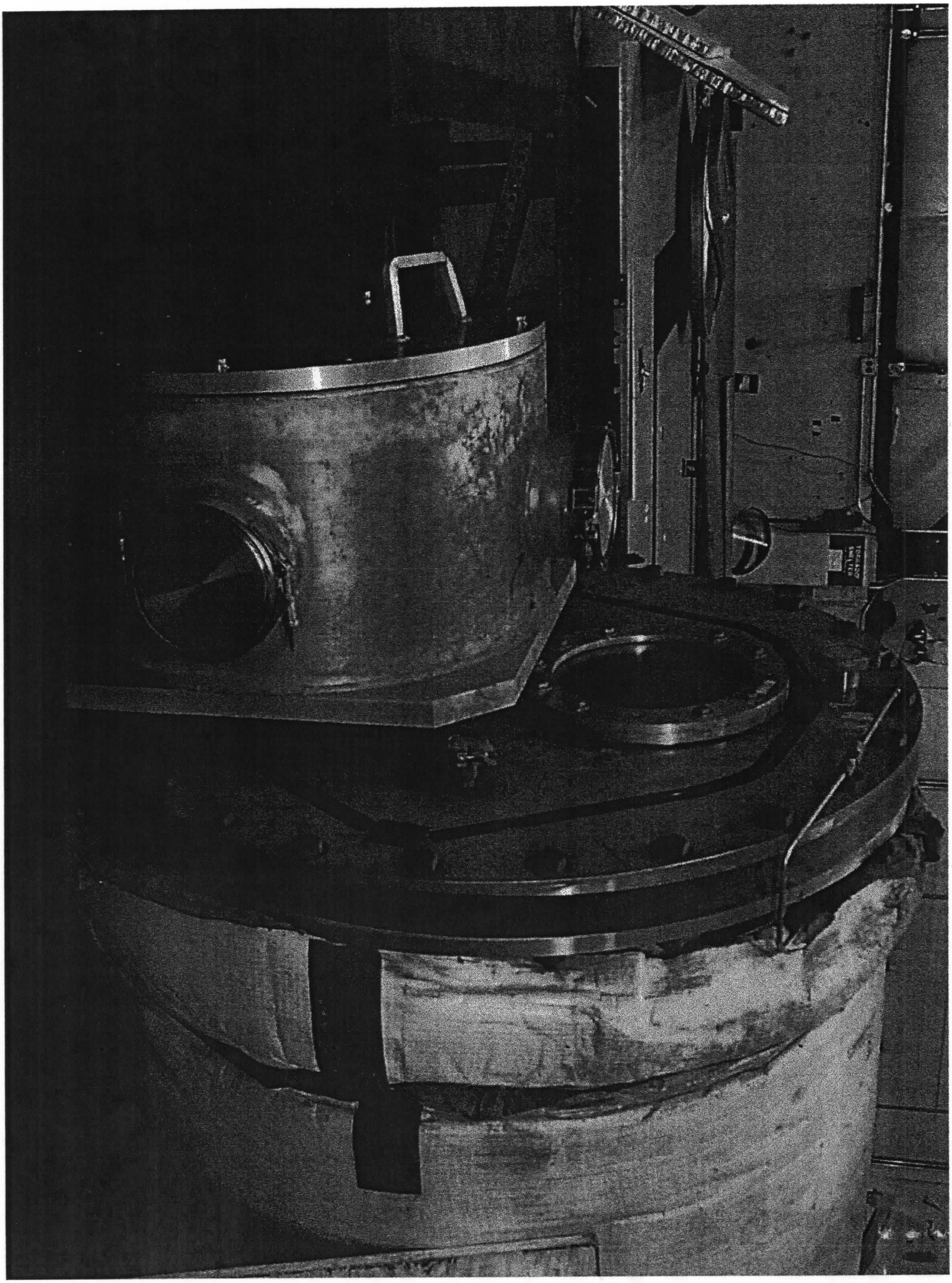
25 9:59A