REV	DESCRIPTION	DRAWN	DATE
		APPROVED	DATE

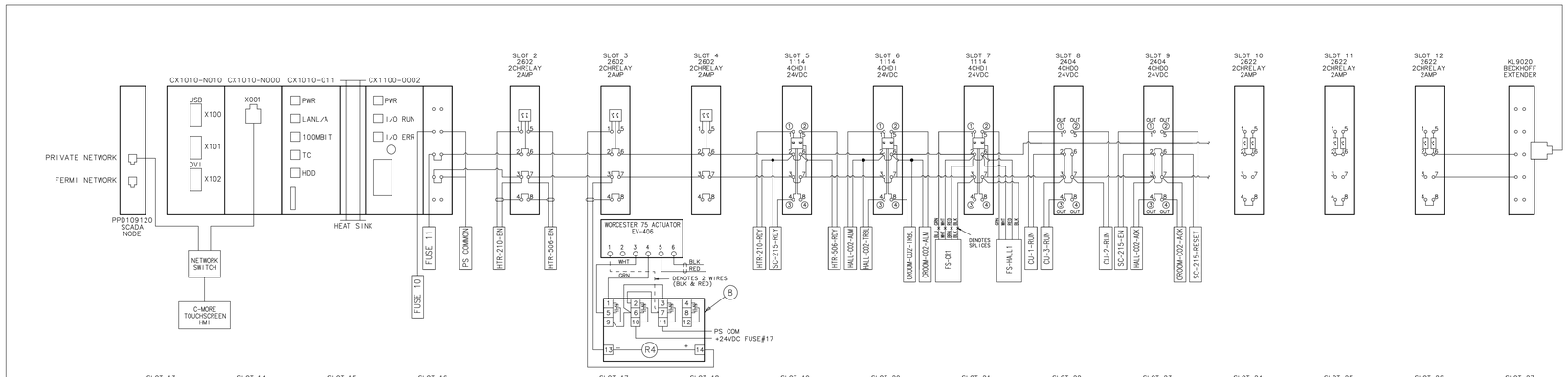

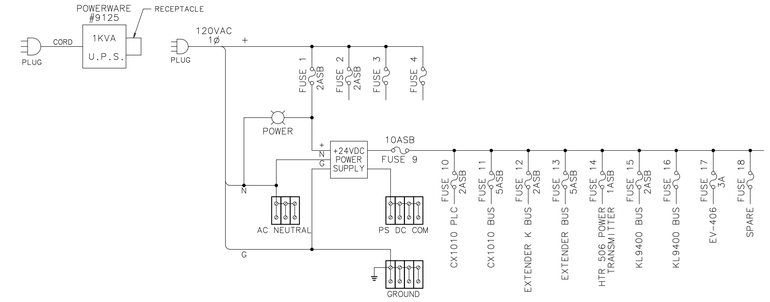

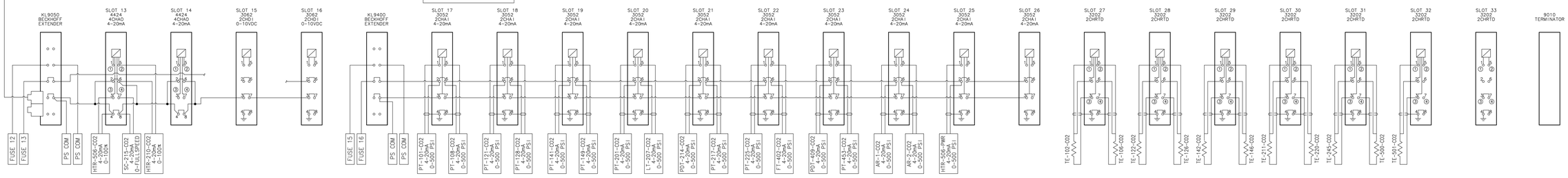

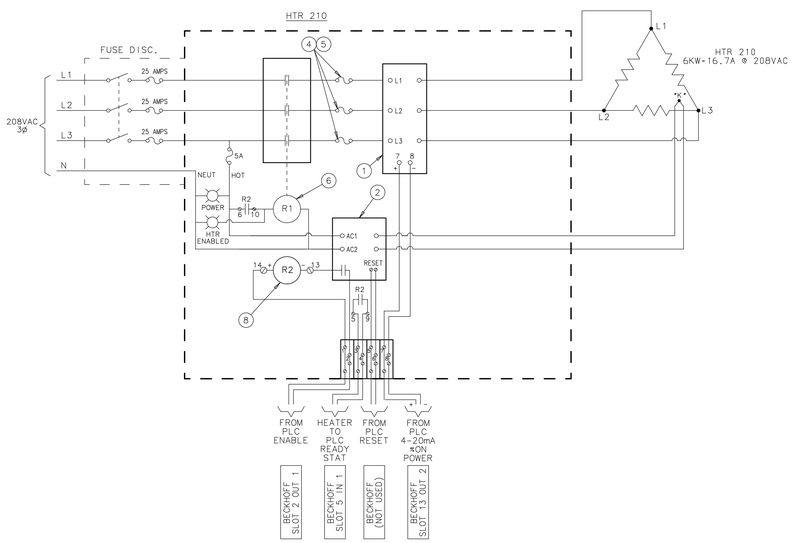

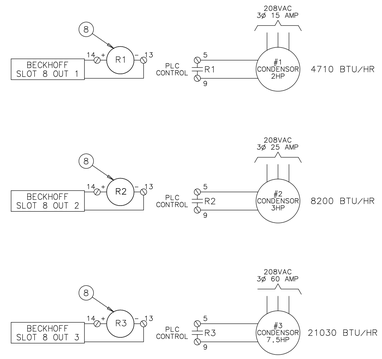

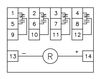

AUTOMATION DIRECT 4 POLE 24VDC TYPICAL RELAY DIAGRAM (R1 THRU R5) PART # QM4X1-024

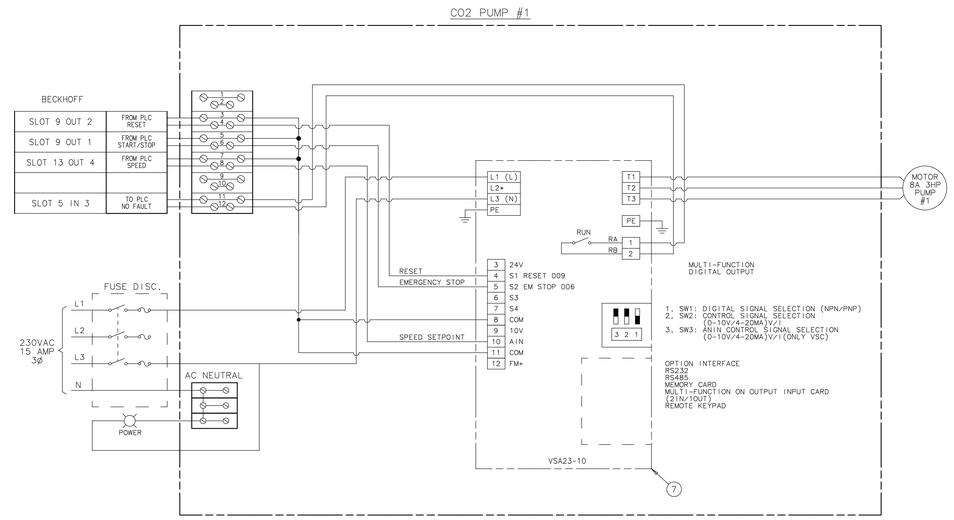

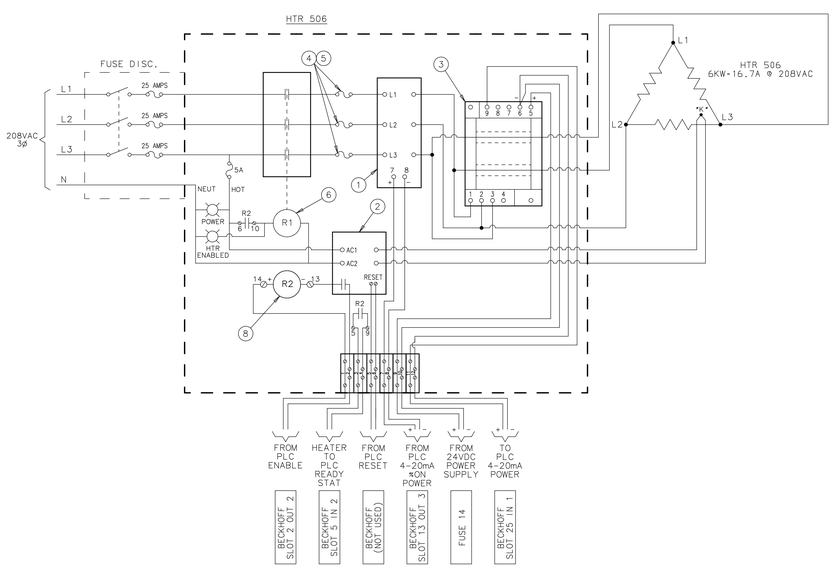

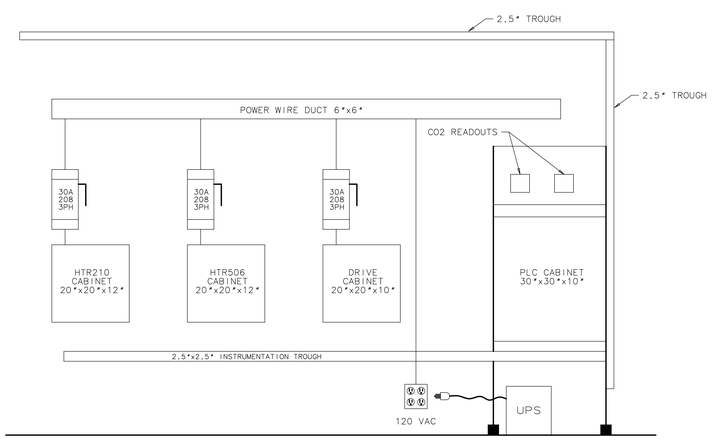

CMS CO2 COOLING SYSTEM
LAB C HALLWAY LAYOUT
DAN MARKLEY 8//20/10

LOGIC TRUTH TABLE

DEVICE	DISCRIPTION	ON STATE	OFF STATE	COMMENTS
SLOT 2 OUT 1	HTR 210 HEATER ENABLE	ENABLED	DISABLED	
SLOT 2 OUT 2	HTR 506 HEATER ENABLE	ENABLED	DISABLED	
SLOT 3 OUT 1	EV406 OPEN/CLOSE	OPEN	CLOSED	
SLOT 5 IN 1	HTR 210 HEATER READY STAT	READY	TRIPPED	
SLOT 5 IN 2	HTR 506 HEATER READY STAT	READY	TRIPPED	
SLOT 5 IN 3	CO2 PUMP READY STAT	RUN	OFF	
SLOT 8 OUT 1	CONDENSING UNIT 1 ON/OFF CONTROL	RUN	OFF	
SLOT 8 OUT 2	CONDENSING UNIT 2 ON/OFF CONTROL	RUN	OFF	
SLOT 8 OUT 3	CONDENSING UNIT 3 ON/OFF CONTROL	RUN	OFF	
SLOT 9 OUT 1	CO2 PUMP READY ENABLE	ENABLED	DISABLED	
SLOT 9 OUT 2	CO2 PUMP RESET	RESETTING	STBY	

ITEM	PART NO.	DESCRIPTION OR SIZE	QTY.
8	COML	AUTOMATION DIRECT 4 POLE 24VDC PART# QM4X1-024	5
7	COML	EMOTRON VARIABLE AC MOTOR DRIVE MODEL #VSA23-10	1
6	COML	MAGNETIC CONTACTOR, 3 POLE, 40 AMP, 120V COIL, PART #MC2--3-40-120	2
5	COML	FUSE HOLDER, DIN-RAIL MOUNT, PART #17-5114	6
4	COML	FUSES FOR DIN-A-MITE (ITEM #1) 40 AMP, PART #17-8040 L2T	6
3	COML	TRANSDUCER, AC POWER, CR MAGNETICS, PART #CR6240	1
2	COML	LV SERIES LIMIT CONTROLS WATLOW, PART #LVC2LW 000 1000 A	2
1	COML	DIN-A-MITE CONTROL INPUT 4-20ma, 3ø, 3-CONT'D LEDS, 30AMP, WATLOW, PART #DC30-24F0-0000	2

PARTS LIST

UNLESS OTHERWISE SPECIFIED	ORIGINATOR	D.MARKLEY	09-AUG-2010
	DRAWN	J.CATALANELLO	09-AUG-2010
± ± ±	CHECKED		
1. BREAK ALL SHARP EDGES MAX.	APPROVED		
2. DO NOT SCALE DRAWING. 3. DIMENSIONS BASED UPON ASME Y14.5M-1994 4. MAX. ALL MACH. SURFACES	USED ON		
5. DRAWING UNITS: U.S. INCH	MATERIAL		

FERMI NATIONAL ACCELERATOR LABORATORY
UNITED STATES DEPARTMENT OF ENERGY

CMS/DETECTORS PIXEL CONTROL SYSTEM WIRING WIRING

SCALE	DRAWING NUMBER	SHEET	REV
	9213.750-EE-486150	1 OF 2	

CREATED WITH : Ideas12NXSeries GROUP: PPD/MECHANICAL DEPARTMENT

Created: 06:03:29 on 25-05-11 (D-M-Y) By: catalan State: 1-INITIAL

REV	DESCRIPTION	DRAWN	DATE
		APPROVED	DATE

CO2 MONITOR SYSTEM
LAB "C" HALLWAY ENCLOSURE

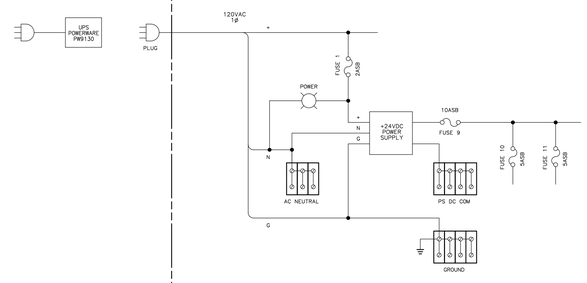

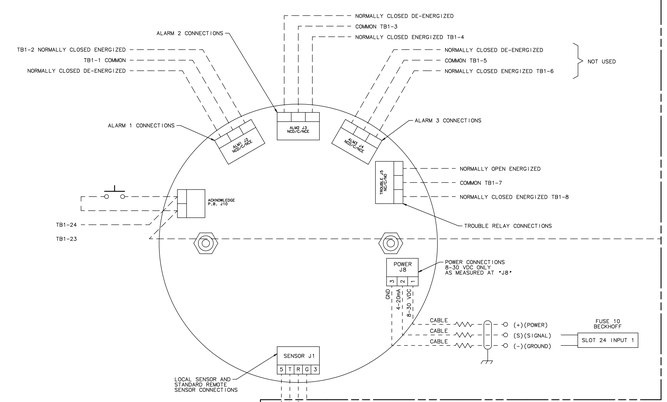

LAB "C" HALLWAY

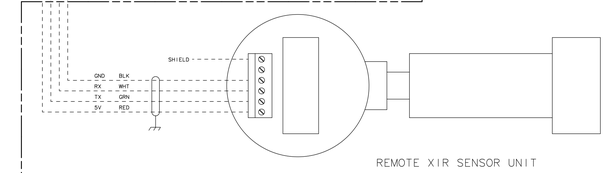

REMOTE XIR SENSOR UNIT

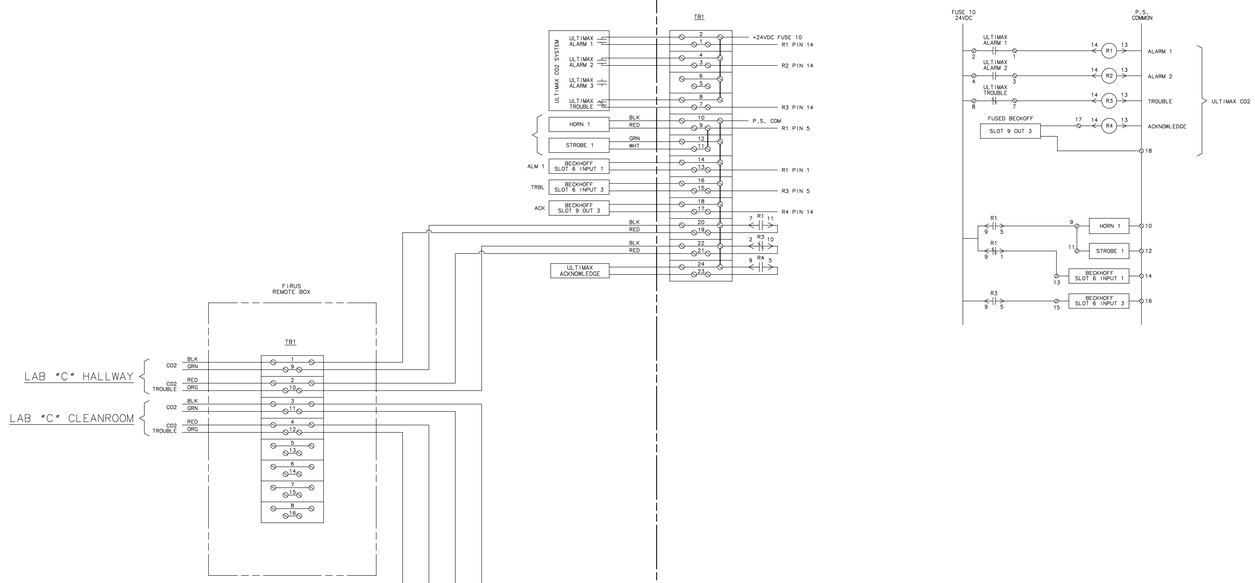

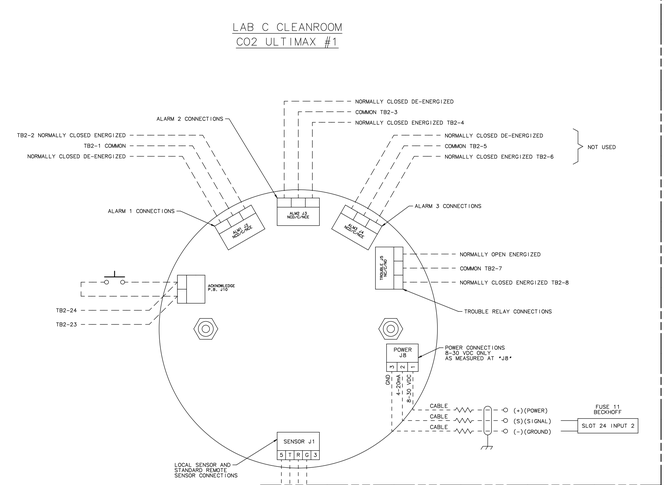

LAB "C" CLEANROOM

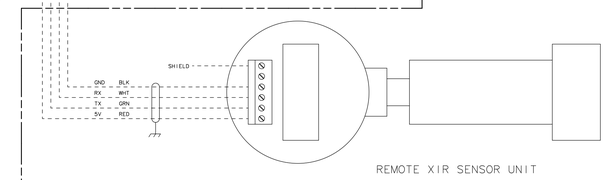

REMOTE XIR SENSOR UNIT

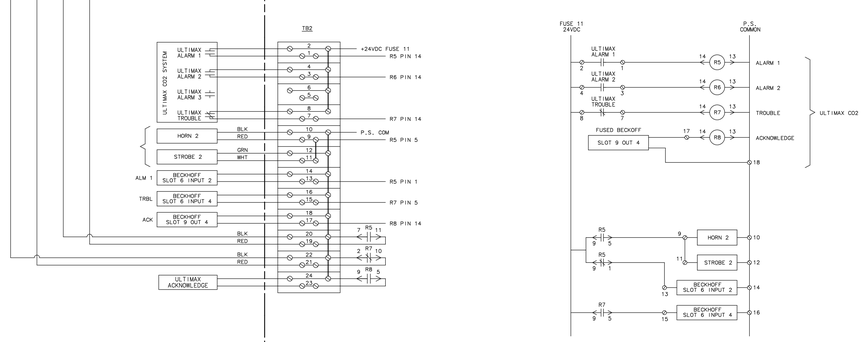

LOGIC TRUTH TABLE				
DEVICE	DISCRIPTION	ON STATE	OFF STATE	COMMENTS
R1, R5	CO2 ALARM 1	ALARM	NORMAL	TRIP POINT=2%
R2, R6	CO2 ALARM 2	ALARM	NORMAL	
	CO2 ALARM 3	ALARM	NORMAL	
R3, R7	CO2 TROUBLE	NORMAL	TROUBLE	
R4, R8	ACK ULTIMAX	ACK	RUN	

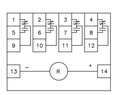

AUTOMATION DIRECT 4 POLE 24VDC
TYPICAL RELAY DIAGRAM
(R1 THRU R5) PART # QM4X1-D24

UNLESS OTHERWISE SPECIFIED	ORIGINATOR	D.MARKLEY	09-AUG-2010
	DRAWN	J.CATALANELLO	09-AUG-2010
± ± ±	CHECKED		
1. BREAK ALL SHARP EDGES MAX.	APPROVED		
2. DO NOT SCALE DRAWING. 3. DIMENSIONS BASED UPON ASME Y14.5M-1994 4. MAX. ALL MACH. SURFACES	USED ON		
5. DRAWING UNITS: U.S.INCH	MATERIAL		

FERMI NATIONAL ACCELERATOR LABORATORY
UNITED STATES DEPARTMENT OF ENERGY

CMS/DETECTORS
PIXEL
CONTROL SYSTEM WIRING WIRING

SCALE	DRAWING NUMBER	SHEET	REV
	9213.750-EE-486150	2 OF 2	

CREATED WITH : Ideas12NXSeries GROUP: PPD/MECHANICAL DEPARTMENT