Fermilab

Particle Physics Division

12-01-01

Mechanical Department Engineering Note

Number: MD-Eng/ 045 Date: May 4, 2004

Project: NuMi

Project Internal Reference:

Title: Target Hall T-Block Support Structure

Author(s): Robert J. Woods

Reviewer(s): Paul F. Lahn

Key Words: NuMi, T-Block, Green/Blue Block and Target Hall

Abstract/Summary:

This is a check of a "NuMI shield block" supporting the load of two steel "T Blocks" in the Target Hall area as shown on drawing ME-433027. The concrete shield block is analyzed for shear, flexural strength, bearing, and deflection.

The deflections computed are for immediate and 5 year deflections due to the self-weight of the block and immediate and 1 year deflections due to the supported load of the "T Blocks".

Applicable Codes:

ACI *Building Code Requirements for Reinforced Concrete* (ACI 318-89)

SERVICE LOADS:

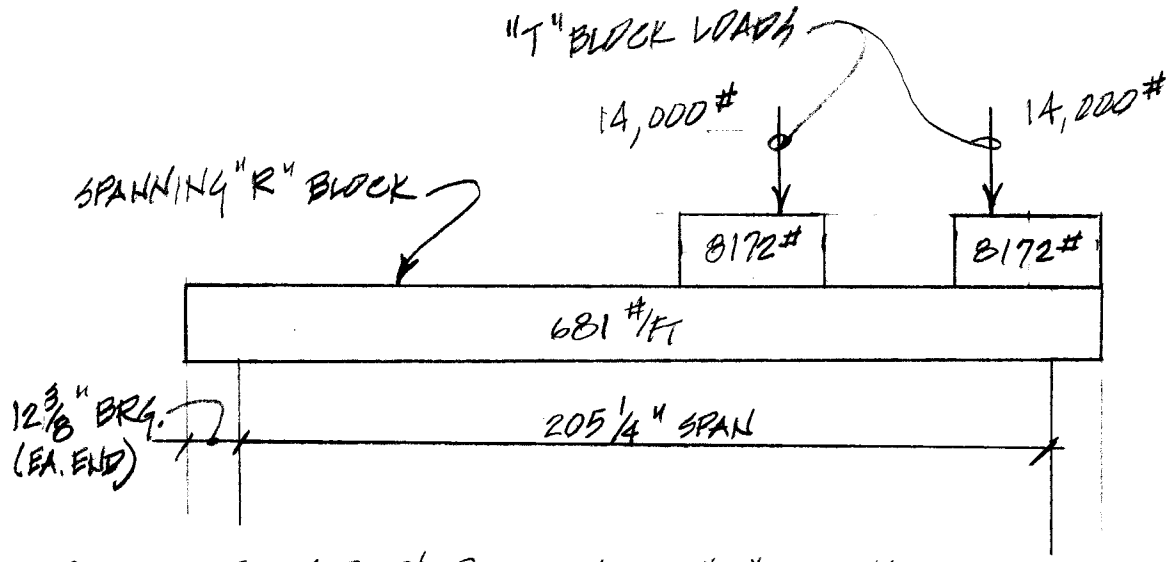

DEAD LOAD OVER 3'-0 WIDTH OF "R" BLOCK:

VERTICAL "R" BLOCK:

TOTAL LOAD = 13050# (FROM DWG. 13-2-5 SC-1)

13050/19.167 = 681 #/FT

681 x 3'-0 = 2043#

HORIZONTAL "R" BLOCKS:

13050/19.167 = 681 #/FT

3(681)(3'-0) = 6129#

8172 #

BEAM (SPANNING "R" BLOCK)

13050/19.167 = 681 #/FT

LIVE LOAD FROM "T" BLOCKS:

FROM SPACING SHOWN ON DWG. 433027:
MAXIMUM NUMBER OF "T" BLOCKS OVER 1
SPANNING "R" BLOCK = 2

MAX. "T" BLOCK WEIGHT FROM DWG. 406182 = 13880#
SAY 14,000#

REACTION ON 3'-0 WIDE "R" BLOCK:

2(14,000/2) = 14,000#

ULTIMATE LOADS:

LIVE: 14000 (1.7) = 23,800#

DEAD: 8172 (1.4) = 11 440#

(UNIFORM) 681 (1.4) = 953#/FT = 79.4#/IN

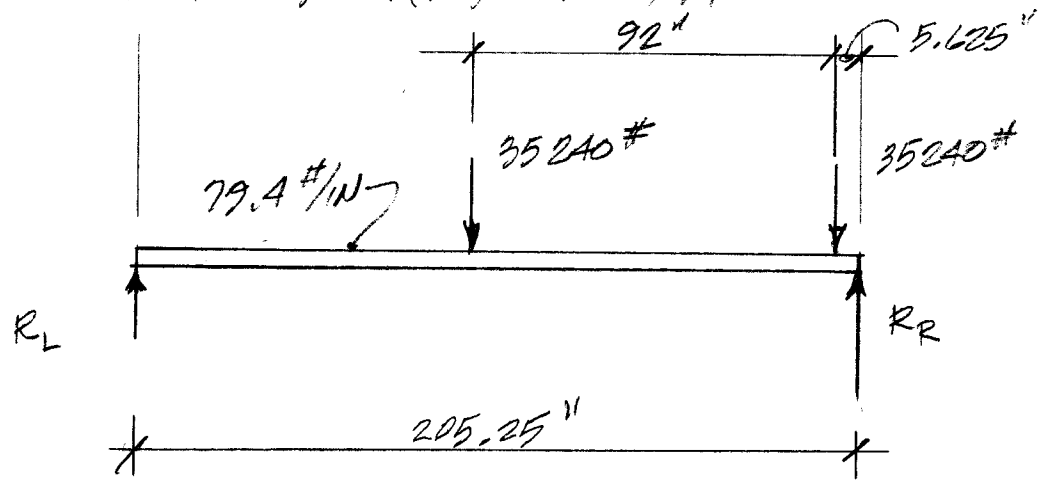

$$R_L = \frac{5.625(35240) + 97.625(35240) + 79.4(205.25)^2/2}{205.25}$$

$$= \underline{25876\#}$$

$$R_R = \frac{107.625(35240) + 199.625(35240) + 79.4(205.25)^2/2}{205.25}$$

$$= \underline{60,901\#}$$

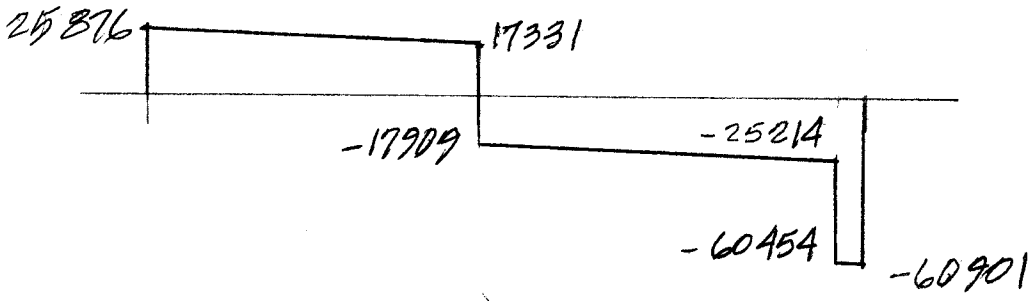

$$M_u = \frac{(205.25 - (92.0 + 5.625))(25876 + 17331)}{2}$$

$$= 2325077 \text{ \#-IN}$$

FOR $f'_c = 5000$ PSI (FROM DWG. 13-2-5 SC-1)
$f_y = 60{,}000$ PSI (" " " ")

$A_s = 8 - \#9$
$= 8(1.0) = 8\ IN^2$ T&B

"d" $= 18'' - (1.5 + 0.5 + 0.564)$
$= 15.436''$

$a = A_s f_y / 0.85 f'_c b$
$= 8(60)/0.85(5)(36)$
$= 3.14''$

$\phi M_n = \phi A_s f_y (d - a/2)$ (ACI 318/318R-91)
$= 0.90(8)(60{,}000)(15.436 - 3.14/2)$
$= 5{,}990{,}112$ #-IN

$5{,}990{,}112 > 2{,}325{,}077$ ($\phi M_n > M_u$)

∴ OK FOR FLEXURE

BEARING:

ALLOWABLE BEARING $= \phi(0.85 f'_c A_1)$ (ACI 318 3.8.2-133)
$= 0.7(0.85(5000)(36)(12.375)$
$= 1{,}325{,}000\ \# > 60{,}901\ \#$ OK

SHEAR:

V_u @ FACE OF SUPPORT $= 60{,}901\ \#$

$V_c = 2\sqrt{f'_c}\, b_w d$
$= 2\sqrt{5000}(36)(15.436)$
$= 78590\ \#$

$\phi V_c = 0.85(78590) = 66{,}799\ \# > 60901\ \#$
$\phi V_c > V_u$ OK

DEFLECTION:

$I_g = 36(18)^3/12$
$= 17496 \text{ in}^4$

$f_r = 7.5\sqrt{f'_c}$ (ACI 318/318R-97)
$= 7.5\sqrt{5000}$
$= 530 \text{ psi}$

$y_t = 9.0$

$M_{cr} = f_r I_g / y_t$
$= 530(17496)/9.0$
$= 1{,}030{,}000 \text{ \#-in}$

$3M_{cr} = 3(1{,}030{,}000)$
$= 3{,}090{,}000 \text{ \#-in}$

IF	THEN
$M_a < M_{cr}$	USE I_g
$M_{cr} < M_a < 3M_{cr}$	USE I_e
$M_a > 3M_{cr}$	USE I_{cr}

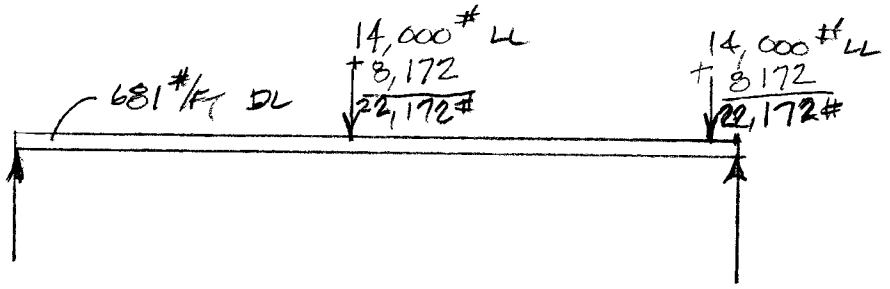

DEAD LOAD MOMENT $= (681/12)(205.25)^2/8$
$= 298{,}842 \text{ \#-in} < M_{cr}$

$\therefore$ USE $I_g = 17496 \text{ in}^4$

FIND I_{cr}:

$n = E_s/E_c = 29{,}000{,}000/57{,}000\sqrt{5000}$
$= 7.20$

$\rho = A_s/bd = 8.0/36(15.436)$
$= 0.014$

$\rho n = 7.2(0.014)$
$= 0.104$

$k = \sqrt{(\rho n)^2 + 2\rho n} - \rho n = 0.364$

$j = 1 - k/3 = 1 - 0.364/3 = 0.879$

$I_{cr} = bk^2 j d^3/2 = 36(0.364)^2(0.879)(15.436)^3/2$
$= 7710 \text{ \#-in}$

DEAD LOAD DEFLECTION

$$\Delta = \frac{5(681)(205.25/12)^4(1728)}{384(4{,}030{,}000)(17496)}$$

$$= 0.02'' \quad \text{(IMMEDIATE)}$$

FOR LONG TERM (12 MONTHS)

$$\Delta_{LT} = \Delta_i(\lambda) + \Delta_i \quad \text{WHERE } \lambda = \frac{\xi}{1+50\rho'}$$

$$= 0.82(0.02) + 0.02$$

$$= 0.036''$$

$$= \frac{1.4}{1+50(0.014)}$$

$$= 0.82$$

LIVE LOAD MOMENT:

$$M_{MAX} = R_L a \qquad R_L = \frac{5.625(14{,}000) + 97.625(4900) + 5.625(8172)\frac{205.25}{205.25} + 97.625(8172)}{205.25}$$

$$= 11{,}154(107.625)$$

$$= 1{,}200{,}450 \text{ \#-IN}$$

$$= 11{,}154 \text{ \#}$$

$$a = 205.25 - (5.625 + 92)$$

$$= 107.625$$

GIVEN:

CONCRETE BEAM

$E = 4,030,000$ PSI

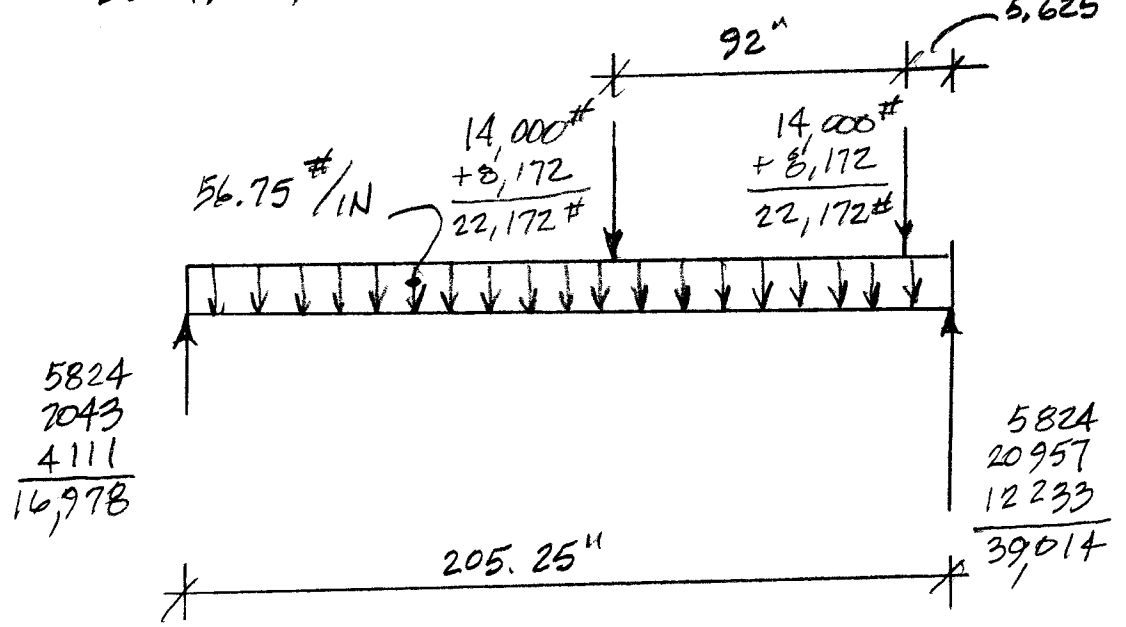

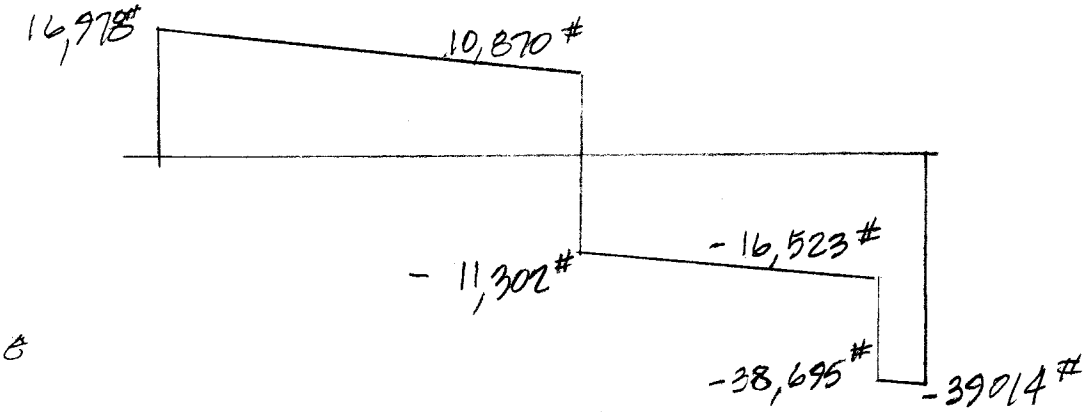

FIND I_e

$$\text{MAX MOMENT} = 107.625(16,978+10870)/2$$

$$= 1,498,570 \ \#\text{-IN} > M_{cr}$$

$$\therefore \quad I_e = \left(\frac{M_{cr}}{M_a}\right)^3 I_g + \left[1-\left(\frac{M_{cr}}{M_a}\right)^3\right] I_{cr}$$

$$= \left(\frac{1030000}{1498570}\right)^3 (17496) + \left[1-\left(\frac{1030000}{1498570}\right)^3\right] 7710$$

$$= 5681 \quad + 5207$$

$$= 10,888 \text{ IN}^4$$

FIND IMMEDIATE DEFLECTION OF DL + LL

USE ANSYS ANALYSIS:

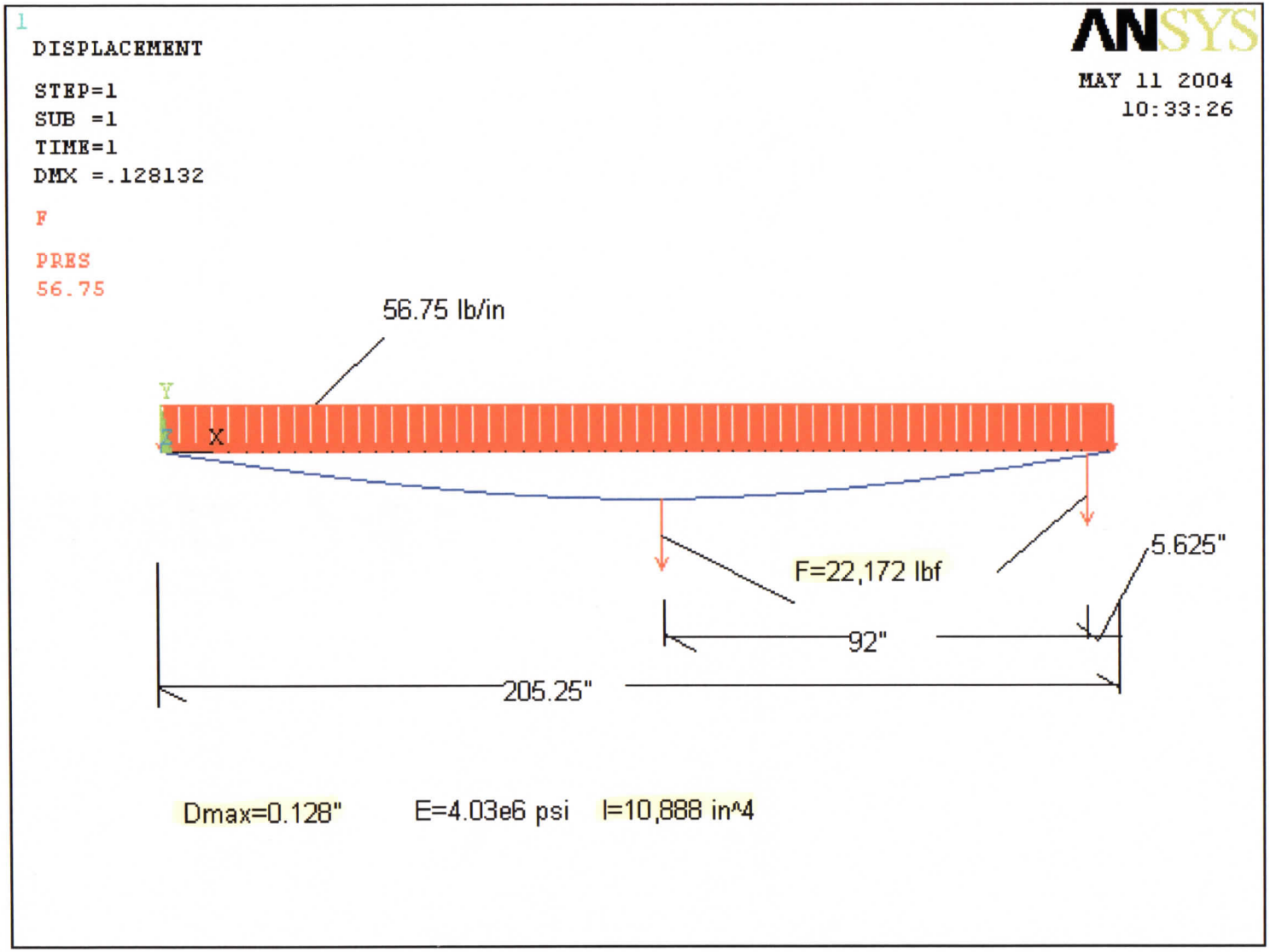
1
DISPLACEMENT
STEP=1
SUB =1
TIME=1
DMX =.128132
F
PRES
56.75
ANSYS
MAY 11 2004
10:33:26
56.75 lb/in
Y
X
F=22,172 lbf
5.625"
92"
205.25"
Dmax=0.128"
E=4.03e6 psi
I=10,888 in^4

7

FIND 12 MONTH COMBINED Δ:

IMMEDIATE Δ = 0.128"

$\lambda = \xi/(1+50\rho')$ (ACI 9-10 p.97)

$\xi = 1.4$ FOR 12 MONTHS

$= 1.4/(1+50(0.014))$

$= 0.824$

TOTAL $= 0.128 + 0.824(0.128)$

$= 0.23''$

$\ell/240 = 205.25/240$

$= 0.855'' > 0.23''$ ok