Fermilab

Particle Physics Division
Mechanical Department Engineering Note

Number: MD-ENG-043-002 Date: 23 April, 2004

Project Internal Reference:

Project: NuMI

Title: Cart Engineering Note for the absorber installation using the winch.

Author(s): Dave Pushka

Reviewer(s): RWLD

Key Words:

Abstract Summary: Structural calculations for the cart used to transport blocks up the 10.8% grade to the absorber cavern.

Applicable Codes: AISC 9th Edition ASD

NOTE
MODIFIED TO CARRY
TWO 10 TON BLOCK

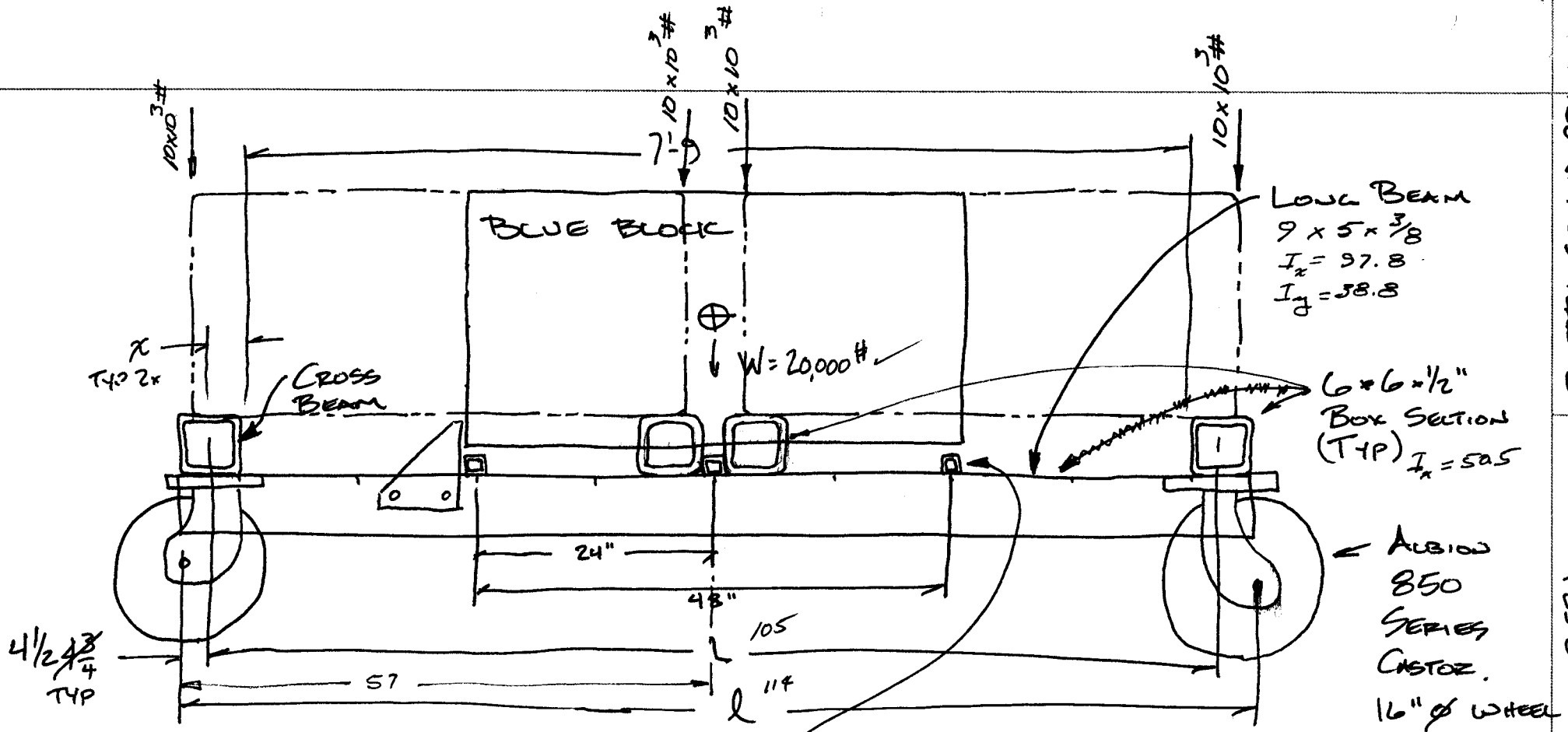

* BOTH WHEELS SHOWN TURNED OUT TO LOOK AT THE WORST CASE MOMENT ON THE LONG BEAM.

REAR WHEELS WILL REALLY BE RIGID (NON-SWIVEL) CASTORS. W/O ANY SWIVEL LEAD.

3 x 3 x 1/4 BOX SHIMS TO GIVE SPACE FOR FORK TRUCK TINES (TYP 3x). EACH TO BE 54" LONG W/ 4" WIDE x 6" TALL x 1/2" THK PLATE @ EA. END (NOT SHOWN) TO KEEP BLUE BLOCK CENTERED.

SIDE VIEW

NUMI ABS PLAN B | 4-23-04 | D. PUSHER | Pg #1

Long Beam:

$P = 20{,}000\# / 2 \text{ beams} = 10{,}000\# / \text{beam}$

$L = 8.25'$

Simple Ends: $M_{max} = \frac{Pl}{4}$

$$\delta = \frac{Pl^3}{48EI}$$

$$\sigma = \frac{My}{I}$$

$\sigma_{allow} = 0.6 F_y \Rightarrow F_y = 46{,}000$ psi

$\therefore \sigma_{allow} = \underline{27{,}600}$ psi

Try 6" × 6" × 1/2" Wall Box Section

$I = 50.5 \text{ in}^4$

$l = L + 2(4.5") = 8'\text{-}3 + 9" = 9'\text{-}0 = 108 \text{ in}$

$M_{max} = \frac{1}{4}(10{,}000\# * 108 \text{ in}) = 270{,}000$ in-lbs

$\sigma = \frac{My}{I} = \frac{(270{,}000 \text{ in-lbs})\, 3 \text{ in}}{50.5 \text{ in}^4} = 16{,}071.4$ psi

16,040

$\sigma < \sigma_{allow} \therefore$ OK

$\delta = \frac{Pl^3}{48EI} = \frac{(10{,}000\#)(108^3)}{48 * 29 * 10^6 * 50.5 \text{ in}^4} = 0.179 \text{ in} \quad \therefore$ OK

Long Beam: – Continued w/ Actual Beam

Actual Available Section (from Scrap @ MAB)
is ▱ 9 × 5 × 3/8 A500 Box Section

$I_{YY} = \cancel{59.4}\ in^4$

$I_{XX} = 97.8\ (9 \times 5 \times 3/8)$

$$\sigma = \frac{My}{I} \rightarrow \frac{(270{,}000\ \text{in-lbs})\,\cancel{5}\ 4.5\ in}{\cancel{59.4}\ 97.8\ in^4} = \cancel{13{,}636}\ 12{,}423\ psi$$

$$\delta = \frac{Pl^3}{48EI} = \frac{(10{,}000\#)(108^3)}{48 \times 29 \times 10^6 \times \cancel{59.4}\ 97.8\ in^4} = \cancel{0.152}\ .093''$$

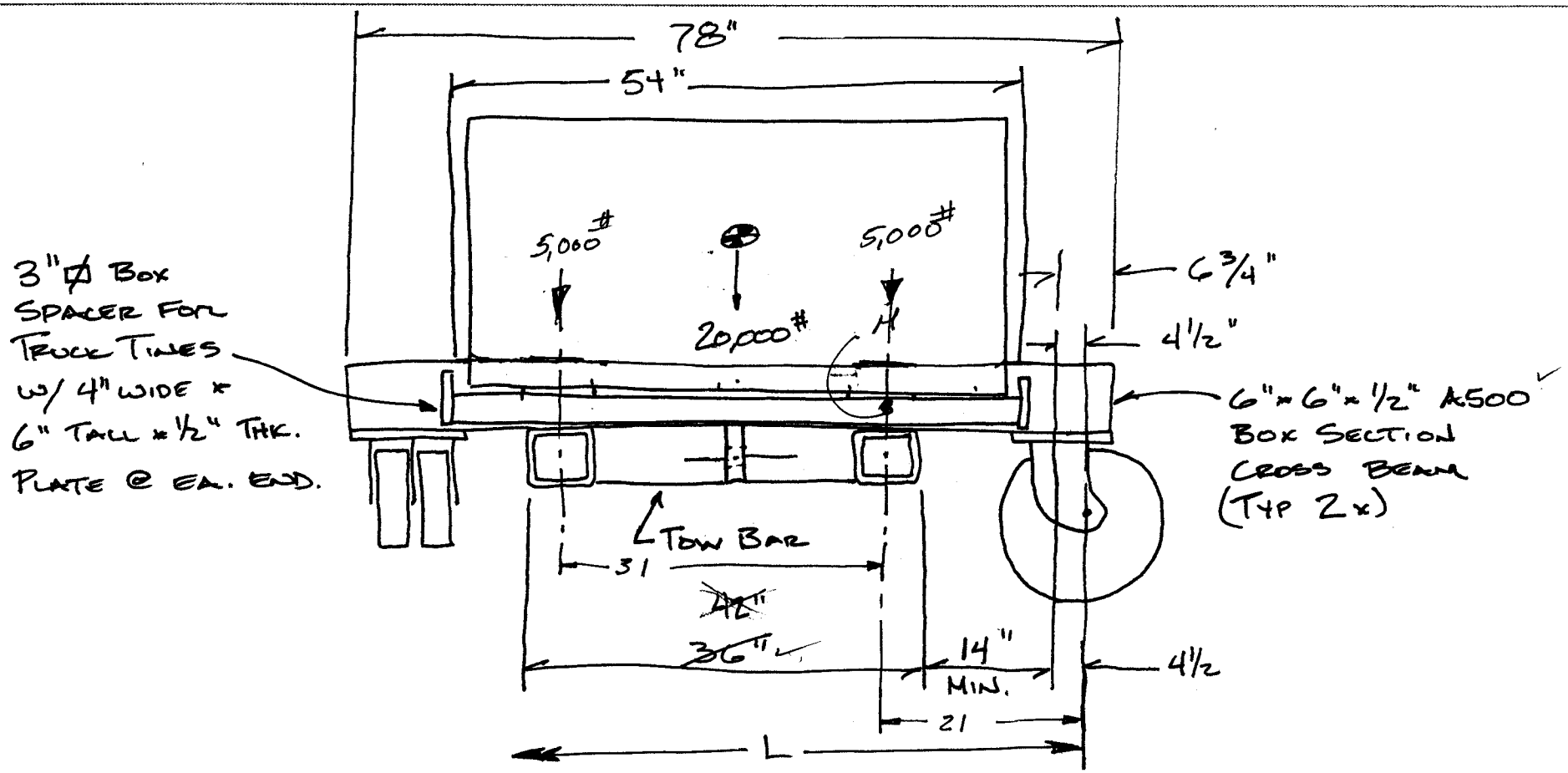

$L = 36" + 14" + 14" + 4\frac{1}{2}" + 4\frac{1}{2}" = 73"$

$M = 21 \times 5 \times 10^3 + 31 \times 5 \times 10^3 = (31+21)5 \times 10^3$
$= 260 \times 10^3$ in-lb

END VIEW

NuMI Abs Ram B | 4-23-04 | D. Pushka | Pg #4

Cross Beam:

$P = 20{,}000\,\# \,/\, \cancel{2 \text{ BEAMS}} = \cancel{10{,}000\,\#/\text{BEAM}}$

$L = 73''$

Simple Ends: $M_{MAX} = \dfrac{Pl}{4}$

$$\delta = \frac{Pl^3}{48EI}$$

$$\sigma = \frac{My}{I}$$

$\sigma_{ALLOW} = 0.6\,F_y \Rightarrow F_y = 46{,}000$ psi

$\therefore \sigma_{ALLOW} = 27{,}600$

Try 6" * 6" * 1/2" A500 Box Beam

$I = 50.\cancel{4}_{5}\ in^4$

$$M_{MAX} = \frac{1}{4}\left(\frac{20{,}000\,\#}{\cancel{2}\,4}\right) * 73'' = \frac{\overset{1{,}460{,}000}{\cancel{730{,}000}}}{\underset{16}{\cancel{48}}}\ \text{in-LBS}$$

$$= \overset{91{,}250}{\cancel{182{,}500}}\ \text{in-LBS}$$

$$\sigma = \frac{My}{I} = \frac{(\overset{91{,}250}{\cancel{182{,}500}}\ \text{in-LBS})\ 3\text{in}}{50.4\ in^4} = \cancel{10{,}863}\ \text{psi}$$

5,421 psi (ASSUMES LOAD @ CTR)

15,446 psi (WITH MOMENT FROM Pg #4)

$$\delta = \frac{Pl^3}{48EI} = \frac{(10{,}000)(73\ in)^3}{48 * 29 * 10^6\ psi * 50.4\ in^4} = 0.055\ \text{in}$$

$\sigma < \sigma_{ALLOW}$; $\delta < 1/2''$ $\therefore$ OK

WELD BTW CROSS & LONG BEAMS:

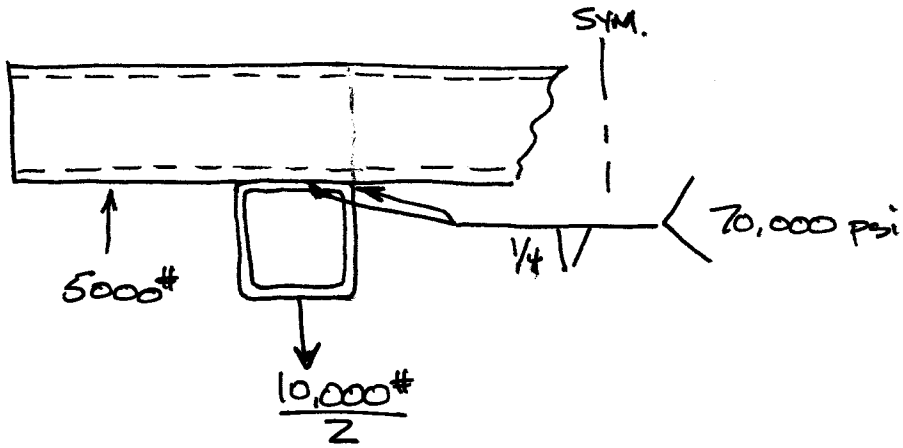

STATIC LOAD = 5000 # ✓

~~70,000~~ psi FILLER METAL
72,000

FILLET WELD, 4 SEGMENTS, 6" LONG EA

$l = 4 \times 6 = 24"$

$P = w" \times l" \times .707 \times 0.3 \times 70{,}000$ psi

TRY $w = 1/4"$
⇒

$P = 1/4 \times 24 \times .707 \times 0.3 \times 70{,}000$ psi ✓

$P = 85{,}518$ # ✓

$85{,}518 \# >> 5000 \#$ ✓

∴ A 1/4" FILLET ALL AROUND IS OKAY. ✓

Tow Bar:

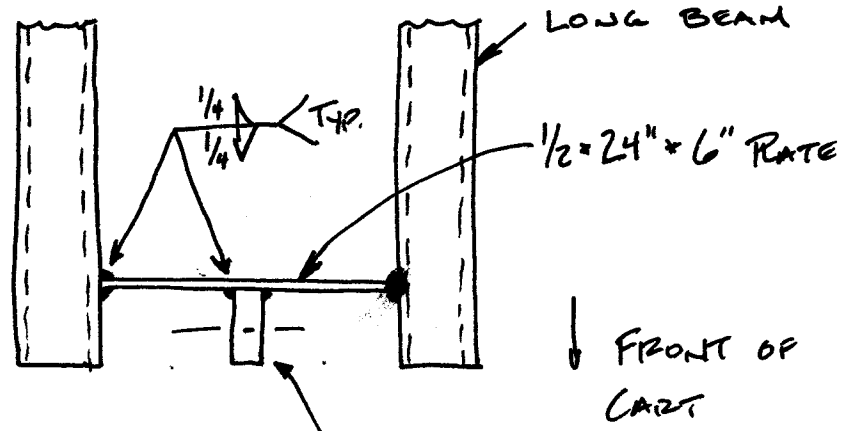

Welds to bottom of cross beam omitted for clarity - use 1/4" fillets.

6" x 6" x 1" Thk Lug w/ 1" ø Hole for 7/8" Shackle.

Plan View

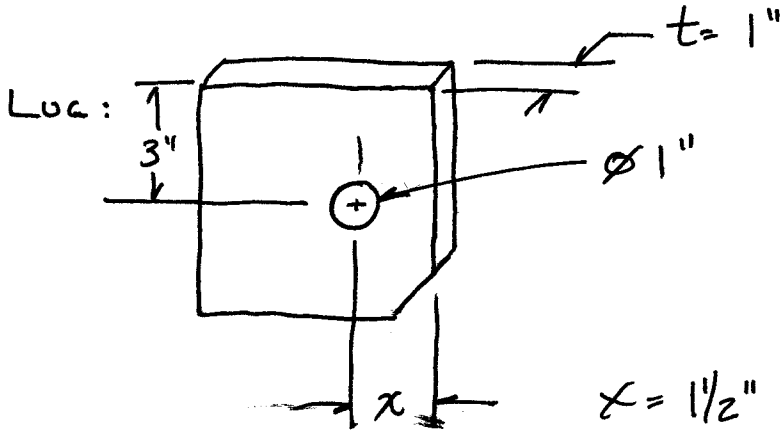

Load on shackle = ~~2500~~ 6800# pull

$\sigma = \frac{2500\#}{(6-1")(1")} = \cancel{500}\ 1300$ psi

$\tau = \frac{2500\#}{2\cdot(1" * x)} = \frac{\cancel{2500}\ 6800}{2x}$ psi If $x = 1"$ $\tau = \cancel{1250}\ 3400$ psi

$x = 1\frac{1}{2}"$ $\tau = \cancel{833}\ 2{,}267$ psi

$\sigma_{allow} = 10{,}000$ psi ∴ OK ✓

Tow Bar Detail:

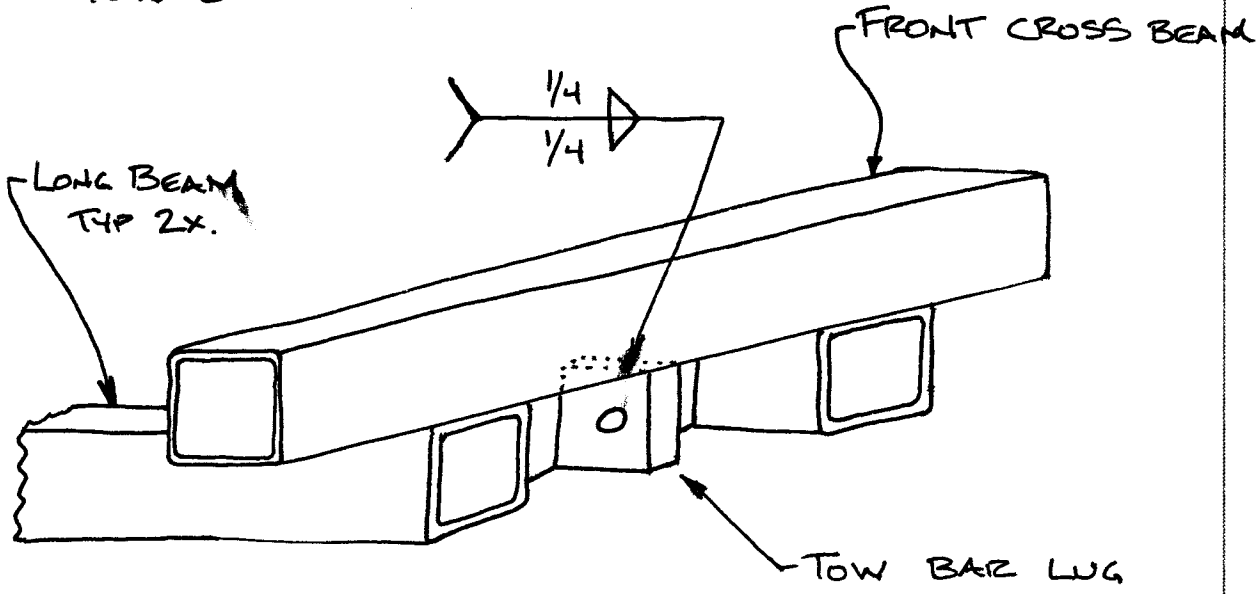

Load on Shackle = ~~2500~~ 6800 #

Weld Shear Load = ~~2500~~ 6800 #

Allowable Shear ~~Stress~~ = $w \cdot l \cdot .707 \cdot 0.3 \cdot 70{,}000$ psi

$= 1/4 \cdot 2 \cdot 6'' \cdot .707 \cdot 0.3 \cdot 70{,}000$

$= 44{,}541$ #

44,541 # > ~~2500~~ 6800 # ∴ OKAY.

Consider Prying →

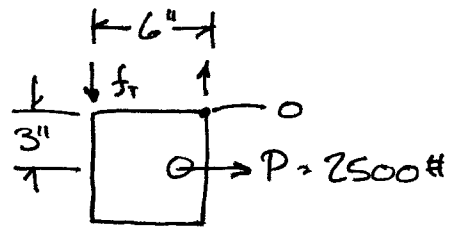

$\Sigma M_o = 0 = 6 f_T - 3P$

$f_T =$ ~~1250~~ 3400 #

Assume 1/2" long weld on both sides

$P = 2 \cdot w \cdot l \cdot .707 \cdot 0.3 \cdot 70{,}000$ psi

$2 \cdot 1/4 \cdot 1/2'' \cdot .707 \cdot 0.3 \cdot 70{,}000 = 3711$ # > ~~1250~~ 3400 # ∴ OK

CONSIDER BENDING ON FRONT CROSS BEAM

DUE TO LOAD FROM TOW BAR.

$P = \overset{6800}{\cancel{2500}}\#$, $L = 42'' - (2)9'' = 24\#$

$$M_{MAX} = \frac{Pl}{4} = \frac{(\overset{6800}{\cancel{2500}}\#)(24'')}{4} = \overset{40{,}800}{\cancel{1500}} \text{ in-LBS}$$

$$\sigma = \frac{My}{I} = \frac{(\overset{40{,}800}{\cancel{1500}} \text{ in-LBS})(3'')}{50.4 \text{ in}^4} = \overset{2{,}424}{\cancel{892}} \text{ psi}$$

$\overset{2{,}424}{\cancel{892}}$ psi $\ll \sigma_{ALLOWABLE}$ $\therefore$ OK ✓

BRAKE :

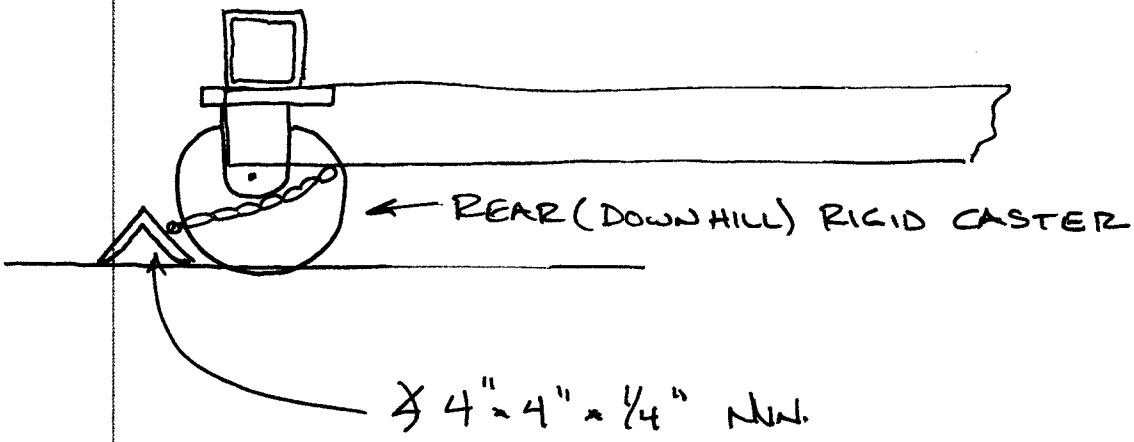

ATTACH W/ 2 CHAINS TO THE LONG BEAMS TO DRAG THE ∡ ABOUT 2" BEHIND THE CASTER WHEELS.

FIELD TO DETAIL & INSTALL & TEST ALONG W/ A MEANS TO ALLOW CART TO GO DOWN HILL INTENTIONALLY.

Detail of Caster - As measured:

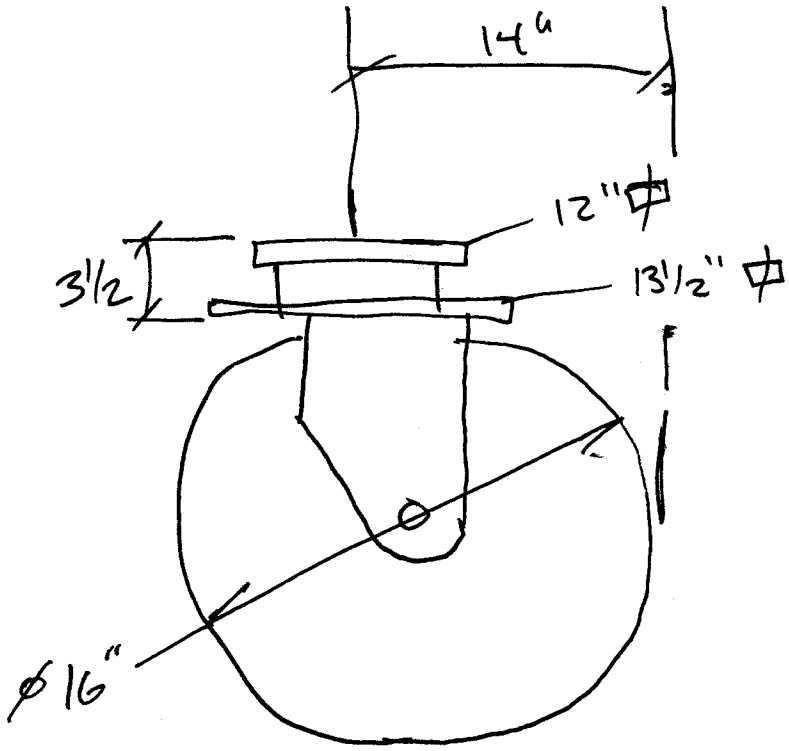

FERMILAB
ENGINEERING NOTE

SECTION	PROJECT	SERIAL-CATEGORY	PAGE

SUBJECT

NAME: E.M. Villegas

DATE: 6/7/04

REVISION DATE

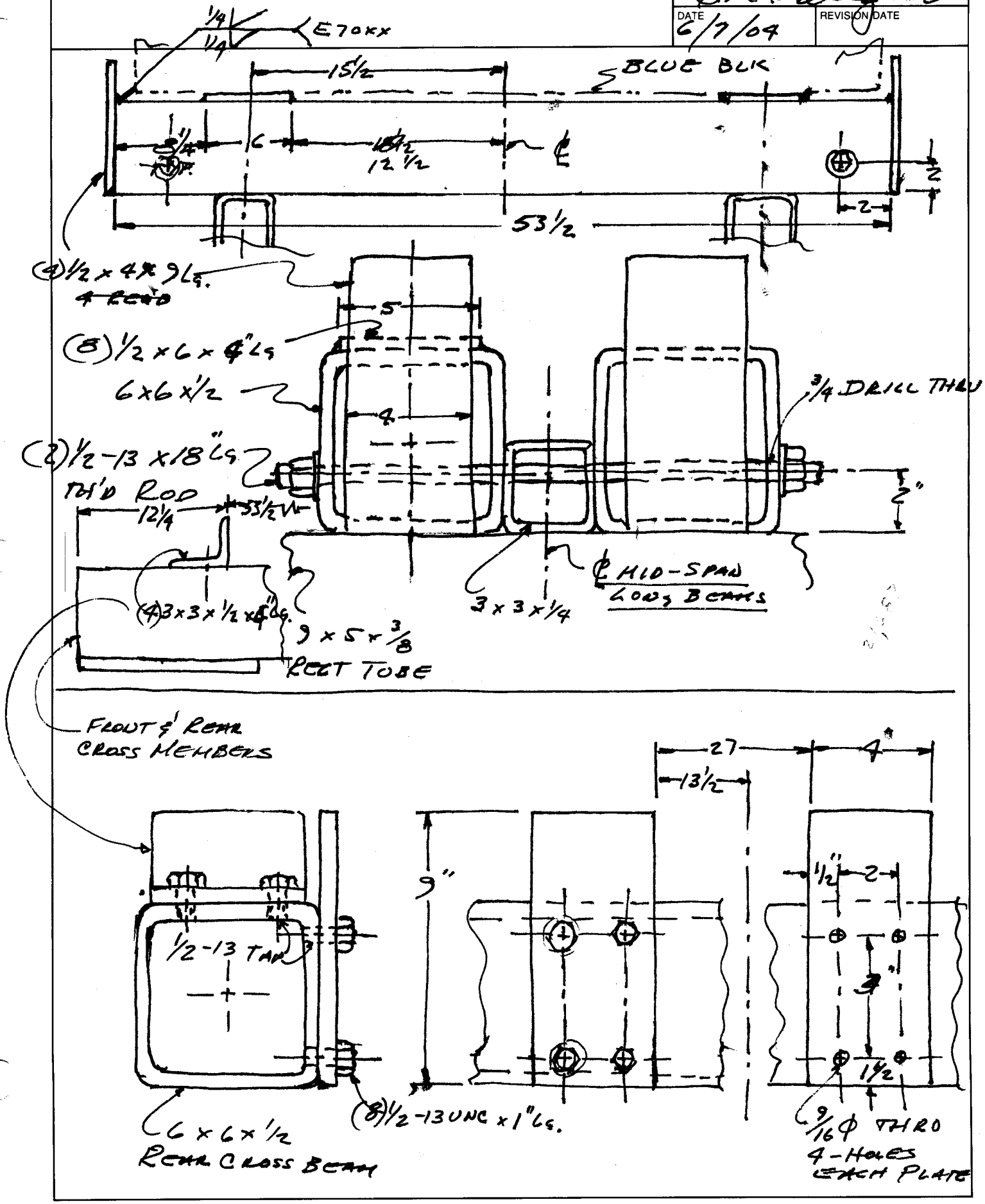

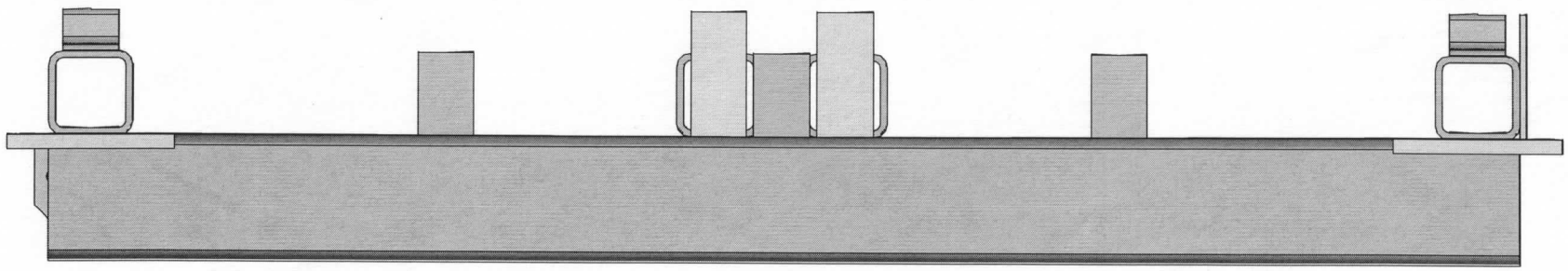

Plotted by villegas on 08-Jun-04 , File: generic.pff

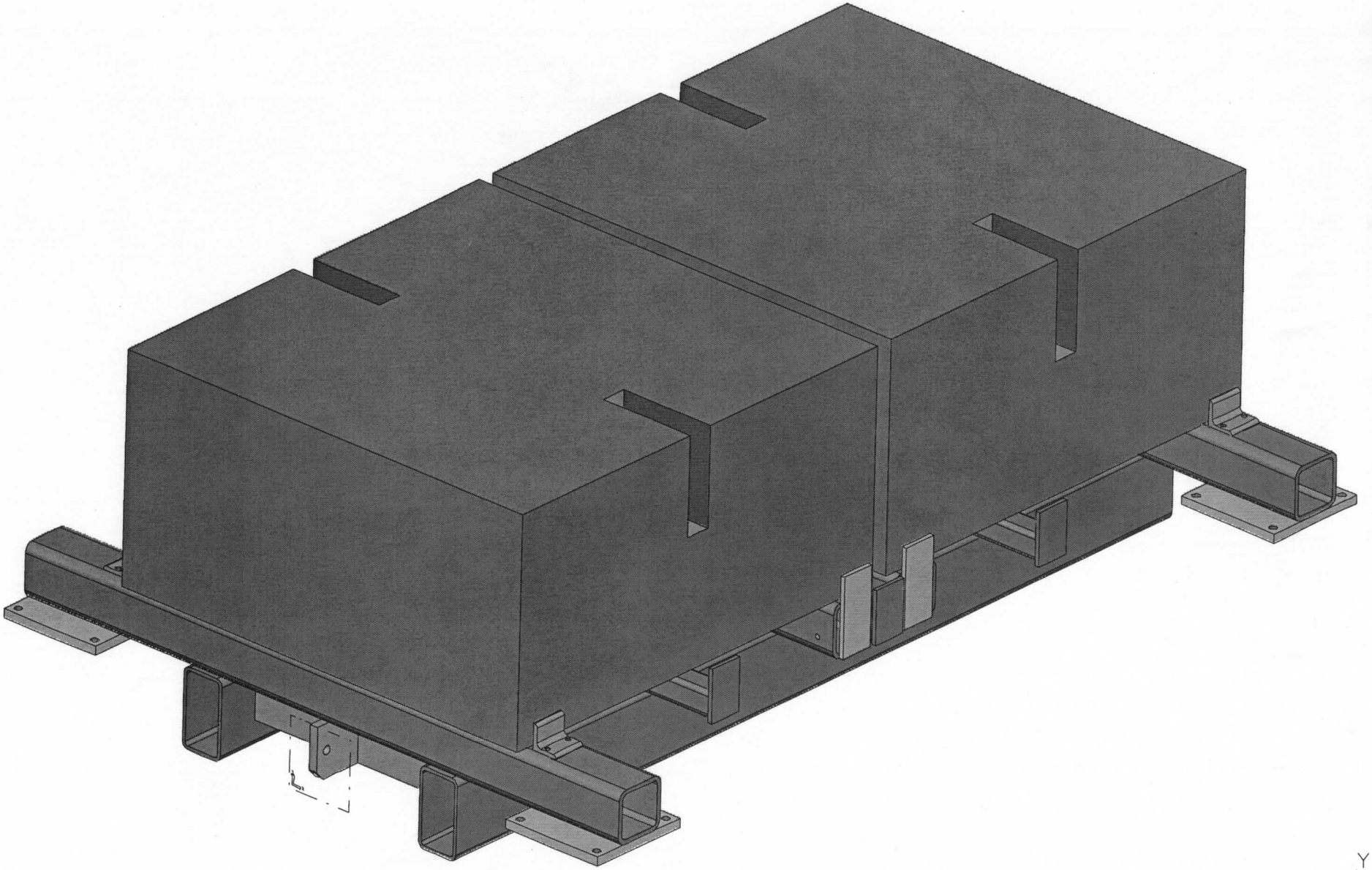

Plotted by villegas on 07-Jun-04 , File: generic.pff

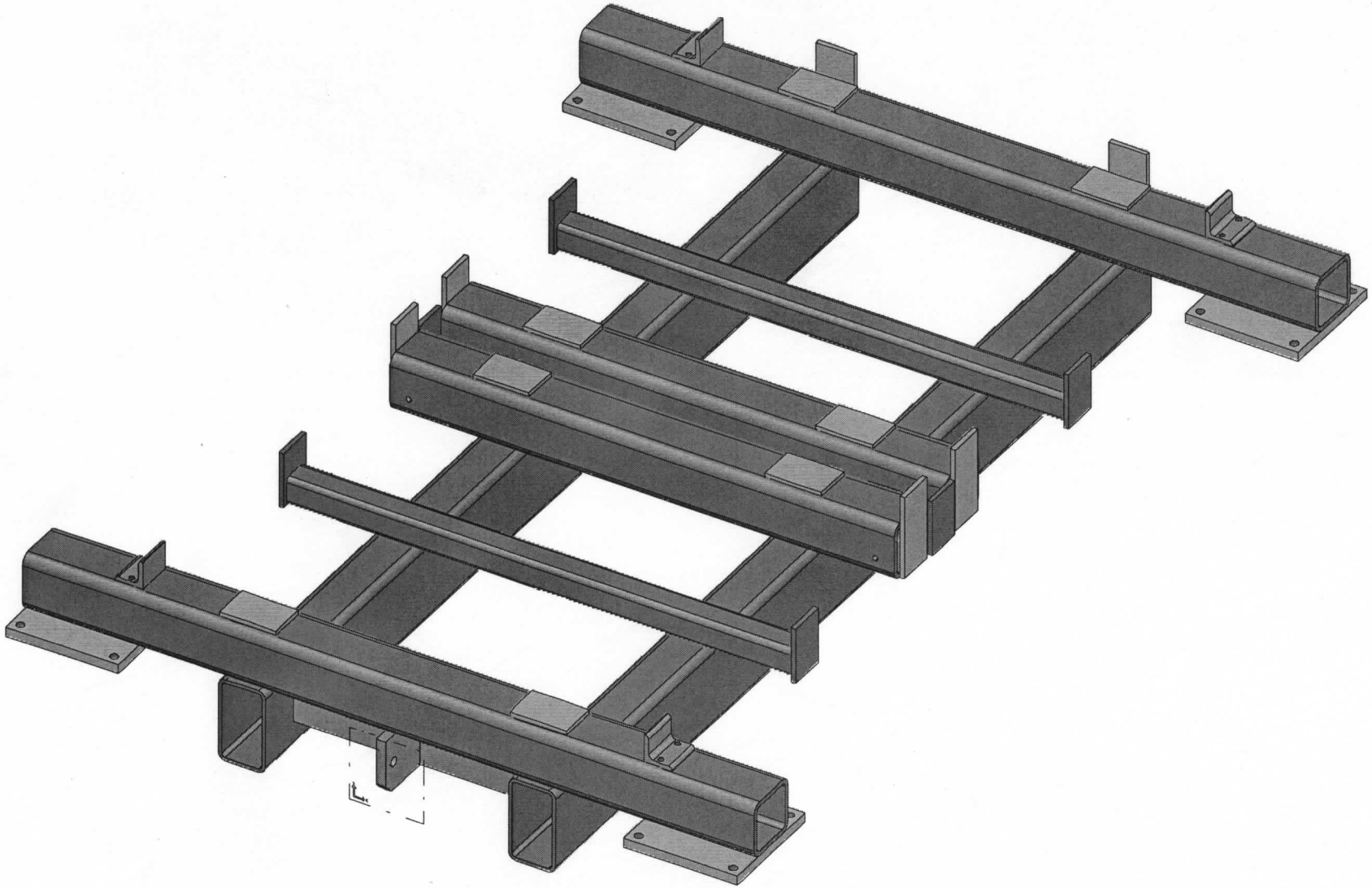

Plotted by villegas on 08-Jun-04 , File: generic.pff

FERMILAB
ENGINEERING NOTE

SECTION	PROJECT	SERIAL-CATEGORY	PAGE

SUBJECT: WINCHING LOADS

NAME: E. W. Villegas

DATE: 1/25/01

REVISION DATE:

$21\frac{1}{2}$ TON = 43×10^3 #
(2) BLUE BLOCKS

W = $11\frac{1}{2}$ TON = 23×10^3 #

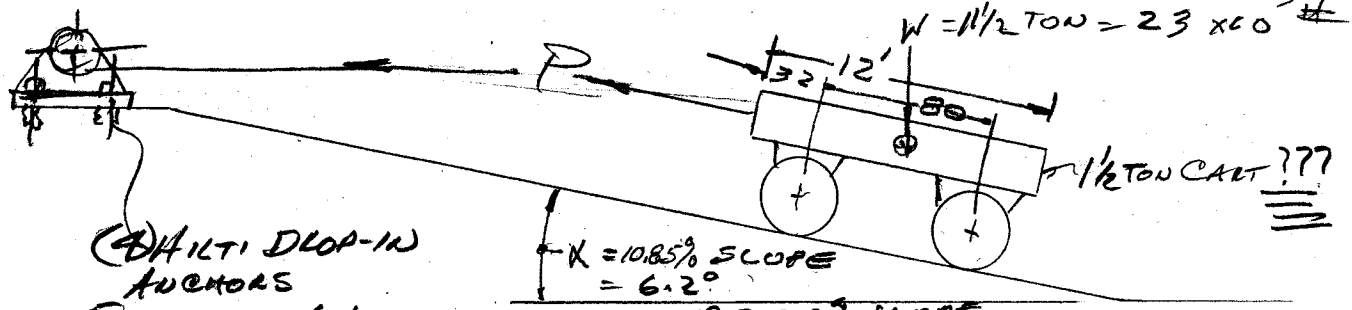

(4) HILTI DROP-IN ANCHORS
5/8 BOLT MIN.
2220# SHEAR PER ANCHOR.

α = 10.85% SLOPE
= 6.2°
= 5.03° @ 8.8% SLOPE

$P = W \sin\alpha + \mu (W \cos\alpha)$

10,158# @ BOTTOM

where μ = ~~.05~~ SEE BELOW (HILMAN ROLLER)

622 = 3627# @ 10.85 SLOPE
7465# SAY ~~3700~~ #

ASSUMES 2000 PSI CONCRETE

4712# @ 8.8% SLOPE

10,000
6,900
5,200

WINCH PULLING RANGE IS: 11,000# — 5800#

DYNAMOMETER READINGS WITH ONE BLUE BLOCK
5440# AT BOTTOM
VARIED ON SLOPE FROM 4,000 TO 3000#

RATCHET & PAWL ON WHEELS, REAR
1 FORWARD
1 BACKWARDS

USING MEASURED ~~LOADS~~ FORCES TO CALCULATE COEFFICIENT OF ROLLING FRICTION μ:

$5440 = 23000 \times \sin 6.2 + \mu\, 23000 \times \cos 6.2°$

μ = .129 @ 5440#
μ = .044 @ 3500#
μ = .066 @ 4000#
μ = .022 @ 3000#
.093 @ 3000# & 5.03° (8.8%)

I-DEAS 9 m3: Simulation 09-Jun-04 10:36:47
/cadwhs/server04/ms_villegas/TRANSPORT_CART_ASSY.mf1
TRANSPORT_CART

Group ID : None
Result Set : 2 - B.C. 1,STRESS_2,LOAD SET 1
Report Type : Contour Units : IN
Result Type : STRESS
Frame of Reference: Part Data Component: Von Mises

	Max Prin	Mid Prin	Min Prin	Max Shear (ALLOWED 14.4 x10^3)	Von Mises (ALLOWED 21.6 x10^3)	DEFORMATIO
	38516	297	130	655	655	.076
Maximum	1.399E+04	1.018E+04	6.555E+03	1.301E+04	2.281E+04	
	8839	570	655	12749	12749	
Minimum	-6.120E+03	-1.204E+04	-2.777E+04	4.737E+00	8.513E+00	
Average	1.507E+03	-4.463E+01	-1.570E+03	1.538E+03	2.881E+03	

/cadwhs/server04/ms_villegas/TRANSPORT_CART_ASSY.mf1

RESULTS: 2- B.C. 1,STRESS_2,LOAD SET 1

STRESS - MAX SHEAR MIN: 4.74E+00 MAX: 1.30E+04

DEFORMATION: 1- B.C. 1,DISPLACEMENT_1,LOAD SET 1

DISPLACEMENT - MAG MIN: 0.00E+00 MAX: 7.61E-02

FRAME OF REF: PART

VALUE OPTION:ACTUAL

Plotted by villegas on 09-Jun-04 , File: generic.pff

cap. to 30000 lbs

Shockmaster™ Kingpinless-style Caster

Lasts Up To 10 Times Longer Than The Competition!

ALBION

850 series

This dual wheel caster has been designed with features tailored to meet the varied needs of the aviation ground support equipment industry. Equally at home in other extremely abusive and rugged applications.

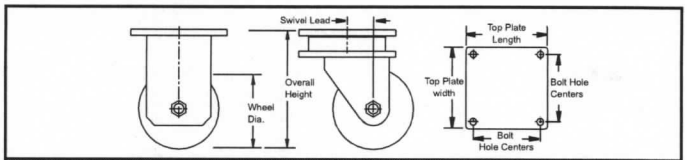

	Top Plate Size (inches)	Slotted Bolt Hole Centers (inches)	Attaching Bolt Size (inches)
Standard Top Plate	12 x 12	10 x 10	3/4

capacity to 30000 lbs

SELECT FEATURES & BENEFITS

Top Plate - 3/4" thick top plate AISI 1045 steel one-piece forged precision machined and through-hardened for long life **Yoke Base** - AISI 1045 steel forging welded, using 100,000 psi weld filler, to 3/4" thick adapter plate **Swivel Section** - 7/8" ball bearings mounted in a 7" diameter precision raceway **Legs** - 3/4" thick steel welded to yoke base using 100,000 psi weld filler, welded inside and out **Axle** - 1-1/4" diameter

SELECT OPTIONS

"F" Face contact brake **Swivel Lock-** Specify **"L"** if ordered with caster. Specify **"SL8500000"** for field installation. Fits standard top plate, requires notched yoke base **NY850** Notched yoke base **"PREV"** Prevenz™ Antimicrobial wheel **Dual wheel configurations available**

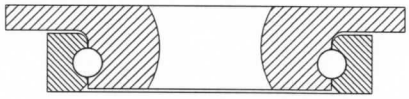

SELECT APPLICATIONS

Custom applications, Towable transportation equipment, Aircraft wing jacks and dollies, Aircraft assembly fixtures, Aircraft work platform stands

SELECT BEARING TYPES

Designate bearing preference by substituting number in parenthesis for colored digits below

Straight Roller (01)

Tapered Roller (09)

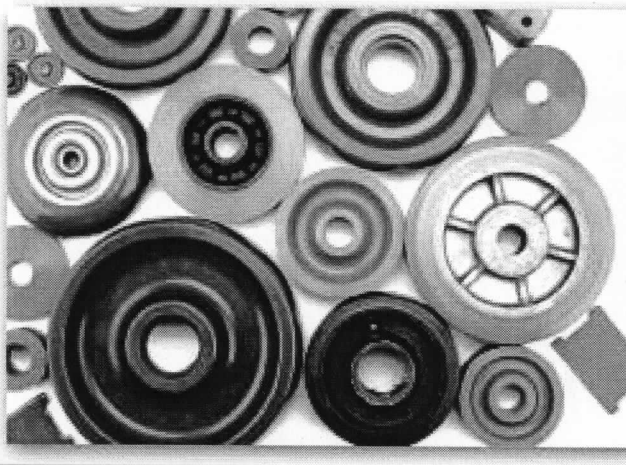

POLYURETHANE EXPERTS

Albion Industries knows polyurethane. With more than 50 years experience leading the caster and wheel industry, our customers are depending on us to keep business on the move. Although this catalog focuses on our wheel capability, ALBION polyurethane expertise is applied to a wide range of industrial products in a variety of shapes and sizes.

SELECT WHEEL TYPES

Rubber/ Iron

Polyurethane/ Iron

Thick Tread Polyurethane

Drop Forged

Polyurethane Press-On

Shockmaster™ Kingpinless-style Caster

Lasts Up To 10 Times Longer Than The Competition!

ALBION®

850 series

cap. to 30000 lbs

For swivel caster add 'S' to the end of the part number.
For rigid caster add 'R' to the end of the part number.

specifications continued from preceding page

Wheel			Capacity (Rated for manual operation)	Overall Height (inches)	Wheel Hub Length (inches)	Swivel Lead (inches)	Caster Number	
Diameter (inches)	Width (inches)	Type					Tapered Bearing	Straight Roller
6	3	HD Drop Forged	30000	14-3/4	4-1/2	3-1/4	850FH06509	
10	4	HD Drop Forged	30000	14-3/4	4-1/2	3-1/4	850FH10709	
12	4	Mold-on Rubber/Iron Core	3200	15-3/4	4-1/2	3-1/4	850MR12709	850MR12701
	4	Polyurethane/Iron Core	9600		4-1/2		850PY12709	850PY12701
	4	Thick Tread Polyurethane	9600		4-1/2		850PX12709	850PX12701
	4-1/2	Press-on/Polyurethane	6600		4-1/2		850OG12709	
	5	Polyurethane/Iron Core	12000		5-1/2		850PY12809	850PY12801
	5	Thick Tread Polyurethane	12000		5-1/2		850PX12809	850PX12801
	6	Polyurethane/Alum Core	15000		6-1/2		850PA12909	
16	4	Mold-on Rubber/Iron Core	3980	19-3/4	5-1/4	4-1/2		850MR16701
	4	Polyurethane/Iron Core	11940				850PY16709	850PY16701
	4	Thick Tread Polyurethane	11940				850PX16709	850PX16701
	5	Mold-on Rubber/Iron Core	5140					850MR16801
	5	Polyurethane/Iron Core	15400				850PY16809	850PY16801
	5	Thick Tread Polyurethane	15400				850PX16809	850PX16801
18	5	Mold-on Rubber/Iron Core	5600	22	5-1/4	5-1/4		850MR18801
	5	Polyurethane/Iron Core	16800		5-1/4	5-1/4	850PY18809	850PY18801
	9	Press-on/Polyurethane	20000		6-1/4	4-1/2	850OG18909	

For alternate or custom caster configurations, please consult factory.

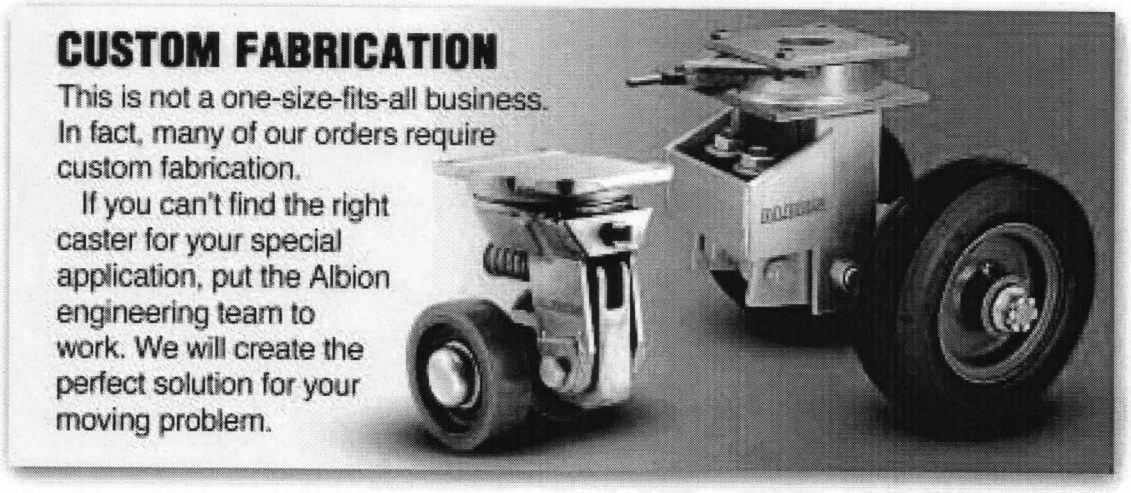

CUSTOM FABRICATION

This is not a one-size-fits-all business. In fact, many of our orders require custom fabrication.

If you can't find the right caster for your special application, put the Albion engineering team to work. We will create the perfect solution for your moving problem.

Fer ab

PURCHASE QUISITION

Requisition

Requisition Number (Filled in by System)	Oracle Preparer (Filled in by System)	Date	Request Originator: D. PUSHKA	Extension: 8767 MS: 219
Division/Section Approval: D. PUSHKA		Date	NEPA Approval	
Business Office Approval		Date		
Directorate Approval		Date		

Requisition Header

Description (of entire requisition)
Note to Approver
Justification (To Approver)

Requisition Entry Defaults

Requester	Deliver-To-Location (not Mail Station)	Buyer Note (use attachments) (i.e., Previous PO)
DAVE PUSHKA	~~NEL MUON~~ MAB LAB	SIMILAR TO MAT'L ON 538014

Suggested Vendor	Suggested Vendor Site	Suggested Vendor Contact	Suggested Vendor Telephone #
CASTOR CORP	3400 N. KEDZIE AVE CHICAGO, IL		

Reference #	Need-By-Date	Project/Task/Expenditure Type and Expenditure Organization
	5-1-04	200/1.1.4.3.2

Note to Receiver	Total of Requisition
	$2000.00

Requisition Lines

Line #	Line Type	PO Line Category	Description (Start with a Noun) (240 Characters Maximum, Enter Additional Description in Cell Below Line Item)	Quantity, Unit of Measure and Price		Project Information		Split Coding Qty's
1	GR	MECH	DUAL WHEEL RIGID CASTER 16 INCH DIAMETER * 5 INCH WIDE POLYURETHANE/IRON CORE. RIGID CASTER WITH FACE CONTACT WHEEL BRAKE	Quantity	2	Project		
				Unit of Measure	EACH	Task		
				Price per Unit	1000.00	Exp. Type		
			UN Number / Hazard Class	Extended Price	2000.00	Exp. Org.		
2			P/N 850 PY 16809-FCB-R	Quantity		Project		
				Unit of Measure		Task		
				Price per Unit		Exp. Type		
			UN Number / Hazard Class	Extended Price		Exp. Org.		
3				Quantity		Project		
				Unit of Measure		Task		
				Price per Unit		Exp. Type		
			UN Number / Hazard Class	Extended Price		Exp. Org.		

F.N.A.L. STK. NO. 1335-0200 FL-29 REV 4/2003

UNIVERSITIES RESEARCH ASSOCIATION INC.
FERMI NATIONAL ACCELERATOR LABORATORY
P.O. BOX 500 BATAVIA, ILLINOIS 60510
AREA CODE 630 840-3000

PURCHASE ORDER
NO. 538014

IMPORTANT
PLEASE PUT THE ORDER NUMBER ON ALL INVOICES, SHIPPING NOTICES, CORRESPONDENCE AND THE EXTERIOR OF ALL SHIPPING CONTAINERS.

CASTER CORP
3400 N KEDZIE AVE
CHICAGO, IL 60618-0449
United States

SHIP TO
FERMILAB
RECEIVING WAREHOUSE 2
KIRK RD & WILSON STREET
BATAVIA, IL 60510
United States

BILL TO
FERMILAB
ACCOUNTS PAYABLE
PO BOX 500
BATAVIA, IL 60510
United States

ORDER DATE	BUYER	TERMS: FROM RECEIPT OF GOODS OR INVOICE, WHICHEVER IS LATER	F.O.B.	SHIP VIA:	REQUESTOR
08-MAY-01	R JOHNSON	NET 30	Shipping Point	TRUCK	FANG, INGRID

ITEM	DESCRIPTION	DUE DATE	QUANTITY	UOM	UNIT PRICE	EXTENDED PRICE
1	**ALBION 850 SERIES DUAL WHEEL CASTER 16 INCH** DIAMETER X 5 INCH WIDTH POLYURETHANE/IRON CORE, SWIVEL CASTER, SWIVEL LOCK WITH FACE CONTACT WHEEL BRAKE, 850PY16801S-SL-FCB	01-JUN-01	6	EACH	1,057.00	$6,342.00
					TOTAL	$6,342.00

CONFIRMED: JAMES HART 5-08-01

THE FOLLOWING TERMS AND CONDITIONS ARE A PART OF THIS PURCHASE ORDER:
FL-5 PURCHASE ORDER TERMS & CONDITIONS, REV. 4/98.
(AVAILABLE UPON REQUEST)

THIS PURCHASE IS EXEMPT FROM ILLINOIS RETAILERS OCCUPATION TAX UNDER TAX IDENTIFICATION NUMBER E9986-4967-03.

VENDOR INSTRUCTIONS
MATERIALS, SUPPLIES, OR SERVICES COVERED BY THIS ORDER ARE FOR WORK DONE UNDER PRIME CONTRACT DE-AC02-76CH03000 WITH THE UNITED STATES DEPARTMENT OF ENERGY (DOE) AND TITLE TO SUCH MATERIAL, SUPPLIES AND SERVICES SHALL PASS DIRECTLY FROM SELLER TO THE U.S GOVERNMENT. TERMS AND CONDITIONS REFERENCED ABOVE SHOULD CONSTITUTE PART OF THIS ORDER.

Rev: Apr 12, 1997

AUTHORIZED BY R. Johnson
R JOHNSON
UNIVERSITIES RESEARCH ASSN., INC.
FERMI NATIONAL ACCELERATOR LABORATO
(FERMILAB)

CASTER

C O R P O R A T I O N

3400 North Kedzie . P.O. Box 18449 . Chicago, IL 60618-0449

773-866-2600 800-777-1684 FAX 773-866-2601

TO: FERMILAB (NAL)

QUOTATION NO. 032101JH1

DATE 3/21/01

ATTENTION: INGRID (630-840-3867)

We thank you for your TELEPHONE Inquiry dated 3/20/01 and are pleased to quote prices and delivery, subject to conditions printed hereon, as follows

Our Part Number	Description	Quantity	List Price Net price Each	Estimated Weight Each
850PY16801S-SL-FCB	DUAL WHEEL SWIVEL CASTER, 16" X 5" ALATHANE WHEELS, FIELD INSTALLABLE SWIVEL LOCK, FACE CONTACT WHEEL BRAKE	6	$1,057.00	
LIST PRICE SUBJECT TO		% DISCOUNT		

F.O.B ALBION, MICHIGAN Terms: NET 30 DAYS

SHIPMENT: We estimate that we can ship within TWO-THREE weeks after entry of your order. If shipment is urgently required, we will make every effort to meet your schedule.

Prices quoted will remain in effect for 30 days from date hereof.
Prices do not include Federal, State, or Local taxes.
Cancellation of orders will not be agreed to except upon terms that will indemnify us against loss.

CASTER
CORPORATION
By: JAMES HART

FERMILAB ENGINEERING NOTE	SECTION PPD/ETT	PROJECT NuMI	SERIAL - CATAGORY	PAGE 1
SUBJECT: Winch Cable Force for Carrier & Pre-Target Tunnels			NAME: Mayling Wong	
			DATE: 5 January 2003	REVISION DATE: 9 Apr 2003

Given: The NuMI B2 magnet transport cart will be pulled up a slope 15% by a winch through the pre-target tunnel. The cart (including the spreader) weighs 3300 pounds, and the B2 magnet weighs 25,900 pounds. The breakaway coefficient of friction is no more than 5%.

Find: The force that the winch must pull.

Solution:

$B2wgt := 25900$ lb Weight of B2 magnet

$cartwgt := 3300$ lb Weight of magnet cart

$slope := 0.15$ Slope of tunnel floor

$angle := atan(slope)$

$angle = 0.149$ rad Angle of tunnel floor

$angled := \frac{360}{2 \cdot \pi} \cdot angle$

$angled = 8.531$ deg Angle of tunnel floor

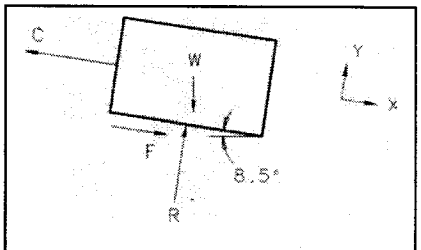

Figure 1

As seen in Figure 1, the forces acting on the cart are the pull of the winch cable, the resultant force of the floor on the cart, the friction force, and the weight of the cart. Assuming that the cart is in equilibrium, the forces can be summed up:

-C+Wx+F = 0
R-Wy = 0

The floor's resultant force can be calculated:

$Wy := (B2wgt + cartwgt) \cdot cos(angle)$

$Wy = 2.888 \times 10^4$ lb Y-component of the weight

$R := Wy$

$R = 2.888 \times 10^4$ lb Resultant force of the floor on the cart

When the winch begins to pull on the cart, it is assumed that the cart will not move immediately because the winch pull force has to overcome static friction. It is also assumed that the kinetic friction of the rollers on the cart is less than the the static friction. The maximum force due to static friction is calculated:

$mu := 0.05$ Static coefficient of friction

$F := mu \cdot R$

$F = 1.444 \times 10^3$ lb Friction force

Assuming the maximum force that the winch cable sees occurs when the winch is starting to pull on the cart (before the cart begins to move), the cable force is:

$Wx := (B2wgt + cartwgt) \cdot sin(angle)$

$Wx = 4.332 \times 10^3$ lb X-component of the weight

$C := Wx + F$

$C = 5.775 \times 10^3$ lb Force in the winch cable

The total length of 9/16-inch diameter wire rope specified for the winch is 615 feet (distance from STA 2+40 [upstream of CMU wall in Carrier Tunnel] to STA 6+40 [NuMI tunnel shaft] is 400 feet; the winch sits at about STA 4+50 [beginning of Pre-Target Tunnel], so additional 210 feet of cable is needed; extra 5 feet of rope added).

The Thern winch model number 4HS11M-11000-15 has the following specifications:
- Load rating 11,000 lb 1st layer, 7600 lb mid drum, 5800 lb full drum
- Motor 5 hp, 460V, 3-phase, TEFC severe brakemotor
- Line speed: 15 ft/minute 1st layer, 28 ft/minute full drum
- Helical/Spur gear drive
- Drum spool diameter 9-inch, drum flange diameter 20-inch, drum width 18-inch
- Using 9/16-inch wire rope, layer 7 has a line pull of 6100 lb.(drum capacity 9 layers)

Winch dimensions can be found on Thern's online catalog:
http://www.thern.com/product/section3/4hs11mdim.htm

Bridon wire rope that has a 9/16-inch diameter (part number 6x19IWRC) has a minimum breaking force of 16.8 tons.

Crosby Eye Hoist Hook, 7/8-inch size (part number S-320AN), has a working load limit of 34,200 lb.

NUMI ABS INST. PLAN B 4-29-04 DAVE PUSHKAR

LOAD UP THE INCLINE:

20,000 # (10 TON) BLUE BLOCK +
ASSUME 2000 # CART

TOTAL LOAD = 22,000 # (11 TONS)

SLOPE = (10.7%) → USE 11%

$\measuredangle$ = ~~6.1125°~~ 6.27° @ 11%

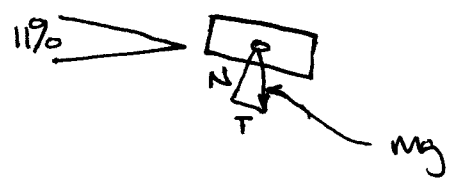

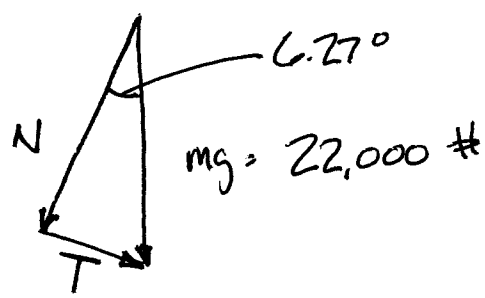

T = (22,000) SIN (6.27°) = 2405 #

WINCH CAPABILITY = 11,000 # 1ST WRAP ON DRUM
5800 # LAST " " "

CABLE = 18.5 TONS (37,000 #) BREAKING STRENGTH

∴ WORKING STRENGTH = 7,400 # WITH S.F. = 5

LOAD < WINCH OR ROPE CAPACITY ∴ OK

FNAL Purchase Order Inquiry

Fermilab Business Services

UNIVERSITIES RESEARCH ASSOCIATION INC.
FERMI NATIONAL ACCELERATOR LABORATORY
P.O. BOX 500 BATAVIA, ILLINOIS 60510
AREA CODE 630 840-3000

STANDARD PURCHASE ORDER NO. 556781
Status: APPROVED Reprints 0

JOHN SAKASH COMPANY
700 WALNUT STREET
ELMHURST, IL 60126

SHIP TO FERMILAB
RECEIVING WAREHOUSE 2
KIRK RD & WILSON STREET
BATAVIA, IL 60510 US

BILL TO FERMILAB
ACCOUNTS PAYABLE
PO BOX 500
BATAVIA, IL 60510 US

ORDER DATE	BUYER	TERMS:	F.O.B.	SHIP VIA:
12-Apr-2004	RJOHNSON	FROM RECEIPT OF GOODS OR INVOICE, WHICHEVER IS LATER	Destination	VENDORS CHOICE

Line	Item Description	Qty	U/M	Unit Price	Ext. Price	Work Pkg-CE	Req Number(s)
1	**ROPE, WIRE 6 X 19 IWRC, 9/16 INCH DIAMETER, STEEL CORE, EEIP GRADE REGULAR LAY** **Promised Date: 24-May-2004** **Deliver To: PUSHKA, DAVID R.**	800.00	FEET	1.30	1,040.00	00000-41	171304

Project NuMITEC **Task** INST CC&SS Install'n **Task Number** 1.1.8.3.3
Exp. Org AD - NUMI **Exp. Type** MATERIAL PURCHASES
Task Org AD - NUMI **Service Type** PL-LI-NUMI

PO Total: 1,040.00

Approval History

DATE	ACTION	WHO	NOTE
12-Apr-2004	APPROVE	JOHNSON	
12-Apr-2004	SUBMIT	JOHNSON	
12-Apr-2004	RESERVE	JOHNSON	
12-Apr-2004	SUBMIT	JOHNSON	

Shipment History

DATE	DESCRIPTION	QUANTITY	LINE	ITEM DESCRIPTION
20-Apr-2004	RECEIVE	800.0	1	ROPE, WIRE 6 X 19 IWRC, 9/16 INCH DIAMETER, ST
20-Apr-2004	DELIVER	800.0	1	ROPE, WIRE 6 X 19 IWRC, 9/16 INCH DIAMETER, ST

Invoice History

DATE	NUMBER	WKP CE	PAID DATE	AMOUNT	HOLD?	HOLD REASON
21-Apr-2004	128936	00000-41		1,040.00	NO	
				1,040.00		

Project NuMITEC **Task** INST CC&SS Install'n **Task Number** 1.1.8.3.3
Exp. Org AD - NUMI **Exp. Type** MATERIAL PURCHASES
Task Org AD - NUMI **Service Type** PL-LI-NUMI

Invoice Total **1,040.00**

Enter Another Query

FNAL Purchase Order Inquiry

Fermilab Business Services

UNIVERSITIES RESEARCH ASSOCIATION INC.
FERMI NATIONAL ACCELERATOR LABORATORY
P.O. BOX 500 BATAVIA, ILLINOIS 60510
AREA CODE 630 840-3000

STANDARD PURCHASE ORDER NO. 557015
Status: APPROVED Reprints 1

CASTER CORP
3400 N KEDZIE AVE
CHICAGO, IL 60618-0449

SHIP TO FERMILAB
RECEIVING WAREHOUSE 2
KIRK RD & WILSON STREET
BATAVIA, IL 60510 US

BILL TO FERMILAB
ACCOUNTS PAYABLE
PO BOX 500
BATAVIA, IL 60510 US

ORDER DATE	BUYER	TERMS:	F.O.B.	SHIP VIA:
23-Apr-2004	GGOLINSKI	FROM RECEIPT OF GOODS OR INVOICE, WHICHEVER IS LATER	Shipping Point	UPS

Line	Item Description	Qty	U/M	Unit Price	Ext. Price	Work Pkg-CE	Req Number(s)
1	**DUAL WHEEL RIGID CASTER 16 IN DIAMETER 5 INCH WIDE PLOYURETHANE/IRON CORE RIGID CASTER WITH FACE CONTACT WHEEL BRAKE P/N 850PY16809R-FCB** **Promised Date: 01-May-2004** **Deliver To: PUSHKA, DAVID R.**	1,438.95	EACH	2.00	2,877.90	00000-41	171519

Project NuMITEC **Task** HDA Installation **Task Number** 1.1.4.3.2.4
Exp. Org AD - NUMI **Exp. Type** MATERIAL PURCHASES
Task Org AD - NUMI **Service Type** PL-LI-NUMI

PO Total: 2,877.90

Approval History

DATE	ACTION	WHO	NOTE
23-Apr-2004	APPROVE	GOLINSKI	
23-Apr-2004	SUBMIT	GOLINSKI	
23-Apr-2004	RESERVE	GOLINSKI	
23-Apr-2004	SUBMIT	GOLINSKI	

Shipment History

DATE	DESCRIPTION	QUANTITY	LINE	ITEM DESCRIPTION

Invoice History

DATE	NUMBER	WKP CE	PAID DATE	AMOUNT	HOLD?	HOLD REASON

DATE	NUMBER	WKP	CE	PAID DATE	AMOUNT	HOLD?	HOLD REASON

ject Task Task Number
Exp. Org Exp. Type
Task Org Service Type

Invoice Total

Enter Another Query

FNAL Purchase Order Inquiry — Fermilab Business Services

UNIVERSITIES RESEARCH ASSOCIATION INC.
FERMI NATIONAL ACCELERATOR LABORATORY
P.O. BOX 500 BATAVIA, ILLINOIS 60510
AREA CODE 630 840-3000

STANDARD PURCHASE ORDER NO. 550581
Status: APPROVED Reprints 1

ALLOY SLING CHAIN IND INC
1416 W 175TH ST
EAST HAZELCREST, IL 60429

SHIP TO FERMILAB
RECEIVING WAREHOUSE 2
KIRK RD & WILSON STREET
BATAVIA, IL 60510 US

BILL TO FERMILAB
ACCOUNTS PAYABLE
PO BOX 500
BATAVIA, IL 60510 US

ORDER DATE	BUYER	TERMS:	F.O.B.	SHIP VIA:
01-Apr-2003	RJOHNSON	FROM RECEIPT OF GOODS OR INVOICE, WHICHEVER IS LATER	Shipping Point	UPS

Line	Item Description	Qty	U/M	Unit Price	Ext. Price	Work Pkg-CE	Req Number(s)
1	**WINCH, THERN PART NUMBER 4HS11M (REF THERN PROP # 03 63 33526D3-LOAD RATING 10,000 LB, 5 HP 460 VOLT, 3 PHASE TEFC BRAKEMOTOR)** **Promised Date: 29-Apr-2003** **Deliver To: WONG, MAYLING L**	1.00	EACH	8,850.00	8,850.00	5YHD-41	162706
	Project NuMITEC **Task** INST CC&SS Const **Task Number** 1.1.8.3.2 **Exp. Org** AD - NUMI **Exp. Type** MATERIAL PURCHASES **Task Org** AD - NUMI **Service Type** PL-LI-NUMI						
2	**MOTOR CONTROL, THERN PART # EL4021 (REF THERN PROP # 03 63 33526D3)** **Promised Date: 29-Apr-2003** **Deliver To: WONG, MAYLING L**	1.00	EACH	830.00	830.00	5YHD-41	162706
	Project NuMITEC **Task** INST CC&SS Const **Task Number** 1.1.8.3.2 **Exp. Org** AD - NUMI **Exp. Type** MATERIAL PURCHASES **Task Org** AD - NUMI **Service Type** PL-LI-NUMI						
3	**WIRE ROPE AND EYQ HOIST ASSEMBLY, BRIDON WIRE ROPE PART NUMBER 6X191WRC (9/16 - IN DIAMETER) 615 FEET; BROSBY EYE HOIST HOOK S-320AN HA (3/8 IN)** **Promised Date: 29-Apr-2003** **Deliver To: WONG, MAYLING L**	1.00	EACH	840.77	840.77	5YHD-41	162706
	Project NuMITEC **Task** INST CC&SS Const **Task Number** 1.1.8.3.2 **Exp. Org** AD - NUMI **Exp. Type** MATERIAL PURCHASES **Task Org** AD - NUMI **Service Type** PL-LI-NUMI						

PO Total: 10,520.77

Approval History

DATE	ACTION	WHO	NOTE
01-Apr-2003	APPROVE	JOHNSON	
01-Apr-2003	SUBMIT	JOHNSON	
01-Apr-2003	RESERVE	JOHNSON	
-Apr-2003	SUBMIT	JOHNSON	

Shipment History

DATE	DESCRIPTION	QUANTITY	LINE	ITEM DESCRIPTION
23-Apr-2003	RECEIVE	1.0	1	WINCH, THERN PART NUMBER 4HS11M (REF THE
23-Apr-2003	DELIVER	1.0	1	WINCH, THERN PART NUMBER 4HS11M (REF THE
23-Apr-2003	RECEIVE	1.0	2	MOTOR CONTROL, THERN PART # EL4021 (REF TH
23-Apr-2003	DELIVER	1.0	2	MOTOR CONTROL, THERN PART # EL4021 (REF TH
28-Apr-2003	RECEIVE	1.0	3	WIRE ROPE AND EYQ HOIST ASSEMBLY, BRIDON W
28-Apr-2003	DELIVER	1.0	3	WIRE ROPE AND EYQ HOIST ASSEMBLY, BRIDON W

Invoice History

DATE	NUMBER	WKP CE	PAID DATE	AMOUNT	HOLD?	HOLD REASON
28-Apr-2003	446044	00000-50	27-May-2003	73.12	NO	
				73.12		

Project NuMITEC **Task** INST CC&SS Const **Task Number** 1.1.8.3.2
Exp. Org AD - NUMI **Exp. Type** FREIGHT
Task Org AD - NUMI **Service Type** PL-LI-NUMI

DATE	NUMBER	WKP CE	PAID DATE	AMOUNT	HOLD?	HOLD REASON
28-Apr-2003	446044	5YHD-41	27-May-2003	830.00	NO	
28-Apr-2003	446044	5YHD-41	27-May-2003	840.77	NO	
28-Apr-2003	446044	5YHD-41	27-May-2003	8,850.00	NO	
				10,520.77		

Project NuMITEC **Task** INST CC&SS Const **Task Number** 1.1.8.3.2
Exp. Org AD - NUMI **Exp. Type** MATERIAL PURCHASES
Task Org AD - NUMI **Service Type** PL-LI-NUMI

Invoice Total **10,593.89**

Enter Another Query