FERMILAB ENGINEERING NOTE	SECTION PPD/MD	PROJECT NuMI	NUMBER MD-ENG-028	PAGE 1
SUBJECT: NuMI Pre-Target Tunnel – Magnet Stands			NAME: Mayling Wong	
			DATE: 22 Mar 2004	REVISION DATE

Number: MD-ENG-028

Reviewer(s): Ang Lee ALee 3/26/2004

Key Words: NuMI, Carrier Tunnel, Pre-Target Tunnel, Trim Magnets, Magnet Stands, Adjuster, Base

Abstract/Summary:
In the NuMI Carrier Tunnel and Pre-Target Tunnel, there are nine (9) trim magnets (corrector magnets). The magnets rest on stand assemblies that are made up of two basic components: the adjuster and the base. The magnet stand drawings are listed in the bill of materials for the NuMI Pre-Target Tunnel Installation drawing (PPD/Mechanical Department 8875.119-ME-427811). This engineering note details the calculations of the allowable stresses and loads according to the AISC's Allowable Stress Design (ASD) and expected deflections.

Applicable Codes and References:

Manual of Steel Construction – Allowable Stress Design (ASD), American Institute of Steel Construction, Ninth Edition, 1989.

Hilti North America Product Technical Guide, Hilti Inc., 2002 Edition.

Avallone, E.A., et al, Mark's Standard Handbook for Mechanical Engineers, Tenth Edition, McGraw-Hill, 1996.

Rothbart, H.A., Mechanical Design Handbook, McGraw-Hill, 1996.

Shigley, J.E. and C.R. Mischke, Mechanical Engineering Design, Fifth Edition, McGraw-Hill, 1989.

Table of Contents

1.0 Introduction

2.0 Trim Magnet Stand
2.1 Bolts Holding Magnet to Adjuster
2.2 Adjuster Assembly
2.2.1 Bending of the Support Plate
2.2.2 Vertical Threaded Rod - Analysis of Threads
2.2.3 Vertical Threaded Rod Compressive Buckling Load
2.2.4 Spherical Nut Thread Strength
2.2.5 Torque on Horizontal Adjusting Screw
2.2.6 Bending of Adjuster Plate/Base Weldment Top Plate
2.3 Base Assembly
2.3.1 Bending load on the legs
2.3.2 Shear load on anchor bolts
2.3.3 Torque requirement and thread strength of leveling bolts

Tables:
1. Coordinates and Pitches of the Trim Magnets in NuMI Pre-Target Tunnel
2. Names and Part Numbers of the Trim Magnet Stands in NuMI Pre-Target Tunnel

Figures:
1. Water Cooled Trim Dipole Magnet (IDHK) (Drawing 5520-ME-388591)
2. Water Cooled Horizontal Trim Dipole Magnet (IDHKR) (Drawing 5520-ME-388592)
3. Water Cooled Wide Gap Trim Dipole Magnet (IDHKW) (Drawing 5520-ME-388593)
4. Water Cooled Rolled Wide Gap Horizontal Trim Dipole Magnet (Drawing 5520-ME-388594)
5. Typical Trim Magnet Stand (Drawing 8875.119-MD-431698)
6. Typical Adjuster Assembly (Drawing 8875.119-MD-431674)
7. Drawing of Support Plate Assembly (Drawing 8875.119-MD-431631)
8. Model of Adjuster Support Plate
9. FEA Results of Stress
10. FEA Results of Displacement
11. Typical Base Weldment (Drawing 8875.119-MD-431660)
12. Legs of Base Weldment (Drawing 8875.119-MD-431659)

1 Introduction

This engineering note details the calculations of the mechanical stresses and loads on the magnet stands in the NuMI Carrier and Pre-Target Tunnels, between STA 2+50 and STA 6+50 for the trim magnets. There are nine (9) trim magnets. Table 1 lists the trim magnet's coordinates (which are corrected for the earth's curvature, according to the file NuMI_11Dec02_b_beam_LTCS_Z2H.xls) and pitch (from file numi_121102_b_ces0.xls).

Table 1 – Coordinates and Pitches of the Trim Magnets in NuMI Pre-Target Tunnel

Magnet Name	Earth Curvature Corrected coordinates x (ft)	y (ft)	H (ft)	Pitch (deg)
VT113 (MIH-OR)	100677.98	97595.560	665.37921	8.95017
HT114 (MIHC-O)	100676.32	97596.435	665.08341	8.95017
HT115 (MIHC)	100614.96	97628.776	654.16027	8.95017
VT116 (MIHC-R)	100585.32	97644.402	648.88259	8.95017
HT117 (MIHC)	100515.06	97681.433	636.37501	8.95017
VT118 (MIHC-R)	100496.62	97691.16	633.09171	8.95017
HT119 (MIHC)	100441.57	97720.205	624.36407	6.14669
HT121 (MIHC)	100376.67	97754.449	618.63157	3.34321
VT121 (MIHC-R)	100375.09	97755.283	618.52708	3.34321

Each magnet is supported by two stands. Each stand is made up of the adjuster and the base. The base is unique to each magnet due to its pitch and distance above the tunnel floor. The base design is similar to those in the stands for the larger magnets in the Carrier and Pre-Target tunnels (Engineering Note MD-ENG-017).

Table 2 lists the names and part numbers of each stand assembly. A complete bill of materials is available on the Installation Assembly (ME-427811).

Table 2 – Names and Part Numbers of Magnet Stands in NuMI Pre-Target Tunnel

Magnet Name	Stand Assembly Name	Stand Assembly Number
VT113	VT113 – HT114 STAND ASSY	MD-431705
HT114	VT113 – HT114 STAND ASSY	MD-431700
HT115	HT115 – VT116 STAND ASSY	MD-431704
VT116	HT115 – VT116 STAND ASSY	MD-431704
HT117	HT117 STAND ASSY	MD-431699
VT118	VT118 STAND ASSY	MD-431706
HT119	HT119 STAND ASSY	MD-431671
HT121	HT121 – VT121 STAND ASSY	MD-431702
VT121	HT121 – VT121 STAND ASSY	MD-431698

The trim magnet weighs W = 450 pounds.

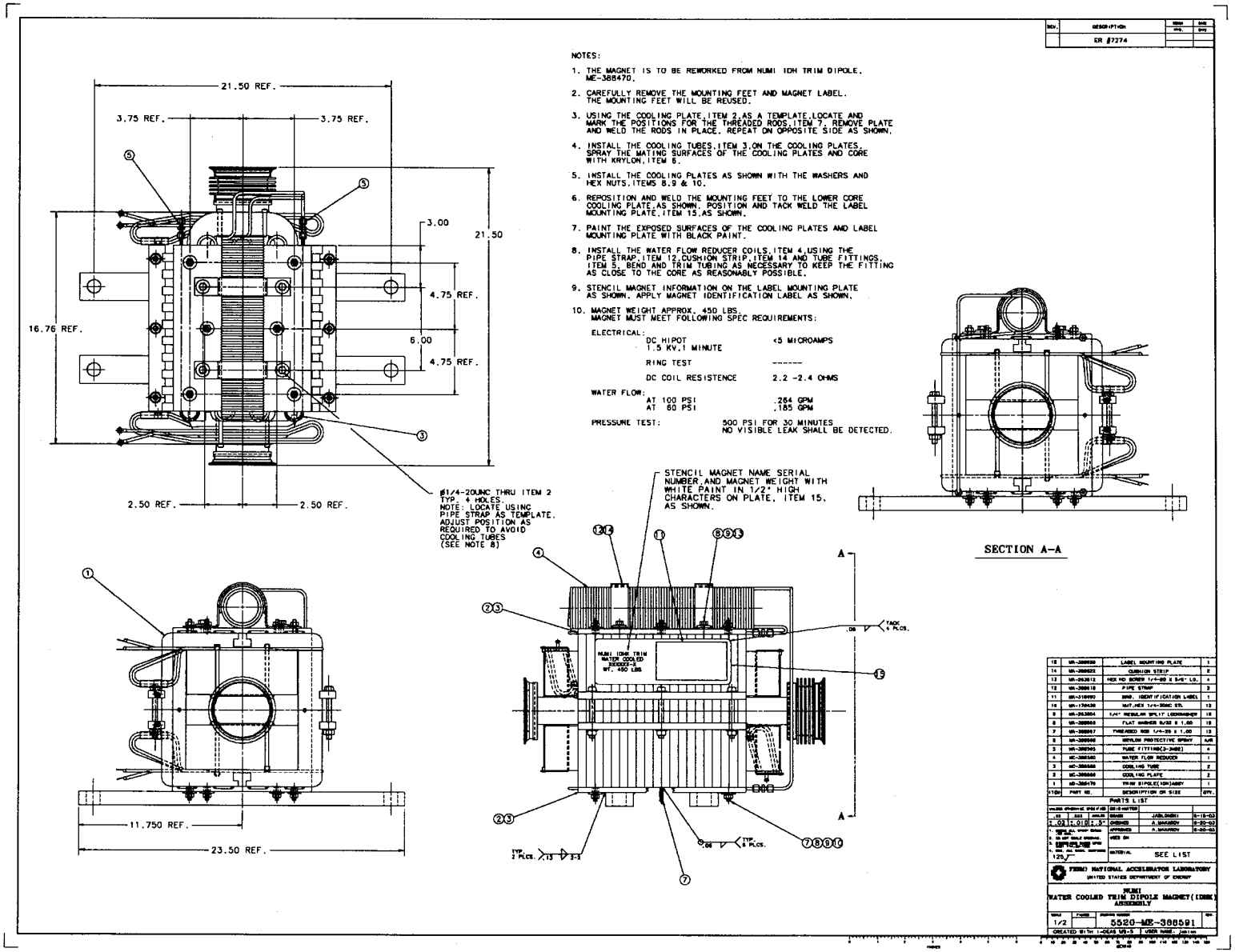

Figure 1 - Water Cooled Trim Dipole Magnet (IDHK) (Drawing 5520-ME-388591)

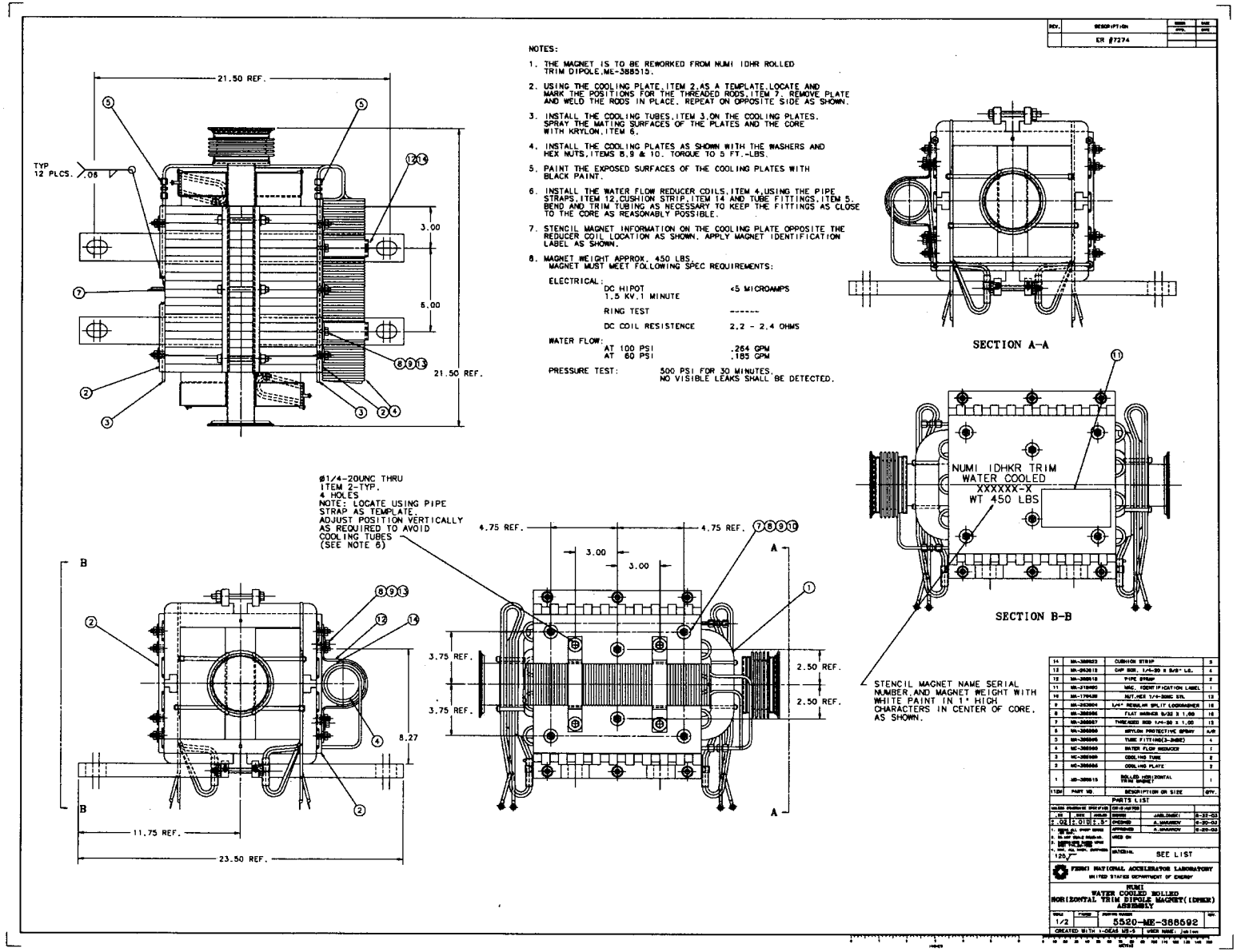

Figure 2 - Water Cooled Horizontal Trim Dipole Magnet (IDHKR) (Drawing 5520-ME-388592)

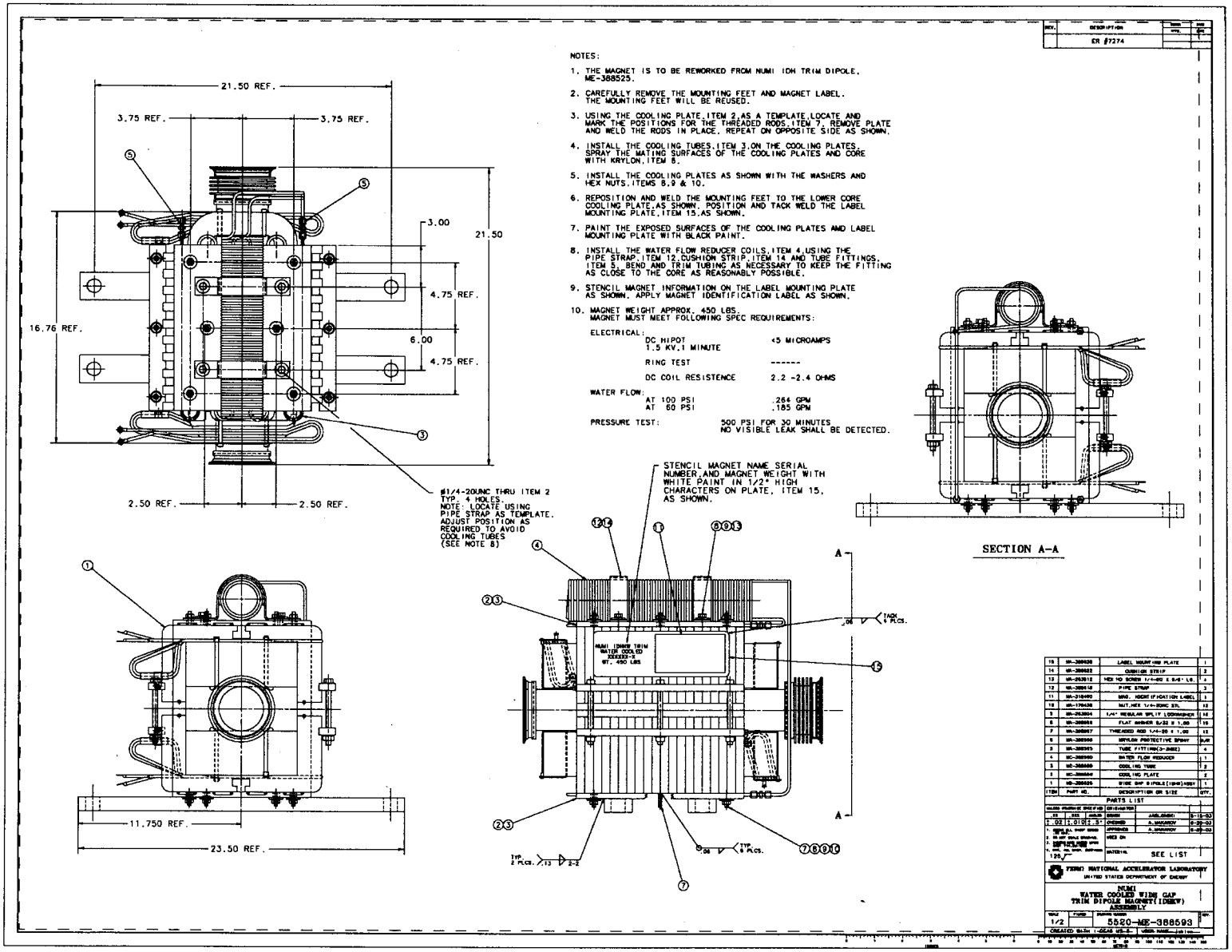

Figure 3 - Water Cooled Wide Gap Trim Dipole Magnet (IDHKW) (Drawing 5520-ME-388593)

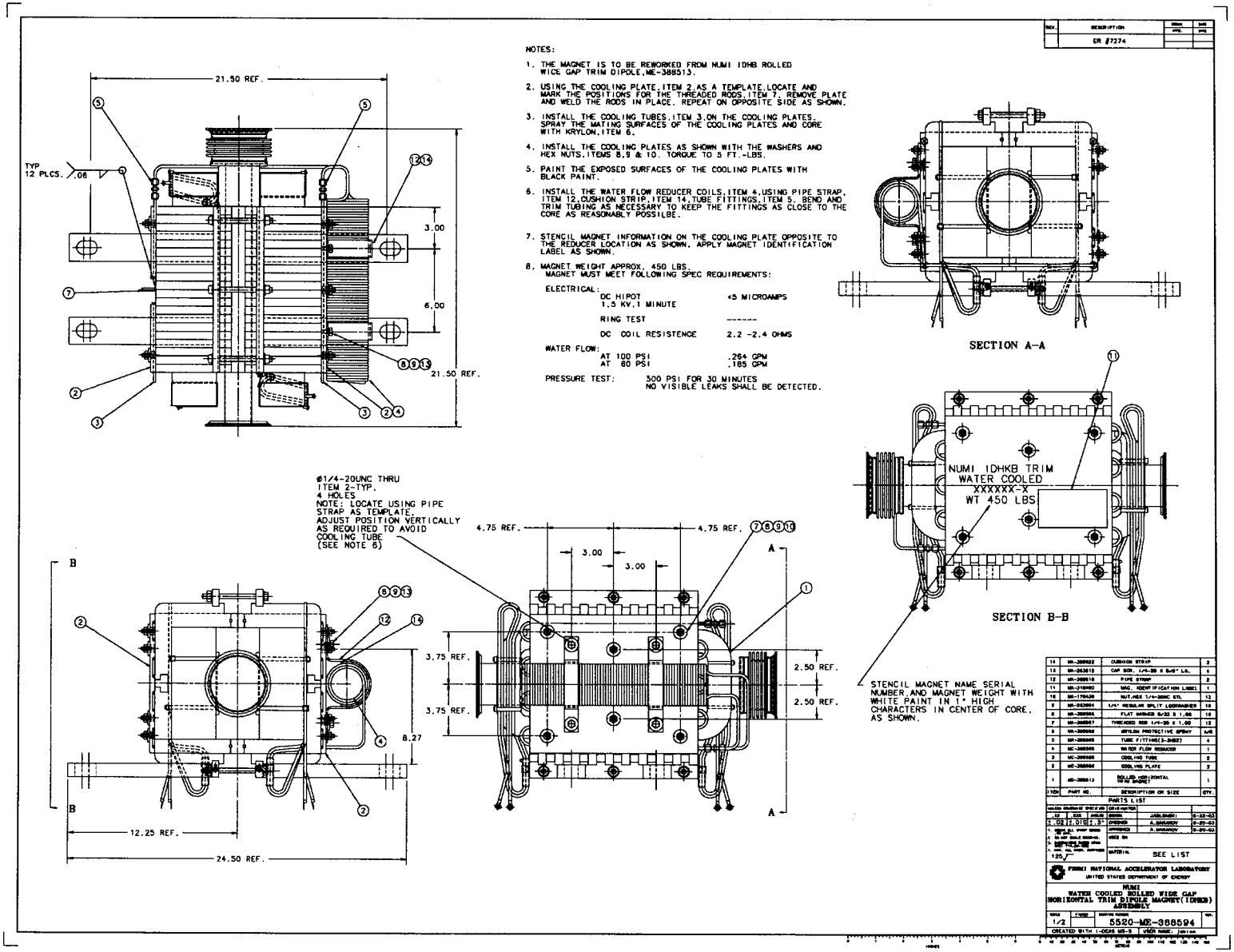

Figure 4 - Water Cooled Rolled Wide Gap Horizontal Trim Dipole Magnet (Drawing 5520-ME-388594)

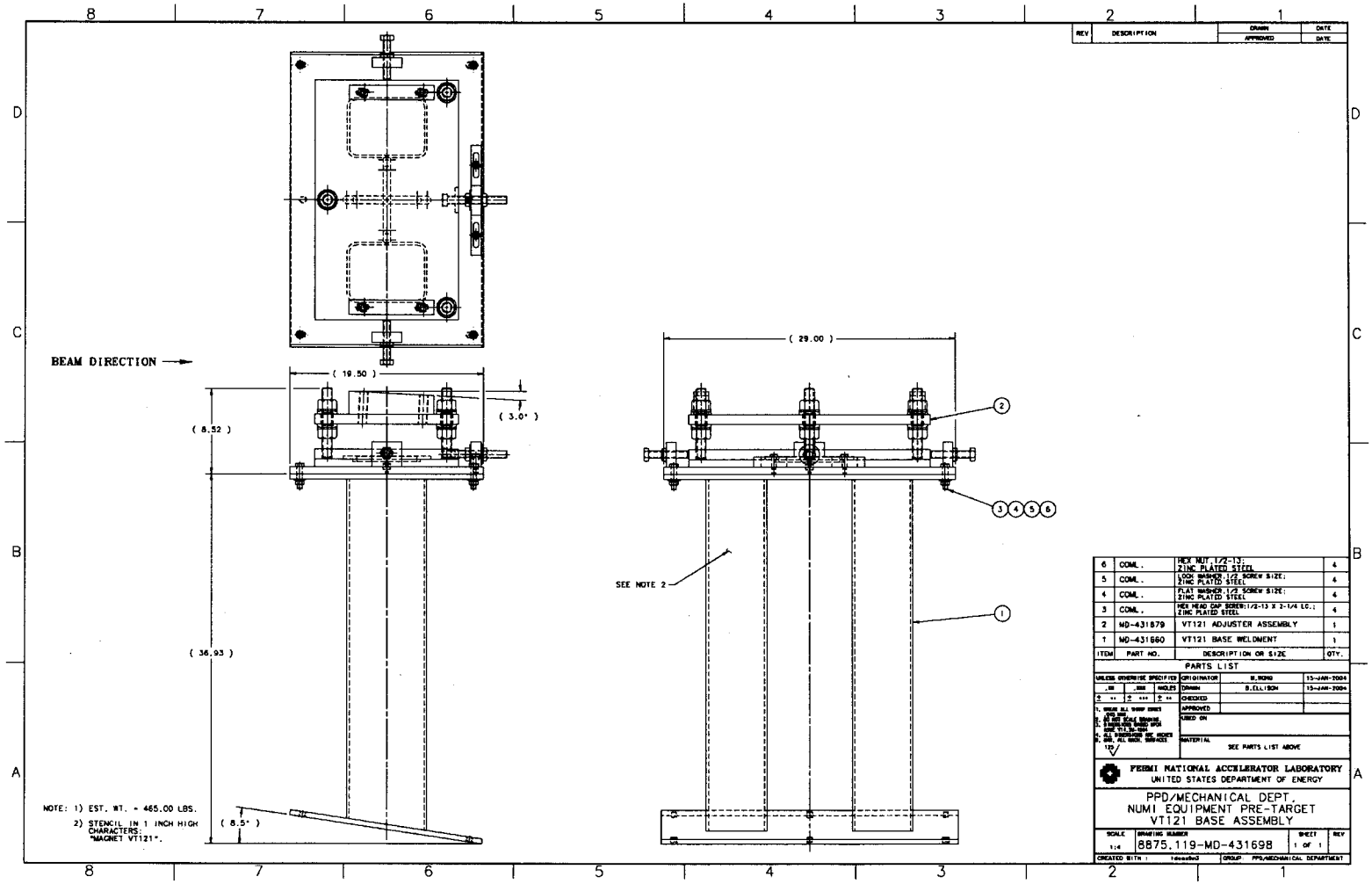

Figure 5 – Typical Trim Magnet Stand (Drawing 8875.119-MD-431698)

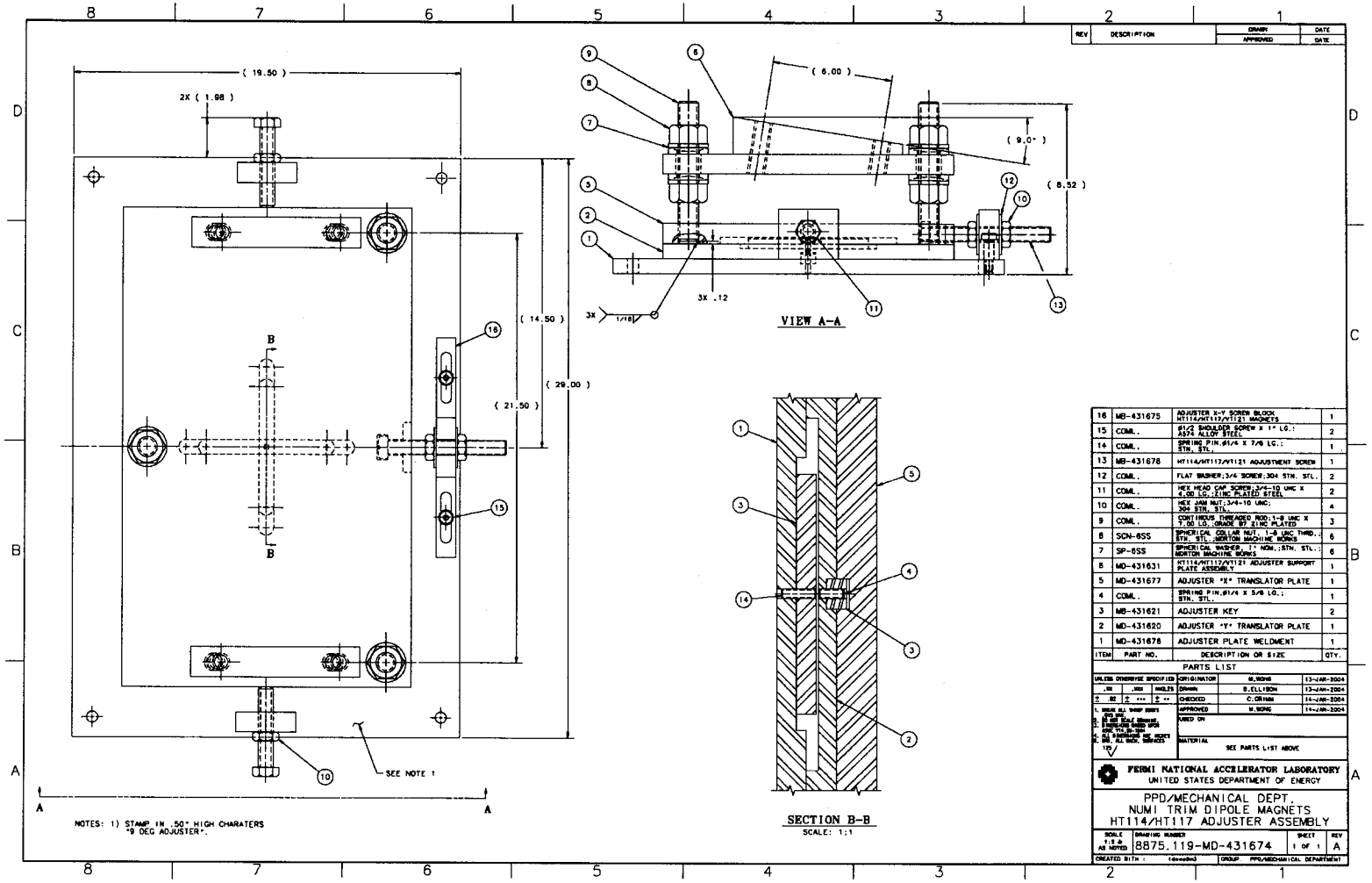

ITEM	PART NO.	DESCRIPTION OR SIZE	QTY.
16	MB-431675	ADJUSTER X-Y SCREW BLOCK HT114/HT117/VT121 MAGNETS	1
15	COML.	#1/2 SHOULDER SCREW X 1" LG.; A574 ALLOY STEEL	2
14	COML.	SPRING PIN;Ø1/4 X 7/8 LG.; STN. STL.	1
13	MB-431678	HT114/HT117/VT121 ADJUSTMENT SCREW	1
12	COML.	FLAT WASHER;3/4 SCREW;304 STN. STL.	2
11	COML.	HEX HEAD CAP SCREW;3/4-10 UNC X 4.00 LG.;ZINC PLATED STEEL	2
10	COML.	HEX JAM NUT;3/4-10 UNC; 304 STN. STL.	4
9	COML.	CONTINOUS THREADED ROD;1-8 UNC X 7.00 LG.;GRADE B7 ZINC PLATED	3
8	SCN-6SS	SPHERICAL COLLAR NUT, 1-8 UNC THRD.; STN. STL.;NORTON MACHINE WORKS	6
7	SP-6SS	SPHERICAL WASHER, 1" NOM.;STN. STL.; NORTON MACHINE WORKS	6
6	MD-431631	HT114/HT117/VT121 ADJUSTER SUPPORT PLATE ASSEMBLY	1
5	MD-431677	ADJUSTER "X" TRANSLATOR PLATE	1
4	COML.	SPRING PIN;Ø1/4 X 5/8 LG.; STN. STL.	1
3	MB-431621	ADJUSTER KEY	2
2	MD-431620	ADJUSTER "Y" TRANSLATOR PLATE	1
1	MD-431676	ADJUSTER PLATE WELDMENT	1

PARTS LIST

ORIGINATOR	M.WONG	13-JAN-2004
DRAWN	B.ELLISON	13-JAN-2004
CHECKED	C.GRIMM	14-JAN-2004
APPROVED	M.WONG	14-JAN-2004

USED ON

MATERIAL: SEE PARTS LIST ABOVE

SCALE: 1:2 AS NOTED | DRAWING NUMBER: 8875.119-MD-431674 | SHEET 1 OF 1 | REV A

CREATED WITH: | GROUP: PPD/MECHANICAL DEPARTMENT

Figure 6 - Typical Adjuster Assembly (Drawing 8875.119-MD-431674)

2 Trim Magnet Stand

Figures 1-4 show the drawings of the trim magnet stands that are used in the NuMI Carrier and Pre-Target Tunnels (drawings 5520-ME-388591 through –388594). Figure 5 shows a typical trim magnet stand (8875.119-MD-431698). The stands support the magnet when the magnet is angled relative to horizontal and when the floor is angled. For this note, the largest angle of 9° is used in the analysis.

2.1 Bolts Holding Magnet to Adjuster

Figure 5 shows the bolts holding the magnet to the adjuster. Four 7/8-9UNC bolts hold a trim magnet to its adjuster. Each bolt holding the magnet to the adjuster is loaded in shear (minor diameter 0.7387-inch). For the magnet oriented 9°, the total shear load is $W_h = W*\sin 9° = 70.4$ pounds. If the total shear load from the magnet is on one bolt, the bolt will experience:

$$\tau = W_h/A = (70.4)/(\pi*0.36935^2) = 164 \text{ psi}$$

The allowable shear (ASD Section F4) is $\tau_{allow} = 0.40*\sigma_{yield} = 0.40(36000) = 14{,}400$ psi. The bolt design falls well within the allowable shear.

2.2 Adjuster Assembly

Figure 6 shows the drawing of a typical adjuster assembly (drawing MD-431674). The adjusters hold the trim magnet at its specified angle, with the largest angle of 9°.

2.2.1 Bending of the support plate

The support plate under the magnet (Figure 7 - part MD-431624) is loaded by the weight of the magnet, $W_v = 450*\cos 9° = 444.5$ pounds. The longer distance between the centers of the support bolts is 21.5-inches. The plate is first analyzed assuming that the plate, 21.5 inches long and simply supported, is loaded in a point load at the center. The cross section of the plate that is loaded has dimensions 12-inches wide and 1-inch high.

The maximum bending moment in the plate with a point load at its center is:

$$M_{max} = \frac{W_v L}{4}$$

where Wv = 444.5 lb.
L = 21.5 in.

$M_{max} = 2389$ in-lb.

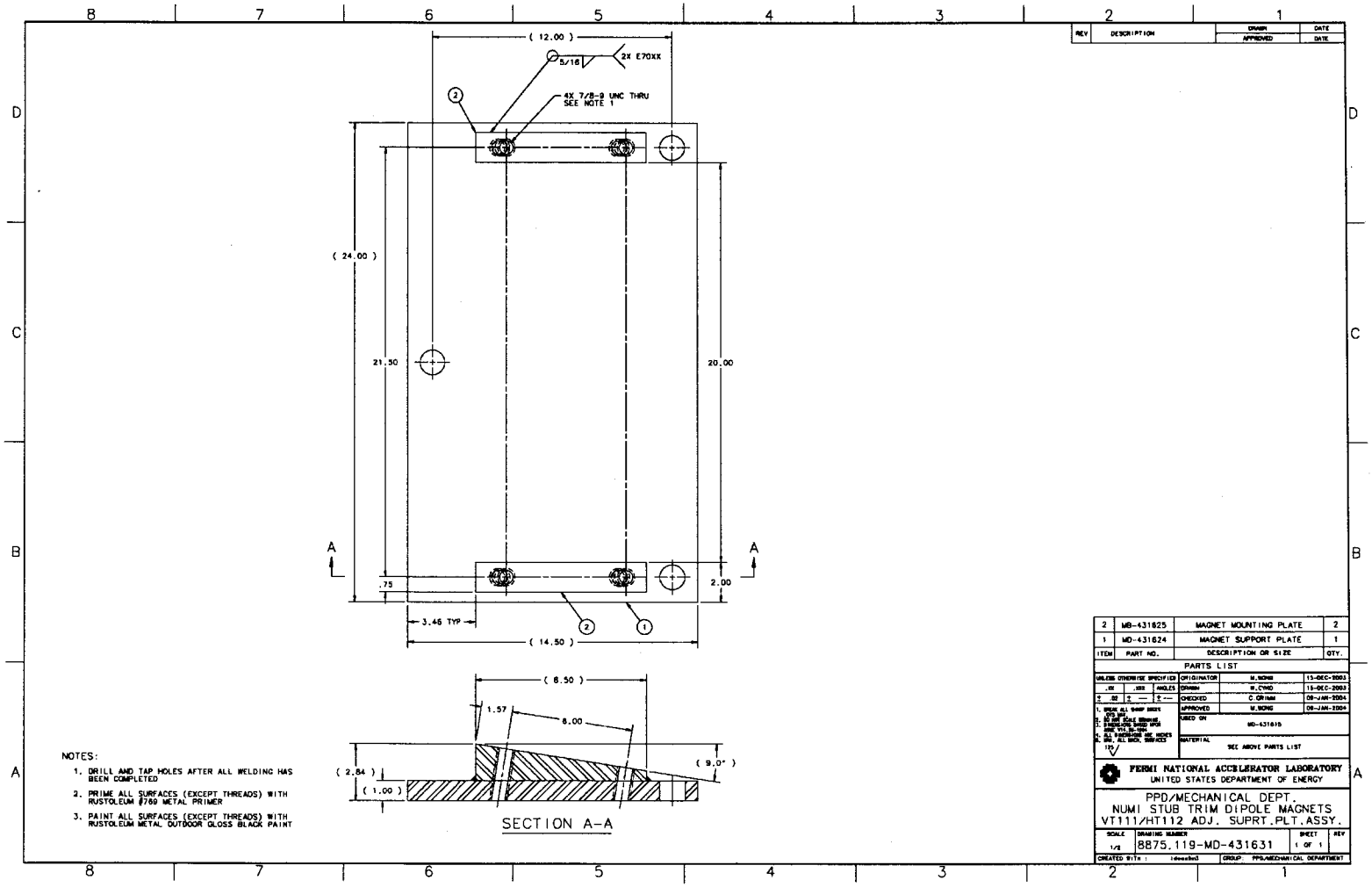

Figure 7 - Drawing of Support Plate Assembly (Drawing 8875.119-MD-431631)

The maximum bending stress in the plate is:

$$\sigma_{max} = \frac{M_{max} y}{I}$$

where $y = 0.5*1\text{-inch} = 0.5$ in.

$I = [12\text{-inch} * (1\text{-inch})^3] / 12 = 1.0 \text{ in}^4$

$\sigma_{max} = 1194$ psi.

The maximum displacement in the plate is:

$$y_{max} = \frac{-W_v L^3}{48EI}$$

where $E = 28{,}000$ ksi

$y_{max} = 0.003$ in.

A finite element analysis of the plate as it is really supported was done. A model of dimensions 21.5-inch by 12.0-inch with shell elements of 1.0-inch thick is supported as shown in Figure 8. The model is loaded along two edges with a force intensity of 26.1-lb/in along a distance of 8.5 inches on each edge.

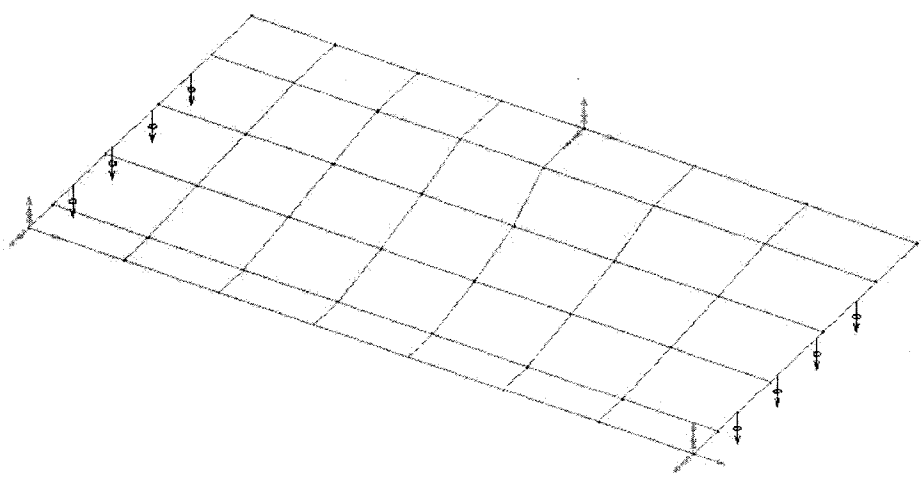

Figure 8 – Model of Adjuster Support Plate

The model results, displayed in Figures 9 and 10, are a maximum stress of 1030-psi and a maximum displacement of 0.002-inch.

According to the ASD Section F2.2, the allowable bending stress is is $\sigma_b = 0.60\sigma_y$. For carbon steel, $\sigma_y = 36{,}000$ psi. Thus, the allowable bending stress is $\sigma_b = 21{,}600$ psi. The maximum bending stress in the support plate is well within the allowable.

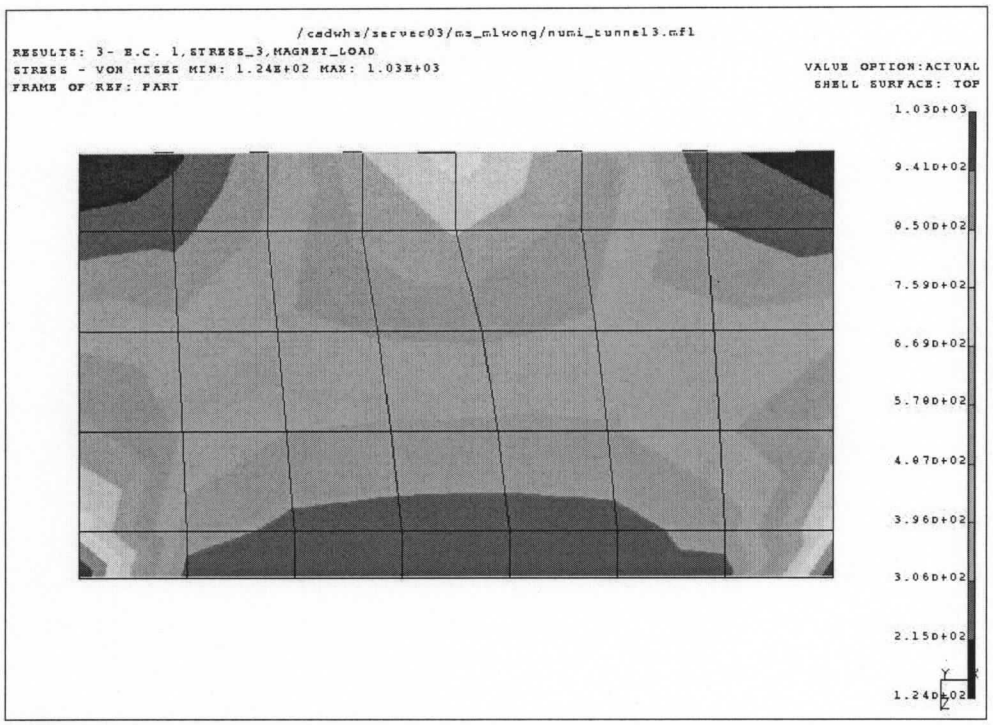

Figure 9 – FEA Results of Stress

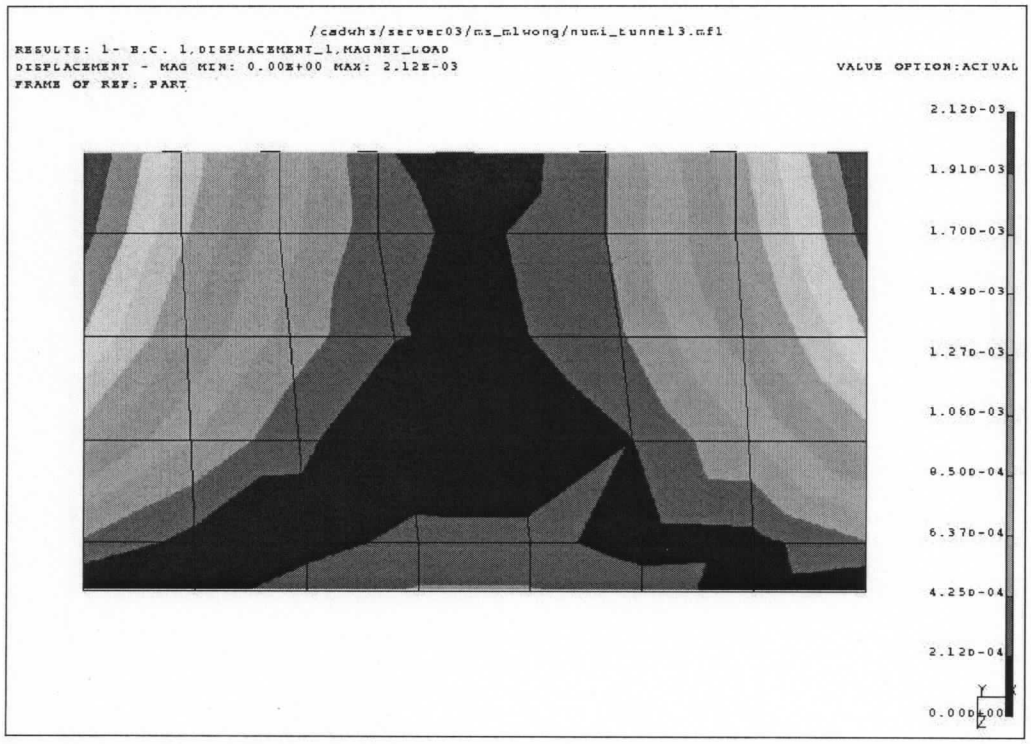

Figure 10 – FEA Results of Displacement

2.2.2 Vertical threaded rod - analysis of threads

Three threaded rods provide the path for vertical adjustment. For this analysis, assume that one rod sees the weight of the magnet: 444.5-pounds. The stainless steel rods have 1-8 UNC threads. The required torque on the screw to raise the magnet load, the bending stress on the threads, the shear stress on the threads, and the torsional shear stress on the root cylinder of the screw are calculated. Assuming that three threads support the load, each thread supports an applied load (P_a):

$P_a = 444.5 / 3 = 148.2$ lb.

To calculate the required torque needed to raise the load (weight of the magnet), the coefficient of friction in the system needs to be specified. The coefficient of friction between the threads is 0.15. The required torque T to raise the load is calculated from the applied load and taking into account the friction between threads of the screw and the spherical washer:

$$T = \frac{P_a d_m}{2}\left[\frac{L_{lead} + \pi\mu d_m \sec(\alpha)}{\pi d_m - \mu L_{lead}\sec(\alpha)}\right] + \frac{P_a \mu_c d_c}{2}$$

where d_m = mean (pitch) diameter = 0.9188 in.
p = pitch = 0.125 in.
L_{lead} = lead length = p = 0.125 in.
μ = friction = 0.15
α = thread angle = 60°/2 = 30°
μ_c = friction at spherical washer (collar) = 0.15
dc = mean diameter of spherical washer (collar) = 1.53 in.

T = 31.8 in-lb.

The term $\pi\mu d_m = 0.43$. Having $\pi\mu d_m > L_{lead}$ indicates that the screw is self-locking. To analyze the threads in bending, the threads are treated as beams. The load on one full thread is P_a. The bending stress at the root of the external thread is:

$$\sigma_{bend_thread} = \frac{M}{S}$$

where $M = \frac{P_a * p}{4} = 4.6$

$$S = \frac{\pi d\left(p/2\right)^2}{6} = 0.002$$

d = diameter of external thread = 1 in.

σ_{bend_thread} = 2245 psi

The transverse shear stress at the thread (to make sure that the thread is not stripped) is

$$\sigma_{v_thread} = \frac{P_a}{\pi d\left(\frac{p}{2}\right)}$$

$\sigma_{v_thread} = 754$ psi

According to the ASD Section F2.2, the allowable bending stress is $\sigma_b = 0.60\sigma_y$, where σ_y is the yield stress of the material.

$\sigma_b = 0.60\sigma_y$

where σ_y = yield stress of carbon steel = 36,000 psi

$\sigma_b = 21{,}600$ psi $> \sigma_{bext}$

The allowable shear stress, according to the ASD Section F4, is $\sigma_v = 0.40\sigma_y$.

$\sigma_v = 0.40\sigma_y$

$\sigma_v = 14{,}400$ psi. $> \sigma_{v_thread}$

The torsional shear stress σ_{vt} is calculated on the root cylinder of the screw based on the torque needed to raise the load:

$$\sigma_{vt} = \frac{16T}{\pi d_m^3}$$

$\sigma_{vt} = 71$ psi. $< \sigma_v$

2.2.3 Vertical threaded rod compressive buckling load

The threaded rod is 6.12-inch long. With its basic minor diameter of 0.8466-inch, the critical buckling load of the stud is:

$$P_{cr} = \frac{\pi^2 EI}{4L^2}$$

where E = modulus of elasticity of carbon steel = 28,000 ksi

I = moment of inertia = $\pi r^4/4 = 0.025$ in^4

L = 6.12 in.

$P_{cr} = 4.6\text{x}10^5$ lb.

The entire weight of the magnet (444.5-pounds) can be accommodated as a compressive load on the threaded rod.

2.2.4 Spherical nut thread strength

For one full internal thread, the bending stress at the root is:

$$\sigma_{b_thread} = \frac{3P_a}{\pi d_{int}\left(p/2\right)}$$

where $d_{int} = 1$ in.

$\sigma_{b_int} = 2261$ psi

The shear stress at the thread is

$$\sigma_{v_int} = \frac{P_a}{\pi d_{int}\left(p/2\right)}$$

$\sigma_{v_int} = 754$ psi

According to the ASD Section F2.2, the allowable bending stress is $\sigma_b = 0.60\sigma_y$, where σ_y is the yield stress of the material.

$\sigma_b = 0.60\sigma_y$

where σ_y = yield stress of stainless steel = 30,000 psi

$\sigma_b = 18{,}000$ psi $> \sigma_{bint}$

The allowable shear stress, according to the ASD Section F4, is $\sigma_v = 0.40\sigma_y$.

$\sigma_v = 0.40\sigma_y$

$\sigma_v = 12{,}000$ psi. $> \sigma_{vext}$

2.2.5 Torque on horizontal adjusting screw

Horizontal screws are used to adjust the magnet's horizontal position. The ¾-10UNC screw pushes a steel adjustment plate along a steel surface. Assume that the total weight on the adjustment plate is 500-pounds and the coefficient of friction is 0.20. This is a conservative assumption because the bearing surface of the adjustment plate will have a dry film lubricant (Dicronite) on it that gives a coefficient of friction of 0.03. The applied load is calculated:

$P_a = \mu_s W$

Where μ_s = coefficient of friction between steel surfaces = 0.20

W = vertical load on adjustment plate = 500 lb.

$P_a = 100$ lb.

The required torque is calculated using the same assumptions about the coefficient of friction between screw threads in Section 2.2.2:

$$T = \frac{P_a d_m}{2}\left[\frac{L_{lead} + \pi\mu d_m \sec(\alpha)}{\pi d_m - \mu L_{lead}\sec(\alpha)}\right]$$

where d_m = pitch diameter = 0.6850 in.
p = pitch = 0.1 in.
L_{lead} = lead length = p = 0.1 in.
μ = friction = 0.15
α = thread angle = 60°/2 = 30°

T = 7.5 in-lb.

The transverse shear stress at the thread (to make sure that the thread is not stripped) is

$$\sigma_{v_thread} = \frac{P_a}{\pi d\left(p/2\right)}$$

where d = diameter of external thread = 0.75 in.

σ_{v_thread} = 849 psi

The allowable shear stress, according to the ASD Section F4, is $\sigma_v = 0.40\sigma_y$.

$\sigma_v = 0.40\sigma_y$
σ_v = 12,000 psi.(for stainless steel)

The torsional shear stress σ_{vt} is calculated on the root cylinder of the screw based on the torque needed to raise the load:

$$\sigma_{vt} = \frac{16T}{\pi d_m^3}$$

σ_{vt} = 118 psi. < σ_v

2.2.6 Bending of adjuster base plate/base top plate weldment

The adjuster is welded to the base of the magnet stand. The weldment results in a beam that is 1.25-inches thick. The beam experiences a maximum bending stress in between the legs of the base weldment. The beam is analyzed with a uniform load held by fixed ends. The maximum bending moment and stress are calculated:

$$M_{max} = \frac{qL^2}{24}$$

where q = 500 lb./24 in. = 20.8 lb/in
L = 8.5 in.

M_{max} = 62.7 in-lb.

$$\sigma_{max} = \frac{M_{max}\,y}{I}$$

where y = half of the beam thickness = 0.625 in.

b = 19.5 in.

h = 1.25 in.

$$I = \frac{bh^3}{12} = 3.2 \text{ in4}$$

σ_{max} = 12.4 psi.

According to ASD Section F2.1, a steel beam that is bent about its weaker axis has an allowable stress of $\sigma_{allow} = 0.75\sigma_{yield}$ = 27,000 psi. The maximum stress experienced by the assembly is far less than the allowable.

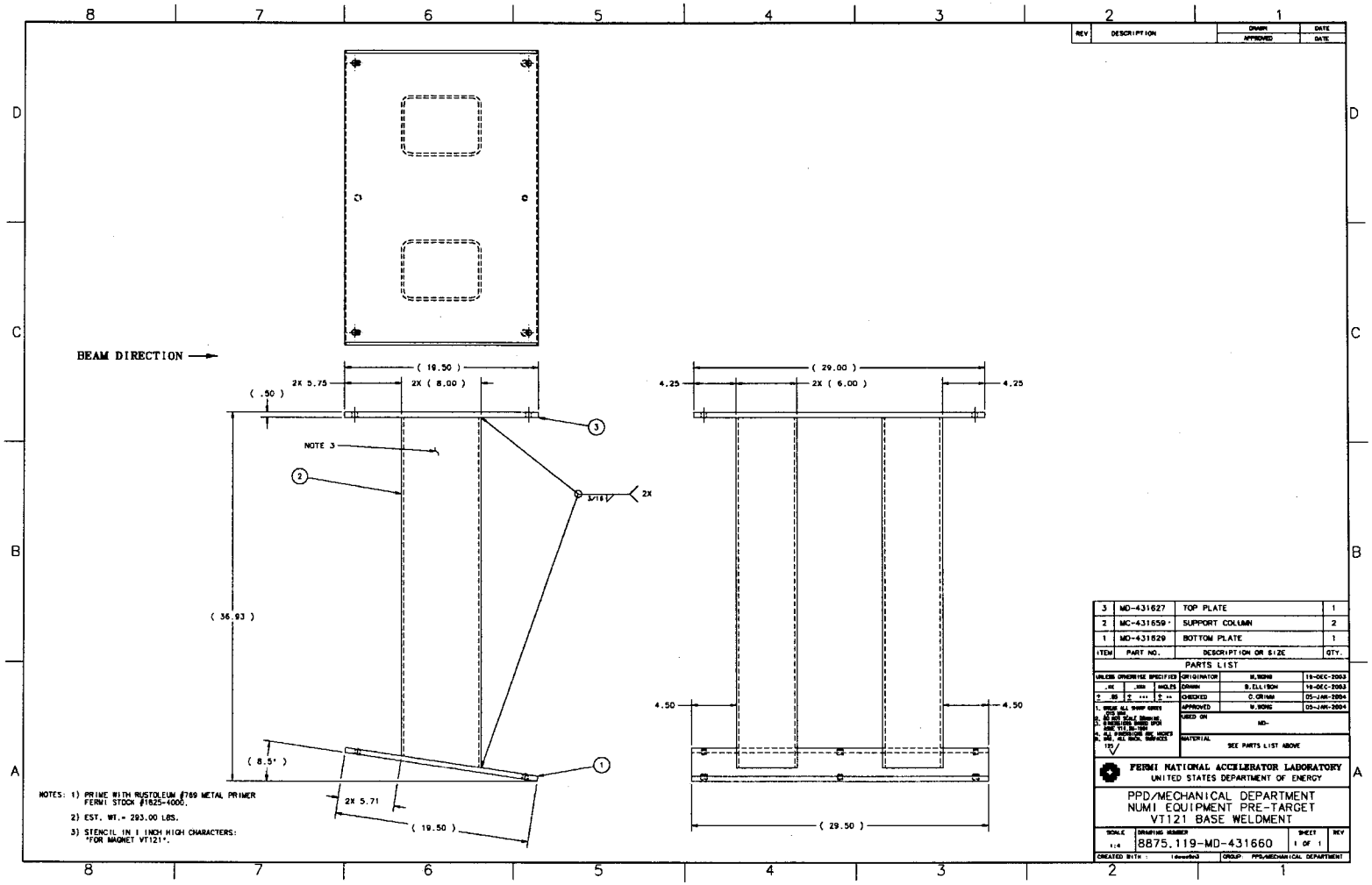

Figure 11 - Typical Base Weldment (Drawing 8875.119-MD-431660)

2.3 Base assembly

Figure 11 shows the drawing of the base for the trim magnet stand that sits at a 9.0° slope (drawing MD-431660), which is the largest slope for the trim magnet stand. The stand holds a load of 500-pounds, including the magnet and the adjuster.

2.3.1 Bending load on the legs

Figure 12 shows the dimension of the leg for the tallest base that is used in the tunnel.

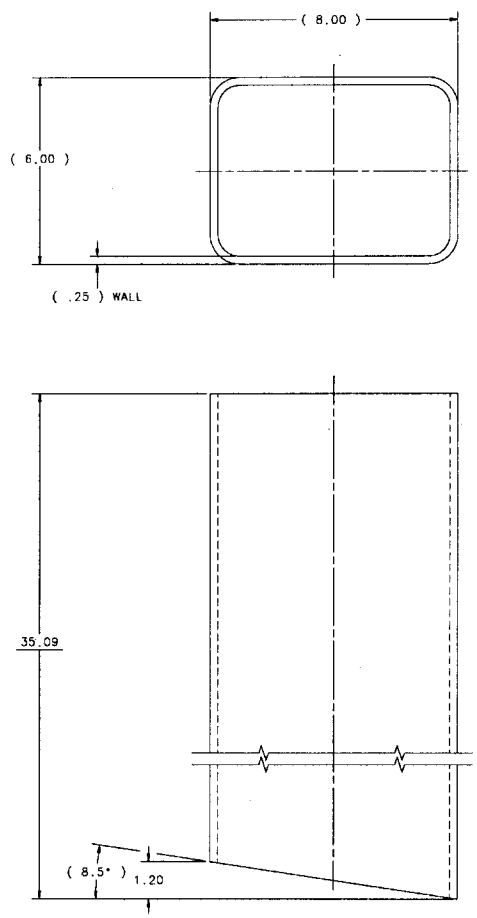

Figure 12 – Dimensions of Leg for 8.5° Slope Base

Even though the base is made up of two legs, one leg is analyzed to take the entire weight of the magnet and adjuster. Let the leg experience 500-pounds along its axis due to the combined weight of the magnet and adjuster. With the leg cut and resting at an angle, the leg experiences some bending. The equivalent bending moment on the leg at its top and its center is calculated from the reactionary force at the angled part of the leg:

$R = 500 \cos 8.5°$
$R = 494.5$ lb.

$l = 34.5$ in.

$a = l*\sin 8.5°$
$a = 5.1$ in.

$M = R*a$
$M = 2522$ in-lb.

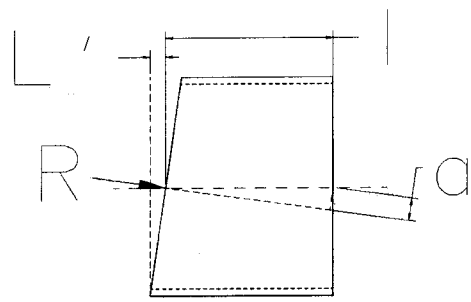

The stress in the leg is calculated:

$$\sigma = \frac{My}{I}$$

where $y = 4$ in.
$I = (bd^3 - b_i d_i^3)/12 = 62.6 \text{ in}^4$

$\sigma = 162$ psi.

The allowable bending stress for a stainless steel part(ASD Section F2.2) is $\sigma_{allow} = 0.60*\sigma_{yield} = 0.60(36000) = 21{,}600$ psi. Thus, the bending that the leg experiences is well within the allowable under normal load conditions by the weight of the magnet.

2.3.2 Shear load on anchor bolts

The Hilti Kwik II anchor bolts that hold the base to the tunnel floor will have a shear force acting on them. The magnitude of the shear force is calculated:

$V = 500 \sin 8.5°$
$V = 74$ lb.

The anchor bolts have a diameter of ½ inch and an allowable shear load of 1940 lb each. Thus for just one bolt the shear load is within allowable according to the manufacturer.

2.3.3 Torque requirement and thread strength of leveling bolts

Three bolts are threaded through the bottom plate of the base and are used to help level the base during installation. The bolts are ¾ -13UNC 2-inch long. During installation of the magnet stand, bolts will be in compression due to the weight of the base assembly and the adjuster assembly. Thus the three bolts must support a weight of 200-pounds. Assuming one bolt supports the entire load, let the applied load $P_a = 200$-pounds. With the coefficient of friction between steel surfaces being $\mu = 0.2$, the required torque T to raise the load is calculated from the torque load:

$$T = \frac{P_a d_m}{2}\left[\frac{L_{lead} + \pi\mu d_m \sec(\alpha)}{\pi d_m - \mu L_{lead}\sec(\alpha)}\right]$$

where d_m = mean (pitch) diameter = 0.6875 in.
L_{lead} = lead length = 0.077 in.
μ = friction = 0.20
α = thread angle = 60°/2 = 30°

T = 18.5 in-lb.

The term $\pi\mu d_m = 1.1$. Having $\pi\mu d_m > L_{lead}$ indicates that the screw is self-locking. For this analysis, the threads are treated as beams in bending. The bending stress at the root of the external thread is:

$$\sigma_{b_ext} = \frac{3P_a}{\pi d\left(p/2\right)}$$

where d = diameter of external thread = 0.75 in.
p = pitch = 0.077 in.

σ_{b_ext} = 6614 psi

The shear stress at the thread is

$$\sigma_{v_ext} = \frac{P_a}{\pi d\left(p/2\right)}$$

σ_{vint} = 2205 psi

According to the ASD Section F2.2, the allowable bending stress is $\sigma_b = 0.60\sigma_y$, where σ_y is the yield stress of the material.

$\sigma_b = 0.60\sigma_y$
where σ_y = yield stress of carbon steel = 36,000 psi
σ_b = 21,600 psi > σ_{bext}

The allowable shear stress, according to the ASD Section F4, is $\sigma_v = 0.40\sigma_y$.

$\sigma_v = 0.40\sigma_y$
σ_v = 14,400 psi. > σ_{vext}

The torsional shear stress σ_{vt} is calculated on the root cylinder of the screw:

$$\sigma_{vt} = \frac{16T}{\pi d_m^3}$$

σ_{vt} = 674 psi. < σ_v