Fermilab

Particle Physics Division
Mechanical Department Engineering Note

Number: MD-ENG- 018 Date: 13 October 2003

Project Internal Reference:

Project: NuMI

Title: Decay Pipe End Cap Test Spool

Author(s): Dave Pushka

Reviewer(s): 10-15-03

Key Words: Vacuum Vessel

Abstract Summary:
The NuMI Vacuum Decay Pipe is 2215 feet long. Two end caps were designed and built at Fermilab for installation on the vacuum decay pipe and are documented on an existing engineering note for vacuum decay pipe.

Prior to installing these end caps on the long vacuum decay pipe, it was decided to test them by temporarily installing them on a short (18" long) pipe spool of the same diameter as the final vacuum decay pipe. This engineering note documents the ASME pressure vessel code calculations for external pressure loading on this short, 18" long vacuum spool.

Ref: Drawing 8875-114-MD-431410

Applicable Codes: ASME Section VIII

DELAY PIPE END TEST SPOOL 3 SEPT 2003 D. POSHIKA

REF: ASME VIII DIV. 1 PART UG-28

$D_o = 78''$ = OUTSIDE DIAMETER

$t = 1/2''$ (TRIAL THICKNESS)

$D_o/t = 78/1/2 = 156$

$L = 18''$

$L/D_o = 18/78 = 0.230$

FROM ASME II PART D, FIG. G, FACTOR A = 0.005

FROM ASME II PART D, FIG CS-1, FACTOR B = 13,000

$$P_a = \frac{4B}{3(D_o/t)} = \frac{4}{3} \cdot \frac{13{,}000}{(156)} = 111 \text{ psi}$$

111 psi > 14.7 psi ∴ OK

Subpart 3

CHARTS AND TABLES FOR DETERMINING SHELL THICKNESS OF COMPONENTS UNDER EXTERNAL PRESSURE

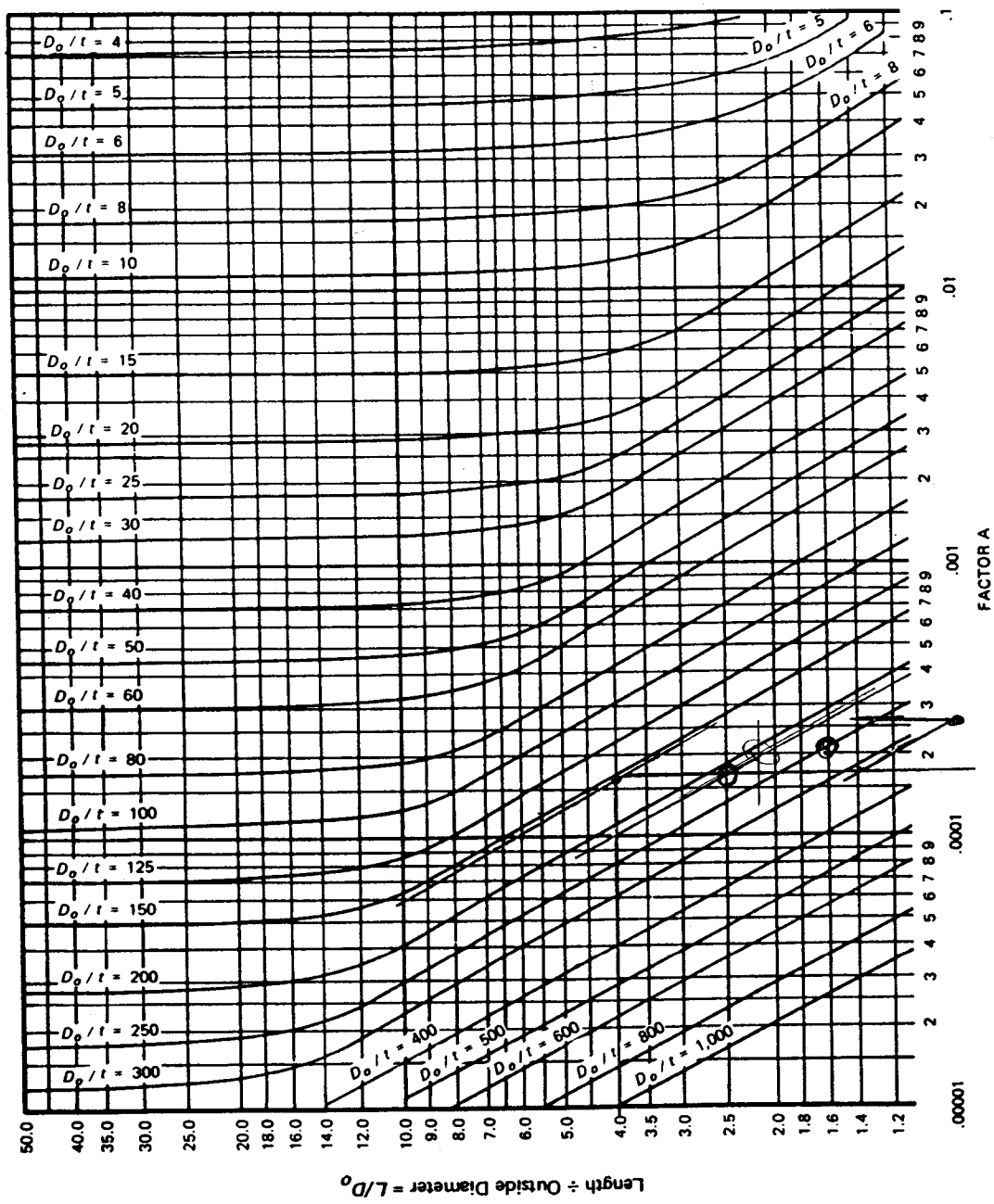
Do / t = 4
Do / t = 5
Do / t = 6
Do / t = 8
Do / t = 10
Do / t = 15
Do / t = 20
Do / t = 25
Do / t = 30
Do / t = 40
Do / t = 50
Do / t = 60
Do / t = 80
Do / t = 100
Do / t = 125
Do / t = 150
Do / t = 200
Do / t = 250
Do / t = 300
Do / t = 400
Do / t = 500
Do / t = 600
Do / t = 800
Do / t = 1,000
Do / t = 5
Do / t = 6
Do / t = 8
50.0
40.0
35.0
30.0
25.0
20.0
18.0
16.0
14.0
12.0
10.0
9.0
8.0
7.0
6.0
5.0
4.0
3.5
3.0
2.5
2.0
1.8
1.6
1.4
1.2
Length ÷ Outside Diameter = L/Do
.00001
.0001
.001
.01
.1
FACTOR A

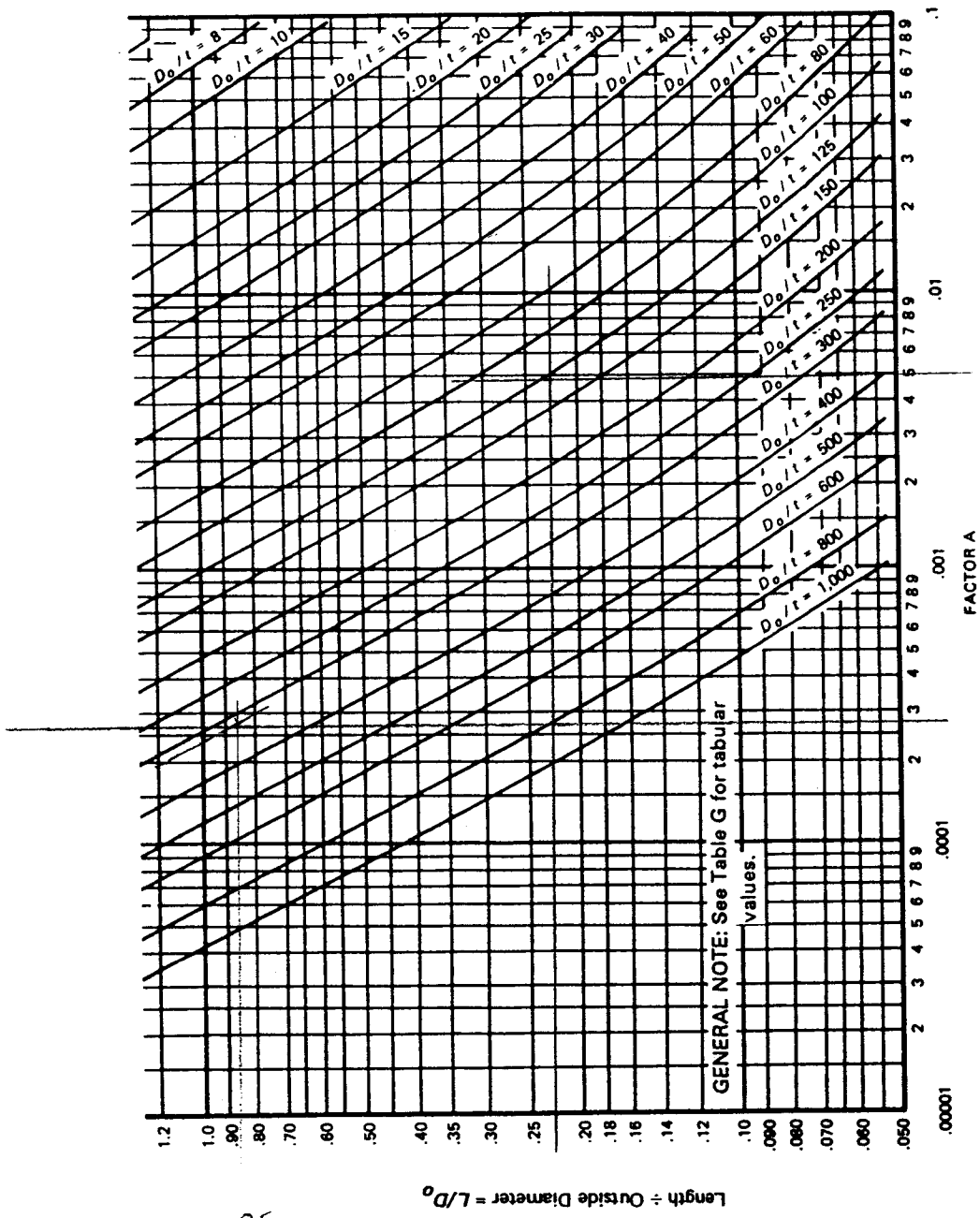

FIG. G GEOMETRIC CHART FOR COMPONENTS UNDER EXTERNAL OR COMPRESSIVE LOADINGS (FOR ALL MATERIALS)

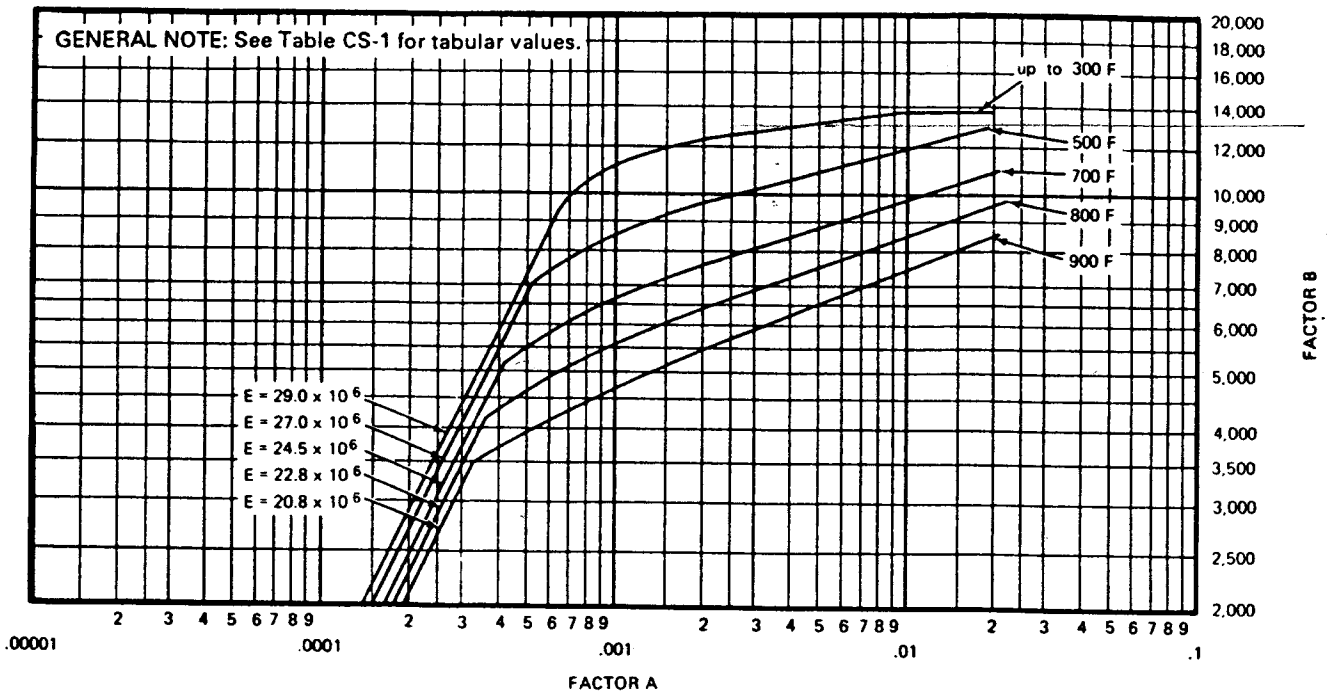

FIG. CS-1 CHART FOR DETERMINING SHELL THICKNESS OF COMPONENTS UNDER EXTERNAL PRESSURE WHEN CONSTRUCTED OF CARBON OR LOW ALLOY STEELS (SPECIFIED MINIMUM YIELD STRENGTH 24,000 psi TO, BUT NOT INCLUDING, 30,000 psi) [NOTE (1)]

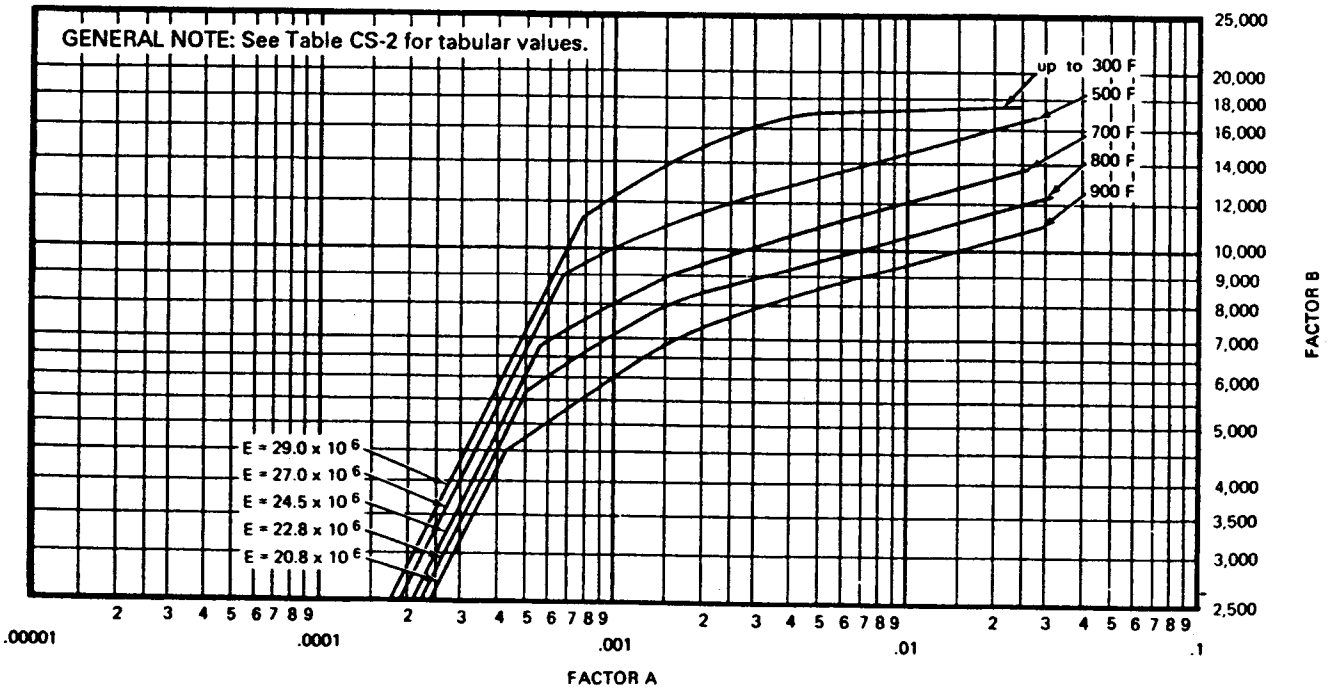

FIG. CS-2 CHART FOR DETERMINING SHELL THICKNESS OF COMPONENTS UNDER EXTERNAL PRESSURE WHEN CONSTRUCTED OF CARBON OR LOW ALLOY STEELS (SPECIFIED MINIMUM YIELD STRENGTH 30,000 psi AND OVER EXCEPT FOR MATERIALS WITHIN THIS RANGE WHERE OTHER SPECIFIC CHARTS ARE REFERENCED) AND TYPE 405 AND TYPE 410 STAINLESS STEELS [NOTE (1)]

are to be used in vessels to contain lethal substances (UW-2).

(a) Castings of cast iron (UCI-2) and cast ductile iron (UCD-2) are prohibited.

(b) Each casting of nonferrous material permitted by this Division shall be radiographed at all critical sections (see footnote 1, Appendix 7) without revealing any defects. The quality factor for nonferrous castings for lethal service shall not exceed 90%.

(c) Each casting of steel material permitted by this Division shall be examined per Appendix 7 for severe service applications [7-3(b)]. The quality factor for lethal service shall not exceed 100%.

(b) Defects. Imperfections defined as unacceptable by either the material specification or by Appendix 7, 7-3, whichever is more restrictive, are considered to be defects and shall be the basis for rejection of the casting. Where defects have been repaired by welding, the completed repair shall be subject to reexamination and, when required by either the rules of this Division or the requirements of the castings specification, the repaired casting shall be postweld heat treated and, to obtain a 90% or 100% quality factor, the repaired casting shall be stress relieved.

(c) Identification and Marking. Each casting to which a quality factor greater than 80% is applied shall be marked with the name, trademark, or other traceable identification of the manufacturer and the casting identification, including the casting quality factor and the material designation.

UG-25 CORROSION

(a) The user or his designated agent (see U-2) shall specify corrosion allowances other than those required by the rules of this Division. Where corrosion allowances are not provided, this fact shall be indicated on the Data Report.

(b) Vessels or parts of vessels subject to thinning by corrosion, erosion, or mechanical abrasion shall have provision made for the desired life of the vessel by a suitable increase in the thickness of the material over that determined by the design formulas, or by using some other suitable method of protection. (See Appendix E.)

NOTE: When using high alloys and nonferrous materials either for solid wall or clad or lined vessels, refer to UHA-6, UCL-3, and UNF-4, as appropriate.

(c) Material added for these purposes need not be of the same thickness for all parts of the vessel if different rates of attack are expected for the various parts.

(d) No additional thickness need be provided when previous experience in like service has shown that corrosion does not occur or is of only a superficial nature.

(e) Telltale Holes. Telltale holes may be used to provide some positive indication when the thickness has been reduced to a dangerous degree. Telltale holes shall not be used in vessels which are to contain lethal substances [see UW-2(a)], except as permitted by ULW-76 for vent holes in layered construction. When telltale holes are provided, they shall have a diameter of $^1/_{16}$ in. to $^3/_{16}$ in. (1.6 mm to 4.8 mm) and have a depth not less than 80% of the thickness required for a seamless shell of like dimensions. These holes shall be provided in the opposite surface to that where deterioration is expected. [For telltale holes in clad or lined vessels, see UCL-25(b).]

(f) Openings for Drain. Vessels subject to corrosion shall be supplied with a suitable drain opening at the lowest point practicable in the vessel; or a pipe may be used extending inward from any other location to within $^1/_4$ in. (6 mm) of the lowest point.

UG-26 LININGS

Corrosion resistant or abrasion resistant linings, whether or not attached to the wall of a vessel, shall not be considered as contributing to the strength of the wall except as permitted in Part UCL (see Appendix F).

UG-27 THICKNESS OF SHELLS UNDER INTERNAL PRESSURE

(a) The thickness of shells under internal pressure shall be not less than that computed by the following formulas.[14] In addition, provision shall be made for any of the other loadings listed in UG-22, when such loadings are expected. (See UG-16.)

(b) The symbols defined below are used in the formulas of this paragraph.

t = minimum required thickness of shell, in.

P = internal design pressure (see UG-21), psi

R = inside radius of the shell course under consideration,[15] in.

S = maximum allowable stress value, psi (see UG-23 and the stress limitations specified in UG-24)

[14] Formulas in terms of the outside radius and for thicknesses and pressures beyond the limits fixed in this paragraph are given in 1-1 to 1-3.

[15] For pipe, the inside radius R is determined by the nominal outside radius minus the nominal wall thickness.

E = joint efficiency for, or the efficiency of, appropriate joint in cylindrical or spherical shells, or the efficiency of ligaments between openings, whichever is less.

For welded vessels, use the efficiency specified in UW-12.

For ligaments between openings, use the efficiency calculated by the rules given in UG-53.

(c) Cylindrical Shells. The minimum thickness or maximum allowable working pressure of cylindrical shells shall be the greater thickness or lesser pressure as given by (1) or (2) below.

(1) Circumferential Stress (Longitudinal Joints). When the thickness does not exceed one-half of the inside radius, or P does not exceed $0.385SE$, the following formulas shall apply:

$$t = \frac{PR}{SE - 0.6P} \quad \text{or} \quad P = \frac{SEt}{R + 0.6t} \qquad (1)$$

(2) Longitudinal Stress (Circumferential Joints).[16] When the thickness does not exceed one-half of the inside radius, or P does not exceed $1.25SE$, the following formulas shall apply:

$$t = \frac{PR}{2SE + 0.4P} \quad \text{or} \quad P = \frac{2SEt}{R - 0.4t} \qquad (2)$$

(d) Spherical Shells. When the thickness of the shell of a wholly spherical vessel does not exceed $0.356R$, or P does not exceed $0.665SE$, the following formulas shall apply:

$$t = \frac{PR}{2SE - 0.2P} \quad \text{or} \quad P = \frac{2SEt}{R + 0.2t} \qquad (3)$$

(e) When necessary, vessels shall be provided with stiffeners or other additional means of support to prevent overstress or large distortions under the external loadings listed in UG-22 other than pressure and temperature.

(f) A stayed jacket shell that extends completely around a cylindrical or spherical vessel shall also meet the requirements of UG-47(c).

(g) Any reduction in thickness within a shell course or spherical shell shall be in accordance with UW-9.

[16] These formulas will govern only when the circumferential joint efficiency is less than one-half the longitudinal joint efficiency, or when the effect of supplementary loadings (UG-22) causing longitudinal bending or tension in conjunction with internal pressure is being investigated. An example illustrating this investigation is given in L-2.1 and L-2.2.

UG-28 THICKNESS OF SHELLS AND TUBES UNDER EXTERNAL PRESSURE A99

(a) Rules for the design of shells and tubes under external pressure given in this Division are limited to cylindrical shells, with or without stiffening rings, tubes, and spherical shells. Three typical forms of cylindrical shells are shown in Fig. UG-28. Charts used in determining minimum required thicknesses of these components are given in Subpart 3 of Section II, Part D.

(b) The symbols defined below are used in the procedures of this paragraph:

A = factor determined from Fig. G in Subpart 3 of Section II, Part D and used to enter the applicable material chart in Subpart 3 of Section II, Part D. For the case of cylinders having D_o/t values less than 10, see UG-28(c)(2).

B = factor determined from the applicable material chart in Subpart 3 of Section II, Part D for maximum design metal temperature, psi [see UG-20(c)]

D_o = outside diameter of cylindrical shell course or tube, in.

E = modulus of elasticity of material at design temperature, psi. For external pressure design in accordance with this Section, the modulus of elasticity to be used shall be taken from the applicable materials chart in Subpart 3 of Section II, Part D.[17] (Interpolation may be made between lines for intermediate temperatures.)

L = total length, in., of a tube between tubesheets, or design length of a vessel section between lines of support (see Fig. UG-28.1). A line of support is:

(1) a circumferential line on a head (excluding conical heads) at one-third the depth of the head from the head tangent line as shown on Fig. UG-28;

(2) a stiffening ring that meets the requirements of UG-29;

(3) a jacket closure of a jacketed vessel that meets the requirements of 9-5;

(4) a cone-to-cylinder junction or a knuckle-to-cylinder junction of a toriconical head or section which satisfies the moment of inertia requirement of 1-8.

P = external design pressure, psi [see Note in UG-28(f)]

[17] Note that the modulus of elasticity values listed in UF-27 of this Division shall not be used for external pressure design.

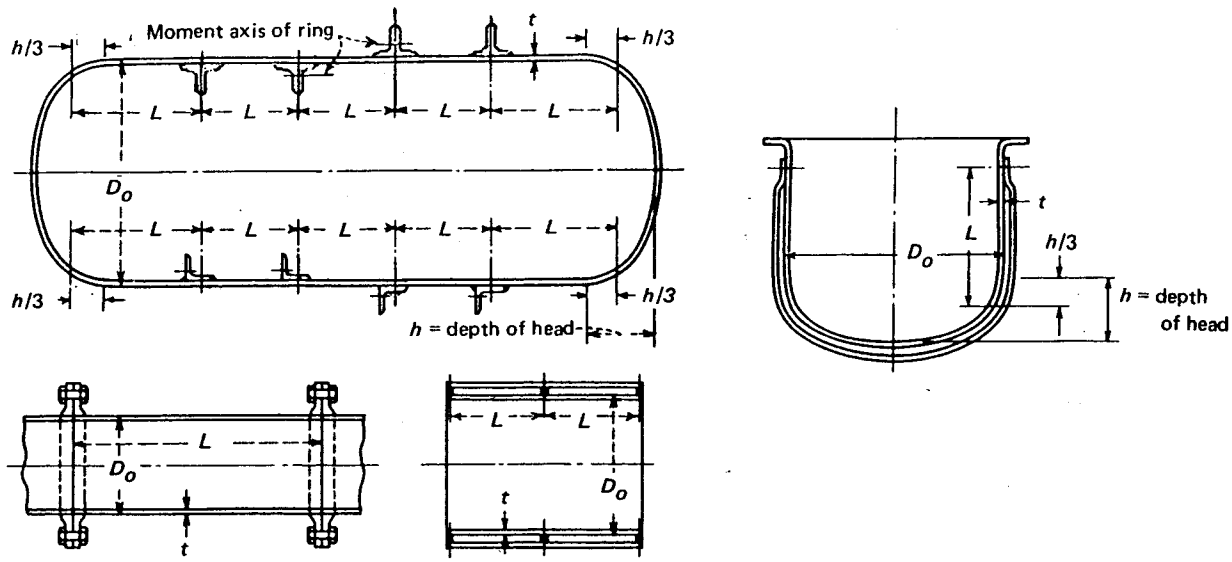

FIG. UG-28 DIAGRAMMATIC REPRESENTATION OF VARIABLES FOR DESIGN OF CYLINDRICAL VESSELS SUBJECTED TO EXTERNAL PRESSURE

P_a = calculated value of maximum allowable external working pressure for the assumed value of t, psi [see Note in (f) below]

R_o = outside radius of spherical shell, in.

t = minimum required thickness of cylindrical shell or tube, or spherical shell, in.

t_s = nominal thickness of cylindrical shell or tube, in.

(c) Cylindrical Shells and Tubes. The required minimum thickness of a cylindrical shell or tube under external pressure, either seamless or with longitudinal butt joints, shall be determined by the following procedure.

(1) Cylinders having D_o/t values $\geq$ 10:

Step 1. Assume a value for t and determine the ratios L/D_o and D_o/t.

Step 2. Enter Fig. G in Subpart 3 of Section II, Part D at the value of L/D_o determined in Step 1. For values of L/D_o greater than 50, enter the chart at a value of L/D_o = 50. For values of L/D_o less than 0.05, enter the chart at a value of L/D_o = 0.05.

Step 3. Move horizontally to the line for the value of D_o/t determined in Step 1. Interpolation may be made for intermediate values of D_o/t. From this point of intersection move vertically downward to determine the value of factor A.

Step 4. Using the value of A calculated in Step 3, enter the applicable material chart in Subpart 3 of Section II, Part D for the material under consideration. Move vertically to an intersection with the material/temperature line for the design temperature (see UG-20). Interpolation may be made between lines for intermediate temperatures.

In cases where the value of A falls to the right of the end of the material/temperature line, assume an intersection with the horizontal projection of the upper end of the material/temperature line. For values of A falling to the left of the material/temperature line, see Step 7.

Step 5. From the intersection obtained in Step 4, move horizontally to the right and read the value of factor B.

Step 6. Using this value of B, calculate the value of the maximum allowable external working pressure P_a using the following formula:

$$P_a = \frac{4B}{3(D_o/t)}$$

Step 7. For values of A falling to the left of the applicable material/temperature line, the value of P_a can be calculated using the following formula:

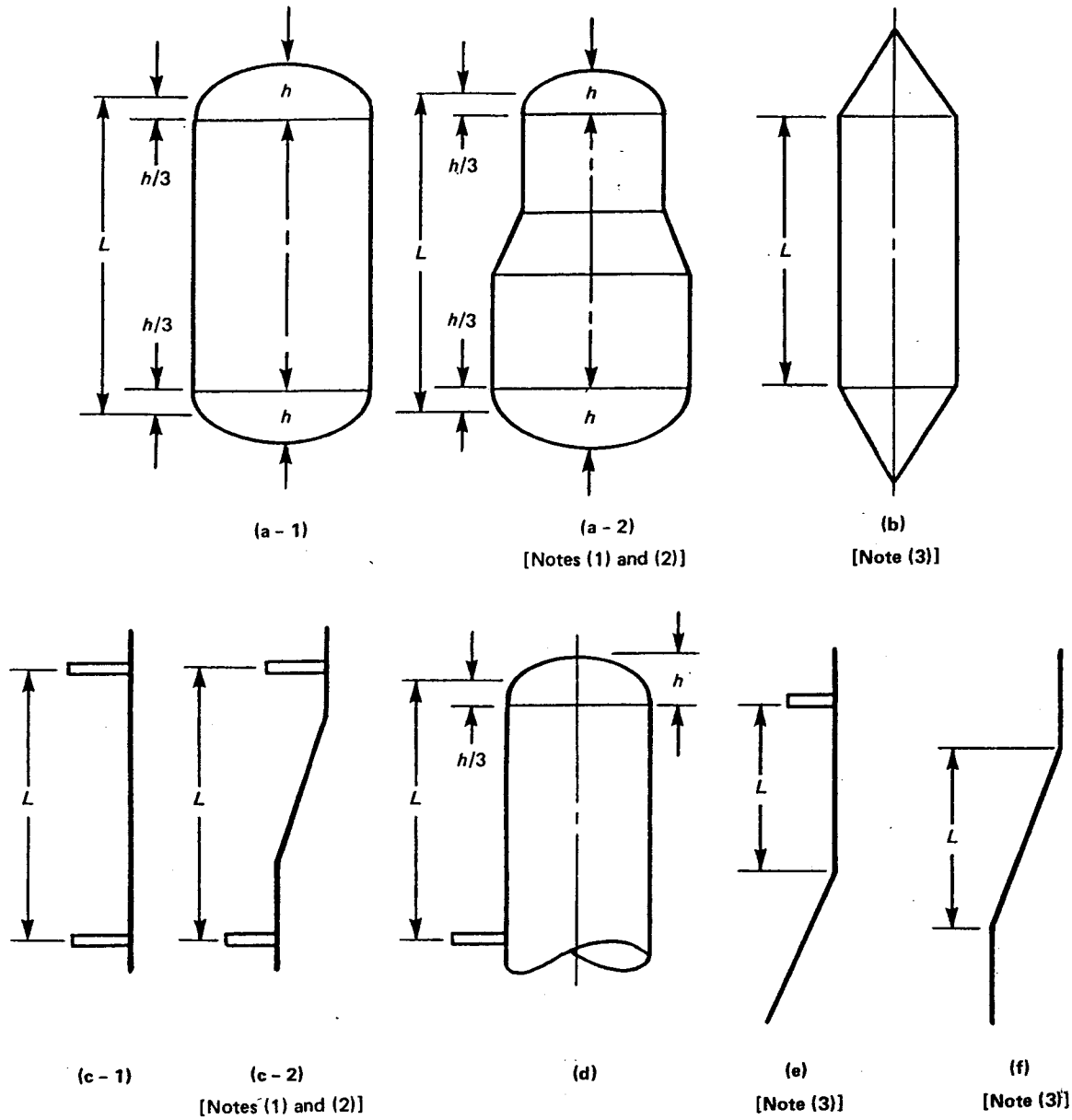

NOTES:

(1) When the cone-to-cylinder or the knuckle-to-cylinder junction is not a line of support, the nominal thickness of the cone, knuckle, or toriconical section shall not be less than the minimum required thickness of the adjacent cylindrical shell.

(2) Calculations shall be made using the diameter and corresponding thickness of each section with dimension *L* as shown.

(3) When the cone-to-cylinder or the knuckle-to-cylinder junction is a line of support, the moment of inertia shall be provided in accordance with 1-8.

FIG. UG-28.1 DIAGRAMMATIC REPRESENTATION OF LINES OF SUPPORT FOR DESIGN OF CYLINDRICAL VESSELS SUBJECTED TO EXTERNAL PRESSURE

$$P_a = \frac{2AE}{3(D_o/t)}$$

Step 8. Compare the calculated value of P_a obtained in Steps 6 or 7 with P. If P_a is smaller than P, select a larger value for t and repeat the design procedure until a value of P_a is obtained that is equal to or greater than P. An example illustrating the use of this procedure is given in L-3(a).

(2) Cylinders having D_o/t values <10:

Step 1. Using the same procedure as given in UG-28(c)(1), obtain the value of B. For values of D_o/t less than 4, the value of factor A can be calculated using the following formula:

$$A = \frac{1.1}{(D_o/t)^2}$$

For values of A greater than 0.10, use a value of 0.10.

Step 2. Using the value of B obtained in Step 1, calculate a value P_{a1} using the following formula:

$$P_{a1} = \left[\frac{2.167}{(D_o/t)} - 0.0833\right] B$$

Step 3. Calculate a value P_{a2} using the following formula:

$$P_{a2} = \frac{2S}{D_o/t}\left[1 - \frac{1}{D_o/t}\right]$$

where S is the lesser of two times the maximum allowable stress value in tension at design metal temperature, from the applicable table referenced in UG-23, or 0.9 times the yield strength of the material at design temperature. Values of yield strength are obtained from the applicable external pressure chart as follows:

(a) For a given temperature curve, determine the B value that corresponds to the right hand side termination point of the curve.

(b) The yield strength is twice the B value obtained in (a) above.

Step 4. The smaller of the values of P_{a1} calculated in Step 2, or P_{a2} calculated in Step 3 shall be used for the maximum allowable external working pressure P_a. Compare P_a with P. If P_a is smaller than P, select a larger value for t and repeat the design procedure until a value for P_a is obtained that is equal to or greater than P.

(d) Spherical Shells. The minimum required thickness of a spherical shell under external pressure, either seamless or of built-up construction with butt joints, shall be determined by the following procedure:

Step 1. Assume a value for t and calculate the value of factor A using the following formula:

$$A = \frac{0.125}{(R_o/t)}$$

Step 2. Using the value of A calculated in Step 1, enter the applicable material chart in Subpart 3 of Section II, Part D for the material under consideration. Move vertically to an intersection with the material/temperature line for the design temperature (see UG-20). Interpolation may be made between lines for intermediate temperatures.

In cases where the value at A falls to the right of the end of the material/temperature line, assume an intersection with the horizontal projection of the upper end of the material/temperature line. For values at A falling to the left of the material/temperature line, see Step 5.

Step 3. From the intersection obtained in Step 2, move horizontally to the right and read the value of factor B.

Step 4. Using the value of B obtained in Step 3, calculate the value of the maximum allowable external working pressure P_a using the following formula:

$$P_a = \frac{B}{(R_o/t)}$$

Step 5. For values of A falling to the left of the applicable material/temperature line, the value of P_a can be calculated using the following formula:

$$P_a = \frac{0.0625E}{(R_o/t)^2}$$

Step 6. Compare P_a obtained in Steps 4 or 5 with P. If P_a is smaller than P, select a larger value for t and repeat the design procedure until a value for P_a is obtained that is equal to or greater than P. An example illustrating the use of this procedure is given in L-3(b).

(e) The external design pressure or maximum allowable external working pressure shall not be less than the maximum expected difference in operating pressure that may exist between the outside and the inside of the vessel at any time.

(f) Vessels intended for service under external working pressures of 15 psi (103 kPa) and less [see U-1(c)(2)(h)] may be stamped with the Code Symbol denoting compliance with the rules for external pressure provided

all the applicable rules of this Division are satisfied. When the Code Symbol is to be applied, the user or his designated agent shall specify the required maximum allowable external working pressure.[18] The vessel shall be designed and stamped with the maximum allowable external working pressure.

(g) When there is a longitudinal lap joint in a cylindrical shell or any lap joint in a spherical shell under external pressure, the thickness of the shell shall be determined by the rules in this paragraph, except that $2P$ shall be used instead of P in the calculations for the required thickness.

(h) Circumferential joints in cylindrical shells may be of any type permitted by the Code and shall be designed for the imposed loads.

(i) Those portions of pressure chambers of vessels which are subject to a collapsing pressure and which have a shape other than that of a complete circular cylinder or formed head, and also jackets of cylindrical vessels which extend over only a portion of the circumference, shall be fully staybolted in accordance with the requirements of UG-47 through UG-50 or shall be proof tested in compliance with UG-101(p).

(j) When necessary, vessels shall be provided with stiffeners or other additional means of support to prevent overstress or large distortions under the external loadings listed in UG-22 other than pressure and temperature.

UG-29 STIFFENING RINGS FOR CYLINDRICAL SHELLS UNDER EXTERNAL PRESSURE

(a) Except as exempted in (f) below, the available moment of inertia of a circumferential stiffening ring shall be not less than that determined by one of the following two formulas:

$$I_s = [D_o^2 L_s(t + A_s/L_s)A]/14$$

$$I_s' = [D_o^2 L_s(t + A_s/L_s)A]/10.9$$

I_s = required moment of inertia of the stiffening ring cross section about its neutral axis parallel to the axis of the shell, in.^{4}

I_s' = required moment of inertia of the combined ring-shell cross section about its neutral axis parallel to the axis of the shell, in.^{4}

I = available moment of inertia of the stiffening ring cross section about its neutral axis parallel to the axis of the shell, in.^{4}

I' = available moment of inertia of combined ring-shell cross section about its neutral axis parallel to the axis of the shell, in.^{4} The nominal shell thickness t_s shall be used and the width of shell which is taken as contributing to the moment of inertia of the combined section shall not be greater than $1.10\sqrt{D_o t_s}$ and shall be taken as lying one-half on each side of the centroid of the ring. Portions of the shell plate shall not be considered as contributing area to more than one stiffening ring.

CAUTIONARY NOTE: Stiffening rings may be subject to lateral buckling. This should be considered in addition to the requirements for I_s and I'_s [see U-2(g)].

If the stiffeners should be so located that the maximum permissible effective shell sections overlap on either or both sides of a stiffener, the effective shell section for that stiffener shall be shortened by one-half of each overlap.

A_s = cross-sectional area of the stiffening ring, sq in.

A = factor determined from the applicable chart in Subpart 3 of Section II, Part D for the material used in the stiffening ring, corresponding to the factor B, below, and the design temperature for the shell under consideration

B = factor determined from the applicable chart in Subpart 3 of Section II, Part D for the material used for the stiffening ring, psi [see UG-20(c)]

L_s = one-half of the distance from the center line of the stiffening ring to the next line of support on one side, plus one-half of the center line distance to the next line of support on the other side of the stiffening ring, both measured parallel to the axis of the cylinder, in. A line of support is:

(1) a stiffening ring that meets the requirements of this paragraph;

(2) a circumferential connection to a jacket for a jacketed section of a cylindrical shell;

(3) a circumferential line on a head at one-third the depth of the head from the head tangent line as shown on Fig. UG-28;

(4) a cone-to-cylinder junction.

P, D_o, E, t, and t_s are as defined in UG-28(b).

[18] It is recommended that a suitable margin be provided when establishing the maximum allowable external working pressure to allow for pressure variations in service.

FNAL Purchase Order Inquiry — Fermilab Business Services

UNIVERSITIES RESEARCH ASSOCIATION INC.
FERMI NATIONAL ACCELERATOR LABORATORY
P.O. BOX 500 BATAVIA, ILLINOIS 60510
AREA CODE 630 840-3000

STANDARD PURCHASE ORDER NO. 553526
Status: APPROVED Reprints 2

YOUNGBERG INDUSTRIES INC
6863 INDY DRIVE
BELVIDERE, IL 61008

SHIP TO FERMILAB
RECEIVING WAREHOUSE 2
KIRK RD & WILSON STREET
BATAVIA, IL 60510 US

BILL TO FERMILAB
ACCOUNTS PAYABLE
PO BOX 500
BATAVIA, IL 60510 US

ORDER DATE	BUYER	TERMS:	F.O.B.	SHIP VIA:
30-Sep-2003	MYEOWARD	FROM RECEIPT OF GOODS OR INVOICE, WHICHEVER IS LATER	Destination	VENDORS CHOICE

Line	Item Description	Qty	U/M	Unit Price	Ext. Price	Work Pkg-CE	Req Number(s)
1	**MD-431410 REV. NONE; DECAY PIPE TEST SPOOL** **Promised Date: 15-Oct-2003** **Deliver To: PUSHKA, DAVID R.**	875.00	EACH	1.00	875.00	00000-41	166890

Project NuMITEC **Task** HDA Absorber Const **Task Number** 1.1.4.3.2.2
Exp. Org BD - NUMI **Exp. Type** MATERIAL PURCHASES
Task Org BD - NUMI **Service Type** PL-LI-NUMI

PO Total: 875.00

Approval History

Date/Time	Action	Who	NOTE
30-Sep-2003	APPROVE	YEOWARD	
30-Sep-2003	SUBMIT	YEOWARD	
30-Sep-2003	RESERVE	YEOWARD	
30-Sep-2003	SUBMIT	YEOWARD	

Shipment History

TRANSACTION DATE	DESCRIPTION	QUANTITY

Invoice History

DATE	NUMBER	WKP CE	PAID DATE	AMOUNT	HOLD?	HOLD REASON