Fermilab

Particle Physics Division
Mechanical Department Engineering Note

Number: MD-ENG-333 Date: 21 April 2011

Project Internal Reference: WBS 2.9.1.4

Project: NOvA

Title: NOvA Ash River Pivoter Assembly Sequence

Author(s): Dave Pushka

Reviewer(s):

Key Words: Pivoter, Assembly, Rigging

Applicable Codes: n/a

Abstract Summary:

This document presents the assembly sequence for the block pivoter in Ash River. It is anticipated that non-Fermilab staff will perform this work.

A similar document was not prepared for the FHEP pivoter since staff technicians worked directly from assembly drawings and enjoyed easy access to the engineering staff when questions arose. Such easy and rapid communications with the assembly staff in Ash River and the experienced Fermilab staff is no expected to exist due to the long travel time between the two locations. However, experience with the FHEP pivoter is implicitly incorporated into this document.

Step 1; Off-load the lower frame assemblies and set on the rails:

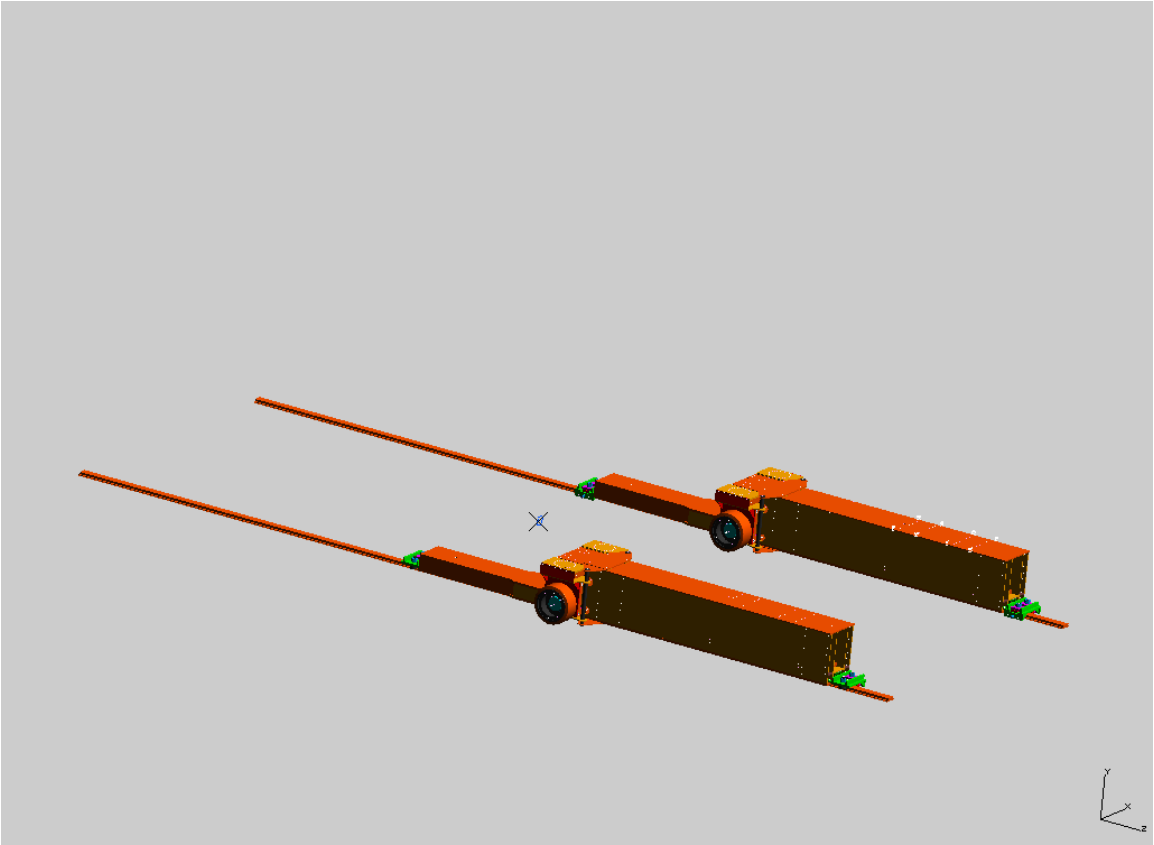

Each Lower Frame weighs approximately 31,100 pounds bare. Lifting points are included on the top surface of each lower frame weldment (near the ends) and are tapped holes for lifting swivels. See drawing ME-466518 for just the lower frame weldment.

Assembly includes:
Two Tire and wheel at 1100 pounds;
Two Hydraulic drive motor at 500 pounds;
Two Drive wheel weldments at 750 pounds (dwg 486340);
Three Hillman rollers at 750 pounds each for a total of 2250 pounds
Two Cam Follower Assemblies at about 800 pounds each for 1600 pounds as shown on drawing 486947.

Estimated Weight of the complete lower weldment assembly is 39,500 pounds (19.75 tons). Both 10 ton cranes will need to operate in tandem to set this assembly.

Estimated effort to off load each lower frame assembly and set on the rails is about 1 crew-day per side for a total of 2 crew days.

Step 2; Install forward cross tie Weldments

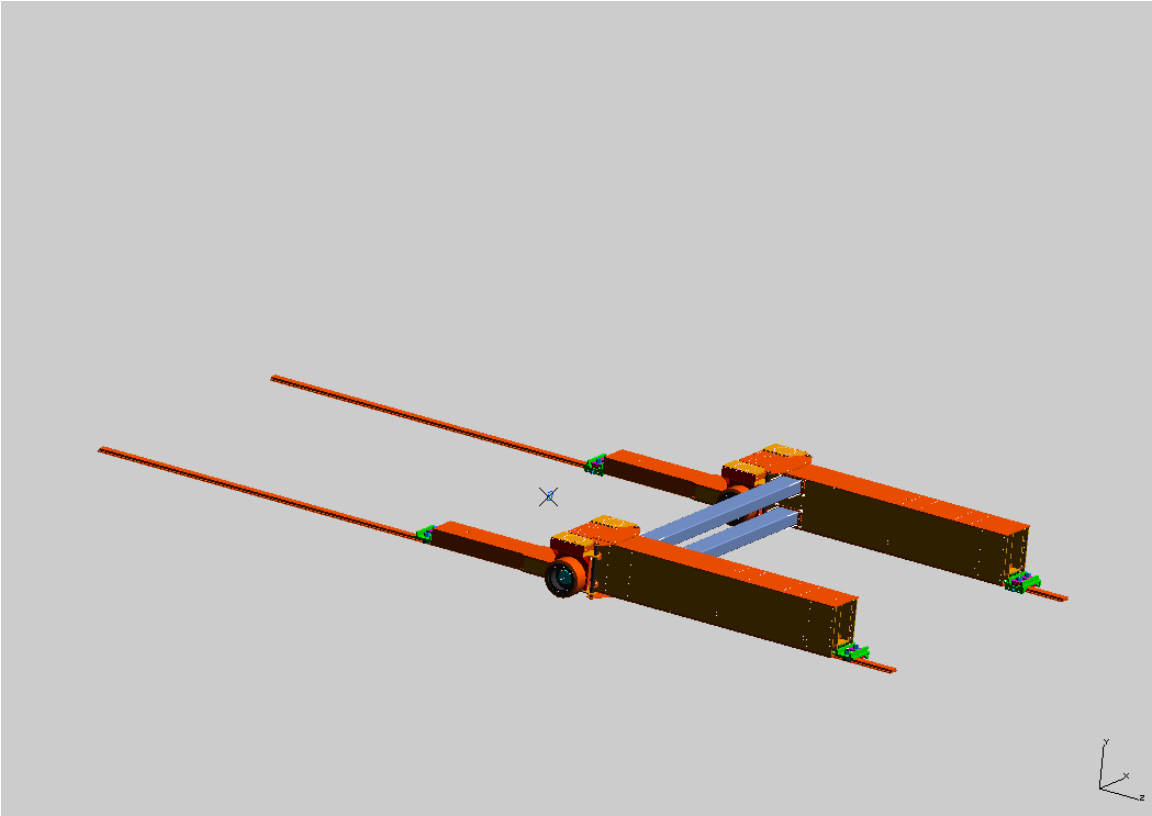

Each Forward Cross Tie Weldment weighs 2600 pounds and attaches with twelve ¾-10 A325 Structural bolts. See drawing MD-486836.

No lifting points are included on these weldments.

Anticipated effort to install both forward ties is less than one crew-day.

Step 3, Rear Bracket including shims

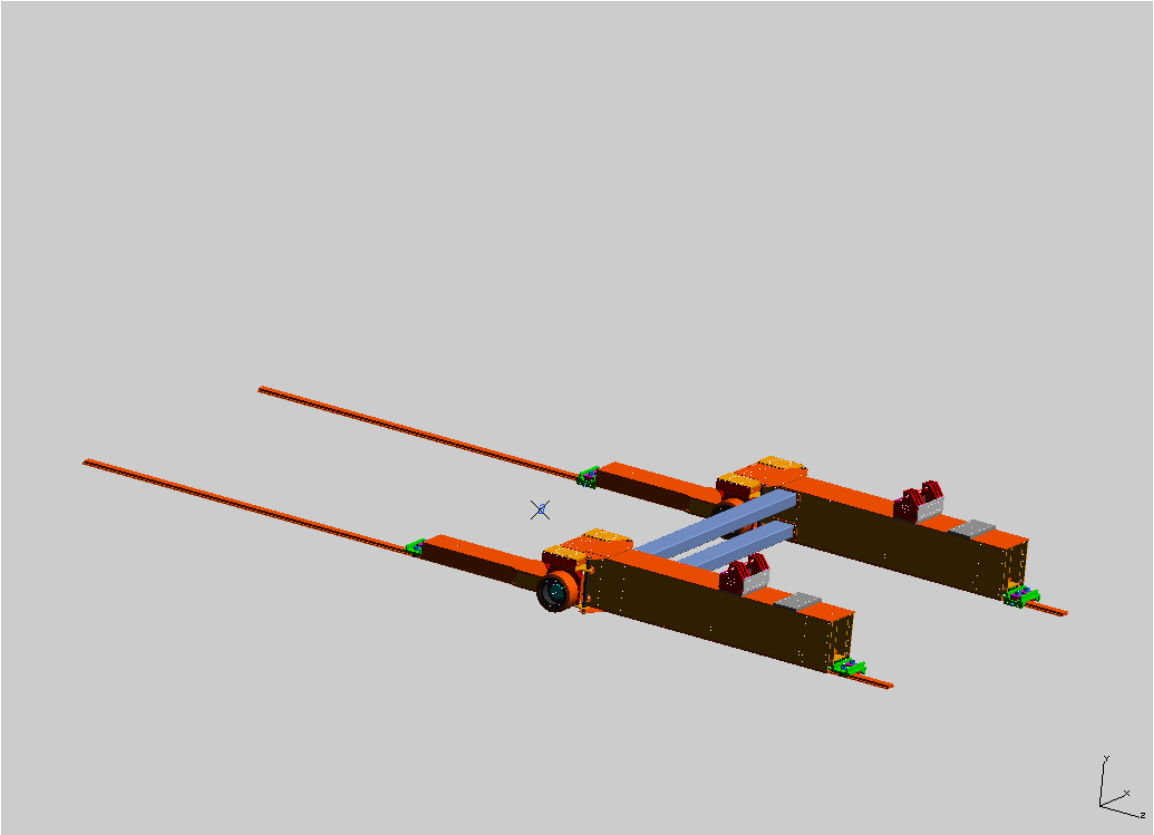

Rear Brackets weigh approximately 2000 pounds each and attach with twenty ¾-10 A325 Structural bolts.

2 inch thick (600 pounds) and 1 inch thick (300 pounds) steel shims are included under each rear bracket. See drawings 486949 and 486950.

Holes for shackles are included in each rear bracket. See 486884.

Anticipated effort to install both rear brackets and shims is less than one crew-day.

Step 4, Rear Counterweight

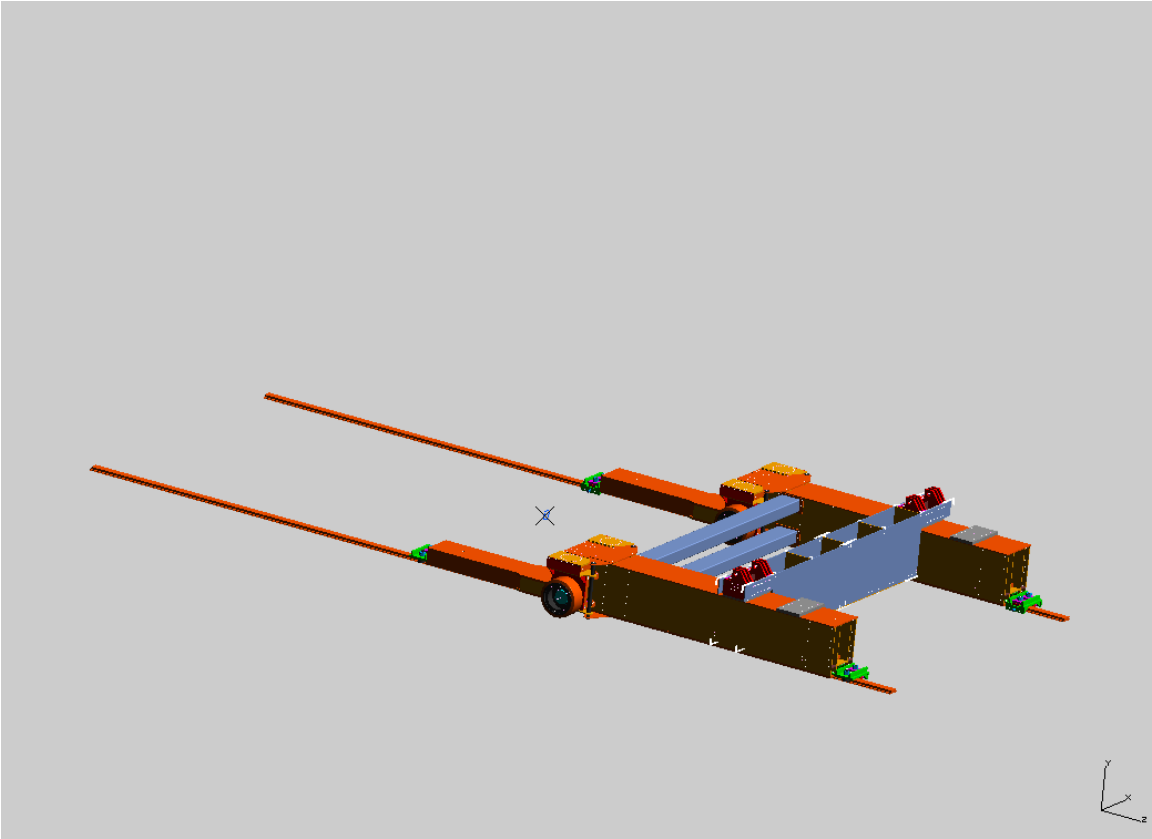

Forward Counter Weight weldment (dwg 486912) weighs 14,100 pounds, empty.

Holes for lifting hardware are included on each rear counterweight weldment.

Shims (0.250 inch thick) get installed between the counterweight weldment and the rear pin bracket.

Step 5, Next Two Rear Counterweights

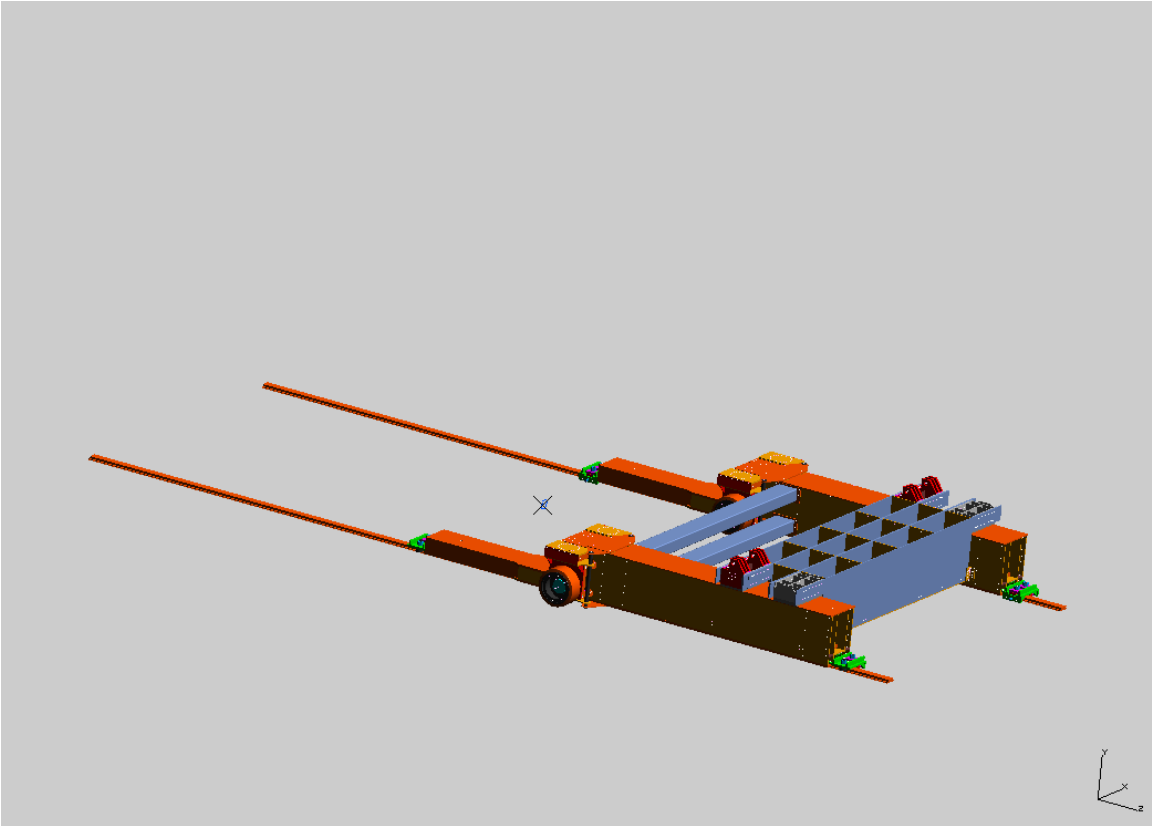

Middle and Rear Counter Weight weldment (dwg 486912) weighs 14,100 pounds, empty.

Holes for lifting hardware are included on each rear counterweight weldment.

Shims (0.250 inch thick) get installed between the counterweight weldment and the bracket rear.

Step 6, Install Drive and Pivot Cylinder Power Units

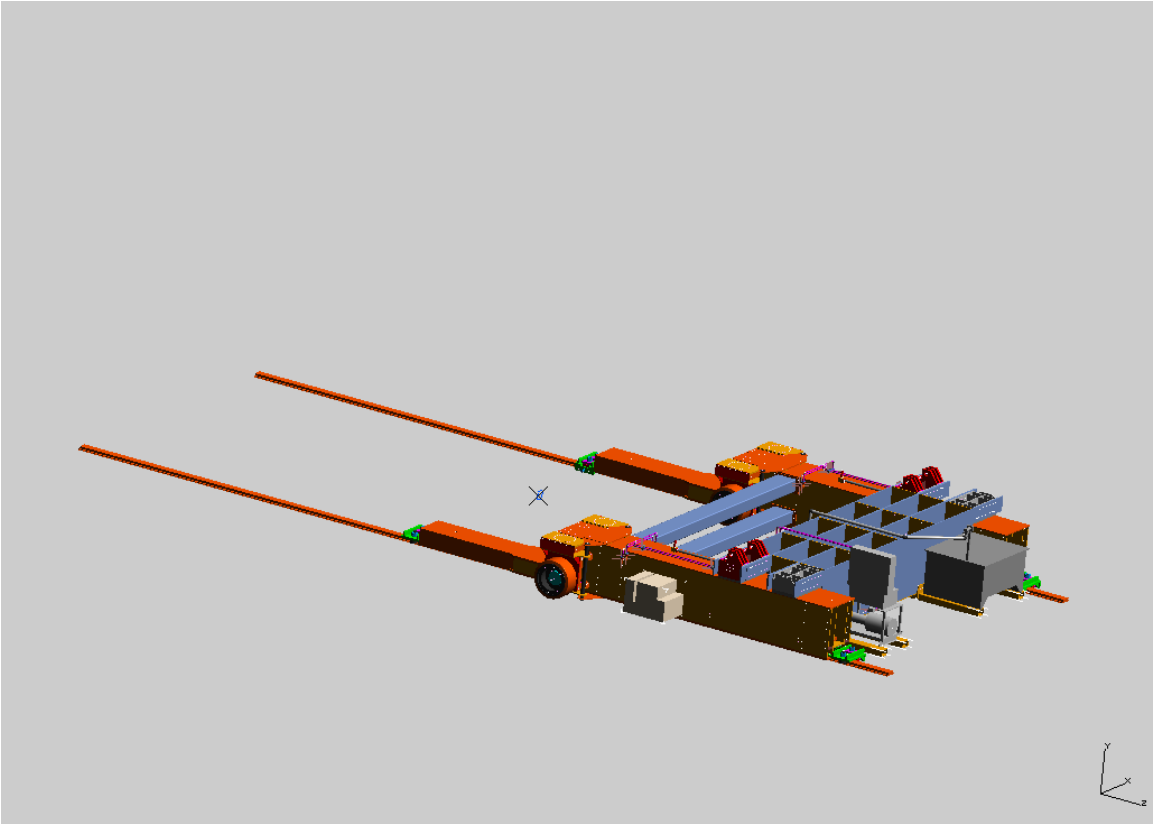

Three hydraulic power units are installed on the lower assembly:

1) Phelps 600 gallon hydraulic power unit with controls for the pivot cylinders.
2) CMA/ Flowdyne / Hydradyne 50 gallon power unit for the drive wheels
3) CMA/ Flowdyne / Hydradyne 10 gallon power unit for the kneeling cylinders.

All three units include controls and motor starters pre-wired to the motors. 480 VAC electrical connections to the cable reel can be made once the hydraulic power units are attached.

Estimate less than a week worth of electrician time to run the AC distribution on the pivoter lower portion. But, phase rotation checks need to occur after the hydraulic piping is completed and the units filled with hydraulic oil.

Pre-fabricated hydraulic piping (shown in drawing ME-486977) can be installed to connect the drive hydraulic power unit with the drive wheels (all of this hydraulic piping uses code 62 hydraulic flange connections. No field welding is needed.

Once the drive system hydraulic piping is installed and hoses connected to the wheel mounted hydraulic drive motors and the system filled with hydraulic oil, the 75 horsepower drive hydraulic power supply can have its rotation verified.

Once the drive system is filled, tested, and electrically powered, the entire lower portion of the assembly can be moved down the length of the hall and operation of the drive unit, lower frame rollers, cable reel, cam-follower guides, and rails can be tested. This should be performed with experienced Fermilab Staff.

At this point, the hydraulic piping for the pivot cylinders (drawing ME-489002) can be installed. Pivot cylinder piping is all connected with code 61 hydraulic flanges. No field welding is needed. Testing of the pivot cylinder hydraulic cannot occur until after the pivot cylinders are installed, connected hydraulically, and the cylinder rod ends connected to the table.

Step 7, Kneeling Cylinders

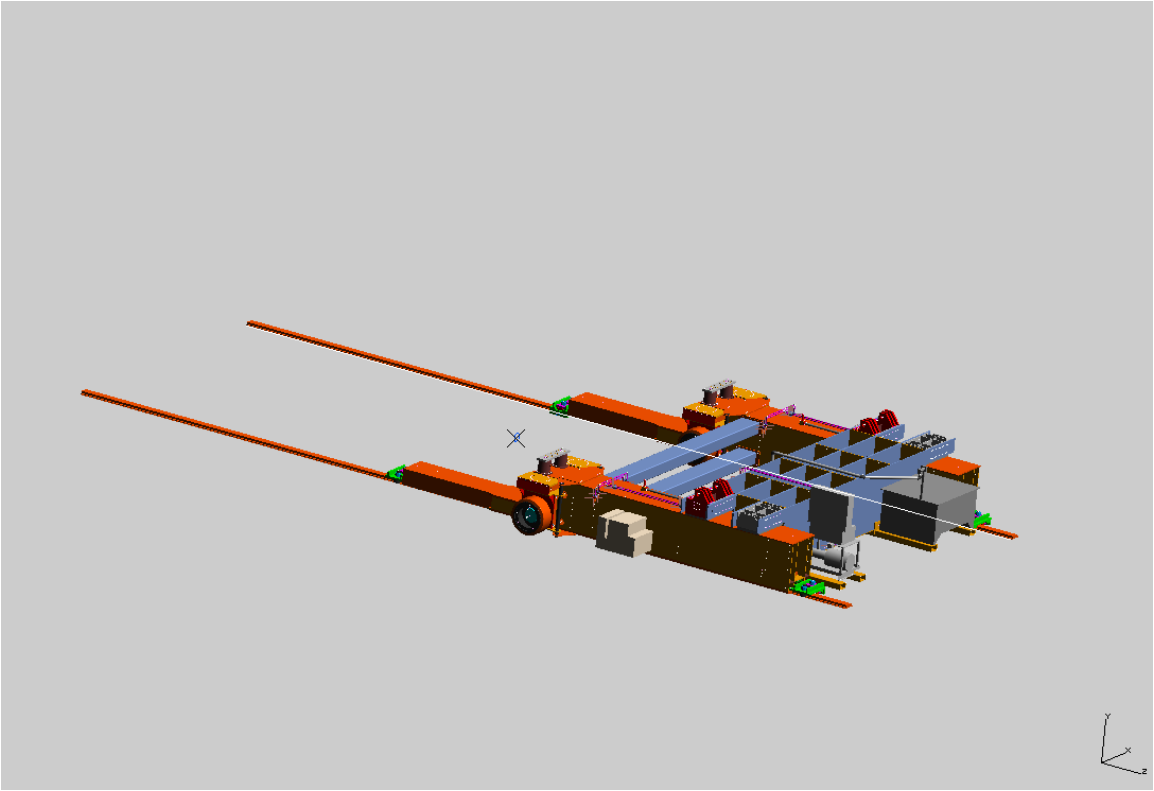

Four kneeling cylinders (each weighing about 250 pounds) each get bolted with ten ¾-10 socket head cap screws to the lower weldment.

Hydraulic hoses and spool valves get installed between the kneeling cylinders and the kneeling cylinder power unit.

Ground kneeling cylinder bracket lower plates (dwg 466679, weight is about 250 pounds) get placed on top of the kneeling cylinders and held on top of the rod with the port adapters (dwg 466685)

Estimated effort to install these items is approximately one crew-day.

Step 8, Upper Weldment

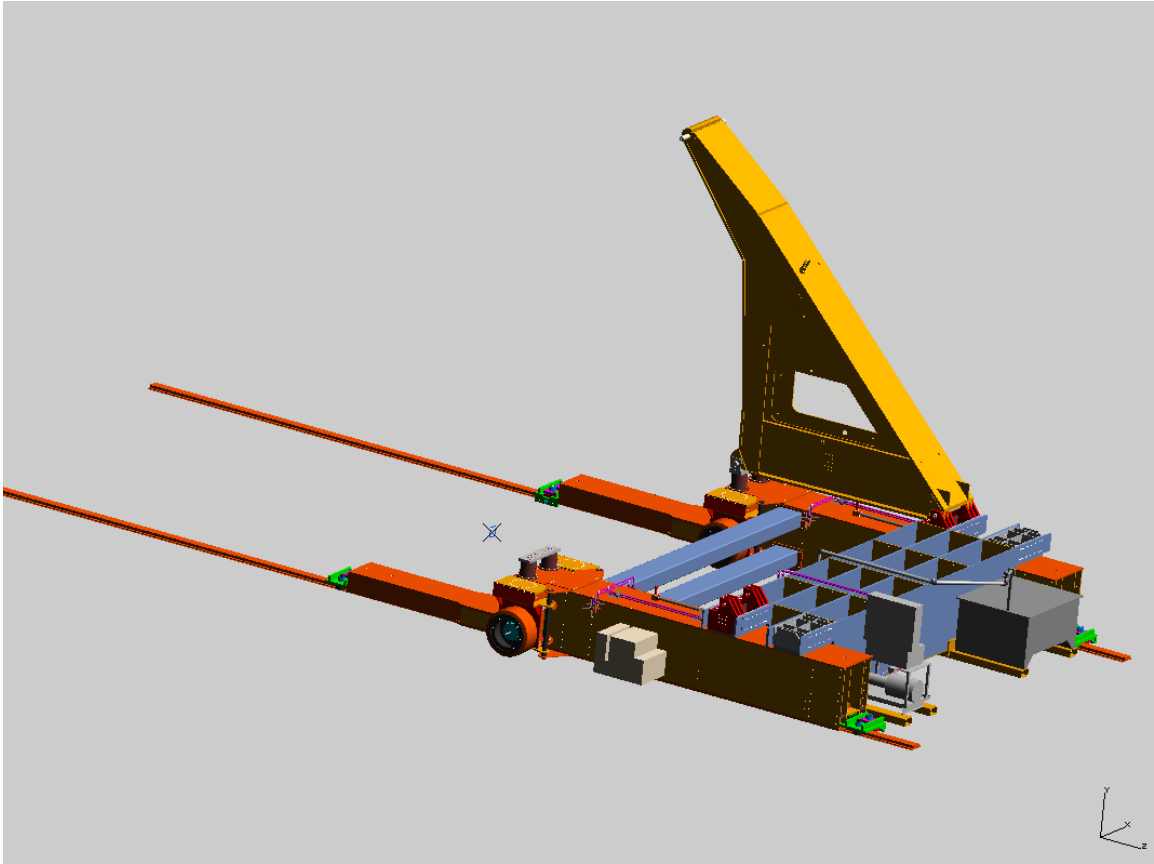

Upper weldment weighs 36, 275 pounds and is shown in drawing 486361.

Both 10 ton cranes will need to operate in tandem to lift the upper frame off the truck, transfer to the assembly area, rotate from horizontal to vertical, and lift and place on the lower frame.

Once the upper frame is vertical, the Kneeling Cylinder Pivot Bracket Weldment (drawing 466684, weight is about 400 pounds) gets pinned with the forward pivot pin (4 inch diameter, 48 inch long, drawing 466592, 176 pounds).

Kneeling Cylinders and brackets are shown assembled in drawing 466655.

Estimate less than 2 crew-days of effort to off load and set each upper weldment on the lower weldment assembly.

Step 9, Pivot Cylinder

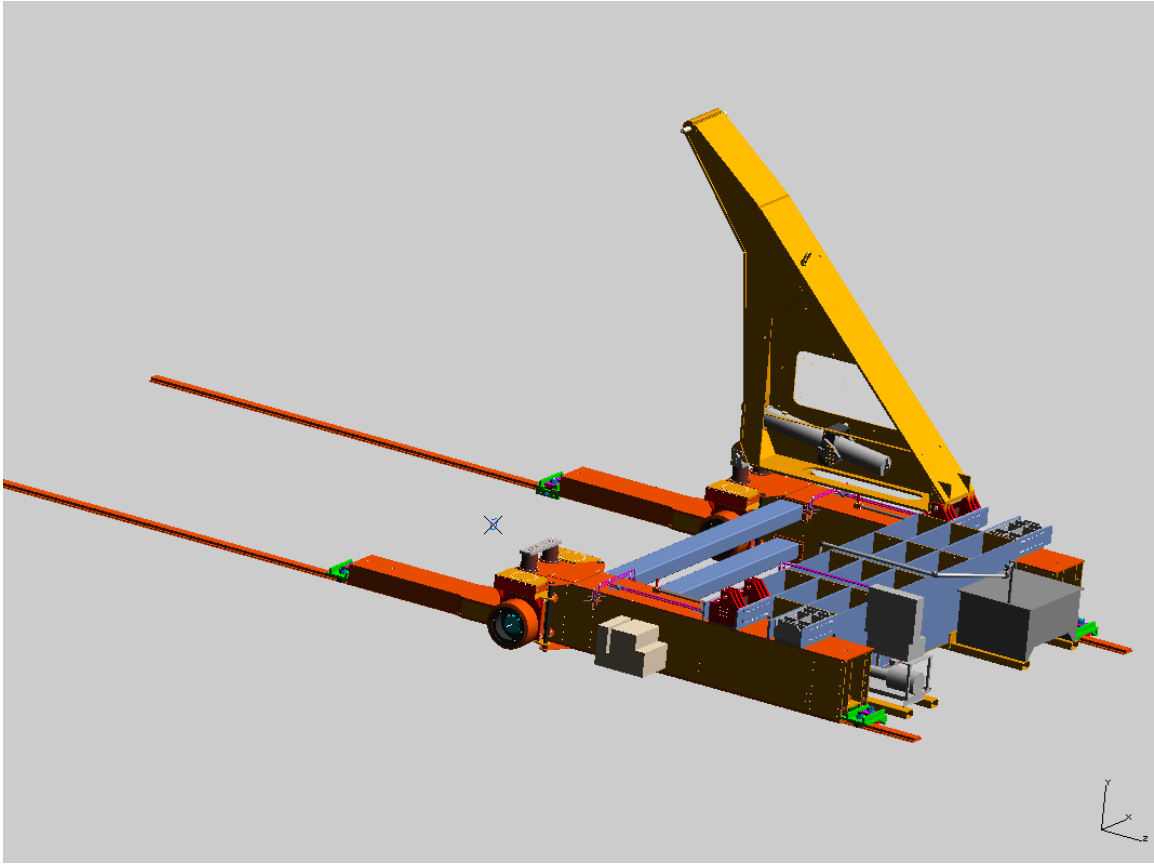

Each pivot cylinder weighs approximately 3514 pounds and gets mounted in a trunnion (approximate weight is 500 pounds). The trunnion gets set into trunnion supports bolted (with thirteen ¾-10 A 325 structural bolts) to the web of the upper weldment. Long ¾ inch bolts trap the trunnion into the trunnion supports (one on each side) and similar bolts trap the cylinder into the trunnion (again, one bolt on each side).

Cylinder enters the upper weldment thru the vertical opening in the forward vertical surface of the upper weldment. Cylinder is orientated with the oil port on the upper surface of the barrel (the non-moving portion of the cylinder).

Less than one crew day was needed for installed each pivot cylinder into each upper weldment in the FHEP pivoter in CDF.

Step 10; Second Upper Weldment and Pivot Cylinder

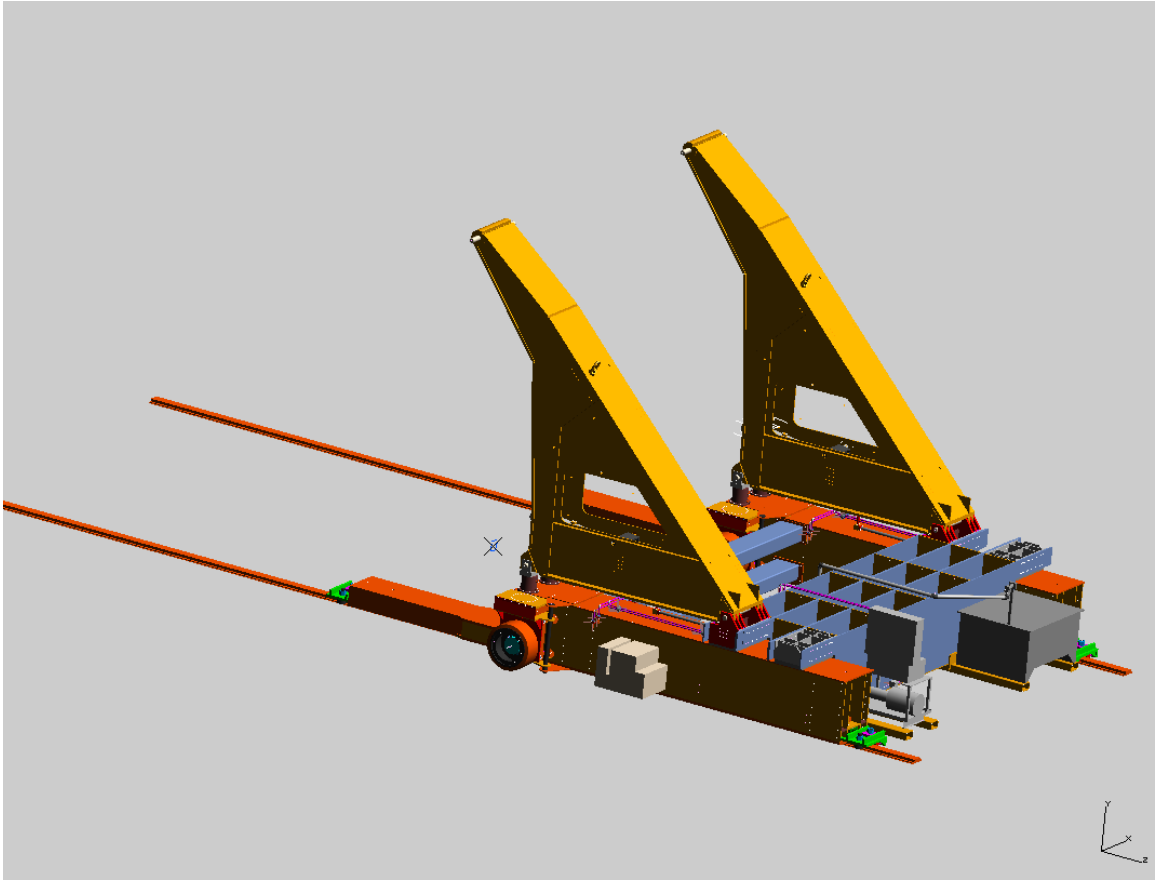

Steps 8 and 9 above are duplicated to accomplish step 10.

Hydraulic hoses are installed between the pivot cylinders and the pivot cylinder hydraulic power unit.

Kneeling cylinder hydraulic displacement sensors installed, hydraulic hoses connected, cabling connected, and the system filled with hydraulic oil, motor rotation verified, and system can be tested.

Step 11; First Table Segment

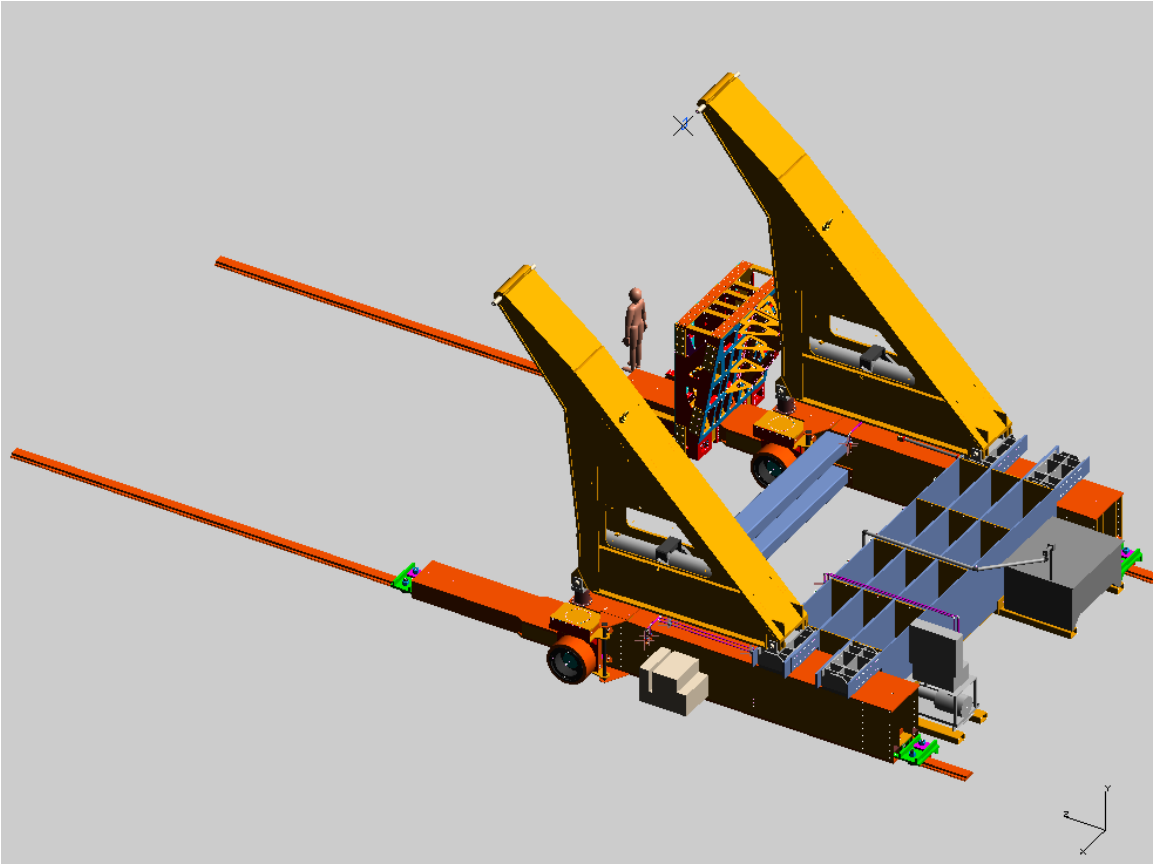

Step 12, Second Table Segment;

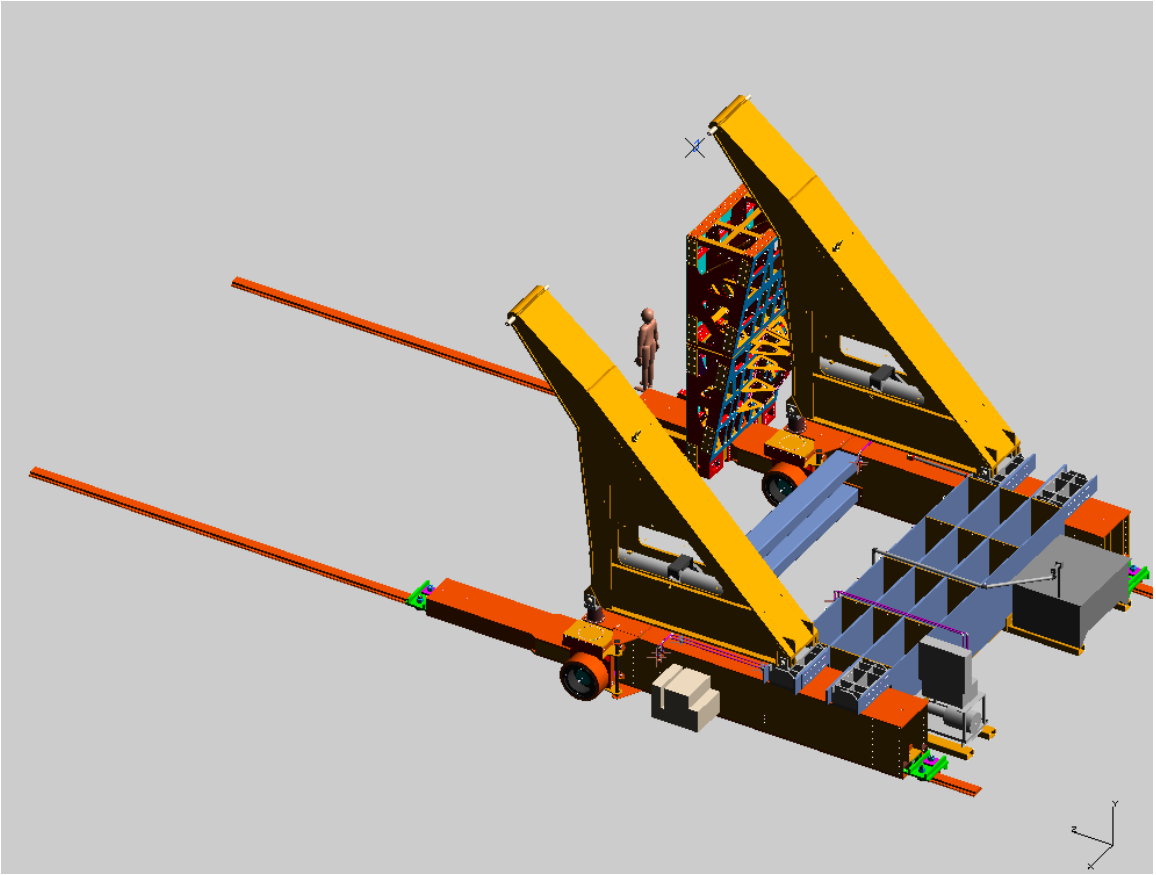

Step 13, Pivot Segment

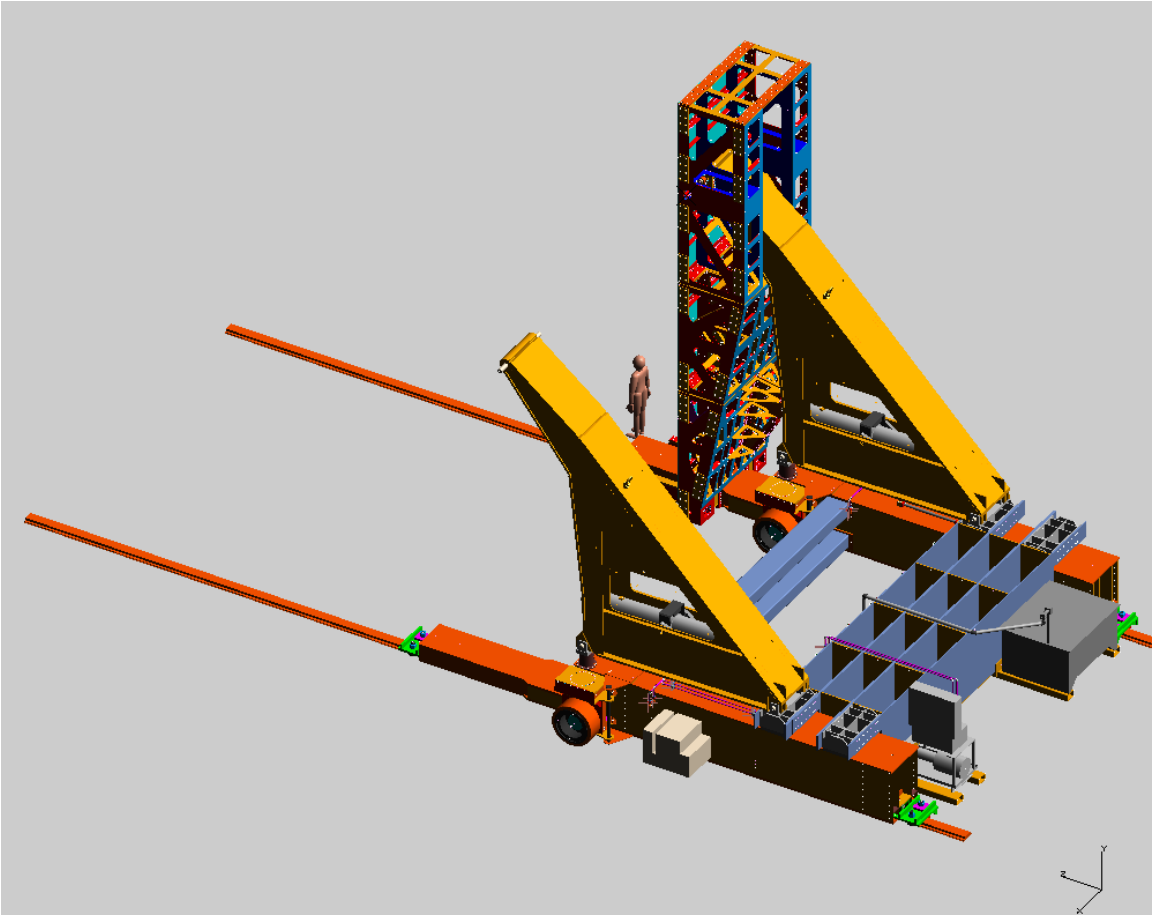

Step 14, Repeat Steps 11, 12, and 13 for second Side

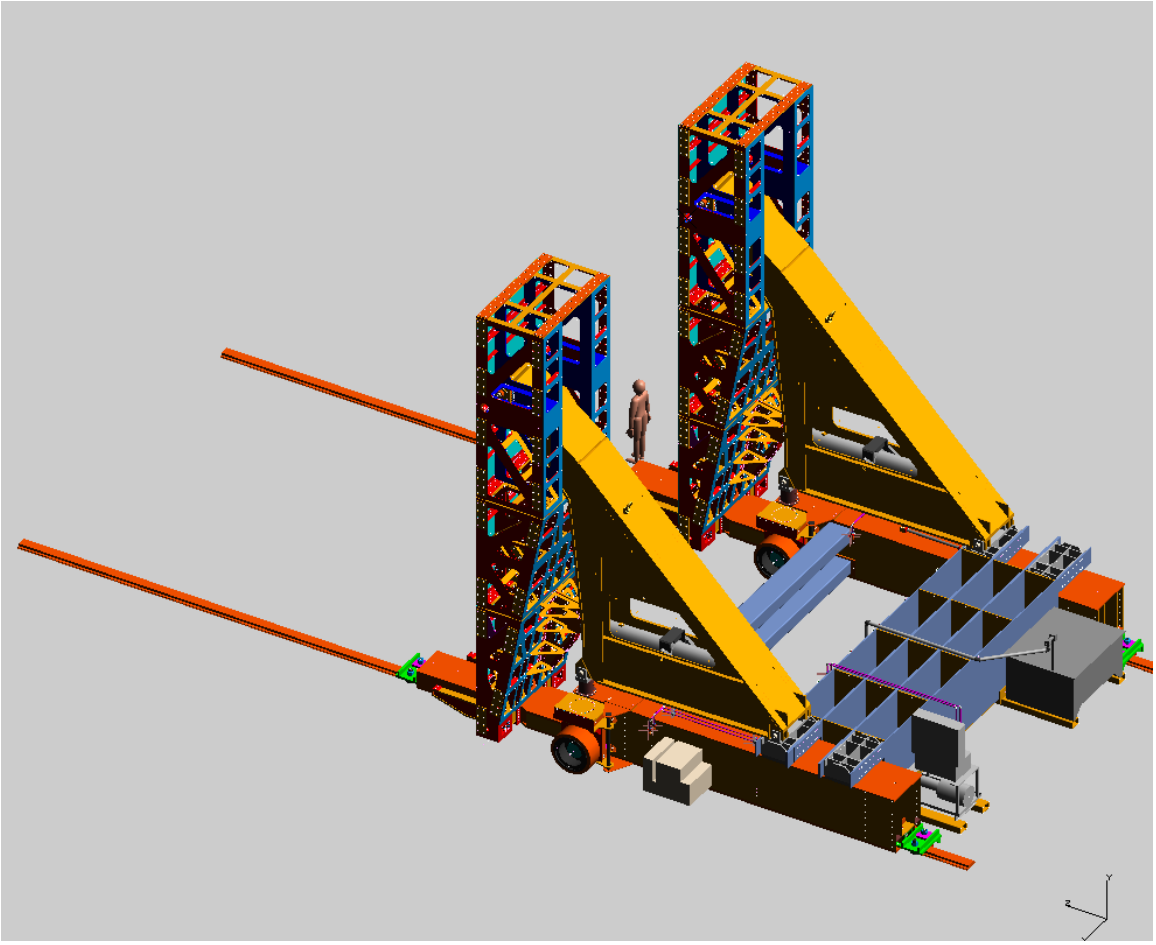

Step 15, Middle bottom Sections added

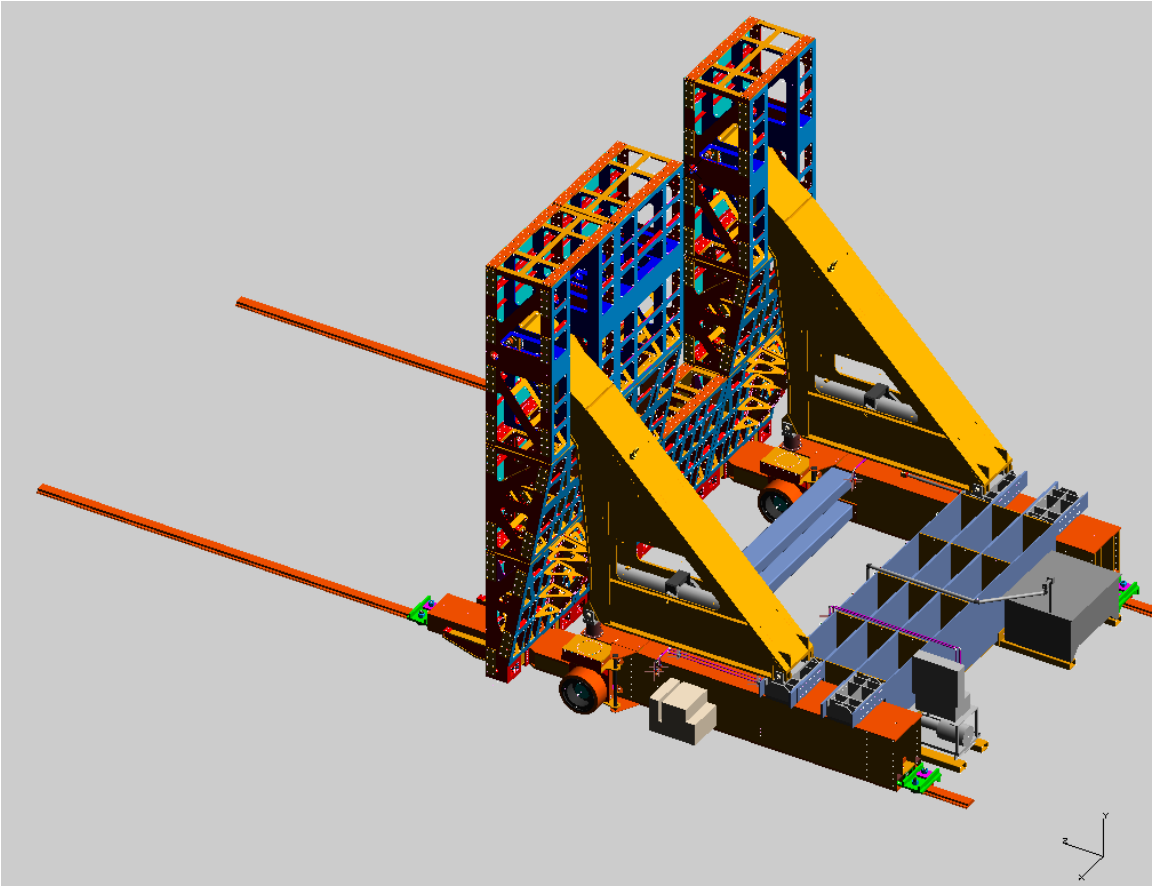

Step 16, Complete Middle

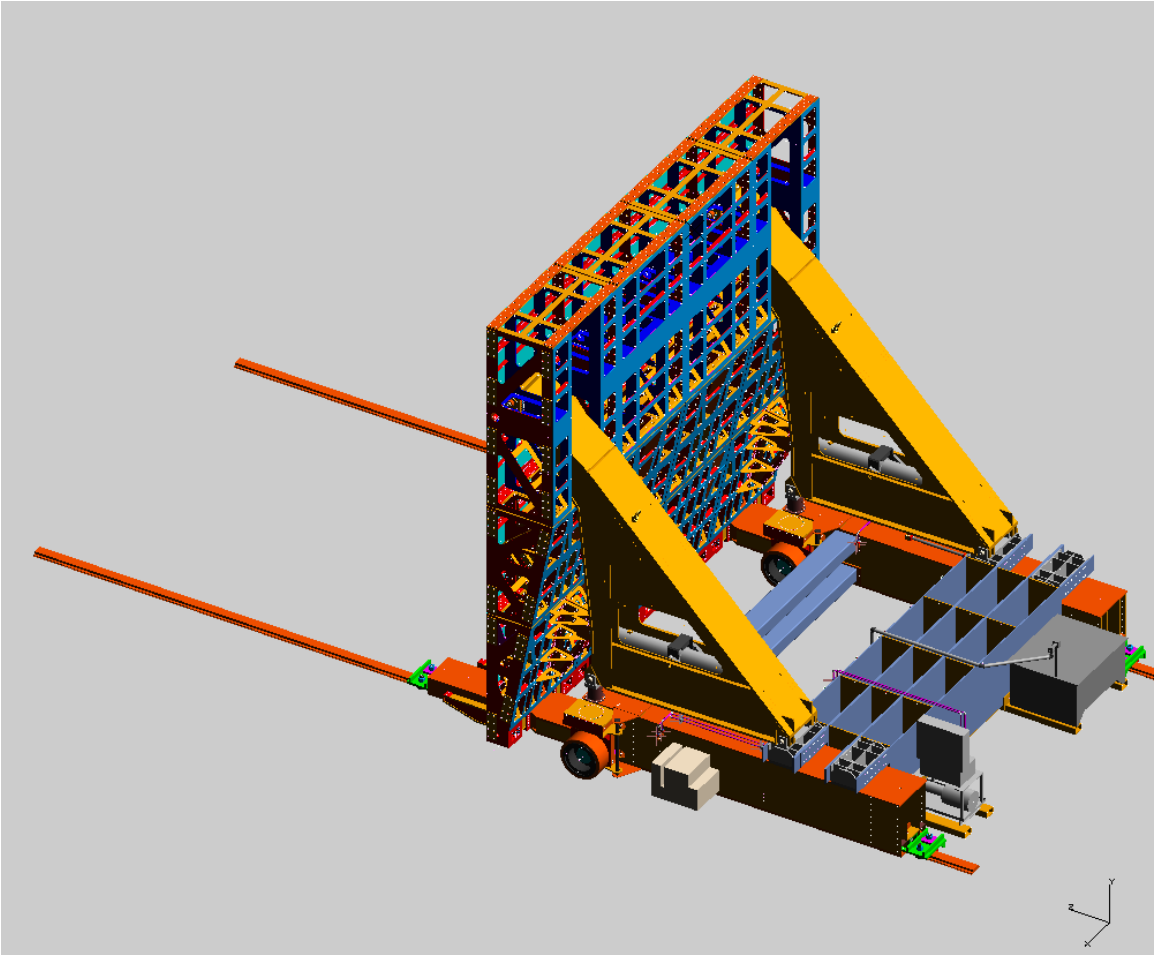

Step 17, Side Bottom Segments

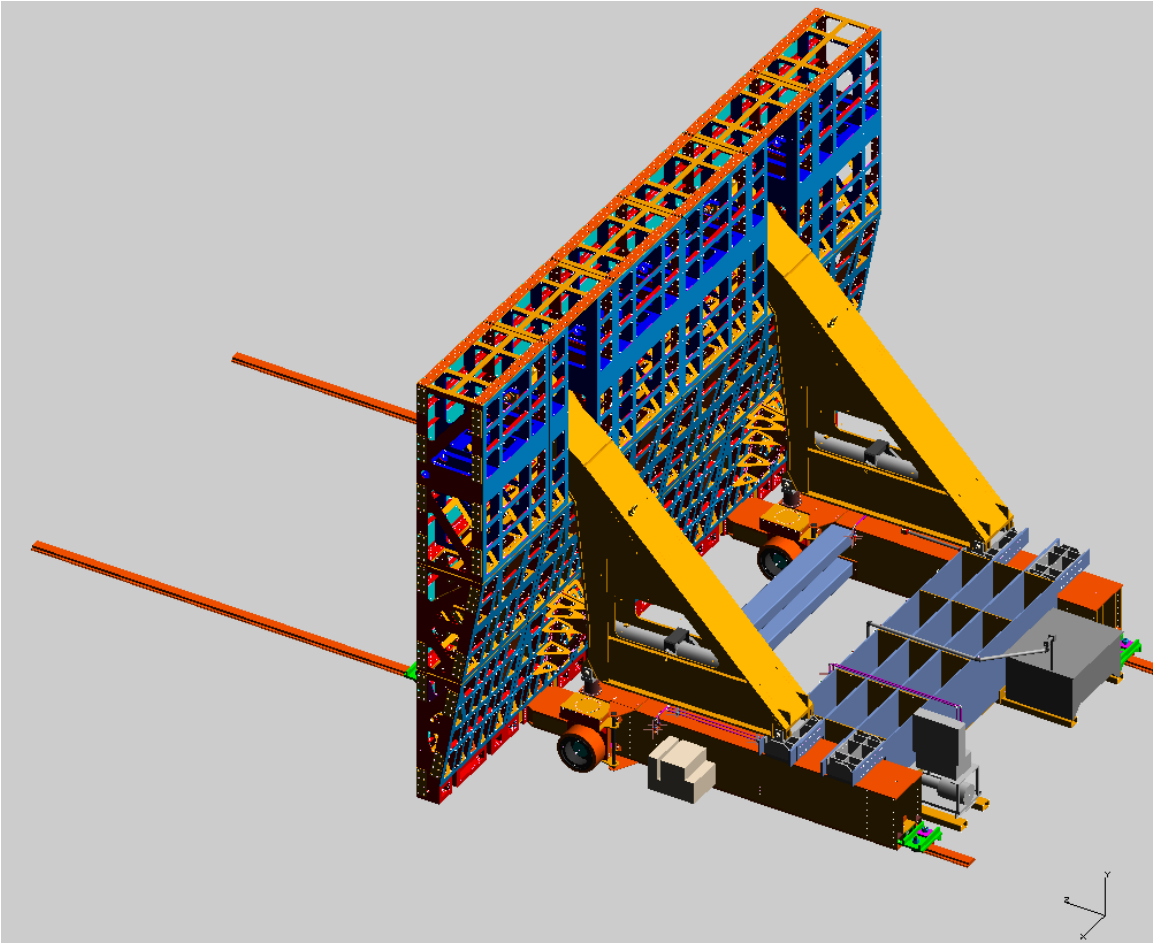

Step 18, Upper Sections

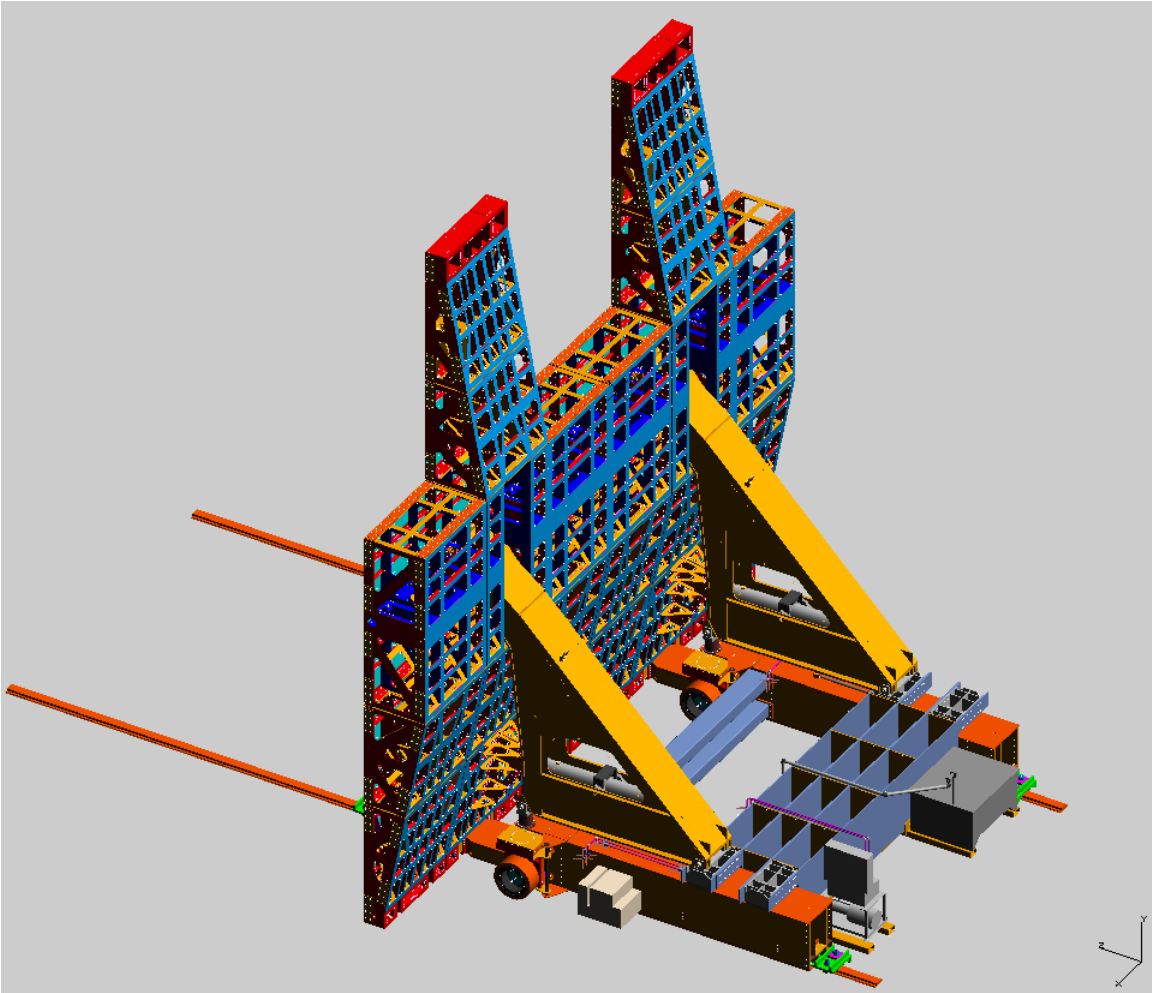

Step 19, More Upper Sections

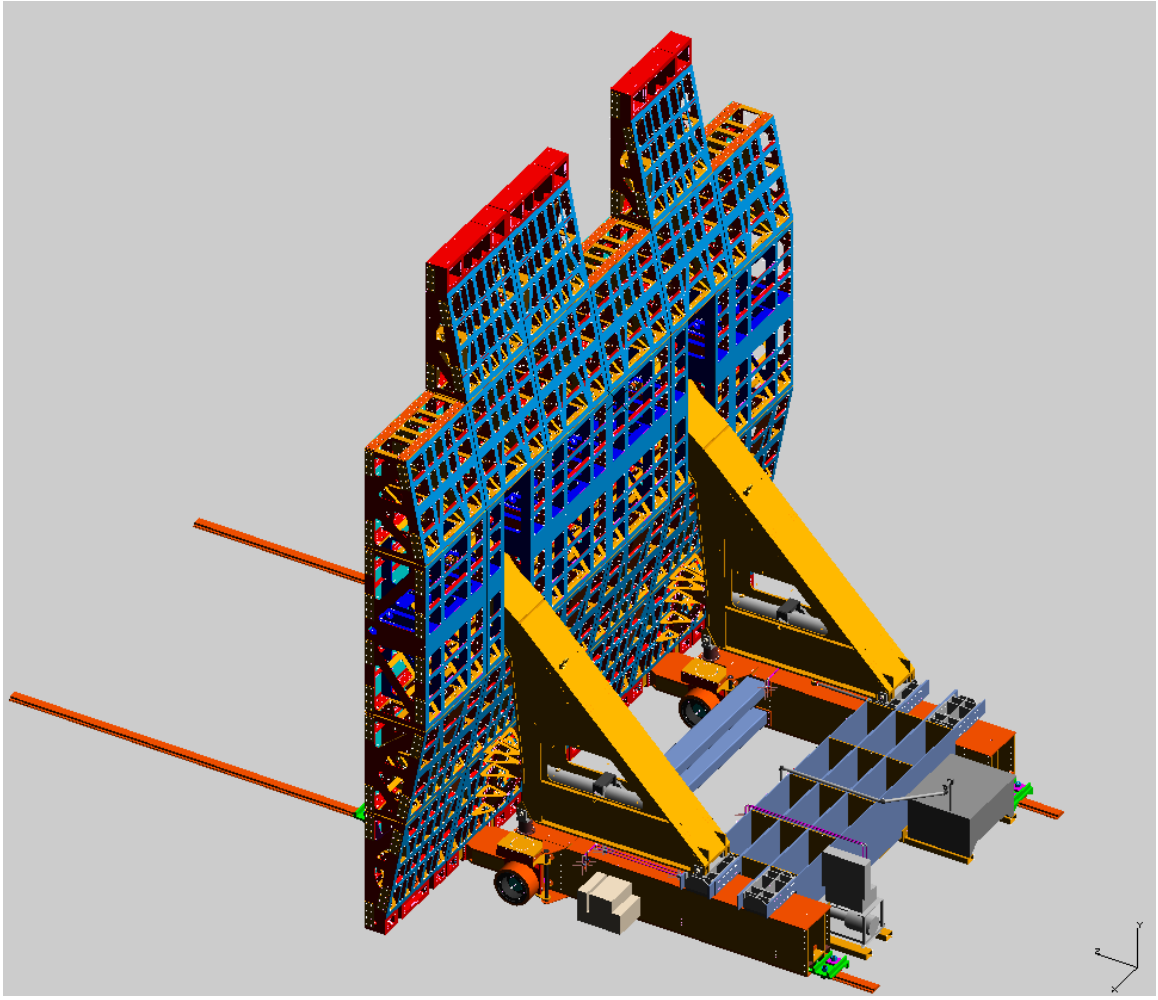

Step 20, Complete Table

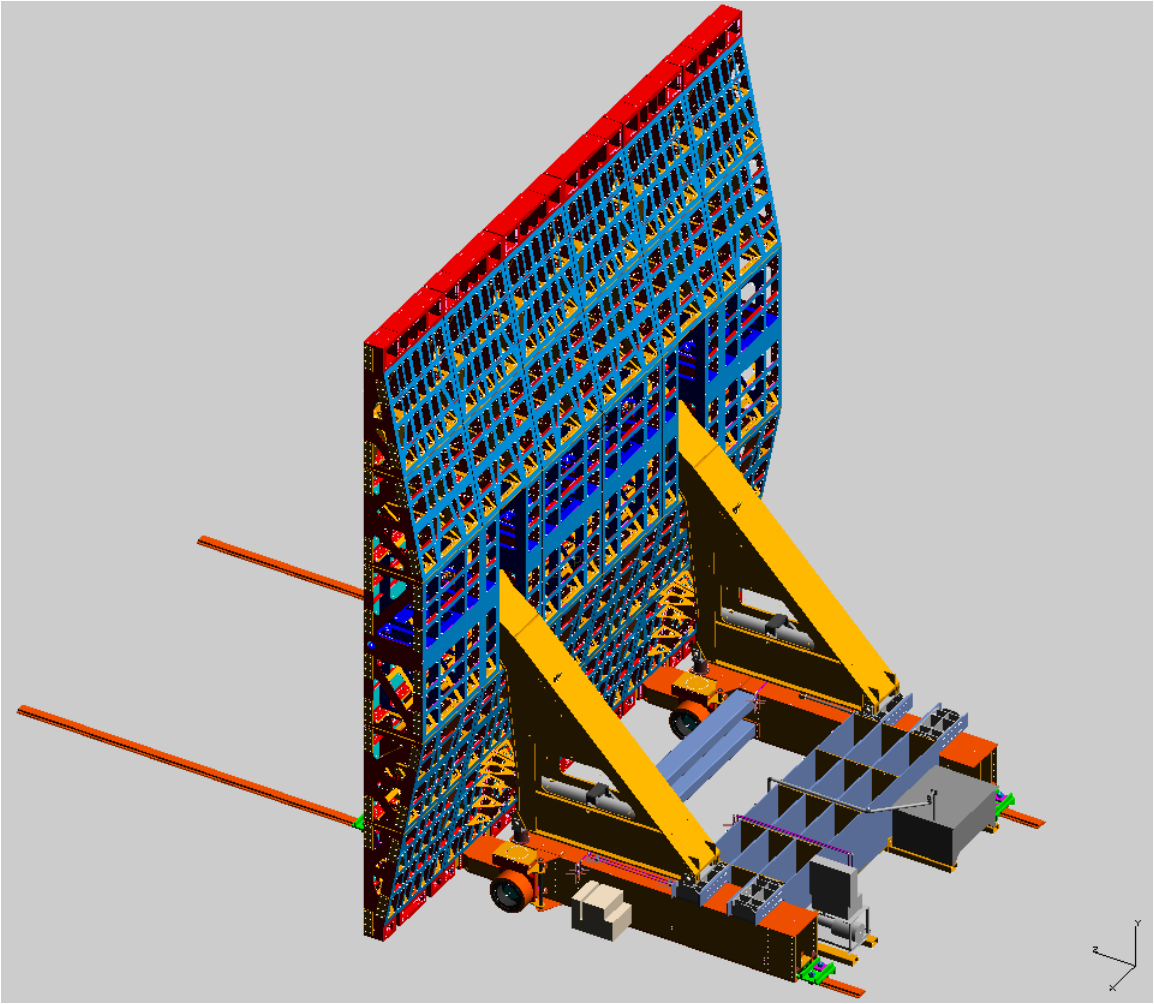

FNAL Assembly Task List Prior to shipping pivoter components to Ash River:

Lower Weldments:

1) Mount three Hilman rollers to the bottom of each lower weldment.
2) Mount revised rear bracket (Bracket_Rear_4) to the back of the frame which will require the drilling and tapping of sixteen ¾-10 holes to the top plate of each lower weldment.
3) Mount the air spring and its top plate to the lower weldment.
4) Assemble hydraulic drive motors and the drive wheels to the drive weldment.
5) Mount the drive weldments to the lower frames.
6) Mount the kneeling cylinders to the lower frames.
7) Verify the forward cross ties bolt to the tapped holes in the lower frame (chase the threads as needed, verify bolt holes line up, put the bolts into the tapped holes prior to shipping).
8) Verify the tapped holes for the lifting eyes are clean the swivel eyes thread in satisfactorily.
9) Add a support bracket to one of the lower weldments to support the kneeling cylinder hydraulic power supply unit. Copy design from the FHEP unit at CDF.
10) Assemble and mount the cam-followers to the front and rear of the lower weldment.
11) Paint the weldment some Fermilab tractor color (orange?). Use a roller.

Upper Weldments:

1) Verify the main pivot pin can enter the upper weldment top hole.
2) Mount revised rear bracket (Bracket_Rear_4) to the back of the upper frame and verify the pin inserts thru both weldments correctly.
3) Drill twenty-six 13/16 inch diameter holes on each upper weldment and mount the revised cylinder trunnion support plate on each side of the webs.
4) Mount the kneeling cylinder bracket and pin to the forward hole in each upper weldment and verify the pin inserts thru both weldments correctly.
5) Paint the weldment some Fermilab tractor color (yellow?). Use a roller.

6) Install the lifting fixture to each upper weldment. Load test. Number the fixtures (as required by FESHM 5022), and paint.

Forward Cross Ties:

1) Verify the forward cross ties bolt to the tapped holes in the lower frame (chase the threads as needed, verify bolt holes line up.
2) Paint the weldment some Fermilab tractor color (blue?). Use a roller.

Rear Counterweight Weldments:

1) Verify the counterweight weldments lower angle bolt to the tapped holes in the lower frame for the forward and rear weldments.
2) Verify the forward counterweight weldment bolts to the revised rear bracket (Bracket_Rear_4).
3) Verify rearward counterweight weldment bolts to the original rear bracket.
4) Paint the weldment some Fermilab tractor color (blue?). Use a roller.
5) Verify the box sections used to support the two hydraulic power units (the pivot cylinder hydraulic power unit and the hydraulic drive power unit) mount to the rear counterweigh weldment.

Hydraulic Pivot Cylinders:

1) Test fit each hydraulic pivot cylinder into the trunnion.
2) Test fit each trunnion into the upper weldment trunnion mount.
3) Fabricate the piping weldments for the pivot cylinder hydraulic piping
4) Clean, dry and install shipping covers on each segment of the piping weldments for the pivot cylinder hydraulic piping.
5) Test fit the pivot cylinder hydraulic power unit supporting beams onto the Rear Counterweight Weldments and test fit the pivot cylinder hydraulic power onto these beams. Add appropriate bolt holes to attach the pivot cylinder hydraulic power to the support beams.
6) Paint the pivot cylinder hydraulic power unit supporting beams some tractor color (orange?).

Hydraulic Drive:

1) Fabricate the piping weldments for the hydraulic drive piping.

2) Clean, dry and install shipping covers on each segment of the piping weldments for the hydraulic drive piping.
3) Test fit the hydraulic drive power unit supporting beams onto the Rear Counterweight Weldments and test fit the hydraulic drive power onto these beams. Add appropriate bolt holes to attach the hydraulic drive power to the support beams.
4) Paint the pivot cylinder hydraulic power unit supporting beams some tractor color (orange?).

Kneeling Cylinder Hydraulic Power Unit:

1) Test fit the kneeling cylinder hydraulic power unit to fabricated supporting beams onto one lower weldment.
2) Test fit the kneeling cylinder hydraulic power unit onto this support. Add appropriate bolt holes to attach the kneeling cylinder hydraulic power unit to the support.
3) Paint the kneeling cylinder hydraulic power unit support some tractor color (orange?).

Counter Weights:

1) Identify counterweight materials from the railhead (maybe the blue blocks), flame cut as needed to fit in the counterweight weldments and remain under 10 tons, paint and ship to Ash River.