#Nova-doc-5650-v1

An Updated Structural Calculation for the lower Weldment of Pivoter table

Ang Lee

Feb 21, 2011

Introduction

This analysis is an updated calculation from the previous one (Nova-doc-4416, Dec 16, 2009). The updated version includes the loading increase on both forward and rear pin by 25%. It is due to a heavier extrusion and table (see reference 2 by D.Pushka) . Two FEA models have been used. First model is to set P(rear pin)=0 because of the cancellation effect of a counter weight. The contact element is inserted where the roller is. The second model is to apply both P (Forward pin) and P (rear pin) as shown in Fig 2. The constraints on the roller area will be set as vertical Y=0 such that a pulling effect can be obtained as an actual counter weight applied. The worst number is used for the stress evaluation. Material is A36 with an allowable of 21.6 ksi.

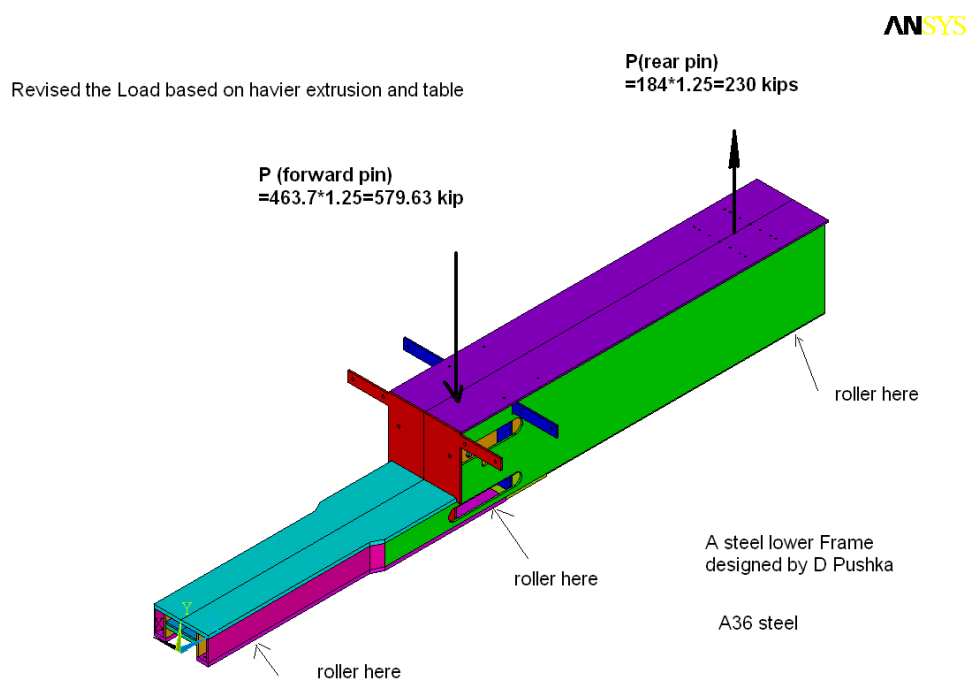

Fig 1 The lower frame structure and Load

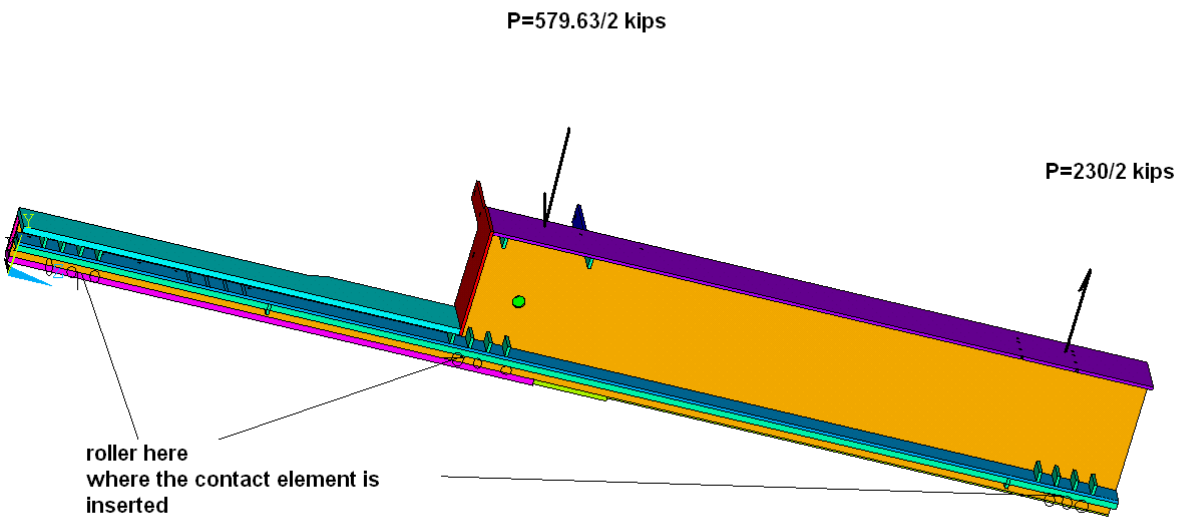

Fig 2 FEA model (half structure is needed)

Result and Discussion

a) Structural Member stress

The calculation result is summarized in Table 1

Table 1 Stress Result for the Revised load

Component	#1	#2	#3	#4	#5	#6	#7	#8	#9	#10	#11
Max stress (ksi)	7.7	15.1	20	10.4	0.6	30/24*	14.9	2.8	5.8	9.6	9.5

*Note: The stress (30 ksi) of part#6 is mostly in compression (bearing type) due the forward pin just sitting directly above it. The bending stress is around 24 ksi at the bottom, which is about 11% higher than allowable. It is considered to be acceptable. Besides that, the stress on part #7 is still very low ~15 ksi. In the reality, these two plates will share the load each other rather than the one in the model which holds the load individually.

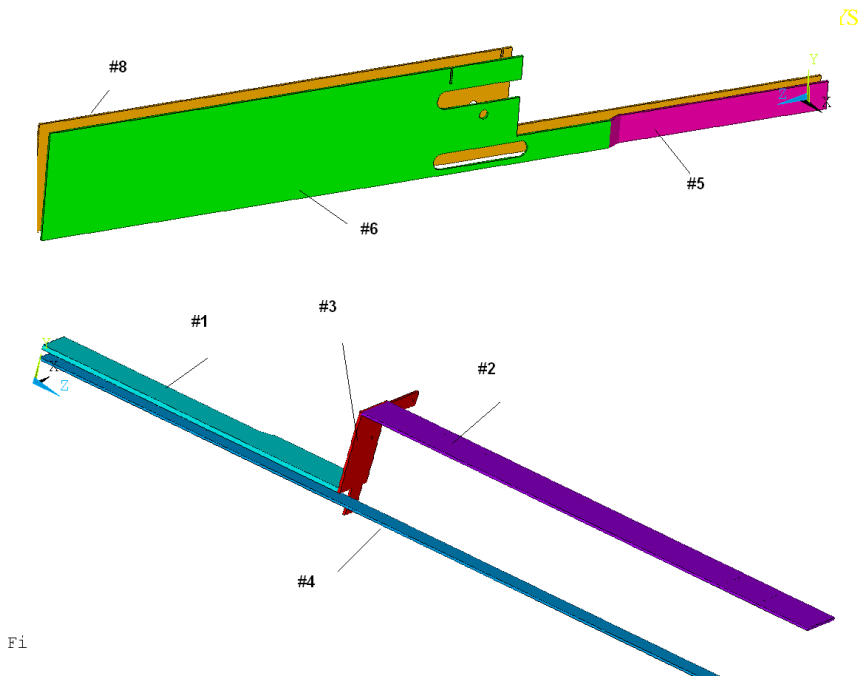

Fig 3a Parts numbering

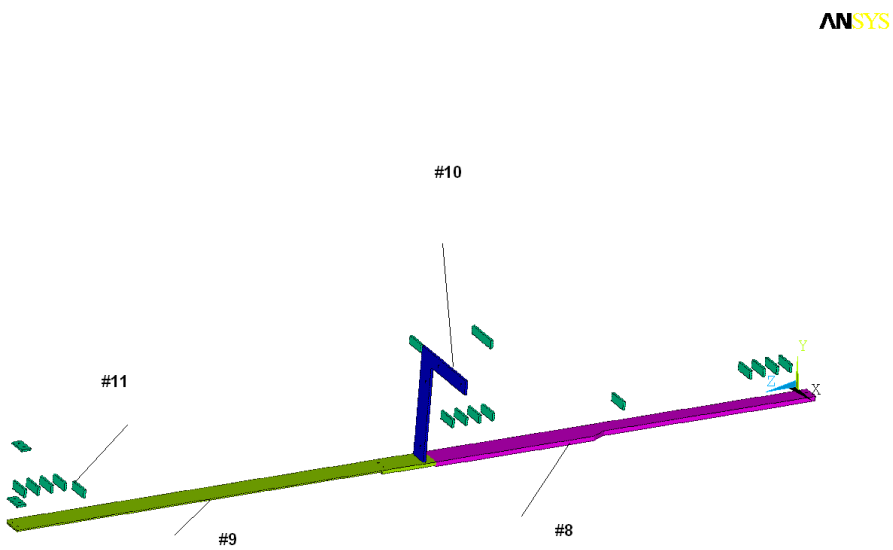

Fig 3b Parts numbering

b) <u>Weld stress</u>

By looking on the load pass, there are 3 critical locations as shown Fig 4. For location 1, the majority of the load from the forward pin will be passing through the web (#6 and #7) & horizontal plate (#4) to the roller. Therefore, the weld has to be good there. For location 2, the local weld needs to be stronger enough against the pulling force. For location 3, the shear stress of weld needs to be checked since it has a least cross section area.

With a fillet weld of 5/16, the shear allowable will be 0.3*70 =21 ksi. It gives an allowable shear force/in

Shear force/inch=21ksi*0.707*5/16=4639 lbf/in

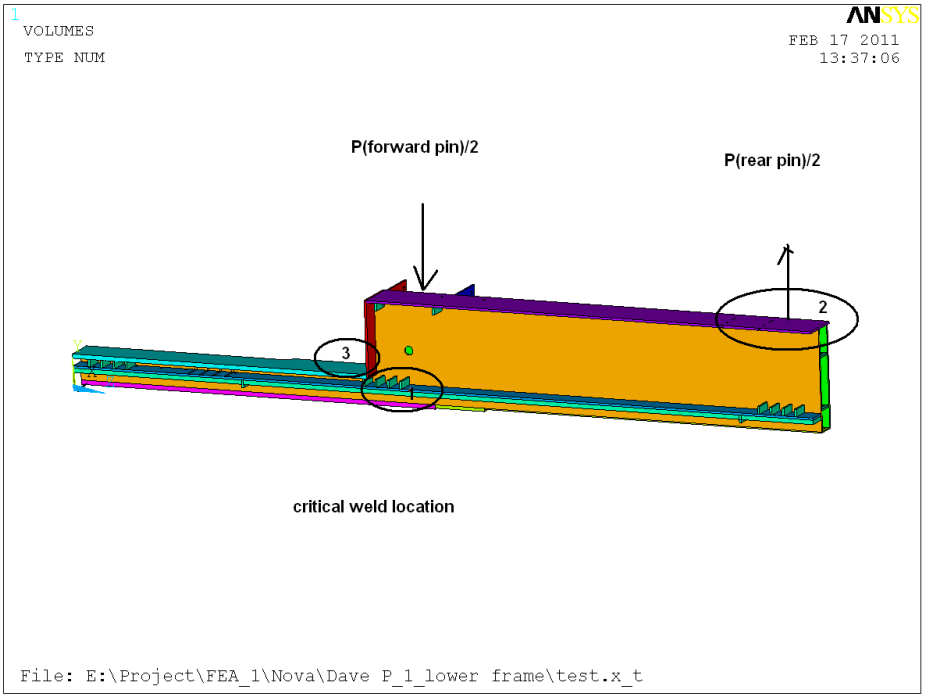

Fig 4 Critical Weld Location

Weld stress at location 1

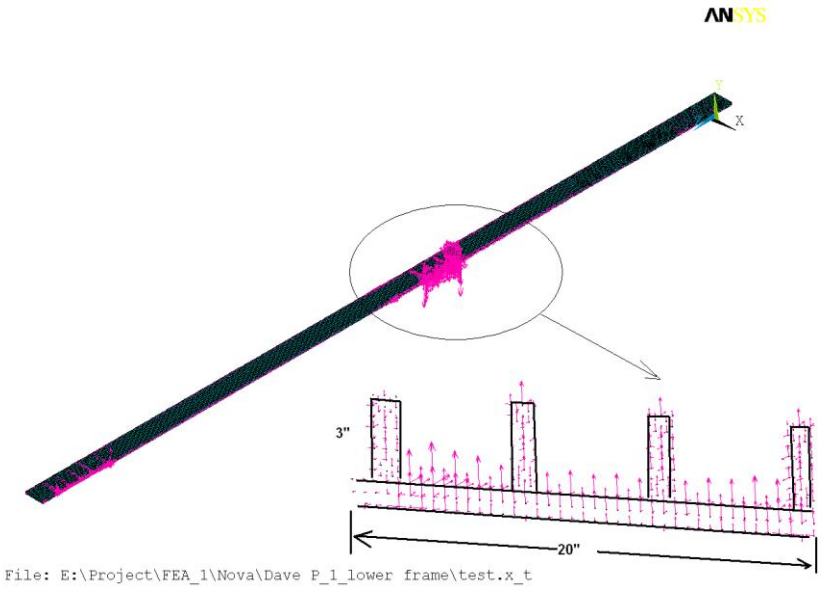

Fig 5 Weld stress evaluation at the location 1

FX = 15232.27 ; FY = 182646.1; FZ = 1405.032
Therefore, Ftot=(Fy^2+Fz^2)^0.5=182651 lbf
Weld length Lw per drawing , Lw=3”*8+20”*2*(2/8_skip weld)=34 inch
Force/in=Ftot/34=5372 lbf/in > 4639 lbf/inch---→ NOT GOOD
Try for 4-8 skip weld: Lw=44 inch and Force/inch=4151 < 4639 lbf/in
****Suggest change to 4-8 skip weld as minimum or continues weld round that section at location 1and it must be double side.***

Weld stress at location 2

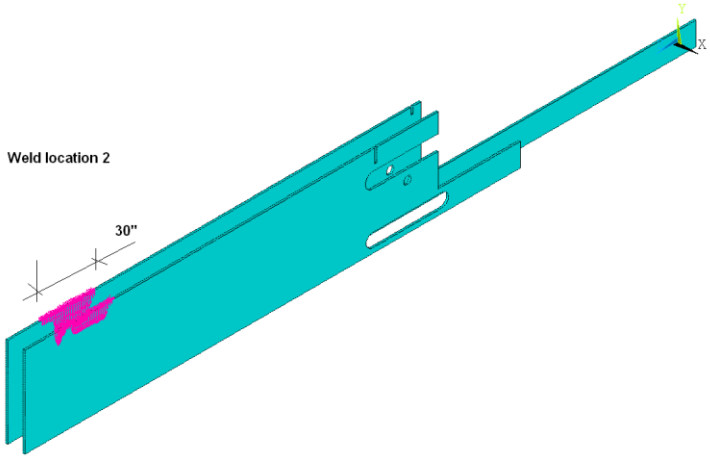

Fig 6 Weld stress evaluation at location 2 (rear pin area)

The force is mostly concentrated at the end, ~30” length. By using a most conservative approach, local weld force will be same a P (rear pin)/2. It results a Ftotal= 184*1.25/2=115 kips over 30 length (FEA give 114 kip _very closed). The Weld length (per drawing) is 2-6 skip weld and single side

Lw=30”*2 (_2 plates, single side/per drawing)*2/6(skip weld)=20”.

The force/inch=115 kip/20 in=5759 lbf/in>4639 lbf/in -→ NOT GOOD/per drawing

Try for a continues weld, then Lw=30*2=60 inch.The force/inch=1916 lbf/in <4639 lbf/inch

Suggest change to continues weld at that weld location 2 at least for 30” length

Weld stress at location 3

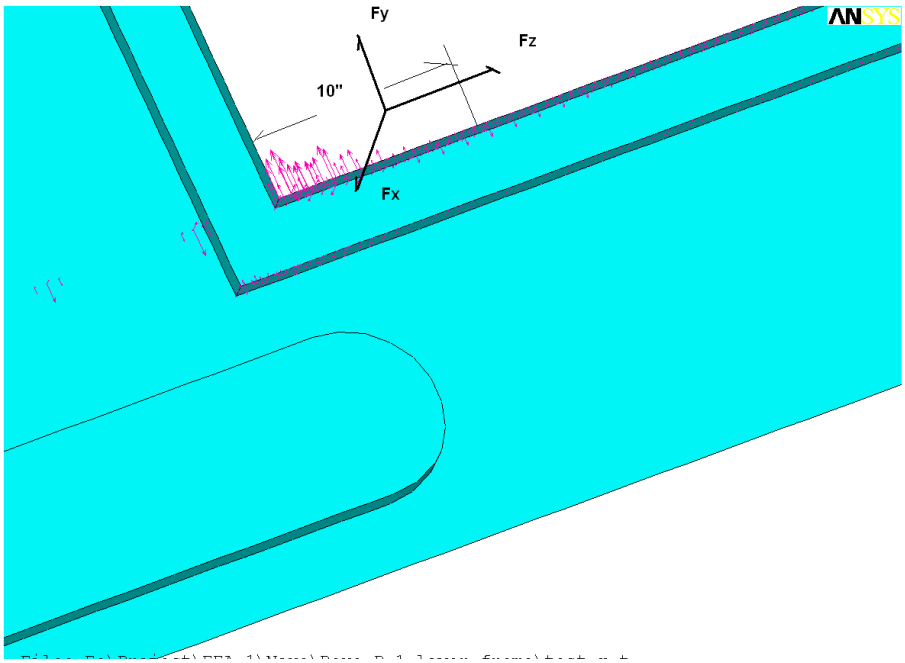

Fig 7 Weld stress evaluation at location 3

From FEA , the node force summation over 10”,

Fx=6354, Fy=20349,Fz=3652. 6The vector summation of force Ftot= 21628 lbf. The weld length, per drawing, is 10”*2 side=20 inch

Force/inch=21618/20=1081 lbf/in < 4639 lbf/in --→ OK!

***However, the thicker plate is 2”. The minimum filled weld should be 3/8”. It is recommended to check all weld to insure the min size to satisfy the welding code*.**

Conclusion

The structure member seems adequate for a given load. Three minor weld modifications are needed as stated above. With a 25% load increase, the earlier analysis of buckling is still valid since it gave SF=68.

Reference

1) Ang Lee,"A Stress Calculation for the Steel Lower Frame used in Nova Pivoter Table Assembly", Nova-doc-4416-v1, Dec 16,2009
2) Dave Pushka," Evaluation of Design for Heavier Modules",MD-EBG-304, Jan 19, 2011
3) PPD_Weld Drawing," Nova-block-position support table frame lower weldment 2",# 3929.220-ME-466518, Jan 13,2010

Appendix

Stress plot from Ansys

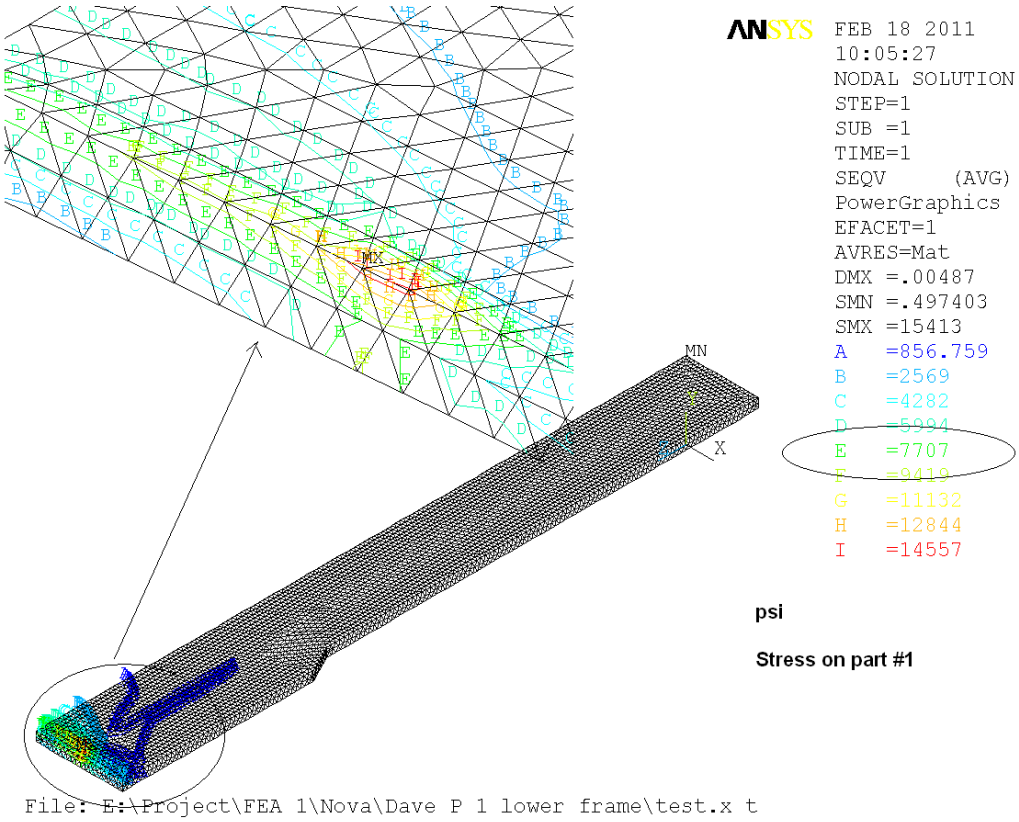

Fig A-1 Stress for part #1

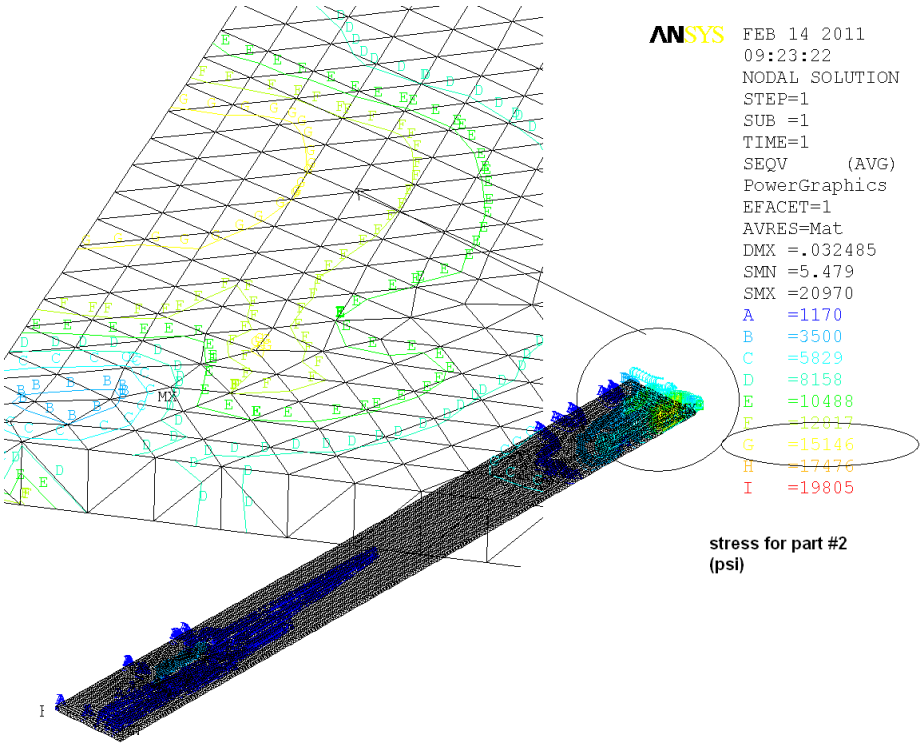

Fig A-2 Stress for part #2

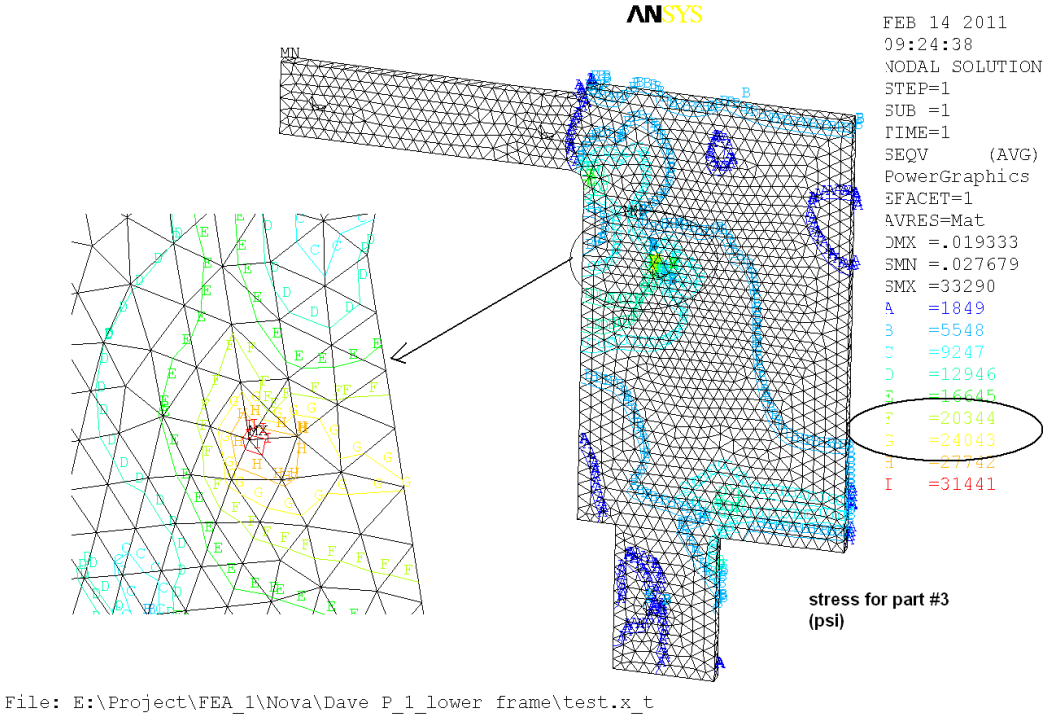

Fig A-3 Stress on part 3

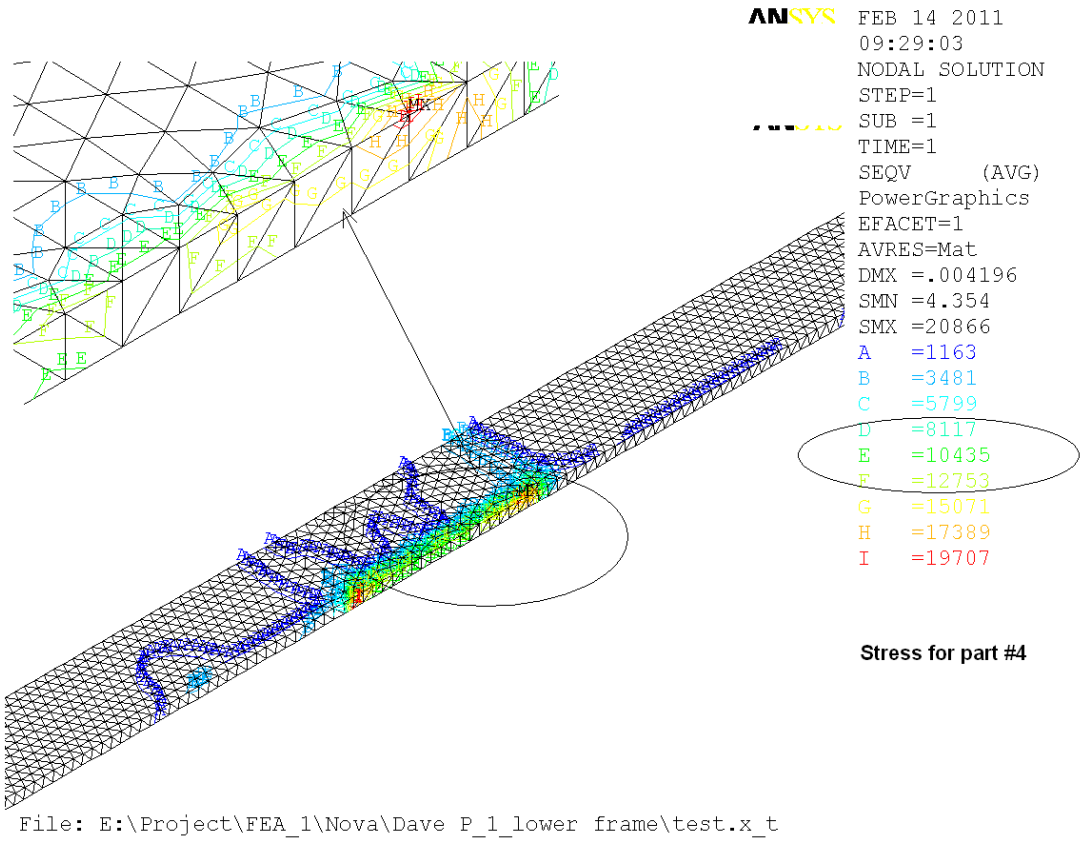

File: E:\Project\FEA_1\Nova\Dave P_1_lower frame\test.x_t

Fig A-4 Stress for part #4

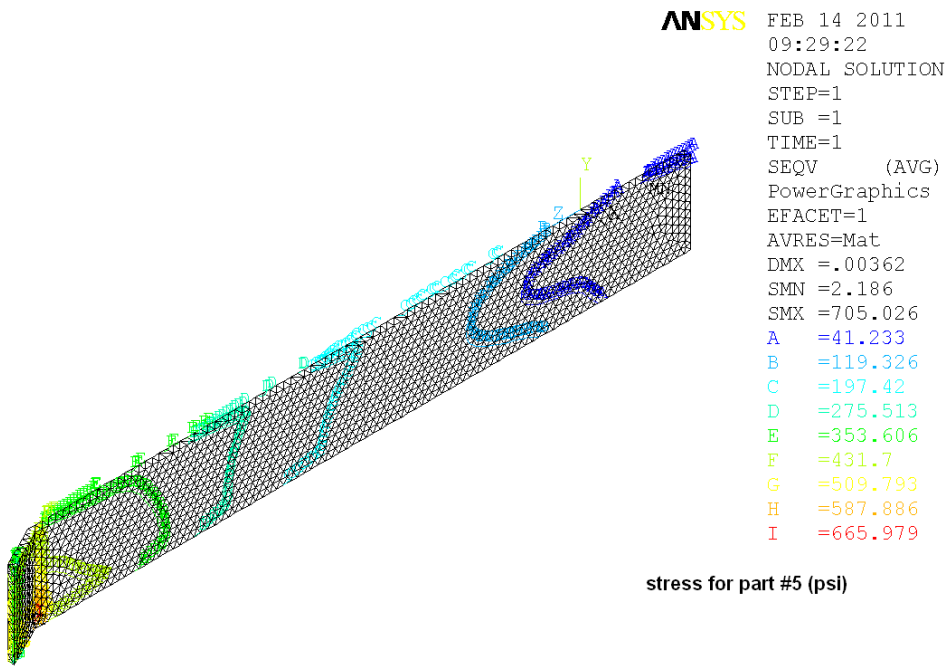

Fig A-5 Stress for part #5

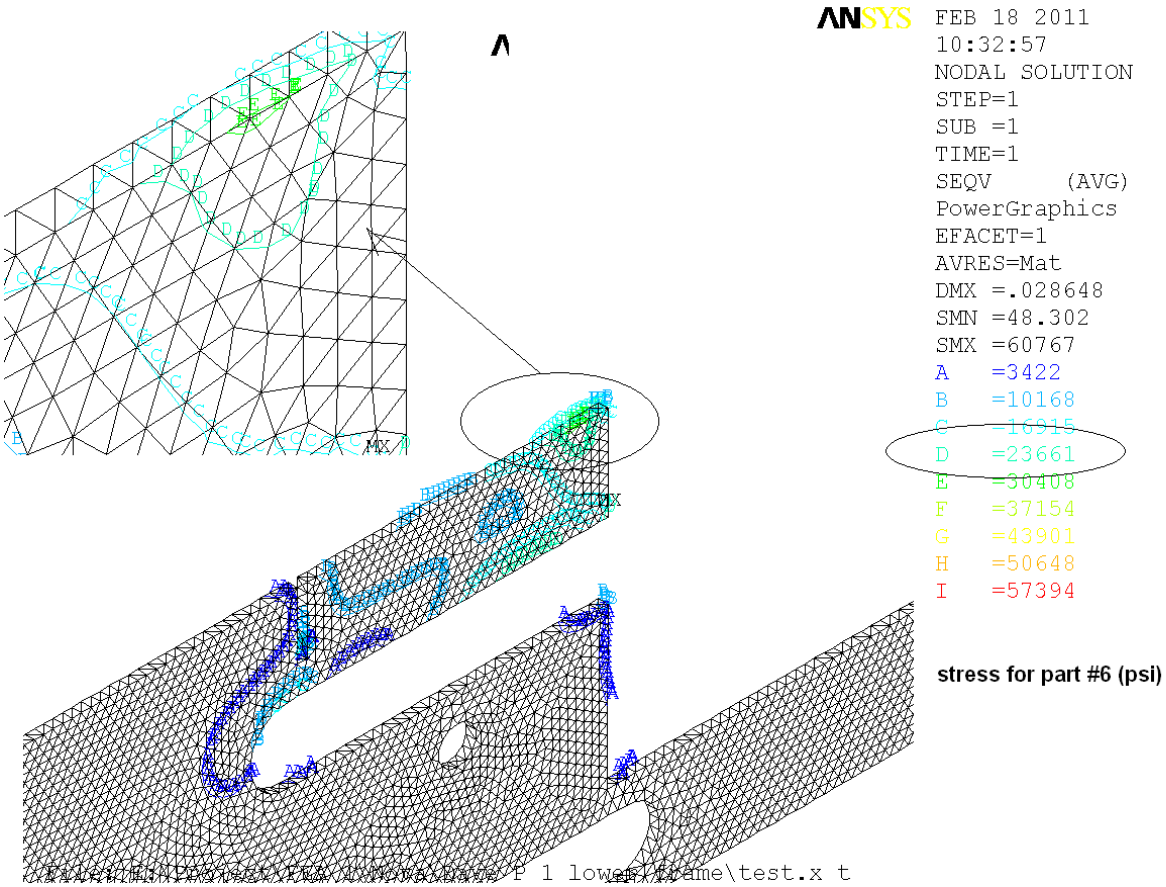

Fig 6A Von Mises stress for part #6

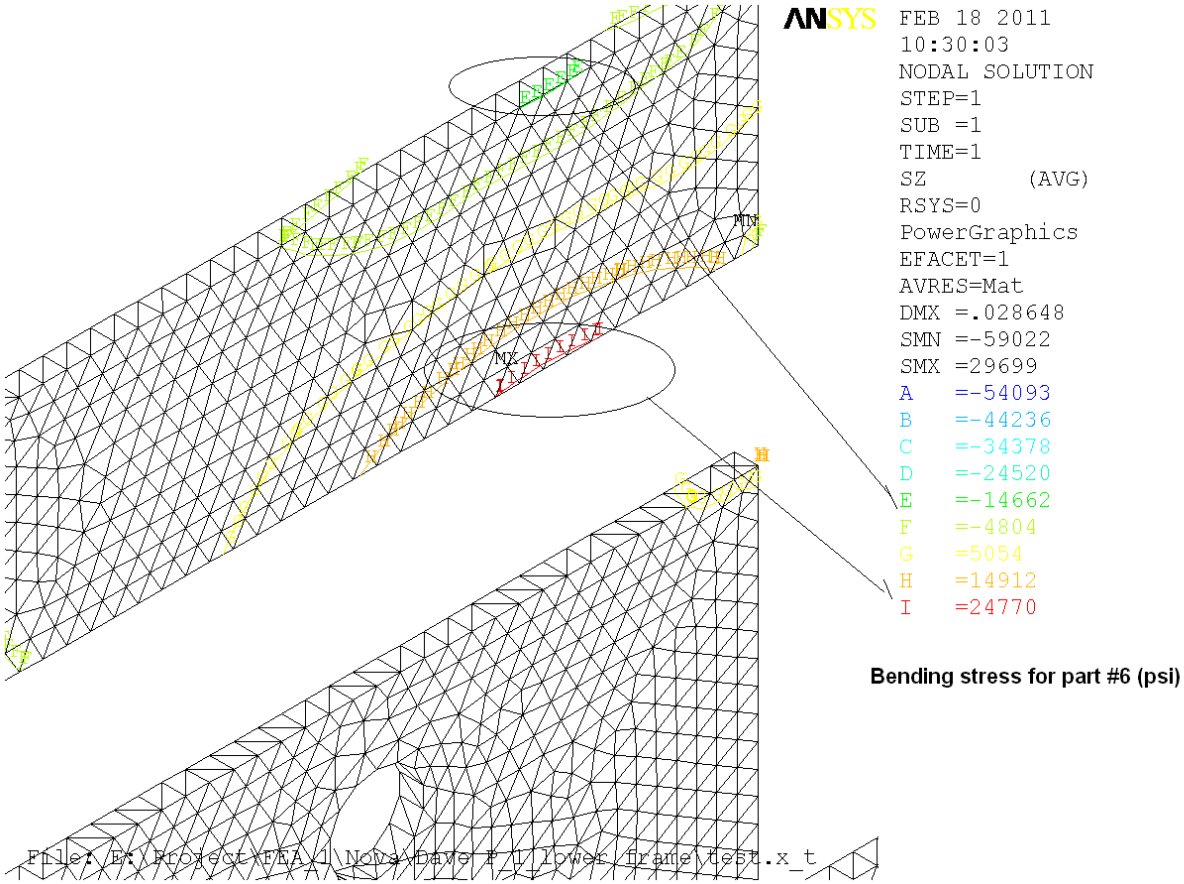

Fig 6B The bending stress for part #6

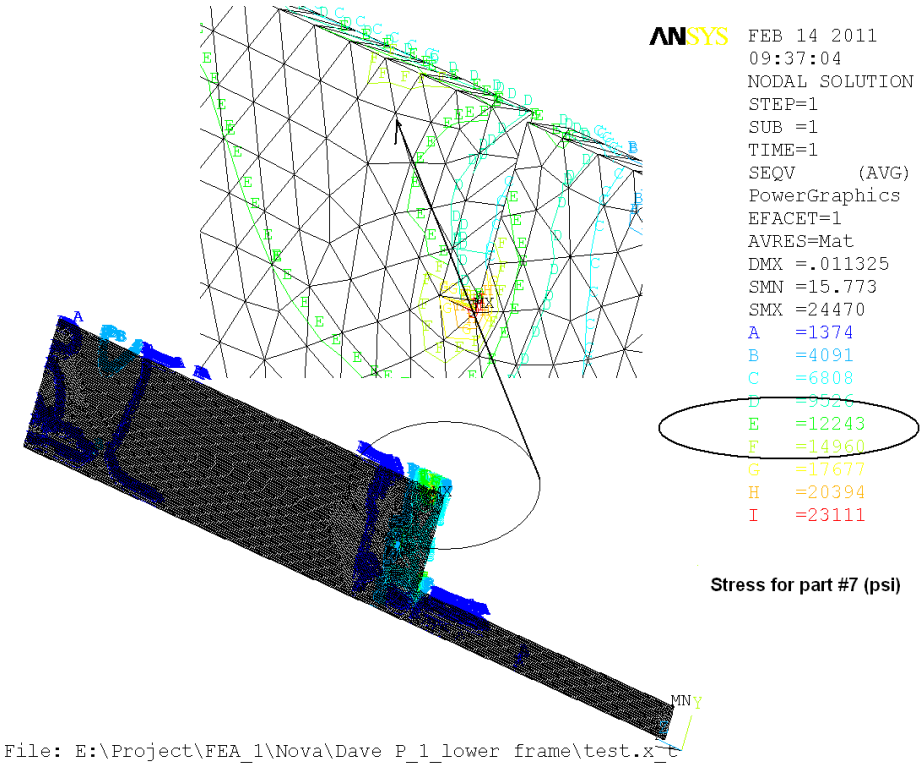

Fig A-7 Stress for part #7

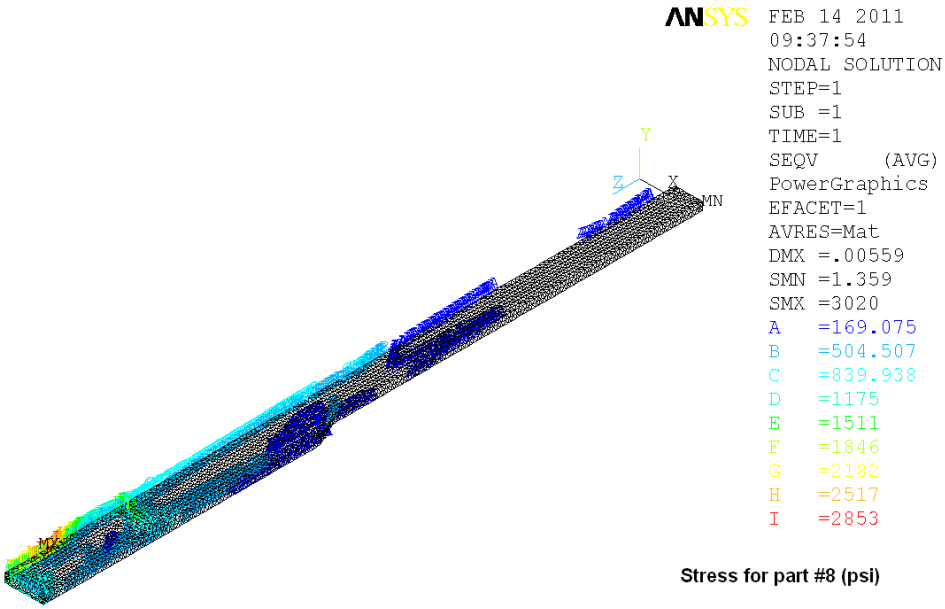

Fig A-8 Stress for part #8

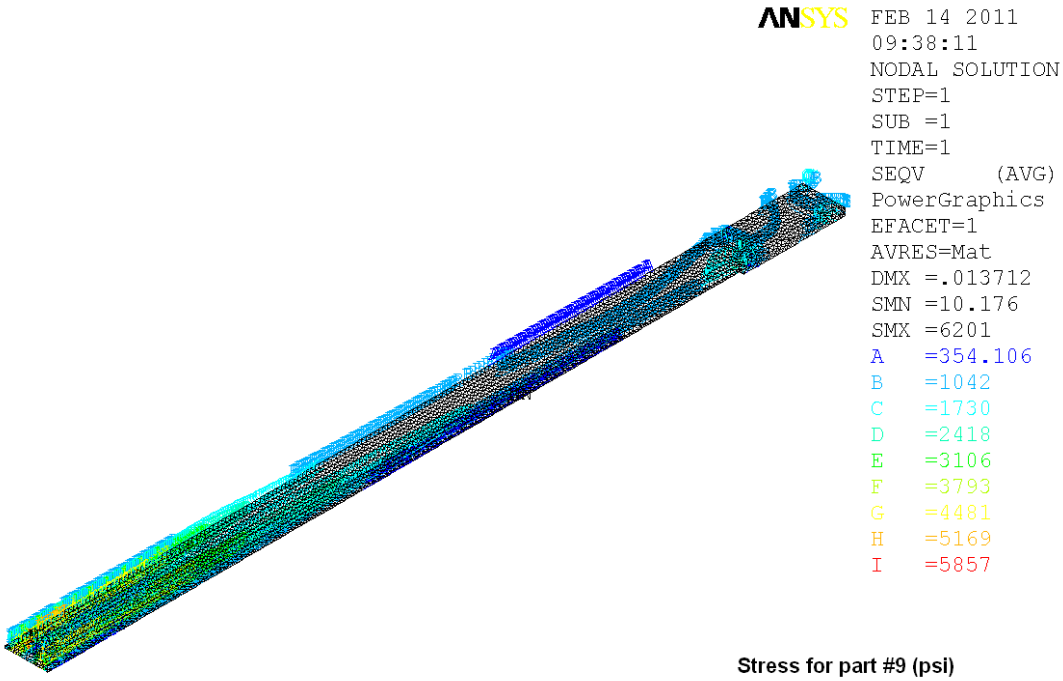

Fig A-9 Stress for part #9

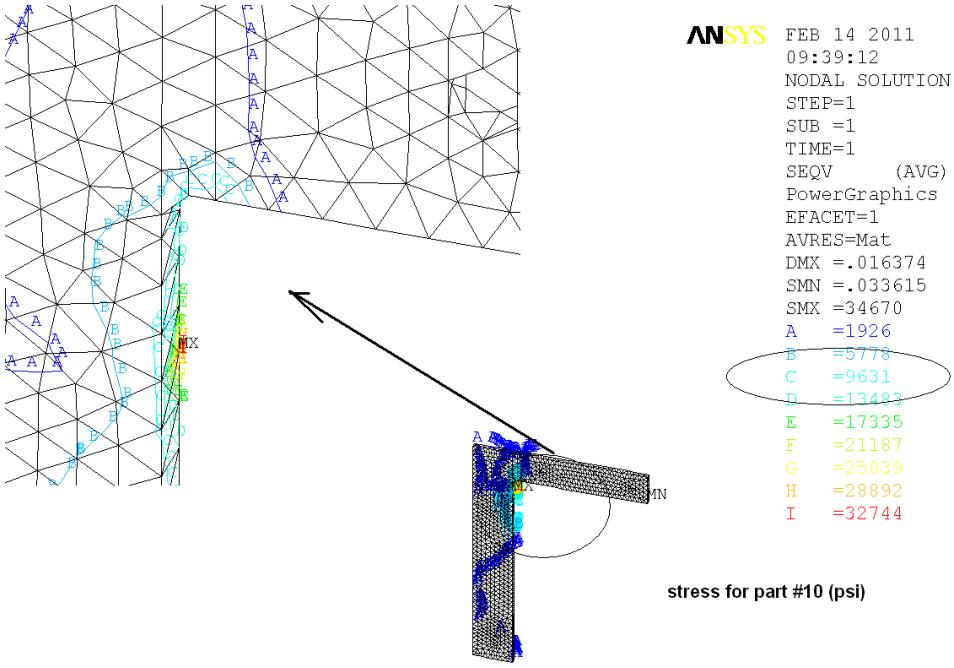

File: E:\Project\FEA_1\Nova\Dave P_1_lower frame\test.x_t

Fig A-10 Stress for part #10

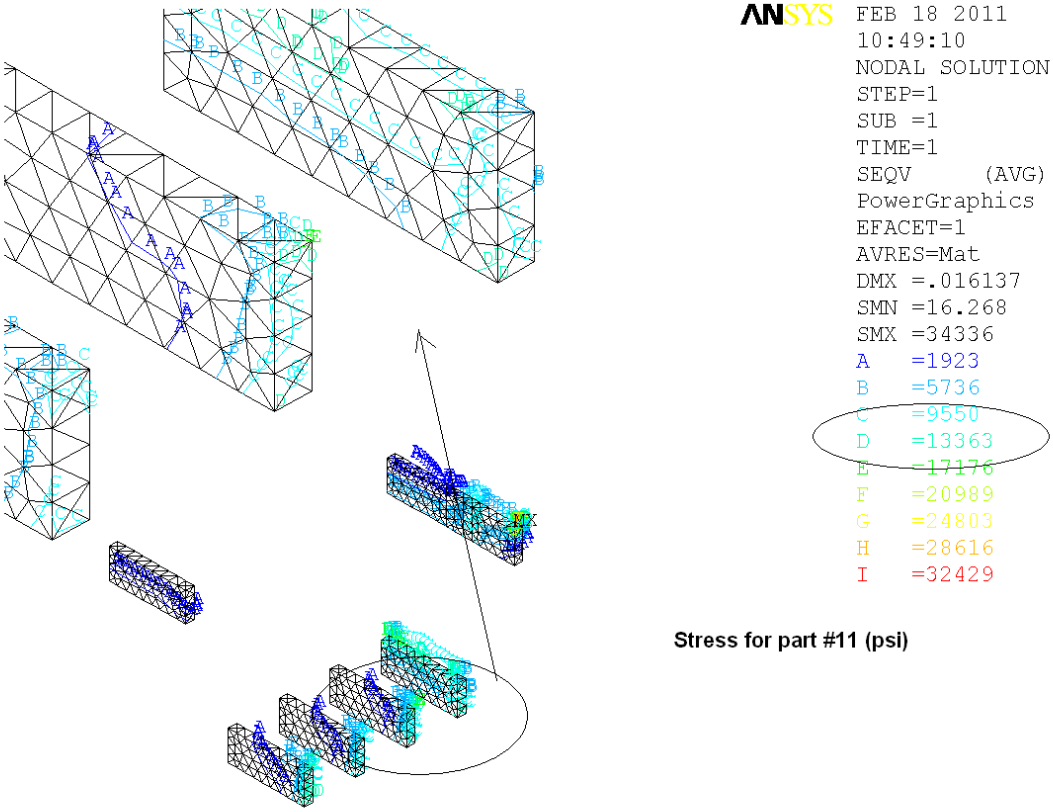

File: E:\Project\FEA_1\Nova\Dave P_1_lower frame\test.x_t

Fig A-11 Stress for part 11