Nova-doc-3560-v1

A Stress Analysis for a Steel Bookend used in FHEP (Nova) V1

Ang Lee

January 9, 2009

Introduction

A FHEP (Full Height Engineering Prototype will be sandwiched between two steel structure, which is proposed by Dave Pushka as shown in Fig 1. It serves as a bookend to prevent the excessive deformation, if any, from the PVC structure during the test. The following data is used in the stress analysis:

1) The steel is A-36, which gives an allowable=0.66*36=23.76 ksi
2) The front plate has a 19 psi pressure __ surface load, linearly distributed. It is considered to be the worst case.
3) The steel plate is 0.25" thick, except the front plate has a thickness of 3/8".

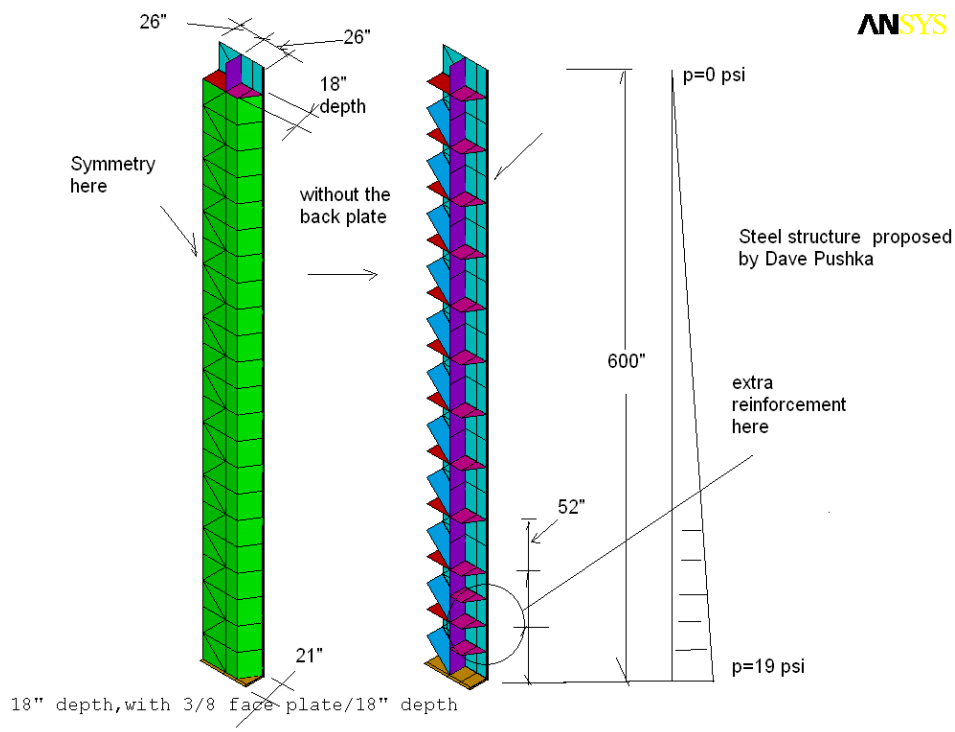

Fig 1 The steel bookend for FHEP

Model & Result

A shell element (#shell 181) is used to model the steel structure. Only half of the structure is needed due to the symmetry. The bottom plate is considered to be fixed. The structure has a lateral support up to 52*7=364" high as shown in Fig 2. The initial calculation indicates that there area several areas needed to be reinforced as:

a) Two lowest segments need a extra gussets to reduce the front plate stress (due to the highest pressure).
b) The back plate need to be reinforce as shown in Fig 3 due to the cantilever beam effect for the upper portion of the structure. The extra strip (3"x0.25") is also added due to the local buckling (face wrinkle) concern for the back plate.

The Table 1 is the calculation result. The working stress is less than allowable stress of 23.7 ksi. The maximum deflection is about 0.9" as shown in Fig 7 . The SF (safety factor) of the local buckling _ face wrinkle is SF=1.71 as shown in Fig 8. It is considered on the low end. However, by considering 19 psi linearly distributed pressure loading being so conservative, the proposed structure is adequate.

Table 1 The Stress Result for the Steel Bookend _FHEP (KSI)

Front plate (3/8")	Vertical Beam (1/4")	Back plate 1/8" section	Back plate 1/8"+3/8" reinforcement area	Gusset (1/4")	Reinforcement (3x0.25")
22.6 ksi Fig 4	16.3 ksi Fig 4	22.8 ksi Fig 5	20.8 ksi Fig 5	18.3 ksi Fig 6	17.2 ksi Fig 6

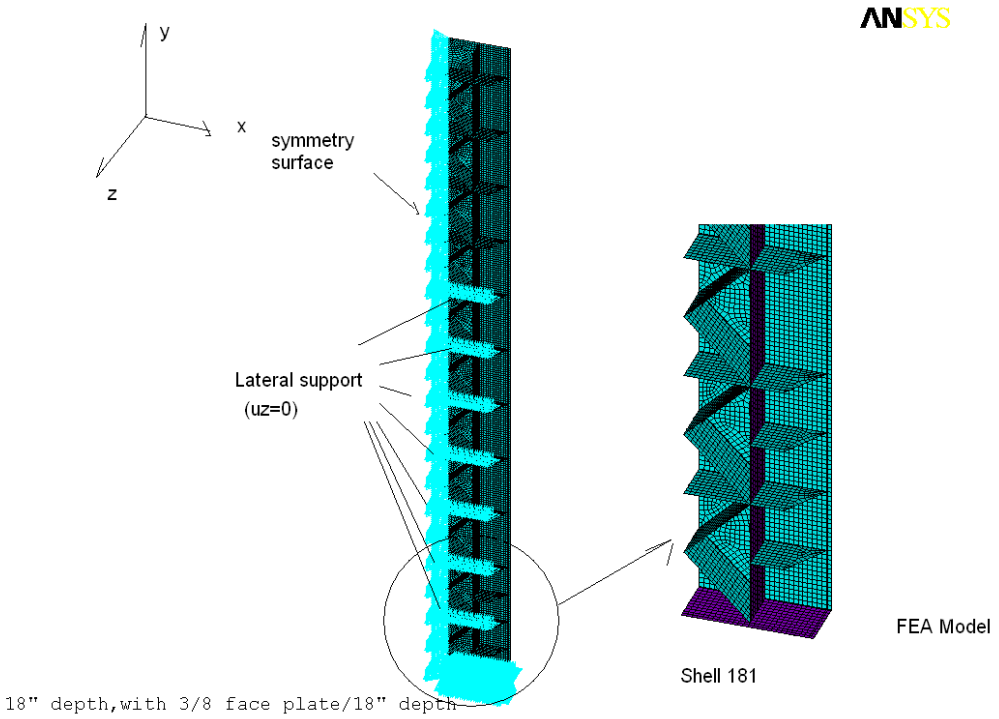

Fig 2 FEA model

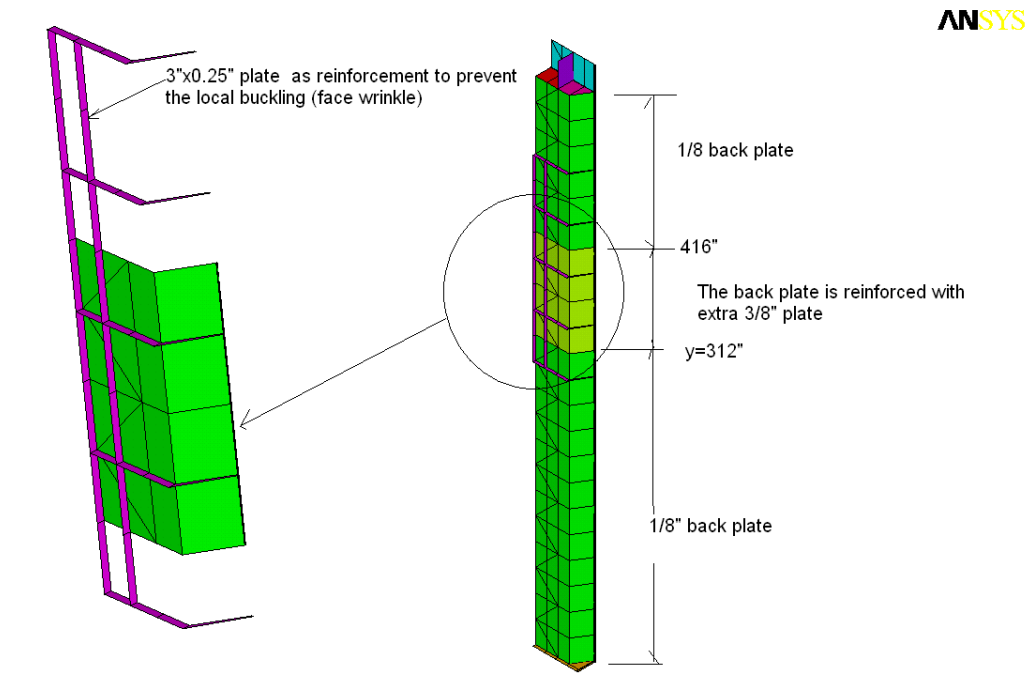

18" depth,with 3/8 face plate/18" depth

Fig 3 The details of extra reinforcement for the back plate

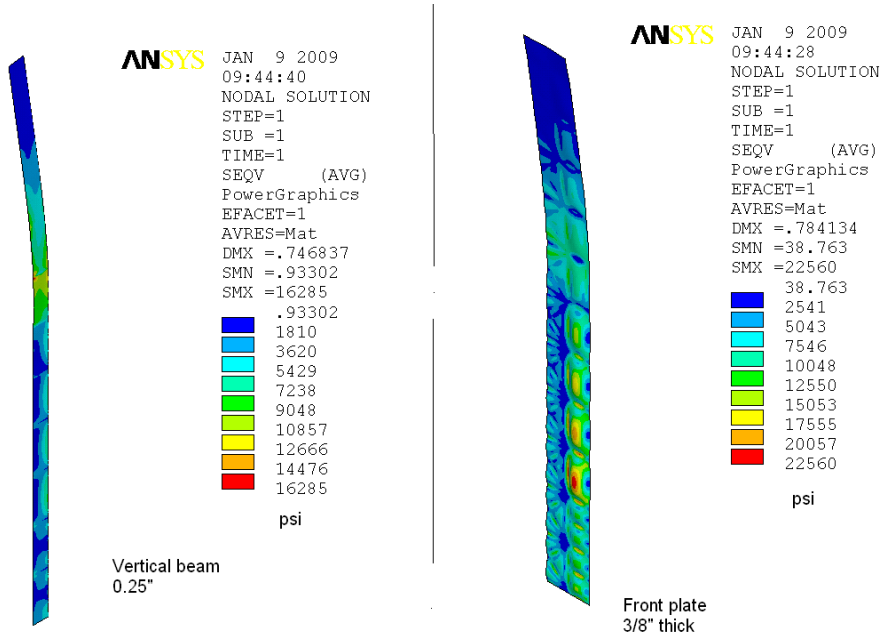

18" depth,with 3/8 face plate/18" depth

Fig 4 The stress for the front plate and vertical beam

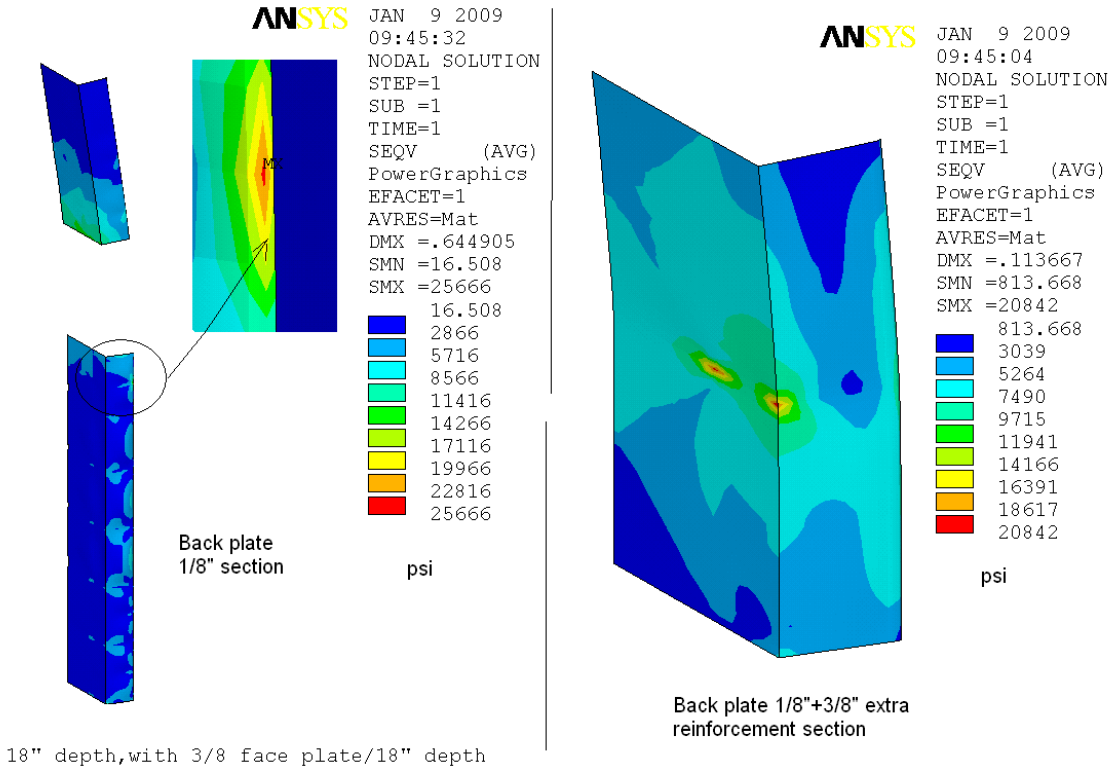

Fig 5 The stress for the back plate

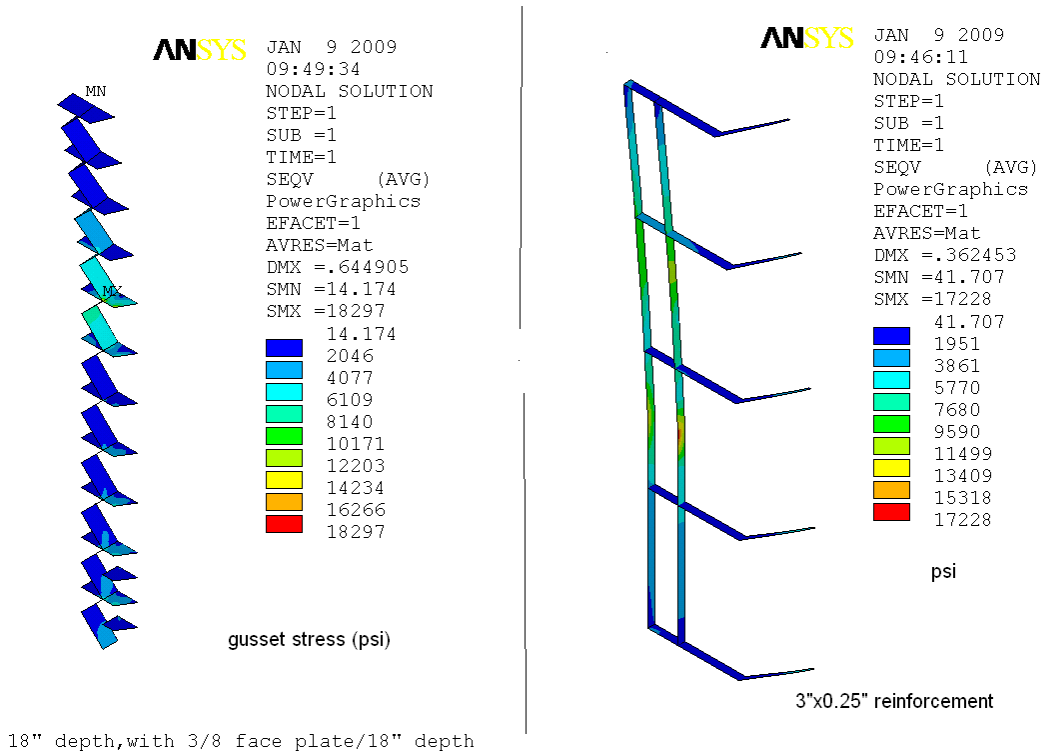

Fig 6 The Stress for the gusset plate and 3"x0.25" reinforcement plate

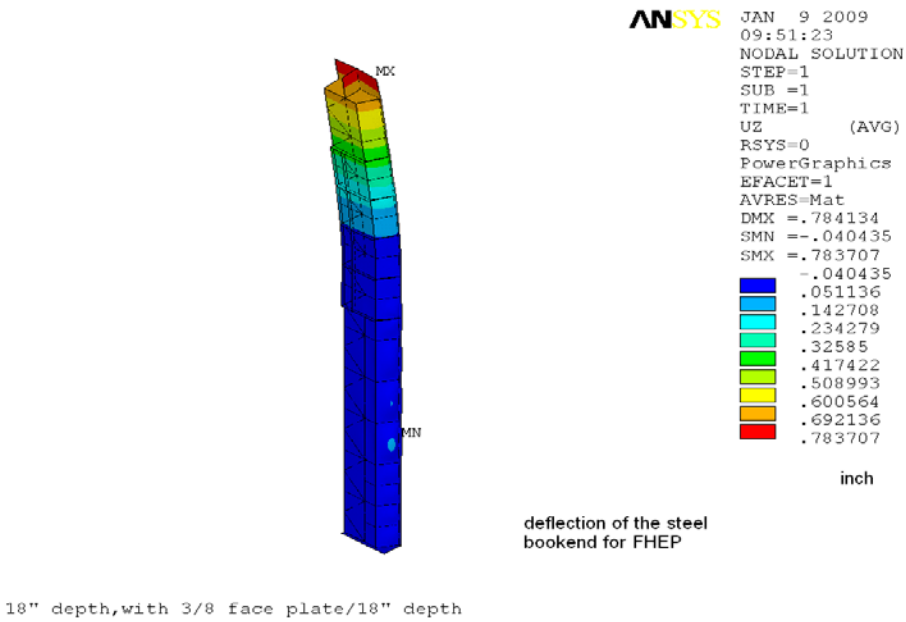

Fig 7 The deflection of the bookend

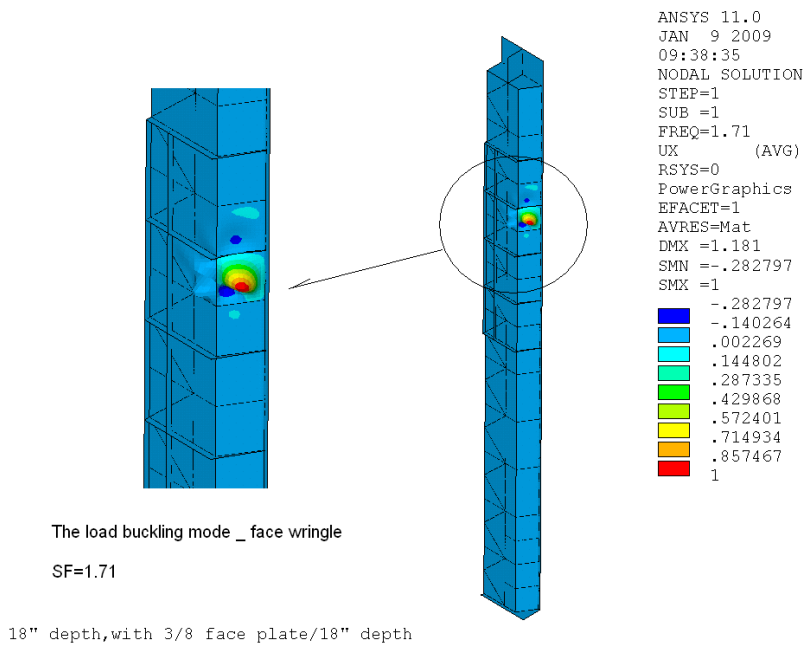

Fig 8 The local buckling mode (face wrinkle)