**Nova-doc-4416-v1**

# A Stress Calculation for the Steel Lower Frame used in Nova Pivoter Table Assembly

Ang Lee

December 16, 2009

## Introduction

A steel lower frame, used for Nova pivoter table assembly, is designed by D. Pushka as shown in Fig 1 (NOVA_FHEP_ FRAME_LOWER_WELDMENT_2). This note contains a stress calculation based on a given load (P_ forward pin & P_ rear pin). The structure is made of A-36 steel with an allowable of ~21.6 ksi.

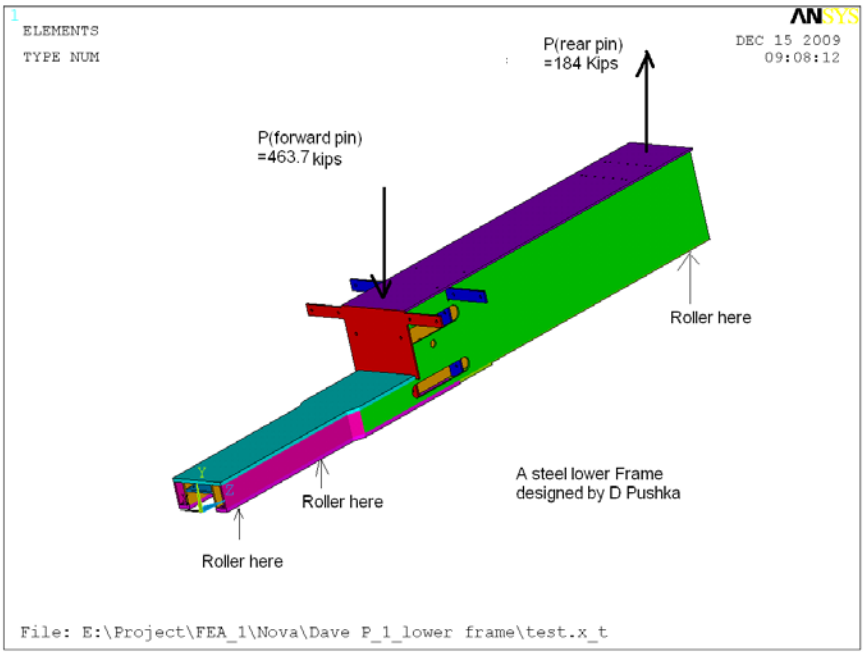


**Fig 1 A Steel Lower Frame**

## Modeling

One-half structure is modeled by 20 node solid element (Solid186) in Ansys as shown in Fig 2 and 3. The contact element is inserted where the roller is. Two cases have been studied

(1) First one is the initial design as shown in Fig 2.
(2) Second one is a modified version as shown on Fig 3.

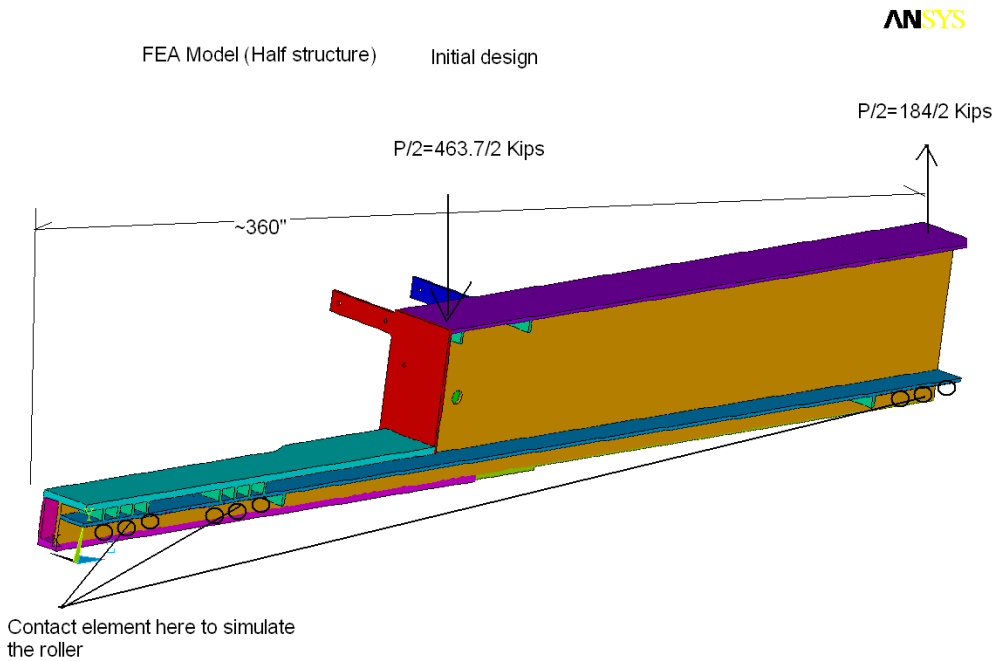


**Fig 2 The initial Design**

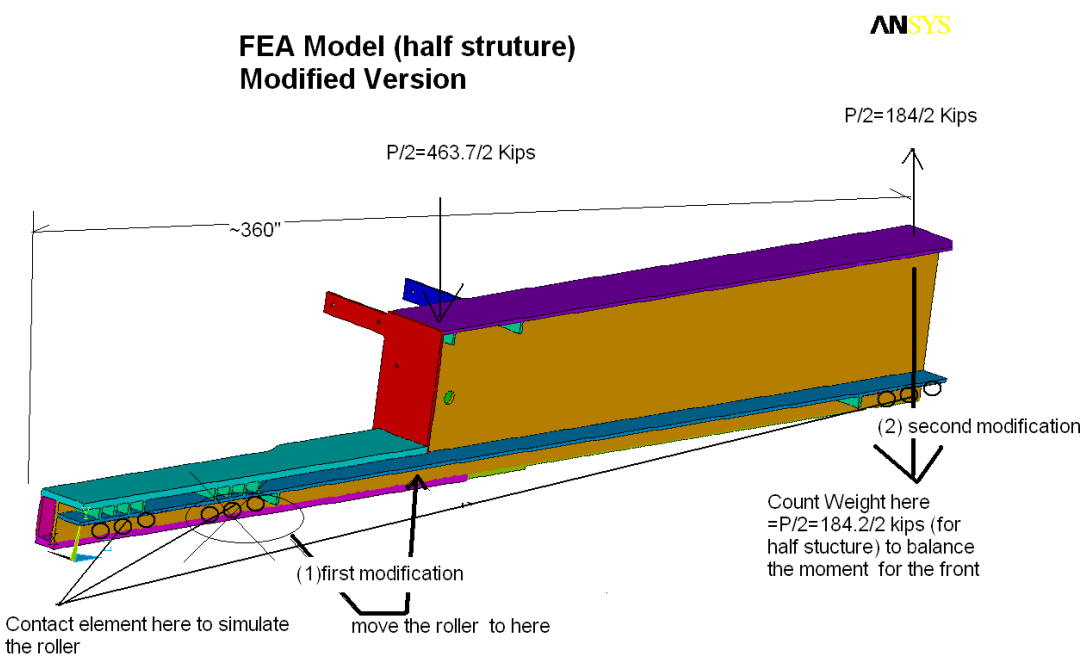


File: E:\Project\FEA_1\Nova\Dave P_1_lower frame\test.x_t

**Fig 3 A Modified Design**

## Result and Discussion

For the first design, the calculation indicates that the backside of the lower frame is lifted about 3" from ground due to the up-lifting force from the rear pin. This rear pin force results a very large stress on the "least" section of the mid span. Therefore, a revised version has been proposed and studied (Fig 3) *with a second roller moved closer to the forward pin area to directly transmit the force to the floor and an addition of the counter weight on the rear side to balance the moment*. In the FEA model, we've assumed that the counter weight will be the same as the lifting force by setting P rear pin =0. The calculation shows that the stress on the steel frame is within the allowable. The deflection is much less than the initial design. The result is summarized in the Table 1.The buckling calculation shows that the 2nd design should have enough safety factor (Fig 18). With a proper weld (not included in this study), the lower frame design (2nd design) is structurally sound.

**Table 1 Stress Result for the Second Version Design**

| Component | 1 | 2 | 3 | 4 | 5 | 6 | 7 | 8 | 9 | 10 | 11 |
|---|---|---|---|---|---|---|---|---|---|---|---|
| Max stress (ksi) | 15 | 16 | 20 | 5 | 1.5 | 26/8.5* | 17 | 5.5 | 4.8 | 11 | 12.8 |

*Note: The stress (26 ksi) of part#6 is mostly in compression (bearing type ) due the forward pin just sitting directly above it. The bending stress actually quite low, around ~8.5 ksi (see Fig 12a, Fig12b and Fig 13c)

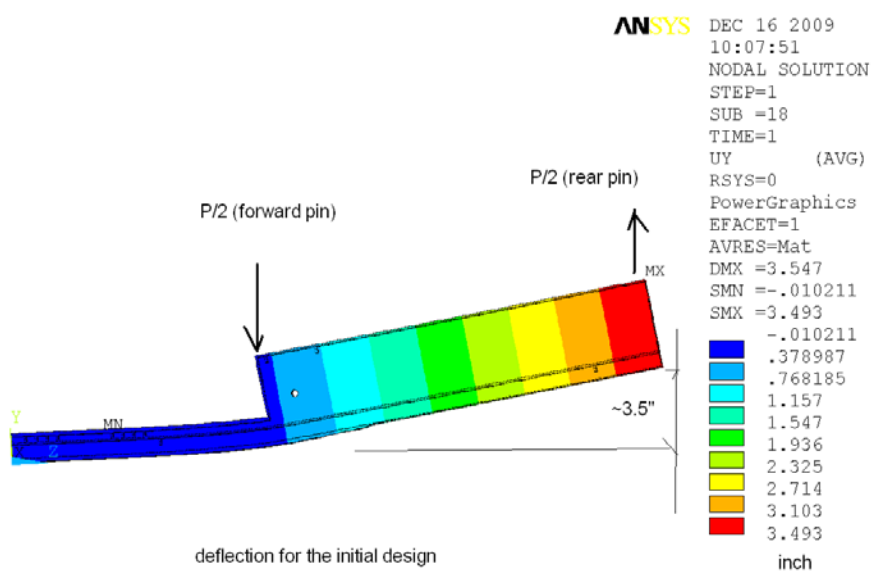


**Fig 4 The deflection for the initial design**

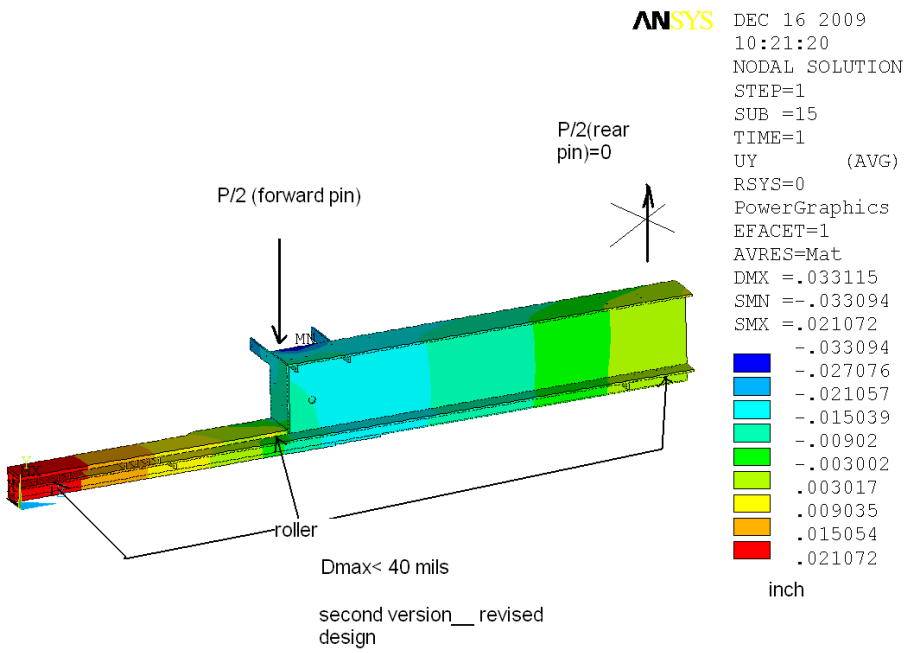


File: E:\Project\FEA_1\Nova\Dave P_1_lower frame\test.x_t

**Fig 5 The deflection for the revised version**

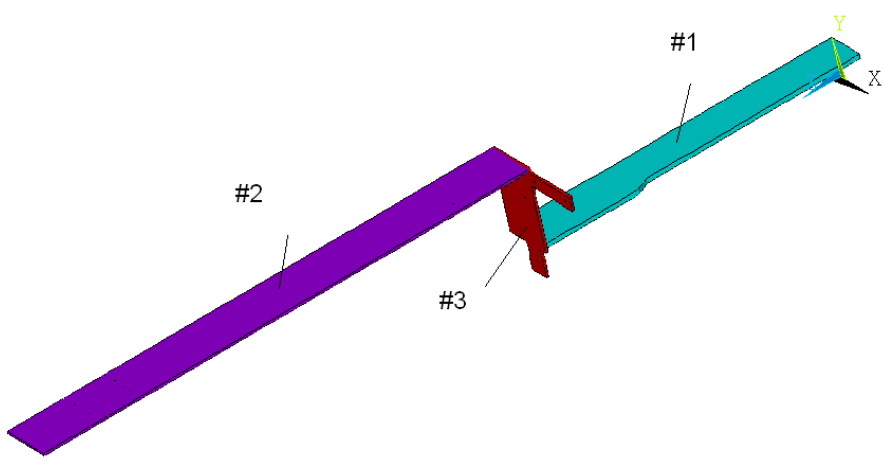


**Fig 6a The component (#1--#3) corresponding to the Table 1**

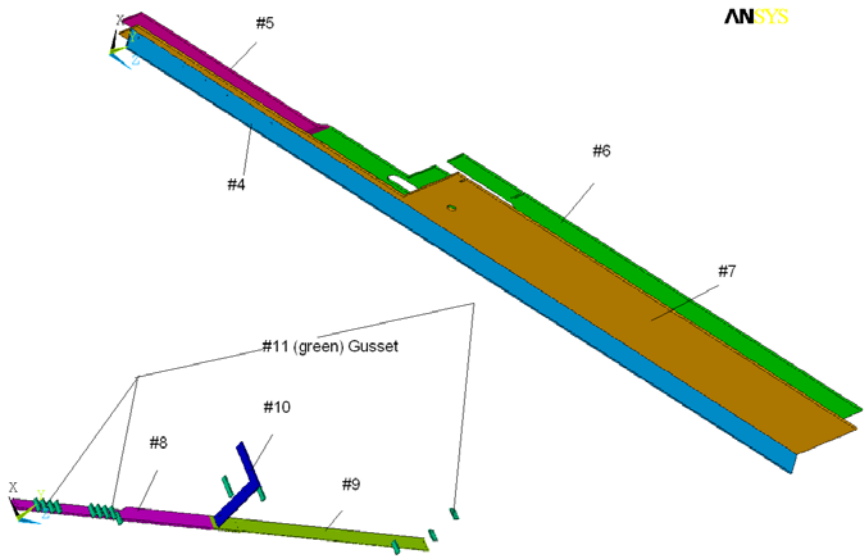


**Fig 6b The component (#4--#11) corresponding to the Table 1**

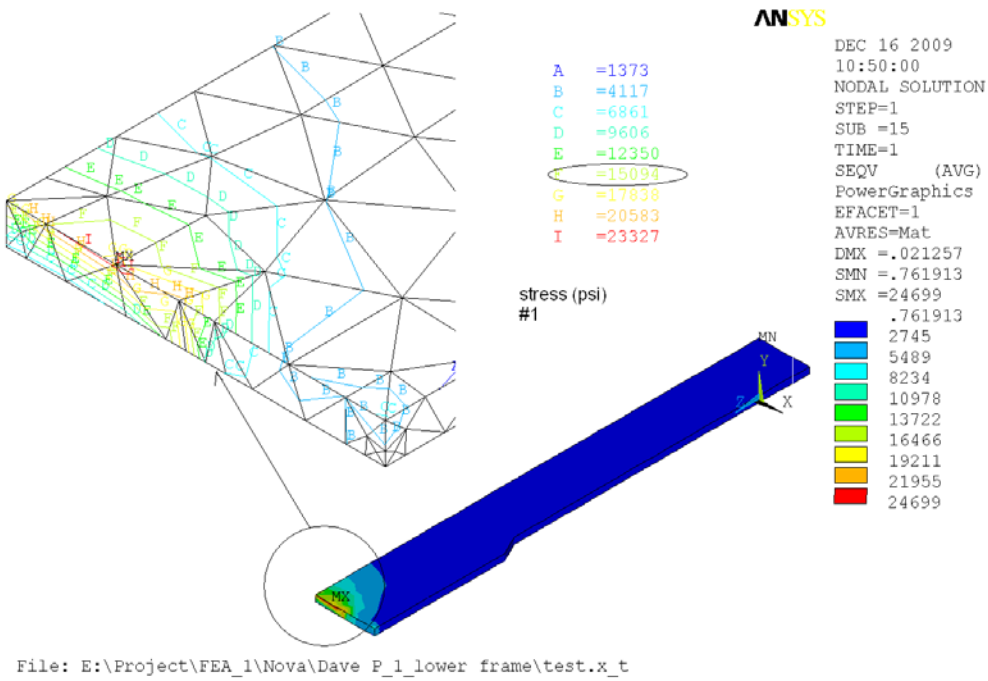


**Fig 7 Stress for parts #1, 2nd design**

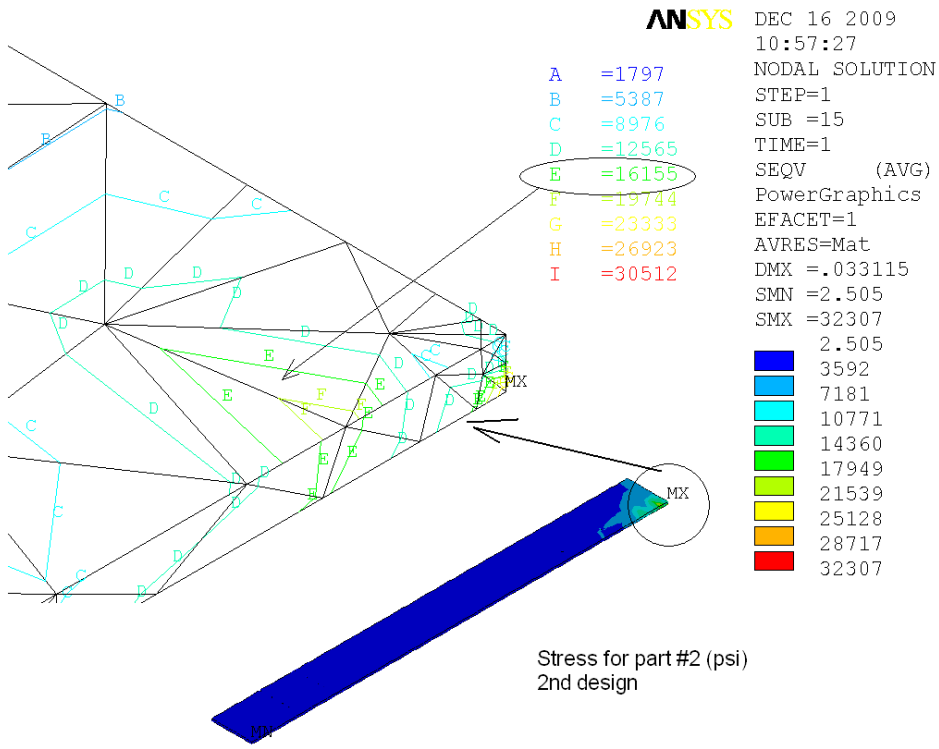


File: E:\Project\FEA_1\Nova\Dave P_1_lower frame\test.x_t

**Fig 8 Stress for part #2, 2nd design**

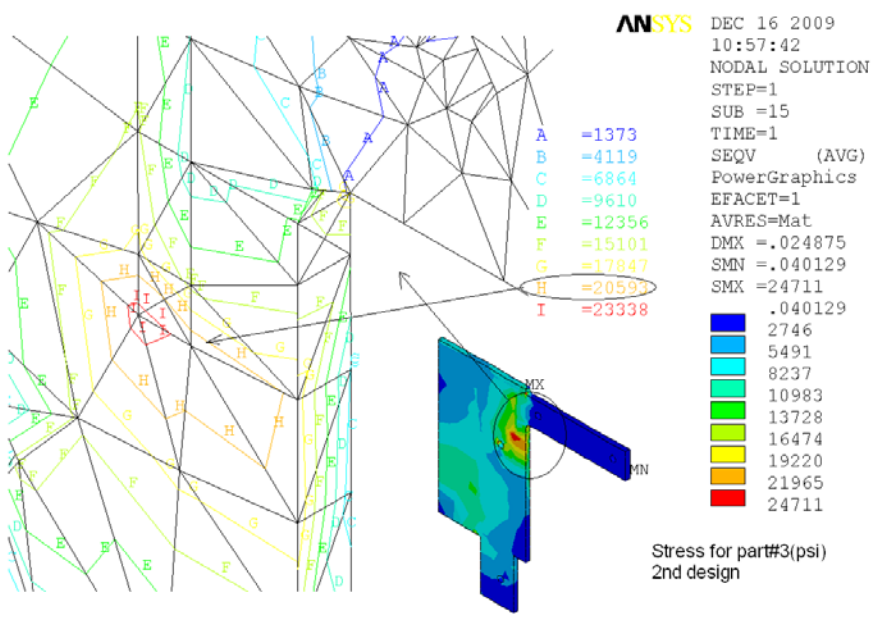


File: E:\Project\FEA 1\Nova\Dave P 1 lower frame\test.x t

**Fig 9 Stress for part #3, 2nd design**

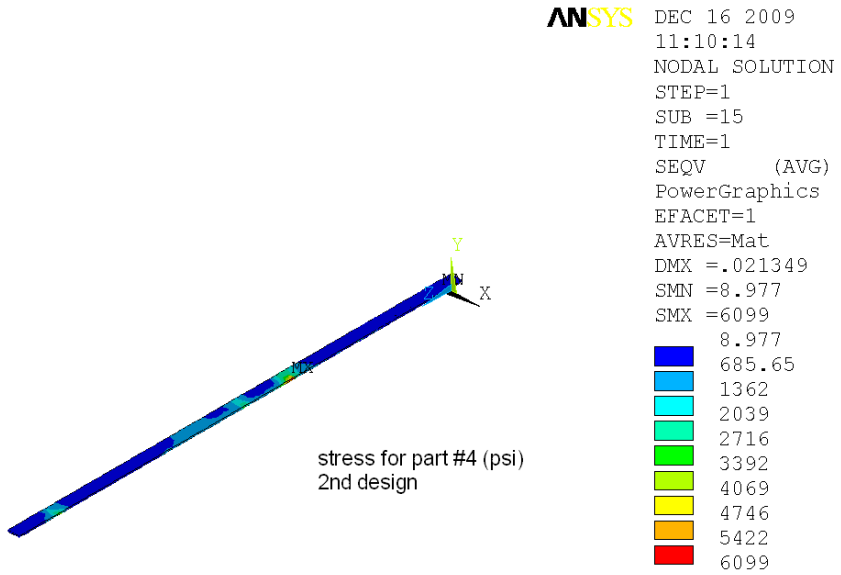


**Fig 10 Stress for part #4, 2nd design**

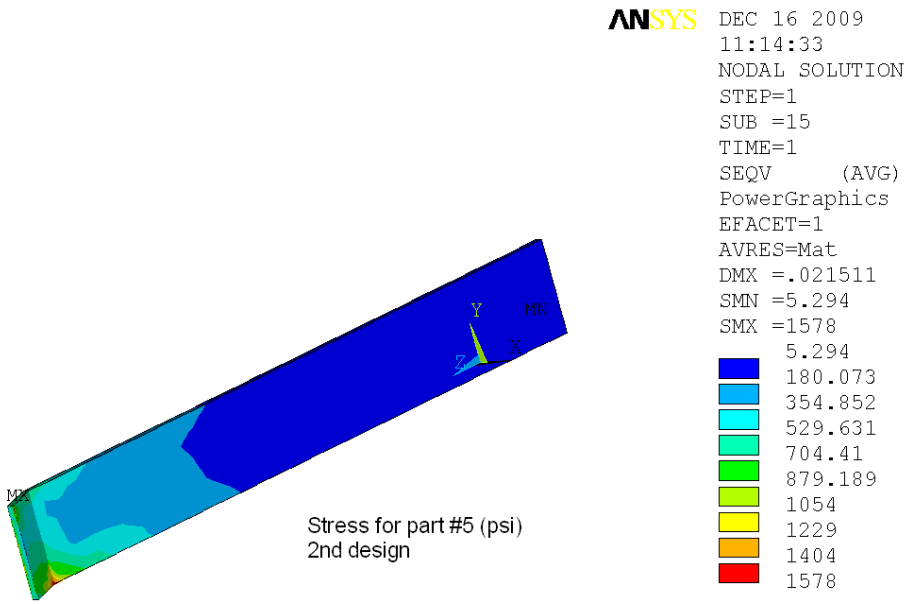


**Fig11 Stress for part#5, 2nd design**

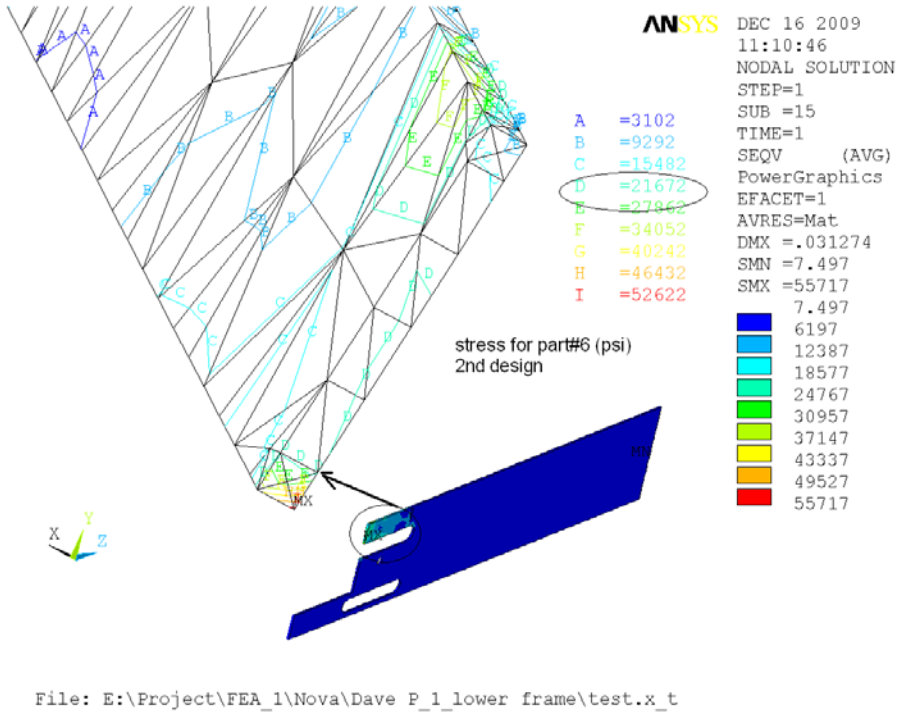


**Fig12a Stress for part#6, 2nd design**

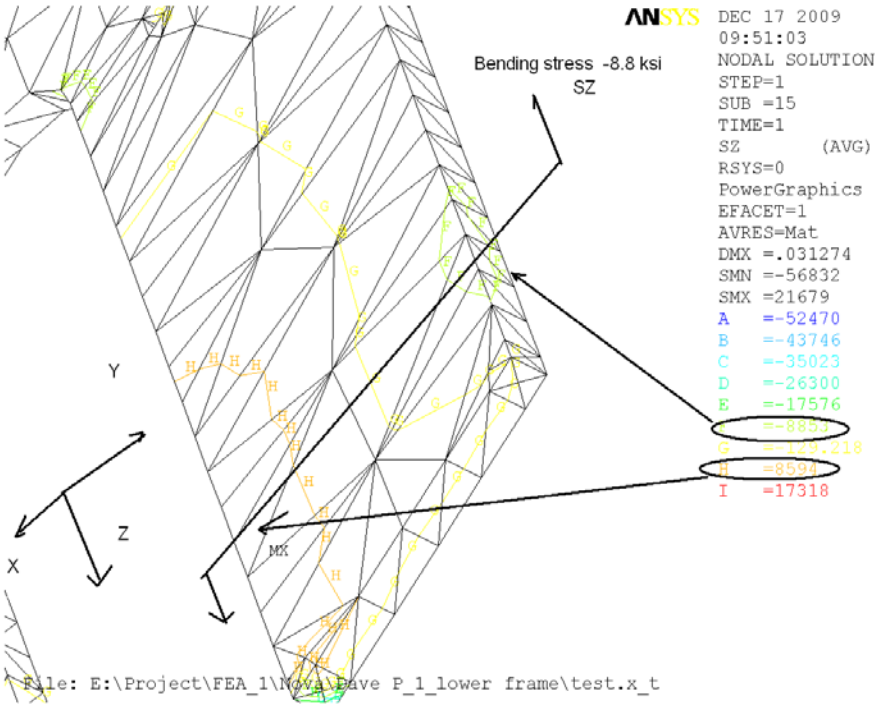


**Fig 12b The bending stress Sz for part #6, 2nd design**

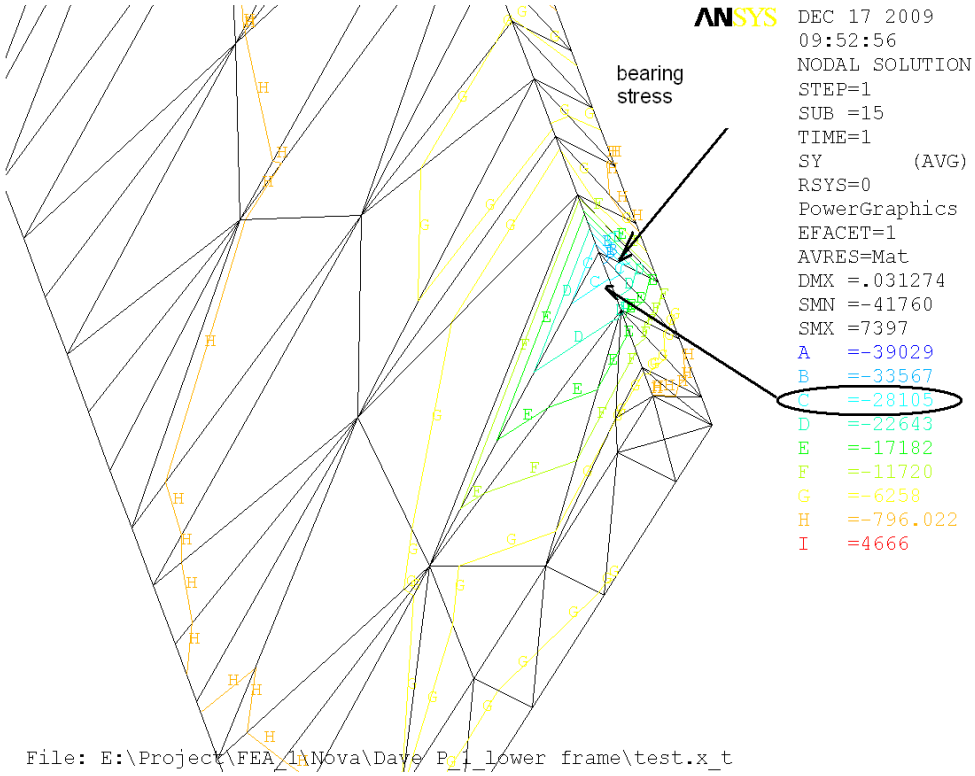


**Fig 12c The bearing stress for part#6, 2nd design**

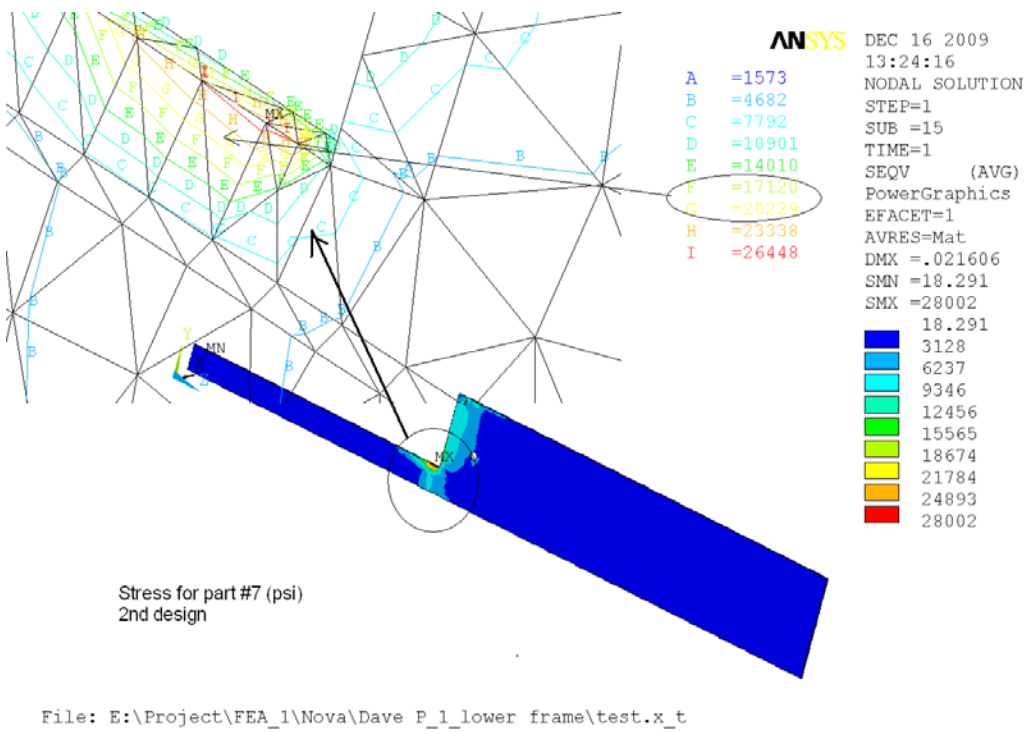


**Fig 13 Stress for part #7, 2nd design**

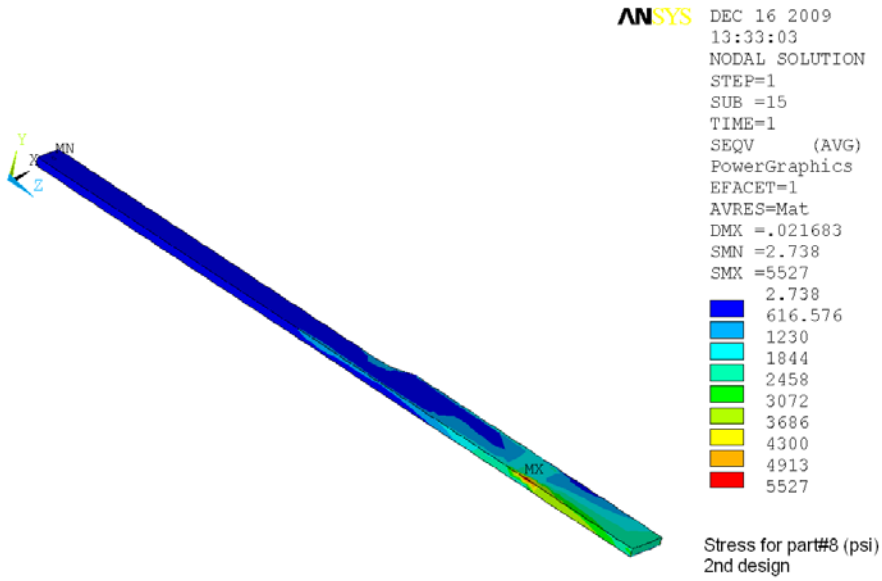


**Fig 14 Stress for part #8, 2nd design**

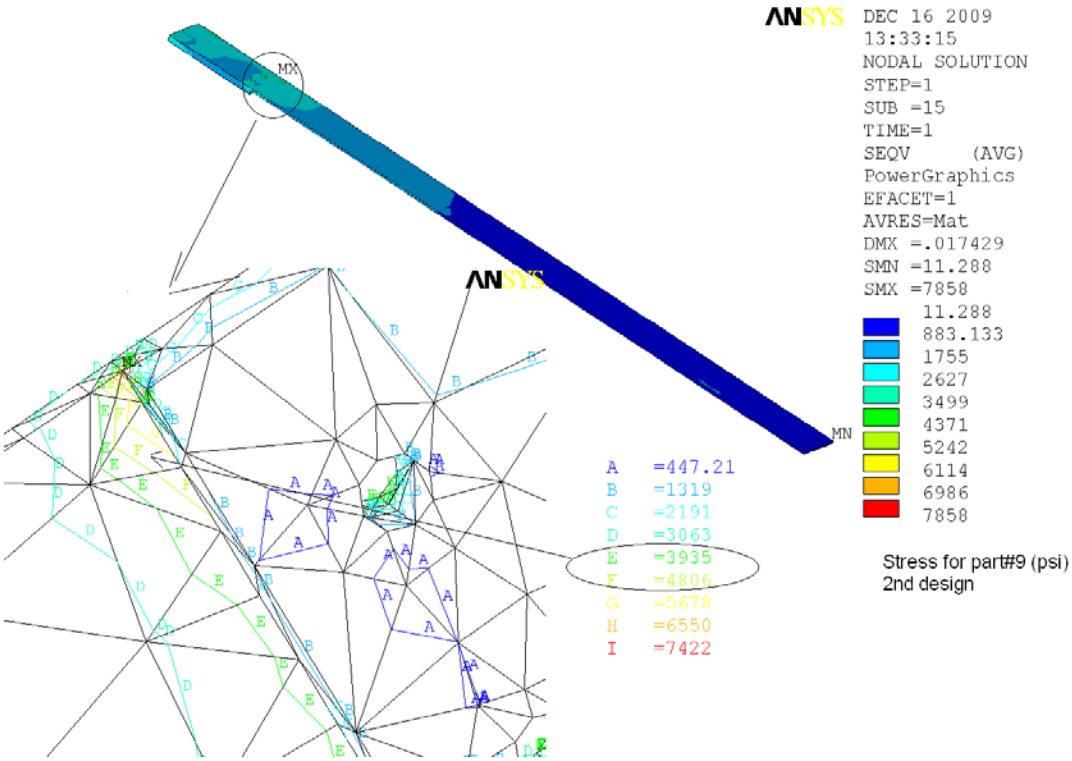


**Fig 15 Stress for part#9, 2nd design**

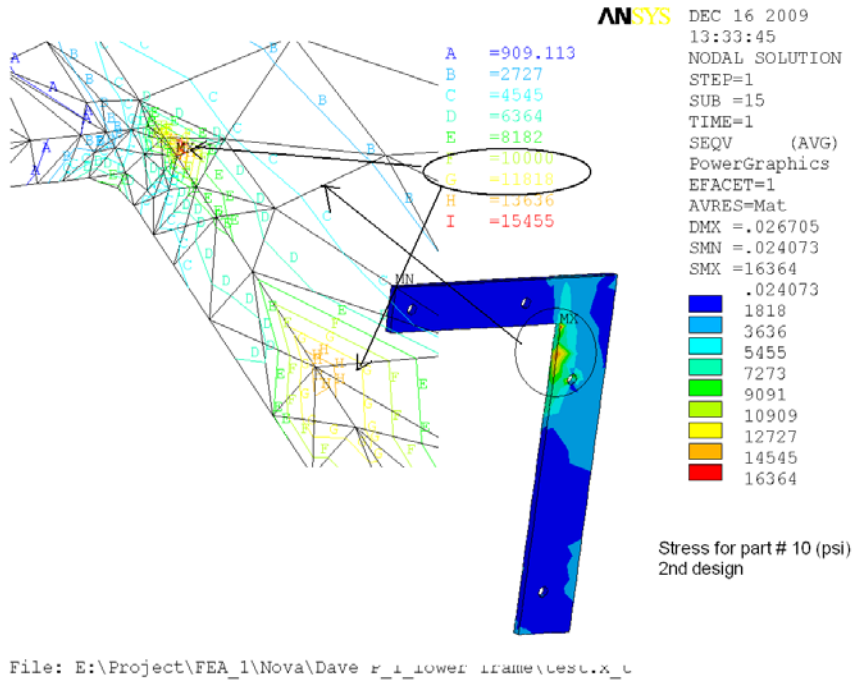


**Fig 16 Stress for part #10, 2nd design**

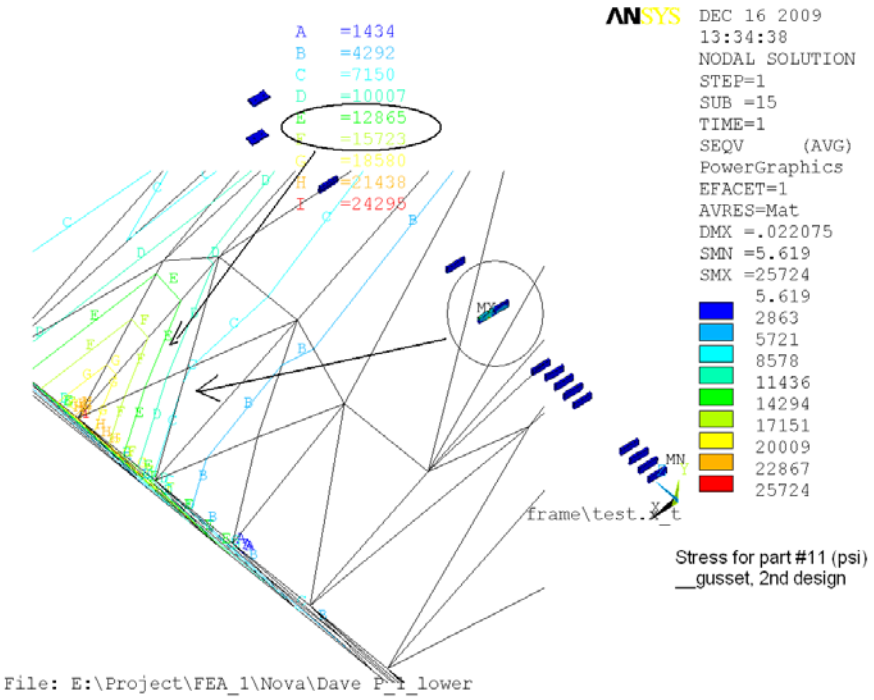


**Fig 17 Stress for part#11, 2nd design**

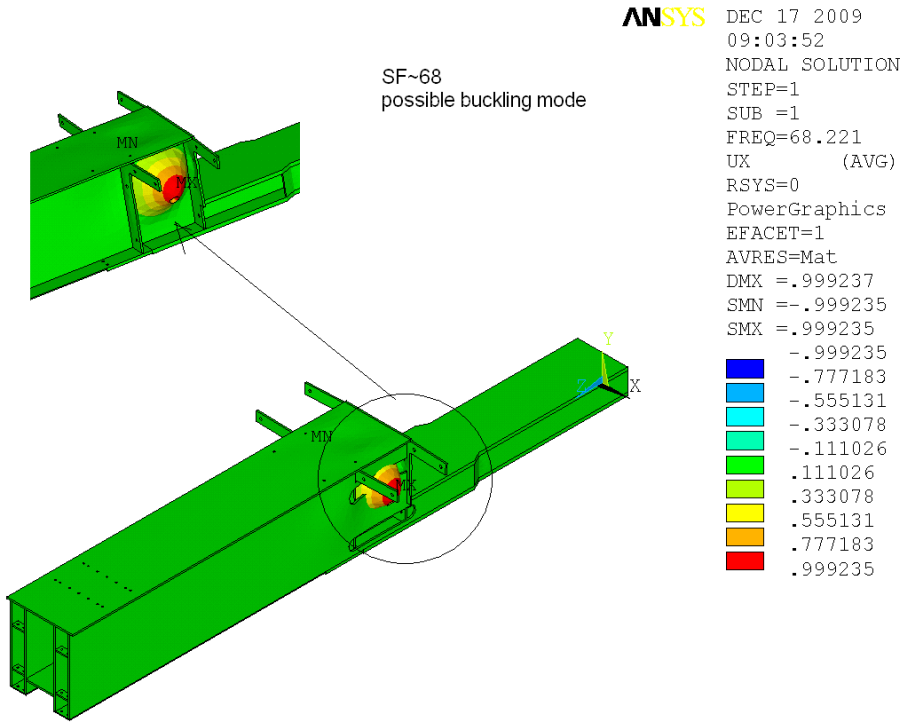


File: E:\Project\FEA_1\Nova\Dave P_1_lower frame\test.x_t

**Fig 18 Possible buckling Mode, SF~68**