Nova-doc-4217-v1

An Updated Calculation for the Upper Arm used in FHEP

Ang Lee

Sept. 15, 2009

Introduction

A steel upper arm, used for Nova pivot table assembly, is designed by D. Pushka as shown in Fig 1. This note is to update the calculation [(1)] to reflect the latest change/modification as shown in "NOVA/FHEP/UPPER_FRAME_AND_CSYLINDER_1/FRAM_UPPER_4_ ASSEMBLY". The structure is made of A-36 steel with an allowable of ~21.6 ksi.

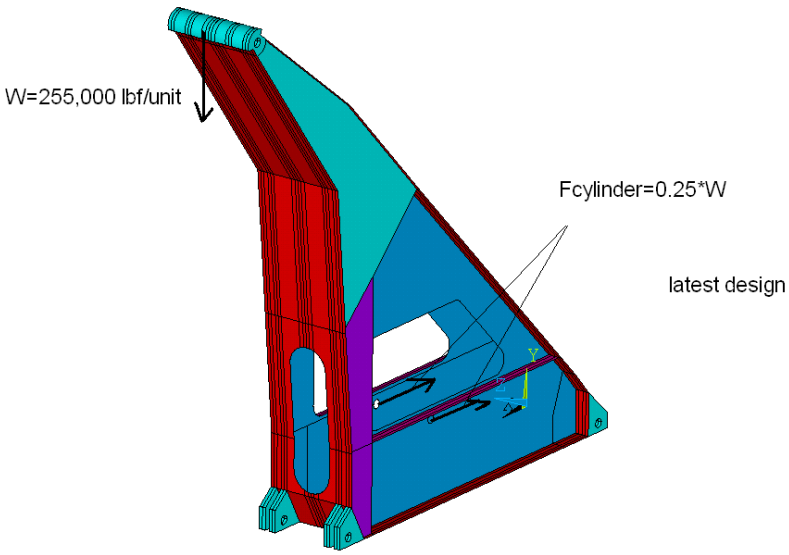

Fig 1 The Upper Arm Structure

Modeling

One-half structure is modeled by a shell element (shell 181) in Ansys as shown in Fig 2 with a following condition:

a) The gravity load from the table is applied on the top housing area as W/2=255,000/2=127,500 lb.

b) The cylinder reaction (Fcylin) is estimated based on the earlier study [(2)] . It is ~25% of the vertical load W.

c) The constraints, for both front and back housing, are shown in Fig 2. For the front one, top half is constrained along the radial direction only with free rotation along the tangential direction. The back housing is constrained in a similar fashion, except it is on the lower half.

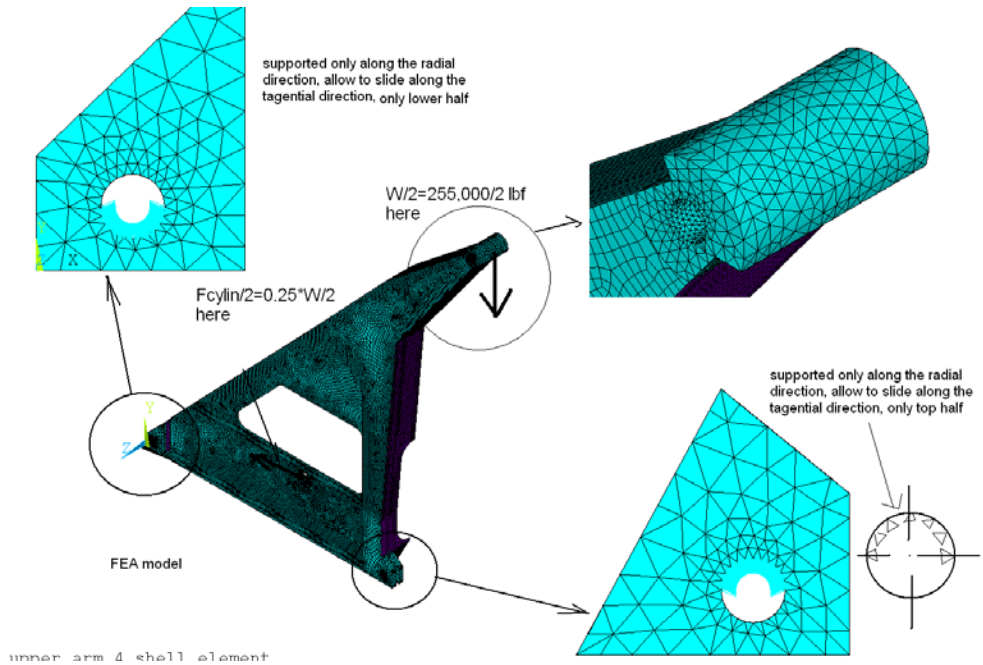

Fig 2 FEA model

Result

The calculation result is summarized in Table 1. The structure seems adequate for a given loading case.

Table 1 Stress for the upper arm

Parts	#1_ upper reinforce-ment	#2 _ lower reinforce-ment	#3_top flange	#4_web section	# 5_ mid reinforce-ment	#6_back bracket	#7 _ the front bracket	#8 _top housing
Plate Thickness (inch)	2”	1”	2”	1”	0.”	Solid block	Solid block	Solid block
Stress (ksi)	**9.8**	**6.5**	**16.2**	**13.4**	**11.9**	**9.8**	**16.7**	**11.9**
SF for the buckling	**SF=17**							

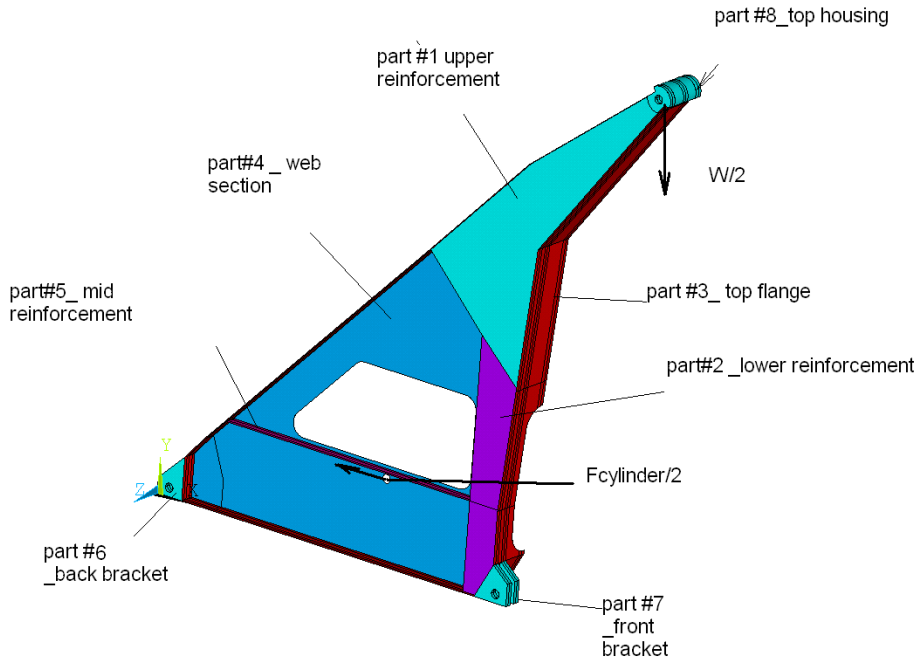

Fig 3 The description of the part

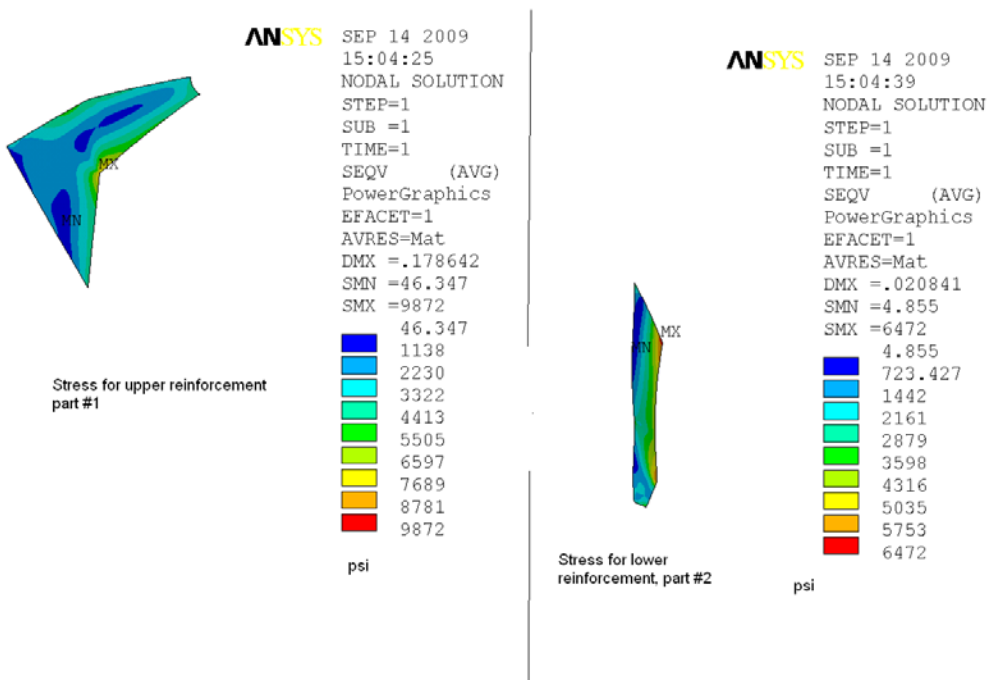

Fig 4 Stress for upper and lower reinforcement plate

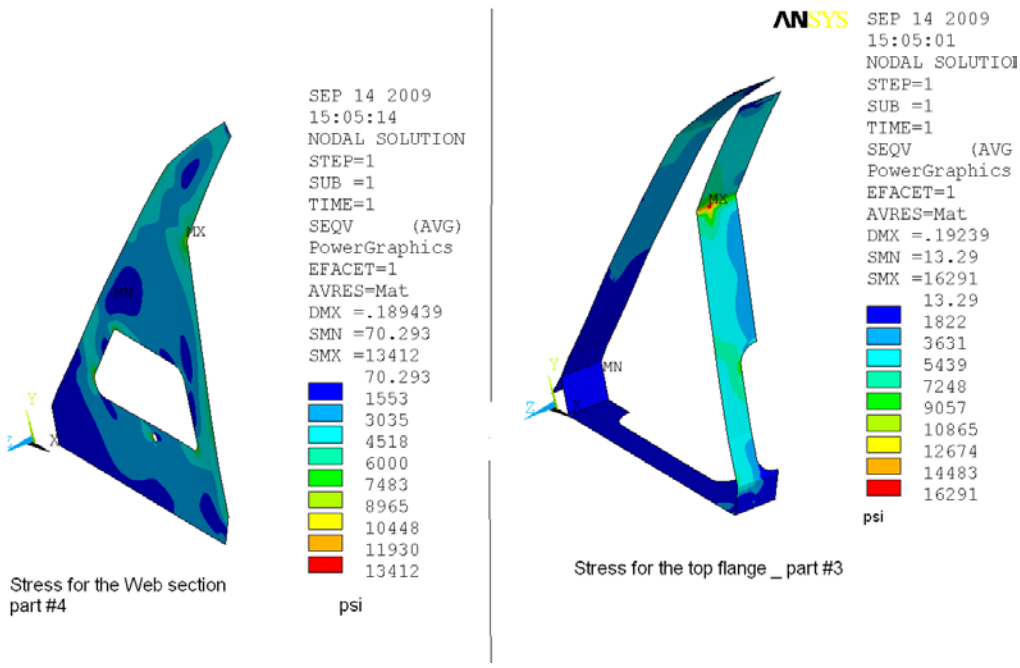

Fig 5 Stress for the web & top flange

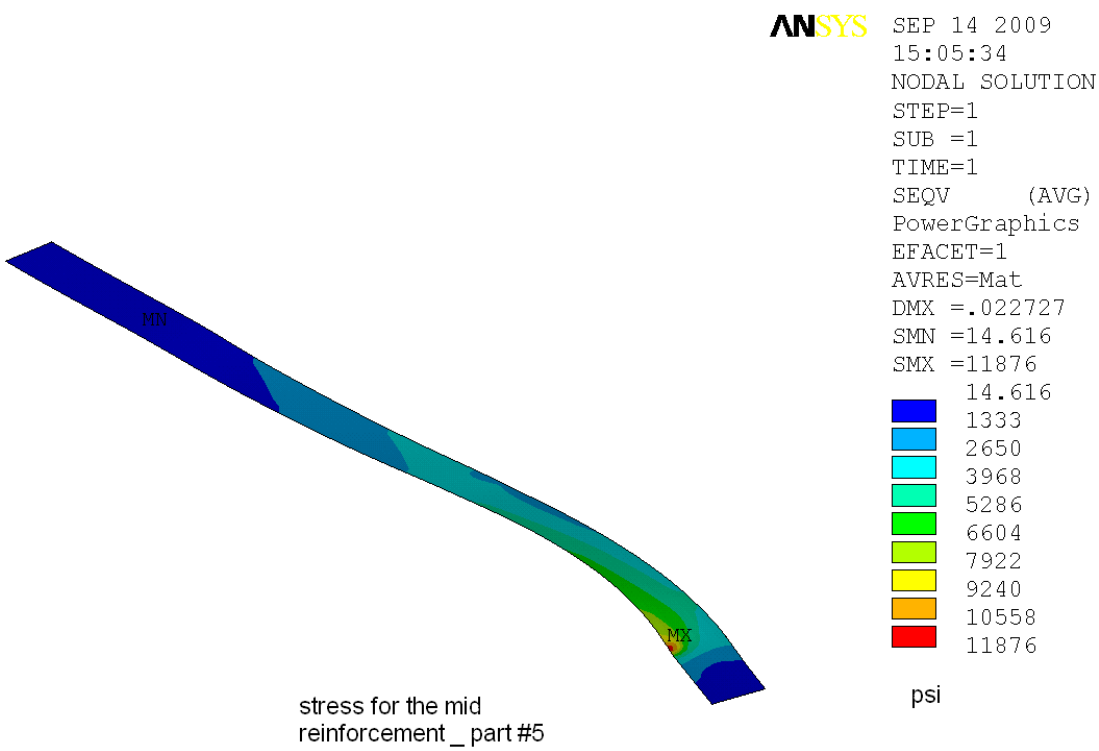

Fig 6 Stress for mid reinforcement

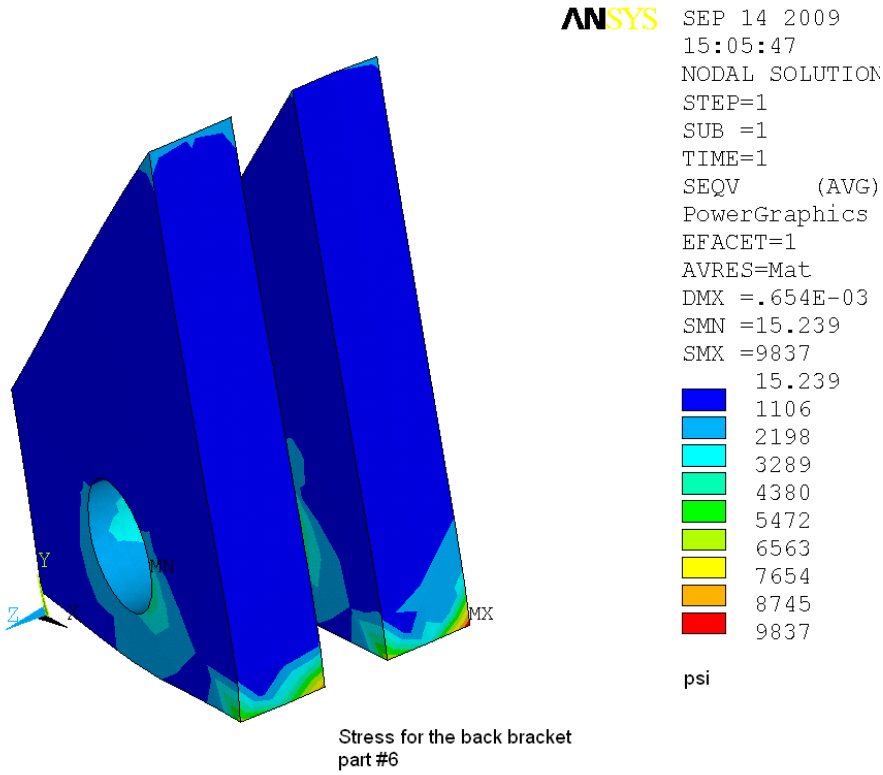

Fig 7 Stress for the back bracket

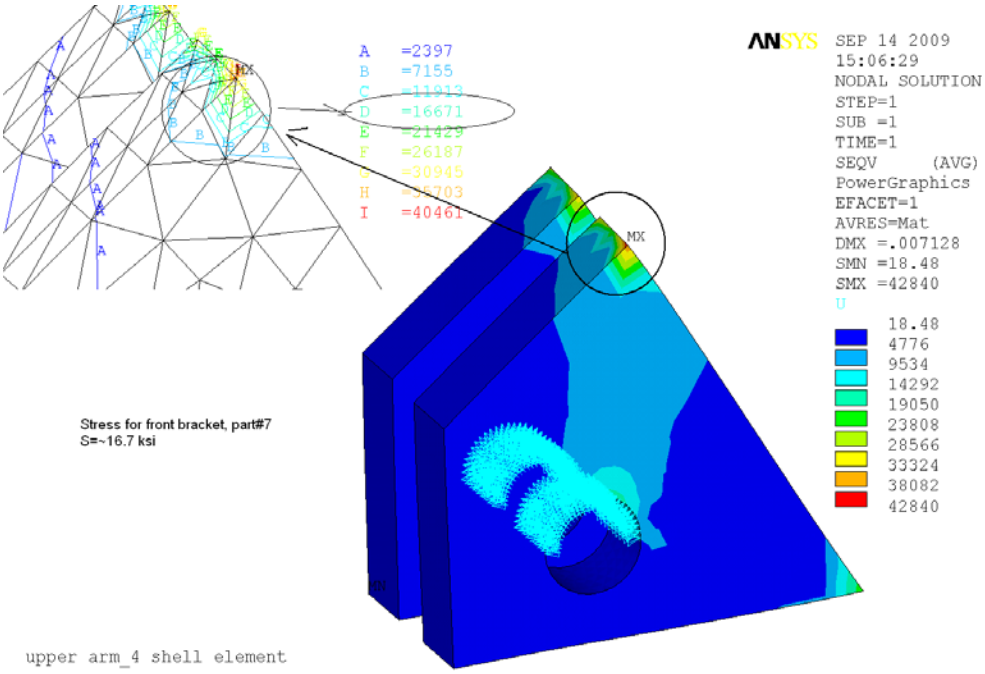

Fig 8 Stress for the front bracket

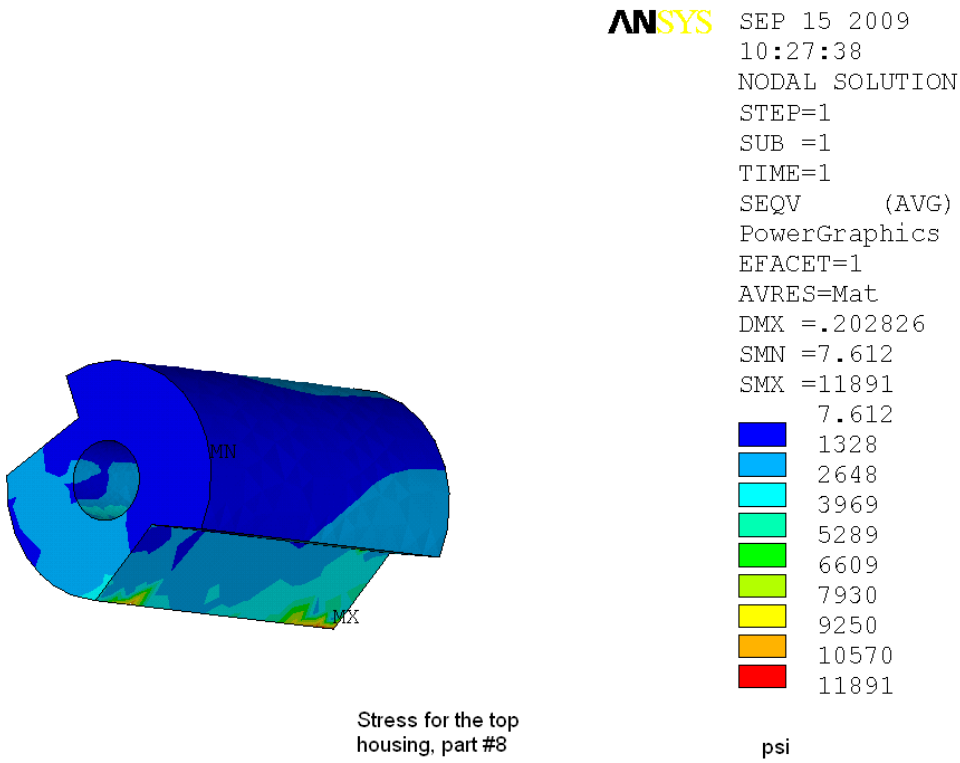

Fig 9 Stress for the top housing

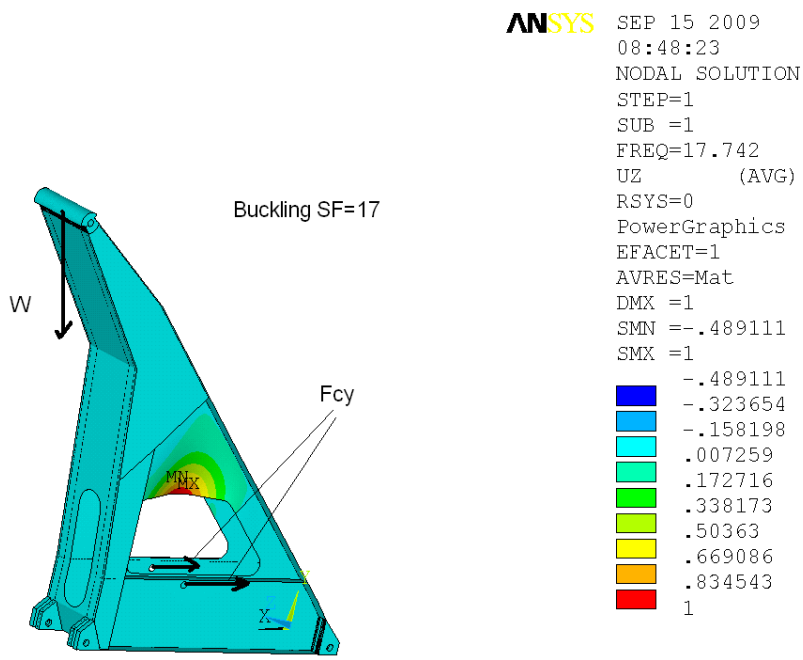

Fig 10 SF for the buckling mode

Reference

1)Ang Lee,”A Stress Analysis for the Upper Arm of the Pivot Table”,Nova-doc-3666-v1,March 20, 2009

2) Ang Lee," A Stress Analysis for a Pivot Table Used in FHEP (Nova)__v1, Nova-doc-3646-v1, March 6, 2009