Fermilab

Particle Physics Division 5/29/2001

Mechanical Department Engineering Note

Number: MD-Eng-02/011 **Date:** 1/27/03

Project: PPD Mechanical Department – MINOS Near Plane Work Platform

Project Internal Reference: N/A

Title: Work Platform

Author(s): Larry D. Spires, John Cornele and Don Arnold

Reviewer(s): Chuck Grozis, Jim Kilmer

Key Words: Work Platform, stairway

Abstract/Summary: Building a work platform which is to facilitate the testing of MNOS Near Plane Detectors and associated electronics. This work platform is to be 6' wide by 12' long.

Applicable Codes: AISC and OSHA Codes are applicable.

MINOS Work Platform

This note has been prepared to document the design and installation of a Work Platform/Deck, which is to be utilized in the New Muon Laboratory. All of the materials used for this project were secured from prior inventories around the Laboratory. After submitting a Design and Drafting Request Activity Summary to the PPD Mechanical Department Design and Drafting Group, John Voirin and the Mechanical Installation Group were asked to assist in the building of the Work Platform. John Cornele (PPD-Mechanical Installation Group) and Larry Spires (PPD-Mechanical) played key roles in the entire fabrication and installation process. Don Arnold (PPD-Mechanical Design and Drafting Group) was responsible for providing as built drawings of the Work Platform.

In early October, Jim Kilmer requested that 6' X 12' Work Platform be built in the New Muon Laboratory adjacent to the most upstream MINOS Near Plane Detectors. This platform should be 8 to 10 feet in height and capable of enduring loads of approximately 150 lbs per square foot. However, a load of 20,000 lbs have been utilized to assure that personnel and equipment safety issues have been addressed. This would allow for relay racks, other equipment and personnel to be placed on top of the platform and underneath it as well. Stairs must also accompany this structure providing they correspond to OSHA standard. Overall, the Work Platform should be built according to AISC Codes.

The following documents contains bending stress calculations (pages 2-5) for the Work Platform, OSHA guidelines for the stairway (pages 6 –7) and As-Built Drawings (Drwg. No. 9210.300-ME-397883) of the finished platform.

FERMILAB ENGINEERING NOTE	SECTION	PROJECT	SERIAL-CATEGORY	PAGE
				2

SUBJECT: PPD/MECHANICAL DEPARTMENT — MINOS NEAR PLANE WORK PLATFORM - MAIN ASSY.

NAME: L. SPIRES

DATE: 1/28/03

REVISION DATE:

BENDING STRESS / DEFLECTION / REACTION FORCE FOR DIAMOND PLATE STEEL USED AS PLATFORM FLOOR.

TABLE 26 Formulas for flat plates with straight boundaries and constant thickness

NOTATION: The notation for Table 24 applies with the following modifications: a and b refer to plate dimensions, and when used as subscripts for stress, they refer to the stresses in directions parallel to the sides a and b, respectively. σ is a bending stress which is positive when tensile on the bottom and compressive on the top if loadings are considered vertically downward. R is the reaction force per unit length normal to the plate surface exerted by the boundary support on the edge of the plate. r'_o is the equivalent radius of contact for a load concentrated on a very small area and is given by $r'_o = \sqrt{1.6r_o^2 + t^2} - 0.675t$ if $r_o < 0.5t$ and $r'_o = r_o$ if $r_o \geq 0.5t$

Case no., shape, and supports	Case no., loading	Formulas and tabulated specific values

1. Rectangular plate; all edges simply supported

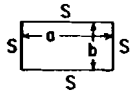

1a. Uniform over entire plate *

(At center) Max $\sigma = \sigma_b = \dfrac{\beta q b^2}{t^2}$ and max $y = \dfrac{-\alpha q b^4}{Et^3}$

(At center of long sides) Max $R = \gamma q b$

a/b	1.0	1.2	1.4	1.6	1.8	2.0	3.0	4.0	5.0	∞
β	0.2874	0.3762	0.4530	0.5172	0.5688	0.6102	0.7134	0.7410	0.7476	0.7500
α	0.0444	0.0616	0.0770	0.0906	0.1017	0.1110	0.1335	0.1400	0.1417	0.1421
γ	0.420	0.455	0.478	0.491	0.499	0.503	0.505	0.502	0.501	0.500

(Ref. 21 for $\nu = 0.3$)

1b. Uniform over small concentric circle of radius r_o (note definition of r'_o)

(At center) Max $\sigma = \dfrac{3W}{2\pi t^2}\left[(1+\nu)\ln\dfrac{2b}{\pi r'_o} + \beta\right]$

Max $y = \dfrac{-\alpha W b^2}{Et^3}$

a/b	1.0	1.2	1.4	1.6	1.8	2.0	∞
β	0.435	0.650	0.789	0.875	0.927	0.958	1.000
α	0.1267	0.1478	0.1621	0.1715	0.1770	0.1805	0.1851

(Ref. 21 for $\nu = 0.3$)

$a \geq b \quad a = 120'' \quad b = 72'' \quad a/b = 1.67$

$\therefore \beta = .5353, \ \alpha = .0945, \ \gamma = .4938$

$$q = \frac{20{,}000}{(120)(72)} \frac{\text{lbs}}{\text{in}^2} = 2.315 \ \text{lbs/in}^2$$

MAXIMUM BENDING STRESS (at Center) $\quad \text{Max } \sigma = \sigma_b = \dfrac{\beta q b^2}{t^2}$

$t = .75$ in. THICKNESS WITH STIFFNERS

$$\text{Max } \sigma = \frac{6424.114}{.5625} \frac{\text{lbs}}{\text{in}^2} = 11420.65 \frac{\text{lbs}}{\text{in}^2}$$

$$= 11.42 \frac{\text{KIPS}}{\text{in}^2} \quad \boxed{< 26.25 \text{ KSI}} \quad \text{OK}$$

CONTINUED

SUBJECT: MINOS NEAR PLANE WORK PLATFORM

NAME: L. SPIRES

DATE: 1/28/03 | REVISION DATE

MAXIMUM DEFLECTION

$$\text{MAX } y = \frac{-\alpha q b^4}{E t^3} = -\frac{.0945(2.315)(72)^4}{29000(.75)^3} \text{ in.}$$

$$= -.4805 \text{ in.}$$

MAXIMUM REACTION

$$\text{MAX } R = \gamma q b = .4938(2.315)(72)$$

$$= 82.307 \frac{\text{lbs}}{\text{in.}} = .0823 \frac{\text{KIPS}}{\text{in.}}$$

SUBJECT: MINOS NEAR PLANE WORK PLATFORM

NAME: L. SPIRES

DATE: 1/28/03 | REVISION DATE

PLATFORM FLOOR OVERHANGING ONE SUPPORT, UNIFORMLY DISTRIBUTED LOAD BETWEEN SUPPORTS

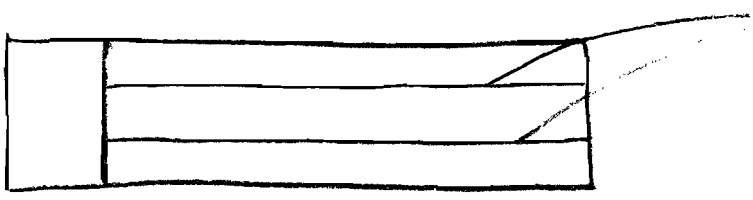

TWO I-BEAMS 6' X 3' S SHAPE

$I = 22.1 \text{ in}^4$

$\ell = 10'$

TEUL (TOTAL EQUIVALENT UNIFORM LOAD) $= w\ell = 10{,}000$ LBS (PER BEAM) ON EACH I-BEAM

$= 10$ KIPS

REACTANCE $R = V = \frac{w\ell}{2} = \frac{10 \text{ KIPS}}{2} = 5 \text{ KIPS}$

MOMENT M_{max} (at center) $= \frac{w\ell^2}{8} = 150 \text{ KIPS} \cdot \text{in}$

DEFLECTION Δ_{max} (at center) $= \frac{5 w \ell^4}{384 E I} = \frac{5(10)(120)^3}{384(29000)(22.1)}$ in.

$= .344$ in.

SECTION MODULUS $S = \frac{M_{max}}{F_b}$

FOR S SHAPE I BEAM (S6) $S = 7.37 \text{ in}^3$

$F_b = \frac{150 \text{ KIPS} \cdot \text{in}}{7.37 \text{ in}^3} = 20.35$ KSI

$< F_b = .75 F_y = .75(\underline{50 \text{ KSI}}) = 37.5$ KSI

OR $< F_b = .75 F_y = .75(\underline{36 \text{ KSI}}) = 27$ KSI

SUBJECT: MINOS NEAR PLANE WORK PLATFORM

NAME: L. SPIRES

DATE: 1/28/03 | REVISION DATE:

PLATFORM FLOOR PLUS IBEAMS UNIFORMLY DISTRIBUTED ON 4 LEGS.

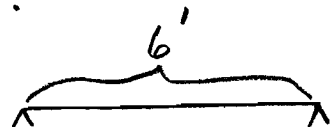

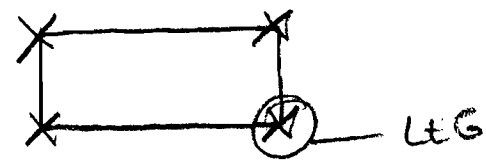

$T_{ELL} = wl = 5{,}000 \text{ lbs} = 5 \text{ KIPS}$
ON EACH LEG
(4 LEGS)

$R = V = \frac{wl}{2} = 2.5 \text{ KIPS}$ $\qquad l = 6' = 72''$

M_{MAX} (at center) $= \frac{wl^2}{8} = 2.5 \text{ KIPS}\left(\frac{72}{4} \text{ in.}\right)$
$= 45 \text{ KIPS} \cdot \text{in}$

Δ_{max} (at center) $= \frac{5\,wl^4}{384\,EI} = \frac{5(5)(72)^3}{384(29000)(22.1)}$ in.
$= .0379$ in.

$F_b = \frac{45}{7.37}$ KSI $= 6.106$ KSI $\quad$ OK

1910.24(d)

"Stair width." Fixed stairways shall have a minimum width of 22 inches.

1910.24(e)

"Angle of stairway rise." Fixed stairs shall be installed at angles to the horizontal of between 30 deg. and 50 deg. Any uniform combination of rise/tread dimensions may be used that will result in a stairway at an angle to the horizontal within the permissible range. Table D-1 gives rise/tread dimensions which will produce a stairway within the permissible range, stating the angle to the horizontal produced by each combination. However, the rise/tread combinations are not limited to those given in Table D-1.

Table D-1

Angle to horizontal	Rise (in inches)	Tread run (in inches)
30 deg. 35'	6 1/2	11
32 deg. 08'	6 3/4	10 3/4
33 deg. 41'	7	10 1/2
35 deg. 16'	7 1/4	10 1/4
36 deg. 52'	7 1/2	10
38 deg. 29'	7 3/4	9 3/4
40 deg. 08'	8	9 1/2
41 deg. 44'	8 1/4	9 1/4
43 deg. 22'	8 1/2	9
45 deg. 00'	8 3/4	8 3/4
46 deg. 38'	9	8 1/2
48 deg. 16'	9 1/4	8 1/4
49 deg. 54'	9 1/2	8

THE STAIRS USED IN THIS PROJECT HAVE A RISE OF 8.25 in. AND A RUN OF 9.25 in. RISING AT AN ANGLE OF APPROX. 42 DEGREES, THE STAIRWAY IS 24" WIDE.

..1910.24(f)

1910.24(f)

"Stair treads." All treads shall be reasonably slip-resistant and the nosings shall be of nonslip finish. Welded bar grating treads without nosings are acceptable providing the leading edge can be readily identified by personnel descending the stairway and provided the tread is serrated or is of definite nonslip design. Rise height and tread width shall be uniform throughout any flight of stairs including any foundation structure used as one or more treads of the stairs.

1910.24(g)

"Stairway platforms." Stairway platforms shall be no less than the width of a stairway and a minimum of 30 inches in length measured in the direction of travel.

1910.24(h)

"Railings and handrails." Standard railings shall be provided on the open sides of all exposed stairways and stair platforms. Handrails shall be provided on at least one side of closed stairways preferably on the right side descending. Stair railings and handrails shall be installed in accordance with the provisions of 1910.23.

RAILINGS AND HANDRAILS FOR THE PLATFORM AND STAIRWAY HAVE BEEN INSTALLED ACCORDING TO OSHA PROVISION 1910.23. KICK PLATES HAVE ALSO BEEN INSTALLED AROUND THE PLATFORM AREA.

REV	DESCRIPTION	DRAWN	DATE
		APPROVED	DATE

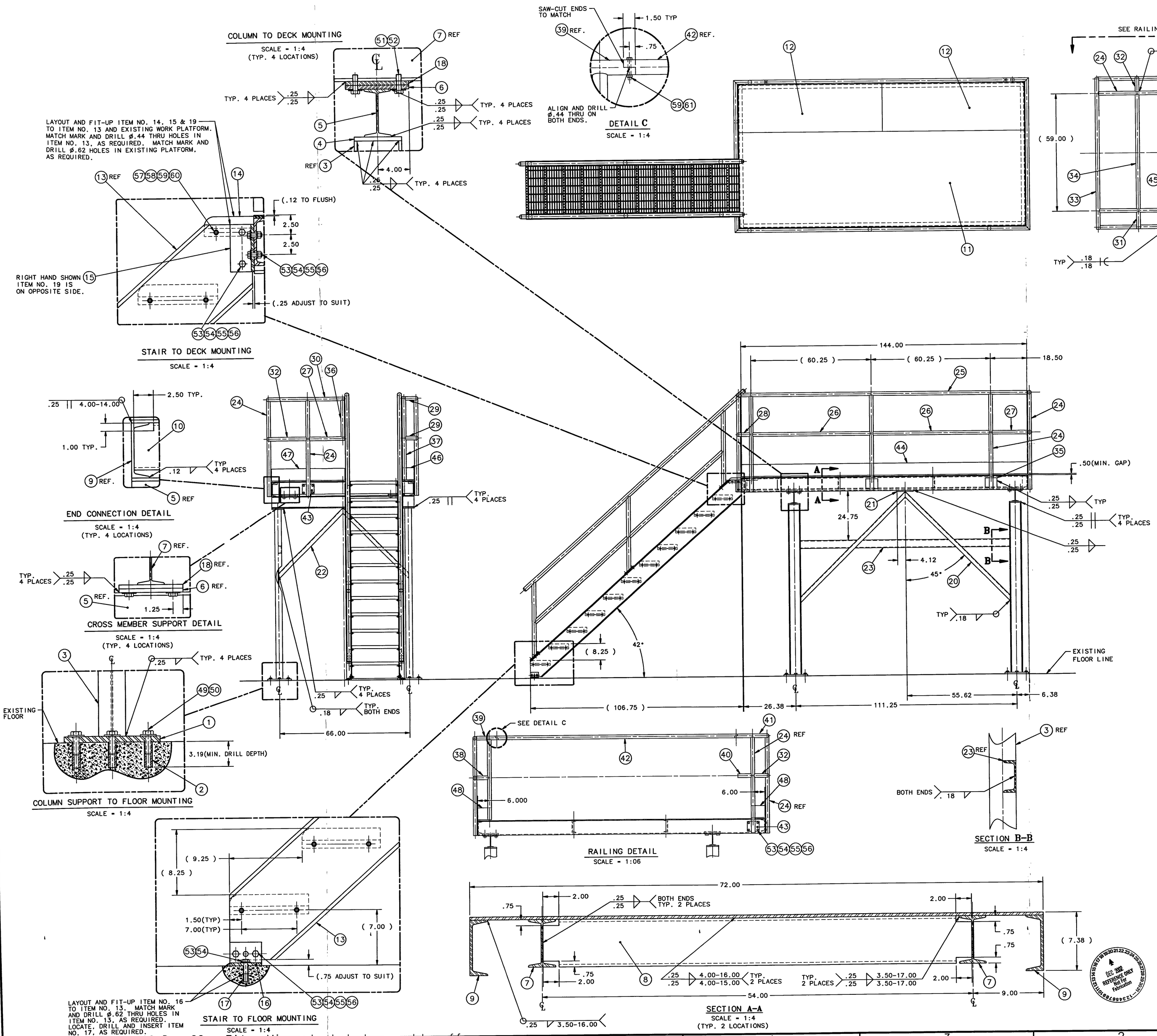

ITEM	PART NO.	DESCRIPTION OR SIZE	QTY.
61	COML	HEX HD. CAP SCREW, ø.375-16 UNC X 2.50 LG.; GRADE 8 ALLOY STEEL	2
60	COML	LOCK WASHER, ø.375 SCREW; PLAIN STEEL	12
59	COML	HEX NUT, ø.375-16 UNC; GRADE 8 ALLOY STEEL	14
58	COML	SPLIT LOCK WASHER, ø.375 SCREW; PLAIN STEEL	14
57	COML	HEX HD. CAP SCREW, ø.375-16 UNC X 1.00 LG.; GRADE 8 ALLOY STEEL	14
56	COML	LOCK WASHER, ø.500 SCREW; PLAIN STEEL	28
55	COML	HEX NUT, ø.500-13 UNC; GRADE 8 ALLOY STEEL	28
54	COML	SPLIT LOCK WASHER, ø.500 SCREW; PLAIN STEEL	30
53	COML	HEX HD. CAP SCREW, ø.500-13 UNC X 1.50 LG.; GRADE 8 ALLOY STEEL	30
52	COML	SPLIT LOCK WASHER, ø.750 SCREW; PLAIN STEEL	16
51	COML	HEX HD. CAP SCREW, ø.625-11 UNC X 2.00 LG.; GRADE 8 ALLOY STEEL	16
50	COML	FLAT WASHER, ø.750 SCREW; PLAIN STEEL	16
49	COML	HEX HD. CAP SCREW, ø.750--10 UNC X 2.50 LG.; GRADE 8 ALLOY STEEL	16
48	COML	PLATE, .25 THK. X 6.00 X 7.25 LG.; ASTM A36	2
47	COML	PLATE, .25 THK. X 6.00 X 37.75 LG.; ASTM A36	1
46	COML	PLATE, .25 THK. X 6.00 X 5.50 LG.; ASTM A36	1
45	COML	PLATE, .25 THK. X 6.00 X 72.00 LG.; ASTM A36	1
44	COML	PLATE, .25 THK. X 6.00 X 144.75 LG.; ASTM A36	1
43	MC-397884	RAILING SUPPORT PLATE	4
42	COML	PIPE, ø1.50 NOM. X SCH. 40 X 121.50 LG.; CARBON STEEL (CUT ENDS TO SUIT)	1
41	COML	PIPE, ø1.50 NOM. X SCH. 40 X 17.25 LG.; CARBON STEEL (CUT ENDS TO SUIT)	1
40	COML	PIPE, ø1.50 NOM. X SCH. 40 X 7.50 LG.; CARBON STEEL (CUT ENDS TO SUIT)	1
39	COML	PIPE, ø1.50 NOM. X SCH. 40 X 11.00 LG.; CARBON STEEL (CUT ENDS TO SUIT)	1
38	COML	PIPE, ø1.50 NOM. X SCH. 40 X 6.50 LG.; CARBON STEEL (CUT ENDS TO SUIT)	1
37	COML	PIPE, ø1.50 NOM. X SCH. 40 X 42.50 LG.; CARBON STEEL (CUT ENDS TO SUIT)	2
36	COML	PIPE, ø1.50 NOM. X SCH. 40 X 18.25 LG.; CARBON STEEL (CUT ENDS TO SUIT)	1
35	COML	PLATE, .38 THK. X 5.00 X 6.00; ASTM A36	3
34	COML	PIPE, ø1.50 NOM. X SCH. 40 X 59.00 LG.; CARBON STEEL (CUT ENDS TO SUIT)	1
33	COML	PIPE, ø1.50 NOM. X SCH. 40 X 76.50 LG.; CARBON STEEL (CUT ENDS TO SUIT)	1
32	COML	PIPE, ø1.50 NOM. X SCH. 40 X 8.25 LG.; CARBON STEEL (CUT ENDS TO SUIT)	2
31	COML	PIPE, ø1.50 NOM. X SCH. 40 X 9.25 LG.; CARBON STEEL (CUT ENDS TO SUIT)	1
30	COML	PIPE, ø1.50 NOM. X SCH. 40 X 39.00 LG.; CARBON STEEL (CUT ENDS TO SUIT)	1
29	COML	PIPE, ø1.50 NOM. X SCH. 40 X 6.00 LG.; CARBON STEEL (CUT ENDS TO SUIT)	2
28	COML	PIPE, ø1.50 NOM. X SCH. 40 X 7.00 LG.; CARBON STEEL (CUT ENDS TO SUIT)	1
27	COML	PIPE, ø1.50 NOM. X SCH. 40 X 18.75 LG.; CARBON STEEL (CUT ENDS TO SUIT)	1
26	COML	PIPE, ø1.50 NOM. X SCH. 40 X 60.00 LG.; CARBON STEEL (CUT ENDS TO SUIT)	2
25	COML	PIPE, ø1.50 NOM. X SCH. 40 X 146.50 LG.; CARBON STEEL (CUT ENDS TO SUIT)	1
24	COML	PIPE, ø1.50 NOM. X SCH. 40 X 49.00 LG.; CARBON STEEL (CUT ENDS TO SUIT)	7
23	COML	C4 X 5.4 X 105.25 LG.; ASTM A36	1
22	COML	ANGLE, 3.00 X 2.00 X .188 THK. X 48.50 LG ASTM A36 (CUT ENDS TO SUIT)	4
21	COML	PLATE, .50 THK. X 8.25 X 10.00; ASTM A36	1
20	COML	ANGLE, 3.00 X 2.00 X .188 THK. X 76.00 LG.; ASTM A36 (CUT ENDS TO SUIT)	2
19	MC-397878	STAIR TOP SUPPORT ANGLE-LH	1
18	MC-397876	CROSS MEMBER SUPPORT PLATE W/THD.	4
17	FNAL P/N 1204-113000	HILTI HDI 1/2" DROP-IN ANCHOR, P/N 000457549 OR EQ.; CARBON STEEL	2
16	MC-397877	STAIR BOTTOM SUPPORT ANGLE	2
15	MC-397879	STAIR TOP SUPPORT ANGLE-RH	1
14	COML	WELDED STAIR TREAD W/CHECKERED PLATE NOSING; 6.250 TREAD WIDTH X 24.00 LG.	1
13	MD-397882	STAIR ASSEMBLY	1
12	COML	PLATE, INLAND FOUR WAY, MEDIUM PATTERN; .375 THK. X 24.00 X 144.00 LG.; LOW CARBON STEEL.	2
11	COML	PLATE, INLAND FOUR WAY, MEDIUM PATTERN; .375 THK. X 48.00 X 144.00 LG.; LOW CARBON STEEL.	1
10	COML	C6 X 10.5 X 71.38 LG. ASTM A36	2
9	COML	C7 X 12.25 X 144.00 LG. ASTM A36	2
8	COML	C6 X 8.2 X 53.75 LG. ASTM A36	2
7	COML	S6 X 12.5 X 138.75 LG. ASTM A36	2
6	MC-397875	CROSS MEMBER SUPPORT PLATE	8
5	COML	S6 X 12.5 X 72.00 LG. ASTM A36	2
4	COML	PLATE, .50 THK. X 6.00 X 6.00; ASTM A36	4
3	COML	S6 X 12.5 X 85.50 LG. ASTM A36	4
2	COML	HILTI HDI 3/4" DROP-IN ANCHOR, P/N 000457564 OR EQ.; CARBON STEEL	16
1	MC-397874	BASE MOUNTING PLATE	4

PARTS LIST

UNLESS OTHERWISE SPECIFIED			ORIGINATOR	L.SPIRES	20-NOV-2002
.XX	.XXX	ANGLES	DRAWN	D.ARNOLD	17-DEC-2002
± .02	± ---	± 1°	CHECKED		
			APPROVED		
			USED ON		
			MATERIAL	SEE PARTS LIST ABOVE	

1. BREAK ALL SHARP EDGES .015 MAX.
2. DO NOT SCALE DRAWING.
3. DIMENSIONS BASED UPON ANSI Y14.5M-1982
4. ALL DIMENSIONS ARE INCHES
5. MAX. ALL MACH. SURFACES 125

FERMI NATIONAL ACCELERATOR LABORATORY
UNITED STATES DEPARTMENT OF ENERGY

PPD/MECHANICAL DEPARTMENT
MINOS NEAR PLANE WORK PLATFORM
MAIN ASSEMBLY

SCALE	DRAWING NUMBER	SHEET	REV
1:8 & NOTED	9210.300-ME-397883	1 OF 1	

CREATED WITH : Ideas8m4 GROUP: PPD/MECHANICAL DEPARTMENT