REV.	DESCRIPTION	DRAWN / APPROVLD	DATE / DATE
A	ADDED ITEMS 25,26,26,27 & 28 rw	RLW / A.SM..S.	9/20/93 / 9/20/93
B	ITEM #4 9211.550-MD-327216 WAS 9211.55-MD-285817. ITEMS 14 AND #29 THRU #38 HAS BEEN ADDED TO THE BOM & HAS BEEN ADDED SCHEMATICALLY TO ALL FOUR VIEWS. QUANITY ON ITEMS 27 & 28 WAS 16.	RLW / JER	2/94 / 4MAR94
C	ADDED MIRROR ASSEMBLY, ITEM #9 9211.550-ME-285893	RLW / [illegible]	11/7/96 / 11-13-96

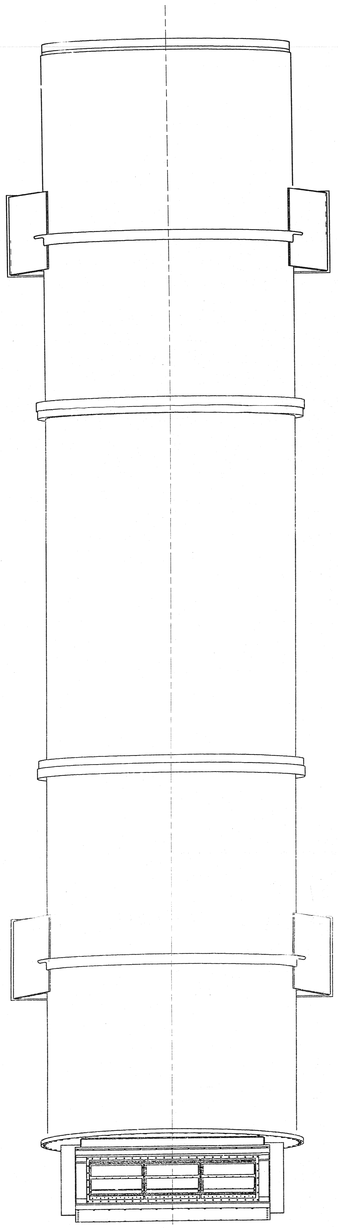

ITEMS 8,14,26,27 & 28 OMITTED IN THIS VIEW

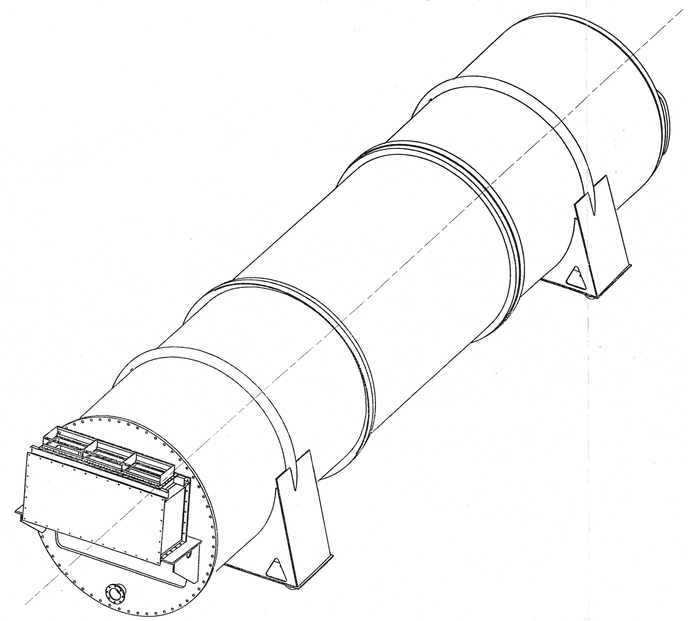

ITEMS 8,14,26,27 & 28 OMITTED IN THIS VIEW

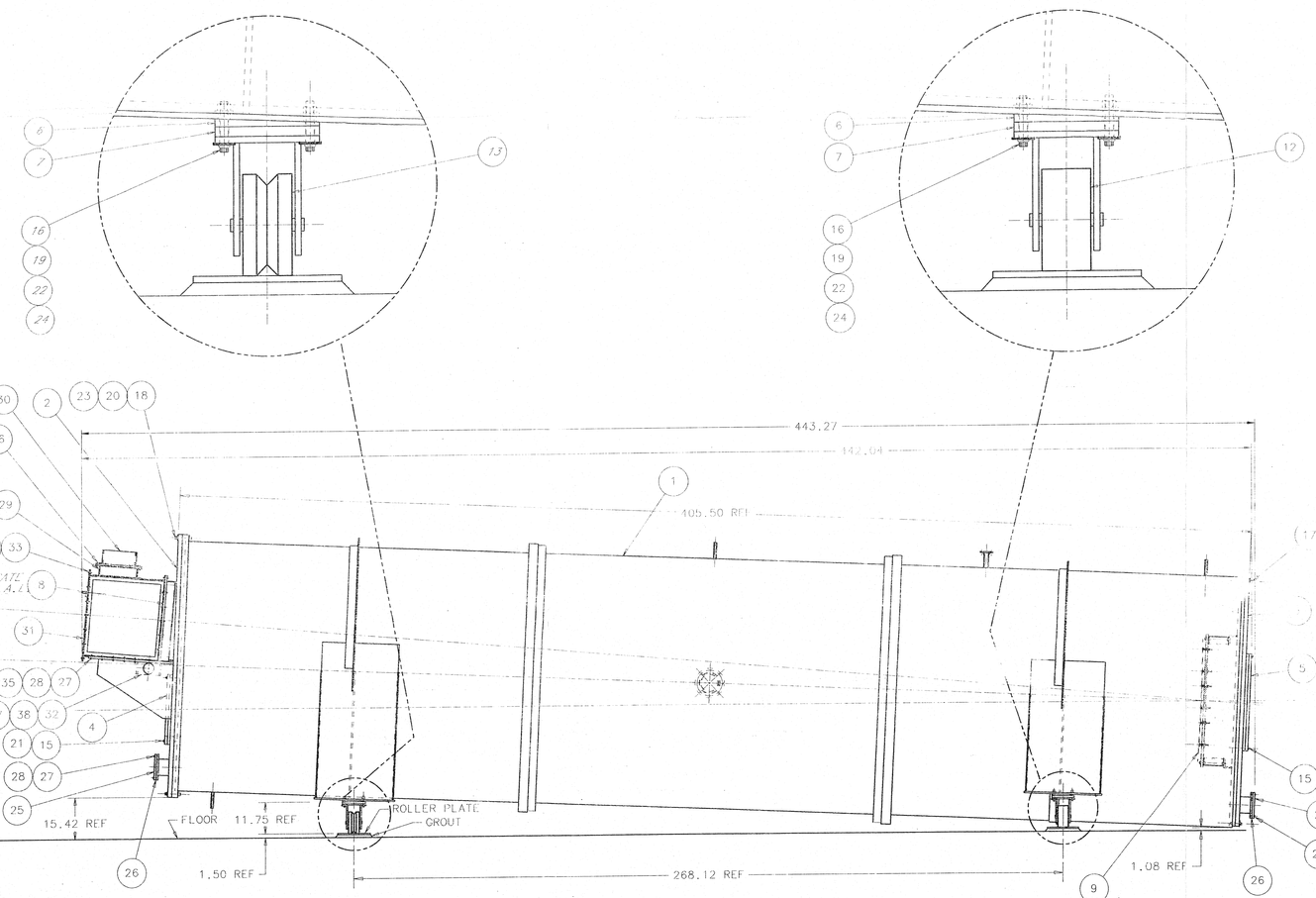

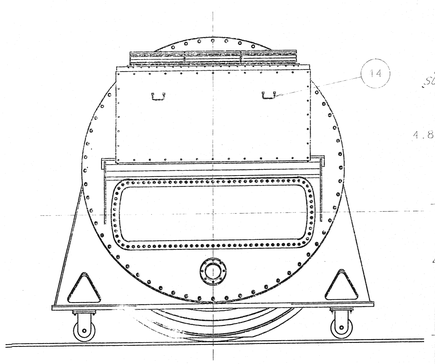

ITEMS 8,26,27,28,33,34,35,36,&38 OMITTED IN THIS VIEW

BEAM DIRECTION

ITEM NO.	PART NO.	DESCRIPTION OR SIZE	QTY. REQ.
38	FERMI STK.NO. 1226-0500	1/4-20 UNC-2A X 1/2 LG. HEX HD.CAPSCREW,TYPE 18-8 SS	12
37	FERMI STK.NO. 1218-0620	1/4 FLAT WASHERS-18-8 SS	136
36	FERMI STK.NO. 1210-0660	1/4-20 UNC-2B NUT,HEX.-TYPE 18-8 SS	56
35	FERMI STK.NO. 1210-0710	3/8-16 UNC-2B NUT,HEX.-TYPE 18-8 SS	69
34	FERMI STK.NO. 1226-0515	1/4-20 UNC-2A X 1 1/4LG. HEX HD CAPSCREW-TYPE 18-8 SS	68
33	FERMI STK.NO. 1226-0585	3/8-16 UNC 2A X 1"LG.HEX HD CAPSCREW-TYPE 18-8 SS	36
32	9211.150-MC-327225	COVER,DUCT	1
31	9211.550-MD-285828	COVER,ELECTRONIC BOX	1
30	3781-MD-241061	CONNECTOR CRATE ASSEMBLY	1
29	ME-327208	ELECTRONIC BOX	1
28		3/8 FLAT WASHER-STEEL	190
27		3/8-16 UNC-2A X1 1/2"LG. HEX HD.CAPSCREW-STEEL	51
26		1/8" O-RING-BUNA-N	2
25	MD-327036	BLANKOFF	2
24		5/8 BEVEL WASHER-STEEL	16
23		7/8 FLAT WASHERS-STEEL	120
22		5/8 FLAT WASHERS-STEEL	16
21		1/2 FLAT WASHERS-STEEL	106
20		7/8 -9 UNRC-2B HEX HD.NUT STEEL	60
19		5/8 -11 UNRC-2B HEX HD.NUT STEEL	16
18		7/8-9 UNRC-2A X 5"LG. FERRY HD.CAPSCREW-STEEL	60
17		7/8-9 UNRC-2A X 2 1/4"LG. FERRY HD.CAPSCREW-STEEL	50
16		5/8 11 UNRC-2A X 3 1/2"LG. FERRY HD.CAPSCREW-STEEL	16
15		1/2-13 UNRC-2A X 3"LG. FERRY HD.CAPSCREW-STEEL	106
14	COM'L.	HANDLES,PART NO A-61120-3/8-24-G GLOBE ELECTRONIC HARDWARE INC.	2
13	COM'L.	125 SERIES MODEL 125-VFR-0840-R RWM CASTER,V-GROOVE FORGED STEEL	2
12	COM'L.	125 SERIES MODEL 125-CIR-0840-R RWM CASTER,FLAT FORGED STEEL	2
11		Ø1/4"O-RING MATL:BUNA-N LENGTH TO SUIT	2
10		Ø1/2"O-RING MATL:BUNA-N LENGTH TO SUIT	2
9	9211.550-ME-285823	MIRROR ASSEMBLY	1
8	ME-285771	PHOTOTUBE PLATE	1
7	9211.600-MC-285969	SHIM,3/4"	4
6	9211.600-MC-285968	SHIM,ANGLED	4
5	9211.550-MD-285820	WINDOW ASSEMBLY,DOWNSTREAM	1
4	9211.550-MD-285819	WINDOW ASSEMBLY,UPSTREAM MODIFIED	1
3	9211.550-ME-285815	COVERPLATE,DOWNSTREAM	1
2	9211.550-ME-327216	COVERPLATE MODIFICATIONS	1
1	9211.600-ME-285812	VESSEL WELDMENT	1

PARTS LIST

UNLESS OTHERWISE SPECIFIED			ORIGINATOR	A.SZYMULANSKI	2-10-93
.XX	.XXX	ANGLES	DRAWN	R.L.WILLIAMS	2-11-93
±	±	±	CHECKED	J.RAUCH	6-25-93
			APPROVED	A.SZYMULANSKI & L.STUTTE	6-28-93

1. BREAK ALL SHARP EDGES .015 MAX.
2. DO NOT SCALE DRWG.
3. DIMENSIONING IN ACCORD WITH ANSI Y14.5M-1982 STD'S
4. ALL DIMENSIONS ARE IN INCHES.

√ MAX. ALL MACHINED SURFACES

USED ON 9220.781-ME-327108

MATERIAL SEE PARTS LIST

AUG 2002 REFERENCE ONLY Not for Fabrication

FERMI NATIONAL ACCELERATOR LABORATORY
UNITED STATES DEPARTMENT OF ENERGY

RD/MECHANICAL SUPPORT DEPT.
CERENKOV COUNTER
CERENKOV MAIN ASSEMBLY-E781 RICH

SCALE	DRAWING NUMBER	SHEET NO.	REV.
NONE	9213.150-ME-285811	1 OF 1	C