Fermilab

Particle Physics Division
Mechanical Department Engineering Note

Number: MD-ENG-03-016 Date:SEPT 11, 2003

Project Internal Reference:

Project: NUMI

Title: TARGET/BAFFLE

Author(s): E.M. VILLEGAS

Reviewer(s): 9-23-03

Key Words: TGT/BAFFLE, HOOKS, WELDS, FASTENERS
FINITE ELEMENTS ANALYSIS

Abstract Summary: ANALYSIS SHOWING WELD SIZES,BOLT SIZES AND A SYNOPSIS OF FEA RESULTS FOR KEY ELEMENTS OF THE TGT/BAFFLE ASSY.

Applicable Codes:

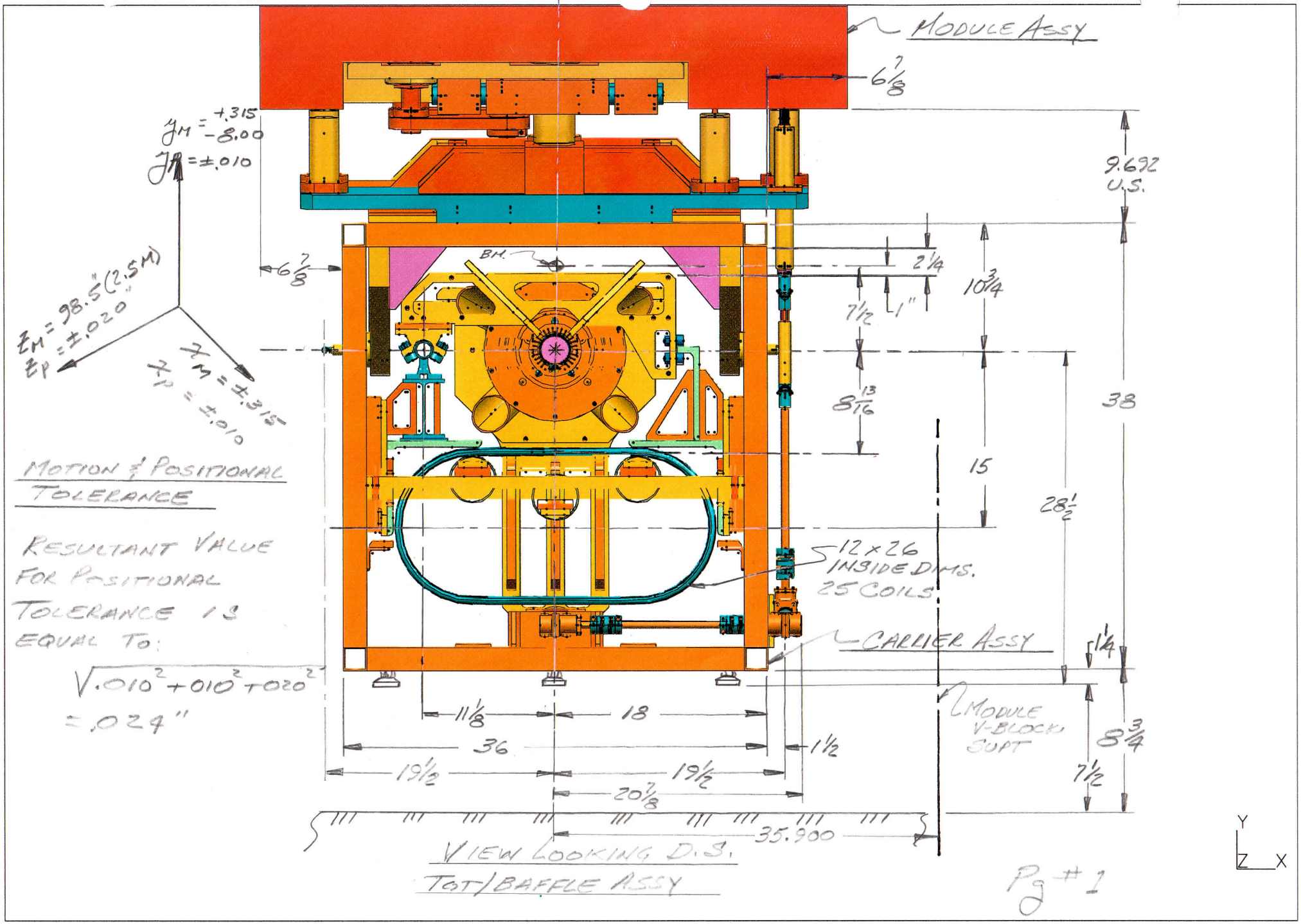

MOTION & POSITIONAL TOLERANCE

RESULTANT VALUE FOR POSITIONAL TOLERANCE IS EQUAL TO:

$$\sqrt{.010^2 + .010^2 + .020^2} = .024''$$

VIEW LOOKING D.S.
TGT/BAFFLE ASSY

Pg #1

Plotted by villegas on 02-Sep-03 , File: generic.pff

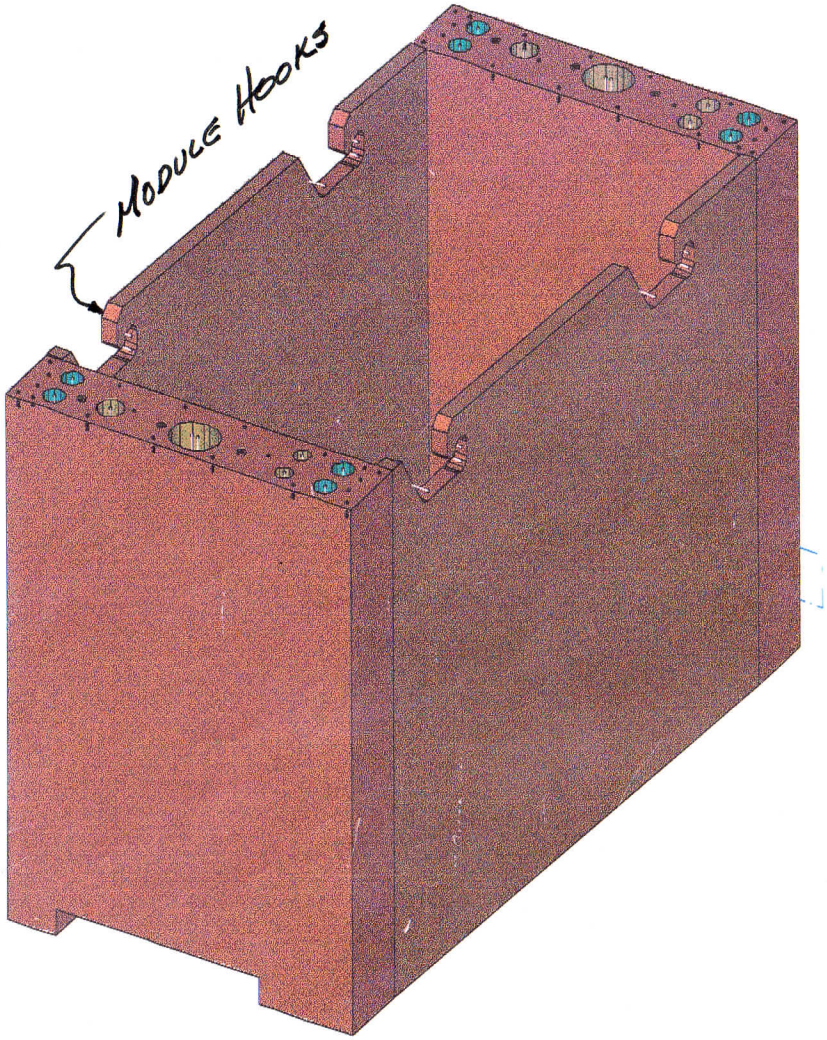

WT. BREAKDOWN

TGT MODULE _____ 28,150#

SHAFT & COMPONENTS _____ 5,450

TGT CARRIER ASSY _____ 1,225

SUBTOTAL _ 34,825

SAY 17.50 TON

FIXTURE, LIFTING ___ 1,500 (.75 TON)

PICK LOADS FOR FIXTURE

17.50 TON + .75 TON = 18.25 TON

LOAD FOR HOOK ANALYSIS

18.25/3 PT. PICK = 6.08 TON = 12,167#

NOTE: FIXTURE IS DESIGNED TO PICK 15 TON/PIN

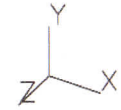

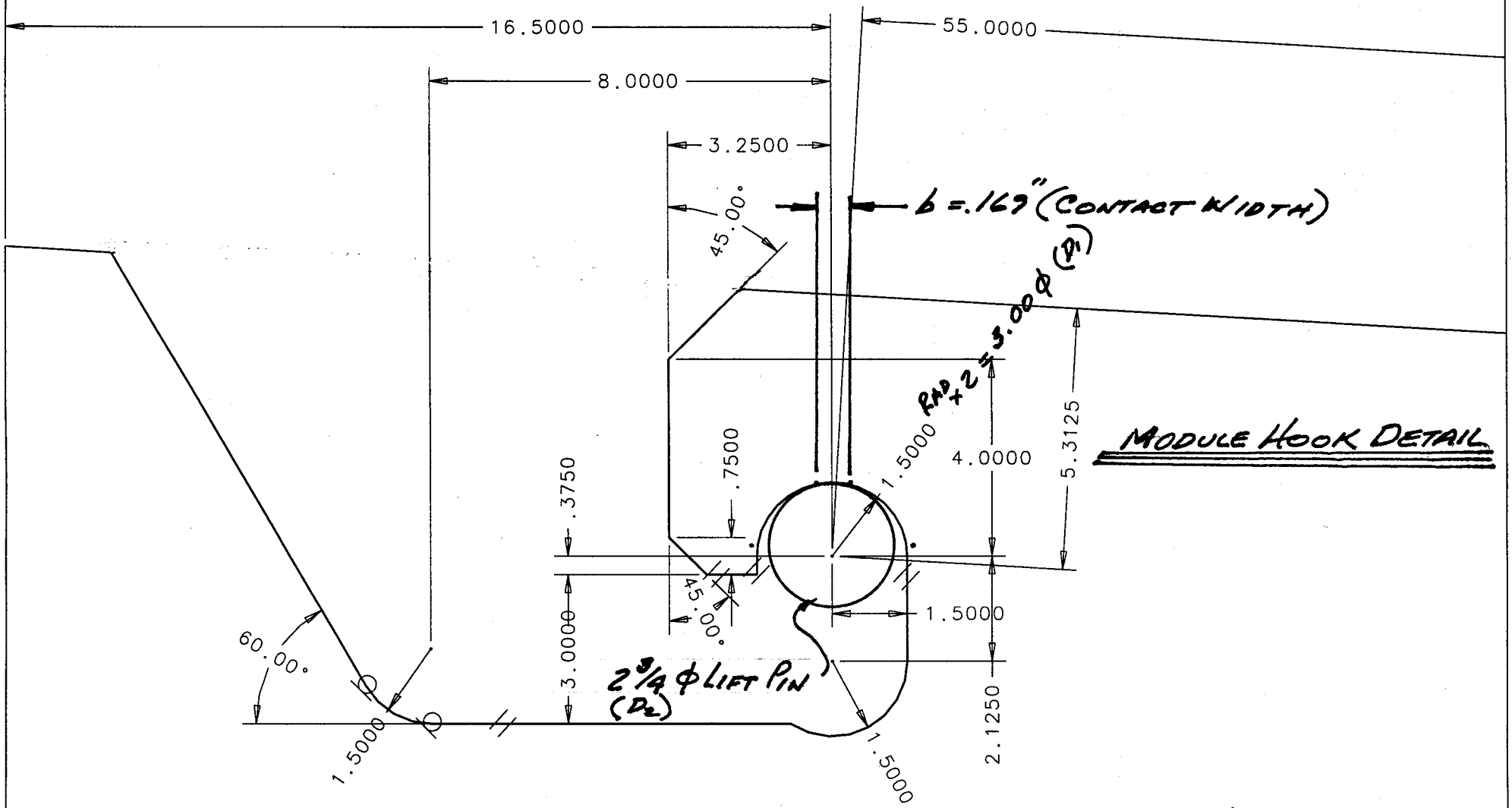

CONTACT WIDTH (REF.: ROARK, 4TH Ed. Pg 320, CASE #6)

$$b = 2.15\sqrt{\frac{p\,D_1 D_2}{E(D_1 - D_2)}}$$

$= .169''$

where $D_1 = 3''\phi$

$D_2 = 2\,3/4''\phi$ (PIN ON FIXTURE)

$p = 12{,}167\#/2.25''$ THICK

$= 5408\#/IN$

$E = 29 \times 10^6$ psi (ASTM A36 STL.)

Pg #2

Y
Z X

RESULTS: 2- B.C. 1,STRESS_2,LOAD SET 1
STRESS - Y MIN:-9.57E+03 MAX: 6.80E+03
DEFORMATION: 1- B.C. 1,DISPLACEMENT_1,LOAD SET 1
DISPLACEMENT - MAG MIN: 4.40E-04 MAX: 2.46E-03
FRAME OF REF: PART

VALUE OPTION:ACTUAL

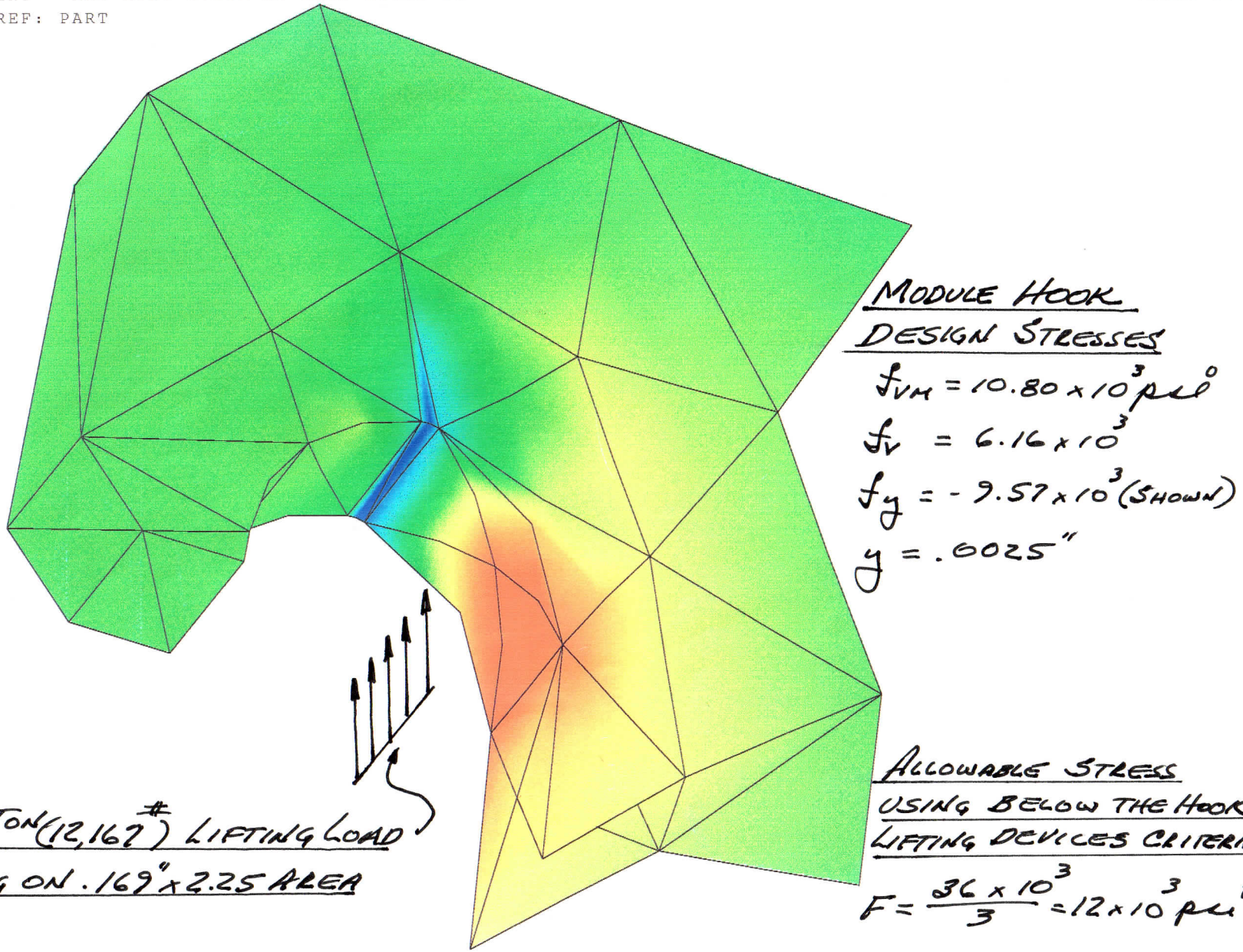

MODULE HOOK
DESIGN STRESSES

$f_{VM} = 10.80 \times 10^3$ psi

$f_v = 6.16 \times 10^3$

$f_y = -9.57 \times 10^3$ (SHOWN)

$y = .0025''$

6.08 TON (12,167 #) LIFTING LOAD
ACTING ON .169" x 2.25 AREA

ALLOWABLE STRESS
USING BELOW THE HOOK
LIFTING DEVICES CRITERIA.

$F = \frac{36 \times 10^3}{3} = 12 \times 10^3$ psi

FERMILAB
ENGINEERING NOTE

SECTION	PROJECT	SERIAL-CATEGORY	PAGE
			4

SUBJECT: TGT/BAFFLE MODULE WELD REQUIREMENTS

NAME: E.M. Villegas

DATE: 10/30/02 REVISION DATE: 12/16/02

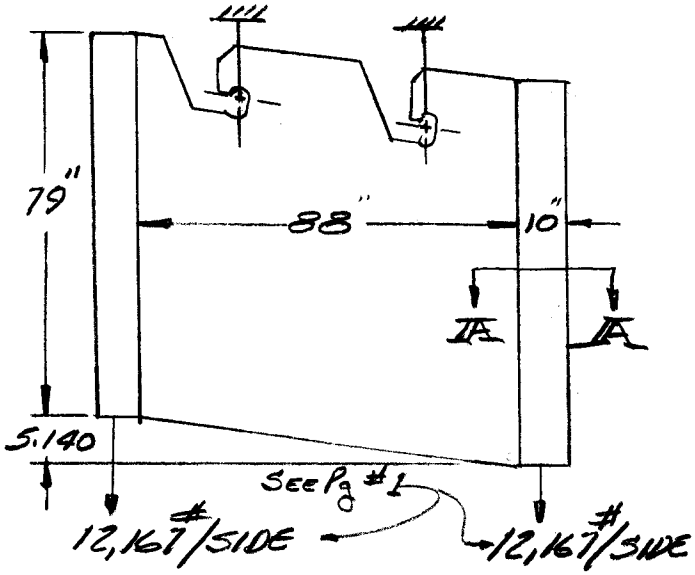

TOTAL WT = 17.50 TON

MATERIAL: ASTM A36 STEEL

WELD METAL: E6010 OR BETTER

TYPE WELDS:

PARTIAL PENETRATION GROOVE

$$t_e = \sqrt{\frac{2 \cdot 25}{6}} = .612''$$

FILLET WELD

$$t_e = \frac{5}{8} \text{ (BASED ON THICKER PLATE)}$$

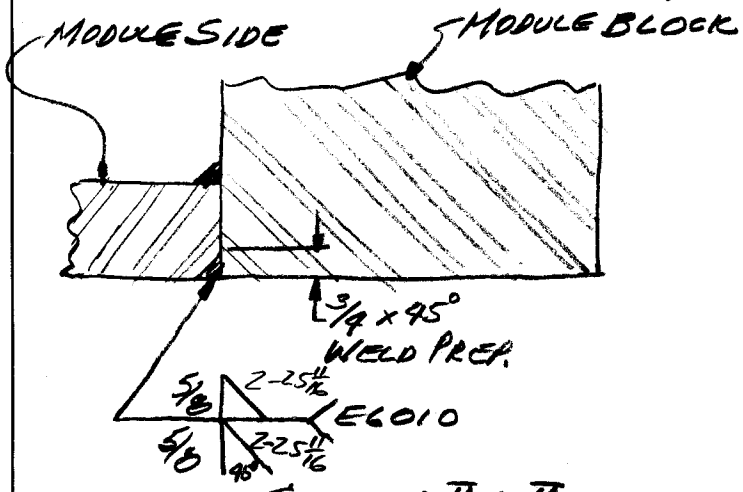

SECTION A-A

ALLOWABLE STRESS

$$F = 0.3 \times 62 \times 10^3 = 18{,}600 \text{ psi}$$
(E6010)

ALLOWABLE WELD STRENGTH PER UNIT LENGTH

$$F_W = .625F = 11{,}625 \text{ \#/IN}$$

FORCE PER UNIT LENGTH

$$f_w = \frac{12{,}167\#}{2 \text{ WELD} \times 79''} = 77 \text{ \#/IN}$$

REQ'D LEG SIZE FOR CONTINUOUS WELD

$$w = \frac{f_w}{F_w} = \frac{77}{11{,}625} = .007$$

USING 5/8 FILLET/GROOVE WELD, 2' LONG & 25/16 CTR TO CTR YIELDS: 2-25/16, 2-25/16 WITH AN ALLOWABLE LOAD CARRYING CAPACITY OF

$$8 \text{ WELD} \times 2'' \times 11{,}625\# = 186 \times 10^3\# > 12{,}167\#$$

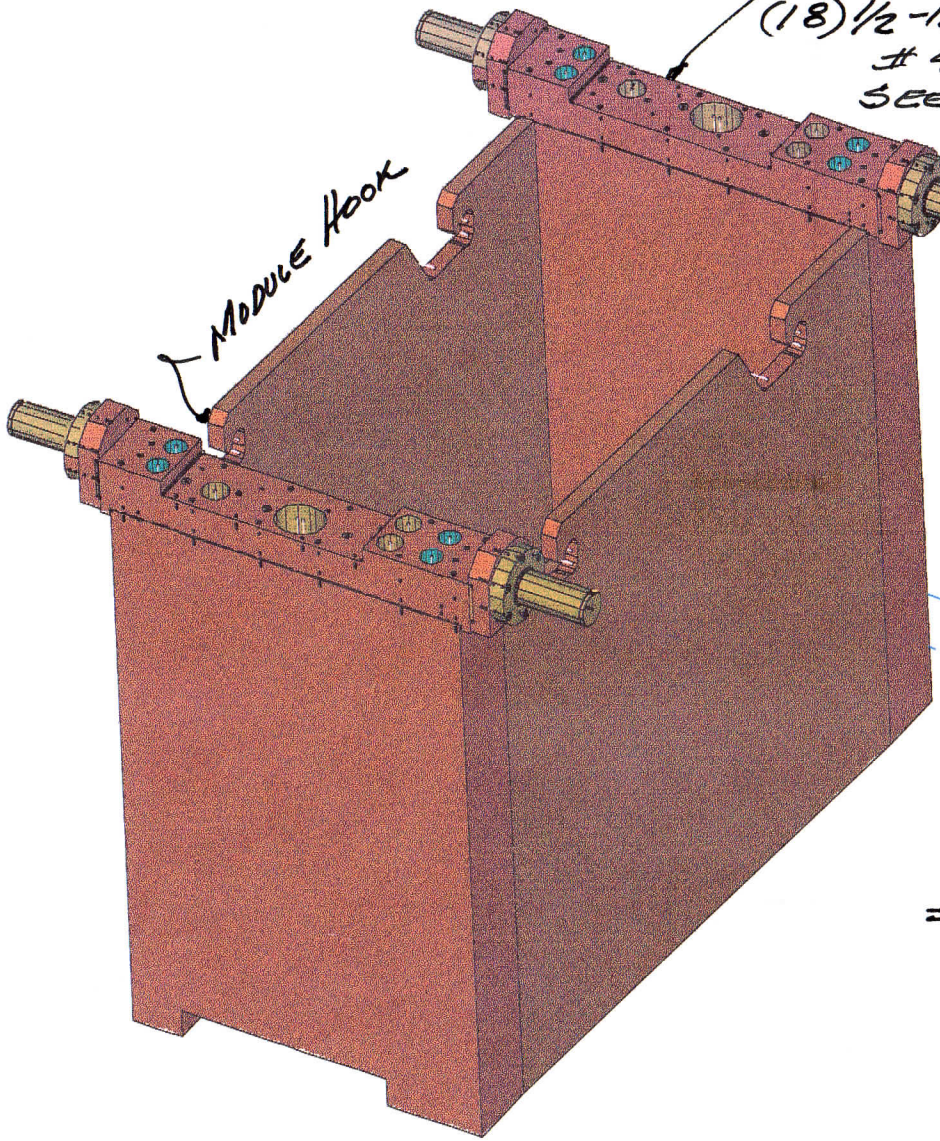

TGT/BAFFLE MODULE

FERMILAB
ENGINEERING NOTE

SECTION	PROJECT	SERIAL-CATEGORY	PAGE
			6

SUBJECT: DETERMINE SCREW SIZE FOR FASTENING TGT. MODULE TOP TO TGT. MODULE BLOCK

NAME: E.M. Allgyer

DATE: 3/10/03 REVISION DATE:

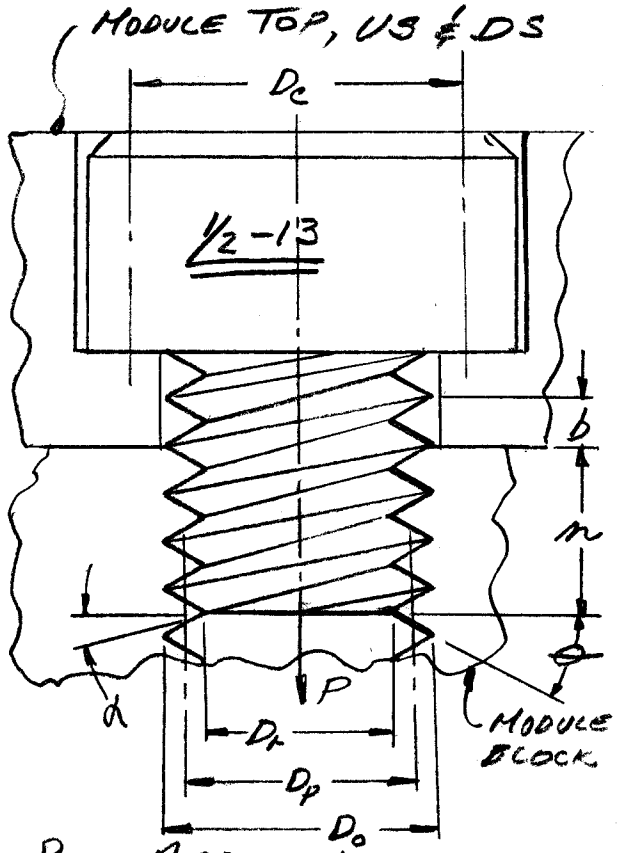

P_a = APPLIED LOAD
P = MAX LOAD ON SCREW
① P_t = LOAD DUE TO TIGHTENING
② D_c = .625
D_o = .500
③ D_p = .4500
D_r = .4056 EXT, .500 INT.
p = .0769
l = .04719 EXT, .04164 INT
⑨ α = 3.1136° ($\tan^{-1}\alpha = \frac{l}{D_p \pi}$)
⑤ θ = 30°
b = .0673 ($p - \frac{p}{8}$)
n = 6 MIN TH'D. ENGAGEMENT
⑥ f = .15 (SCREW & TAPPED HOLES)
⑦ f_c = .15 (COLLAR)

18, TYPE 304 S.S SCREWS SUPT 5 TON.
ASSUME ONLY 9 SUPT. LOAD, THEN EACH SCREW SUPTS $\frac{20{,}000}{9} = P_a \approx 2{,}200^{\#}$ (APPLIED LOAD)
SEE Pg #7

SINCE THE THREADED HOLES ARE BEING TAPPED INTO A36 STEEL WITH A YIELD STRENGTH OF 36 KSI & THE SCREWS ARE MADE FROM TYPE 304 S.S WITH A YIELD STRENGTH OF 35 KSI, THEN FOR ANALYSIS PURPOSES THE LOWER VALUE OF F_y=35KSI WILL BE USE.

$F_T = F_V = F_b = .75 \times 35 \times 10^3 \approx 26 \times 10^3$ psi ALLOWED

THE SUM (P) OF THE TORQUE LOAD (P_t) & APPLIED LOAD (P_a) CANNOT EXCEED

$P = \frac{F_t \pi D_r^2}{4} = \frac{26 \times 10^3 \pi .4056^2}{4} = 3{,}359^{\#}$

$\therefore P_t = P - P_a = 1{,}137^{\#}$

SOLVING FOR REQ'D (T) BY USING P_t

$$T = P_t \left[\frac{D_p}{2} \left(\frac{(\tan\alpha + f/\cos\theta)}{(1 - f\tan\alpha/\cos\theta)} \right) + \frac{f_c D_c}{2} \right]$$

$= 112$ IN-LB MAX

SOLVING FOR SCREW TH'D BENDING STRESS

$f_b = \frac{3 P l}{\pi n D_p b^2} = 12.38 \times 10^3$ psi $< F_b$

SOLVING FOR TAPPED TH'D BENDING STRESS:

$f_b = 10.92 \times 10^3$ psi $< F_b$

SOLVING FOR SCREW TH'D SHEAR STRESS:

$f_v = \frac{P}{\pi n D_r b} = 6.53 \times 10^3$ psi $< F_v$

SOLVING FOR TAPPED TH'D SHEAR STRESS:

$f_v = 5.30 \times 10^3$ psi $< F_v$

SOLVING FOR TORSIONAL STRESS ON ROOT CYLINDER OF SCREW:

$f_{vt} = \frac{16 T}{\pi D_r^3} = 8.55 \times 10^3$ psi $< F_v$

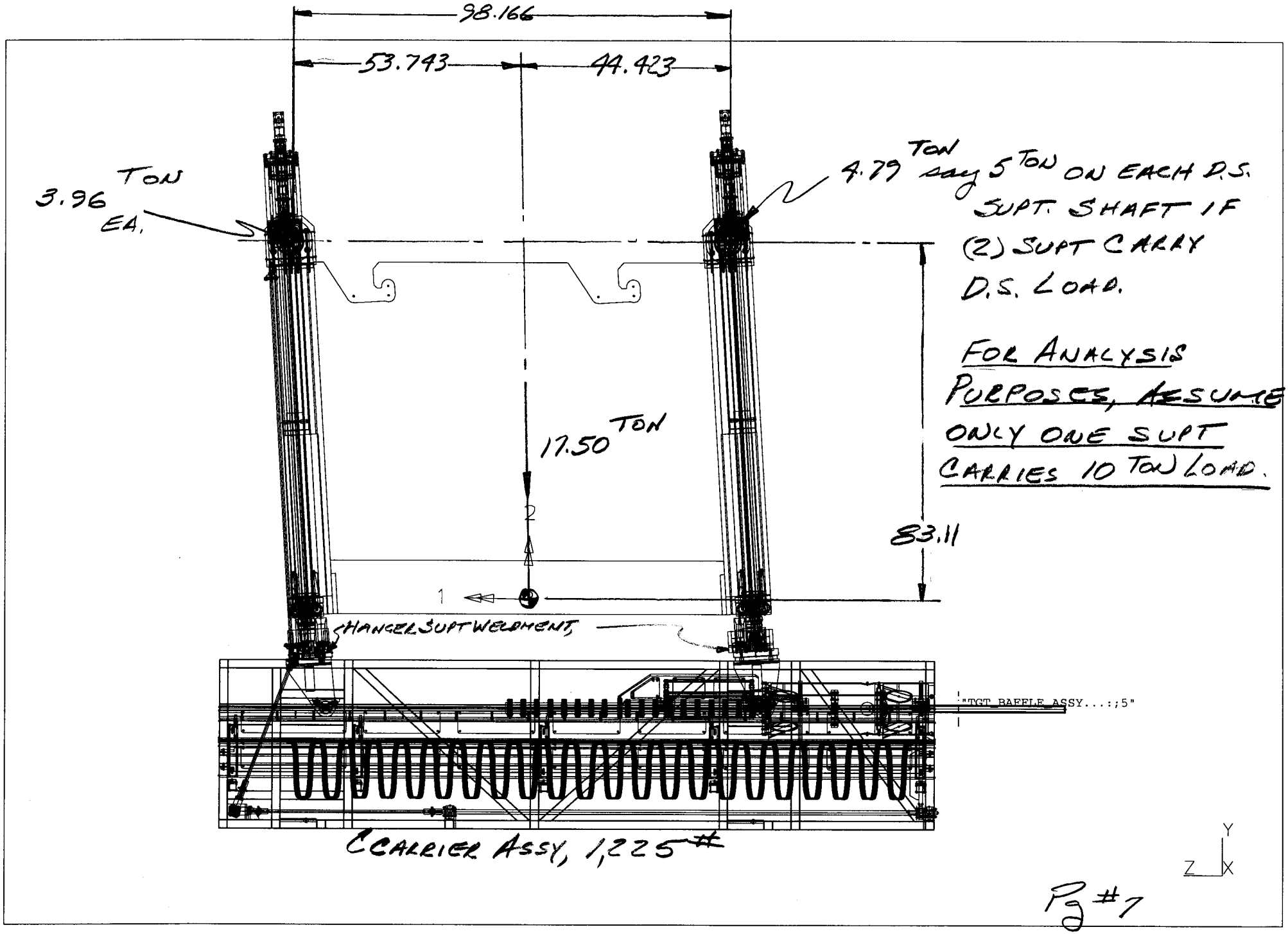

Plotted by villegas on 03-Jan-03 , File: generic.pff

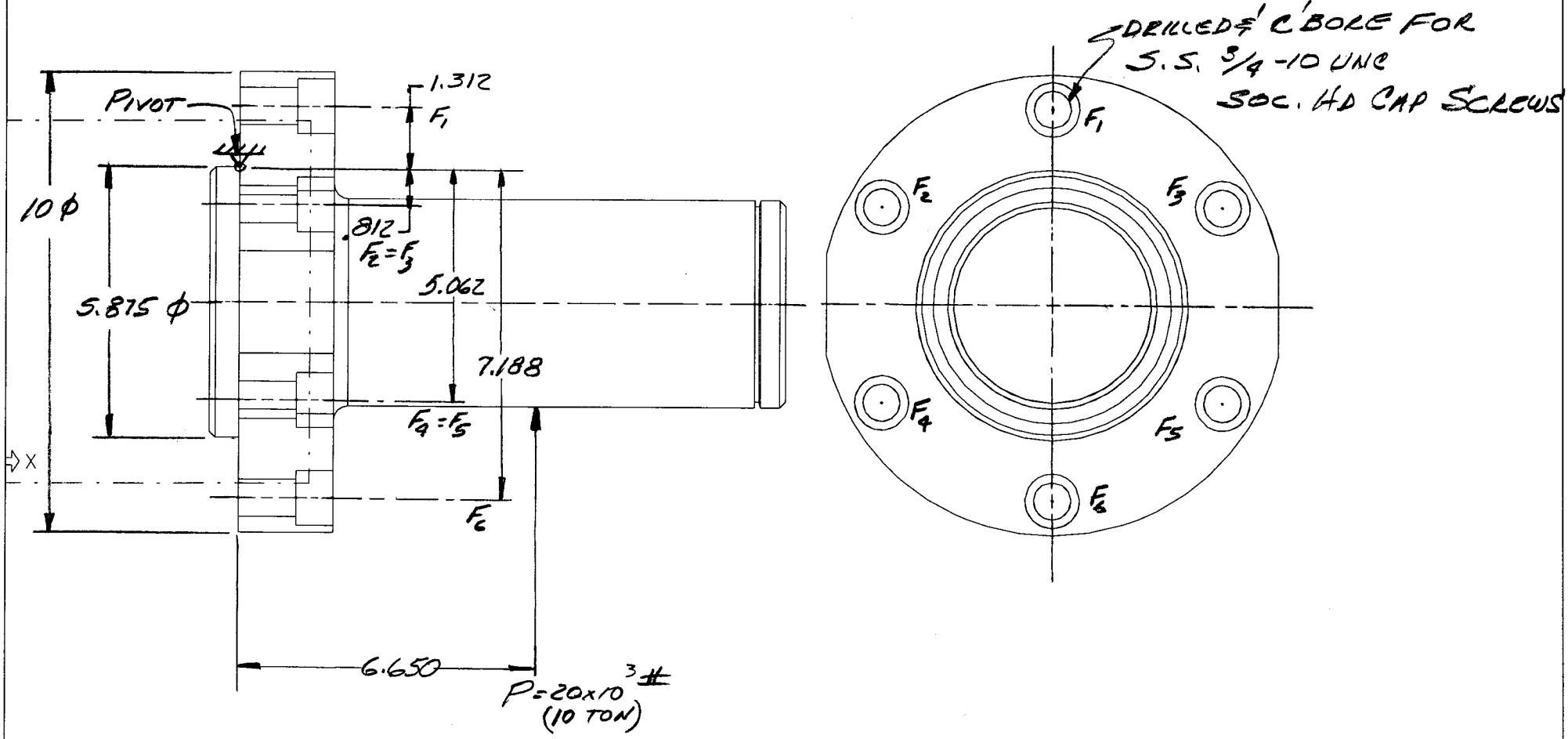

MODULE SUPT. SHAFT
DRWG # MC-406019

Plotted by villegas on 06-Mar-03 , File: generic.pff

FERMILAB
ENGINEERING NOTE

SECTION	PROJECT	SERIAL-CATEGORY	PAGE
			9

SUBJECT: DETERMINE TORQUE & STRESS ON 3/4-10 SCREWS & TAPPED HOLES FASTENING SUPT SHAFT TO MOD. TOPS.

NAME: E.M. Villegas

DATE: 04/17/03 REVISION DATE:

REFERRING TO SKETCH OF MODULE SUPT. SHAFT ON Pg #8

$\frac{F_1}{1.312} = \frac{F_6}{7.188}$ | $\frac{F_2}{.812} = \frac{F_3}{.812} = \frac{F_6}{7.188}$ | $\frac{F_4}{5.062} = \frac{F_5}{5.062} \quad \frac{F_6}{7.188}$

$F_1 = \frac{1.312 F_6}{7.188}$ | $F_2 = F_3 = \frac{812 F_6}{7.188}$ | $F_4 = F_5 = \frac{5.062 F_6}{7.188}$

$$\Sigma M = 1.312F_1 + .812(F_2+F_3) + 5.062(F_4+F_5) + 7.188F_6 - 6.650\mathcal{L} = 0$$

$$= 1.312\left(\frac{1.312F_6}{7.188}\right) + .812\left(\frac{812F_6}{7.188} + \frac{812F_6}{7.188}\right) + 5.062\left(\frac{5.062F_6}{7.188} + \frac{5.062F_6}{7.188}\right) + 7.188F_6 = 6.650\mathcal{L}$$

$$= \frac{1.721F_6}{7.188} + \frac{1.319F_6}{7.188} + \frac{51.248F_6}{7.188} + 7.188F_6 = 6.650\mathcal{L}$$

$$= 1.721F_6 + 1.319F_6 + 51.248F_6 + 51.667F_6 = 47.80\mathcal{L}$$ see Pg #7

$$= 105.955 = 47.80\mathcal{L} \text{ where } \mathcal{L} = 20\times10^3\# \text{ (10 TON)}$$

$F_6 = 9{,}022\# \Rightarrow$ APPLIED LOAD (P_a) REQ'D TO SUPT. $20\times10^3\#$ (10 TON)

$F_5 = F_4 = 6{,}355$

$F_3 = F_2 = 1{,}020$

$F_1 = 1{,}648$

ASSUME A 316 SST SOC HD CAP SCREWS WITH A RECOMMENDED MAX. TIGHTENING TORQUE OF 1375 IN-LB, THEN BY SOLVING FOR A LOAD DUE TO TORQUE (P_t) BY USING EQUATIONS ON Pg 6

$P_t = 9405\#$ & $P \le P_t + P_a = 9405 + 9022 = 18{,}427\#$

USING THE SKETCH SHOWN ON Pg #6, BUT CHANGING THE VALUES FOR THE SYMBOLS TO REFLECT A 3/4-10 TAPPED HOLE

$P = 18{,}427\#$

$P_a = 9{,}022$

① $P_t = 9{,}405$

② $D_c = .938$

$D_o = .750$

③ $D_p = .6850$

$D_r = \cancel{.6273}$ EXT, .750 INT

$p = .100$

$h = \cancel{.06134}$ EXT, .05413 INT

④ $\alpha = 2.661°$

⑤ $\theta = 30°$

$b = .0875$

$n = 7$ (MIN. THD ENGAG.)

⑥-⑦ $f = f_c = .15$

FOR A36 STL, $F_b = F_v = .75\times36\times10^3 = 27\times10^3$ psi ALLOWED

$$f_b = \frac{3Ph}{\pi n D_p b^2} = \frac{3\times18427\times.05413}{\pi\times7\times6850\times.0875^2}$$

$$= 25.95\times10^3 \text{ psi} < F_b$$

$$f_v = \frac{P}{\pi n D_r b} = \frac{18427}{\pi\times7\times.750\times.0875}$$

$$= 12.77\times10^3 \text{ psi} < F_v$$

ALTHOUGH NOT NECESSARY FOR OUR APPLICATION, THE TORSIONAL SHEAR STRESS ON ROOT CYLINDER OF SCREW IS: $f_{UT} = \frac{16T}{\pi D_r^3} = \frac{16\times1375}{\pi\cdot.6273^3} = 28.37\times10^3$ psi

FERMILAB
ENGINEERING NOTE

SECTION	PROJECT	SERIAL-CATEGORY	PAGE
			10

SUBJECT: DETERMINE TORQUE & STRESSES ON MAIN DRAW BAR & NUT, 1 1/4-7UNC (SEE Pg 11)

NAME: E.M. [illegible]

DATE: 4/18/03 | REVISION DATE: 01/16/04 *

* REVISED BY CHANGING 1 5/16-16UN THREAD TO 1 1/4-7UNC & NUT MATERIAL FROM SST T-304 TO NAVAL BRONZE C464

ALLOWABLES FOR MAIN DRAW BAR, MAT'L AISI 1144 CF

$F_t = F_b = F_v = .75 \times 90 \times 10^3 = \underline{67.5 \times 10^3 \text{ psi}}$ ALLOWED

ALLOWABLES FOR NUT, MAT'L NAVAL BRONZE C464, QTR. HARD MIN.

$F_t = F_b = F_v = .75 \times 48 \times 10^3 = \underline{36 \times 10^3 \text{ psi}}$ ALLOWED

$$P \le P_t + P_a = \frac{F_t \pi D_r^2}{4} = \frac{36 \times 10^3 \pi 1.0959^2}{4} = 33.93 \times 10^3 \text{\#} \text{ MAX.}$$

P_a = APPLIED LOADS = 1225 (CARRIER) + 3120 (BELLEVILLE WASHERS) = 4345 #

P_t = TORQUE LOAD = $P - P_a = 33.93 \times 10^3 - 4345 = 29.59 \times 10^3$ #

$D_c = 2.187$
$D_o = 1.250$
$D_p = 1.1572$
$D_r = 1.0749$ EXT / 1.250 INT.
$p = .1429$
$h = .0876$ EXT / .0773 INT
$\alpha = 2.25$
$\theta = 30°$
$b = .1250$
$n = 7$ (1" ENGAG. MIN)
$f = f_c = .15$

$T = 8.52 \times 10^3$ IN-LB = 710 FT-LB MAX.

SCREW
$f_b = 22.42 \times 10^3 < F_b$ (AISI 1144 CF)

NUT
$f_b = 19.79 \times 10^3 < F_b$ (C464)

SCREW
$f_v = 11.48 \times 10^3 < F_v$ (AISI 1144 CF)

NUT
$f_v = 9.87 \times 10^3 < F_v$ (C464)

SCREW, TORSIONAL SHEAR AT ROOT CYL.
$f_{vT} = 34.96 \times 10^3 < F_v$ (AISI 1144 CF)

DRAW BAR TORSIONAL STRESS AT UNDER CUT

$f_{vT} = \frac{Tc}{J}$ where $c = \frac{1.080}{2} = .54$

$J = \frac{\pi 1.080^4}{32} = .1336$

$= 34.44 \times 10^3 < F_v$ (AISI 1144)

NOTES:
1) SEE Pg #6 FOR FORMULAS
2) SEE THE FOLLOWING Pgs 11, 12 & 13 FOR DRAW BAR & NUT DETAILS

REV	DESCRIPTION	DRAWN	DATE
		APPROVED	DATE
A	ITEM 6 ADDED ; .588 DIM. ADDED 1.689 WAS 2.21 ; ITEM 5 WAS 1 NOW 2 ; (25.800# DBL. SHEAR) ADDED TO NOTE 2.	G SMITH	1/20/04
		E.M.V.	1/20/04

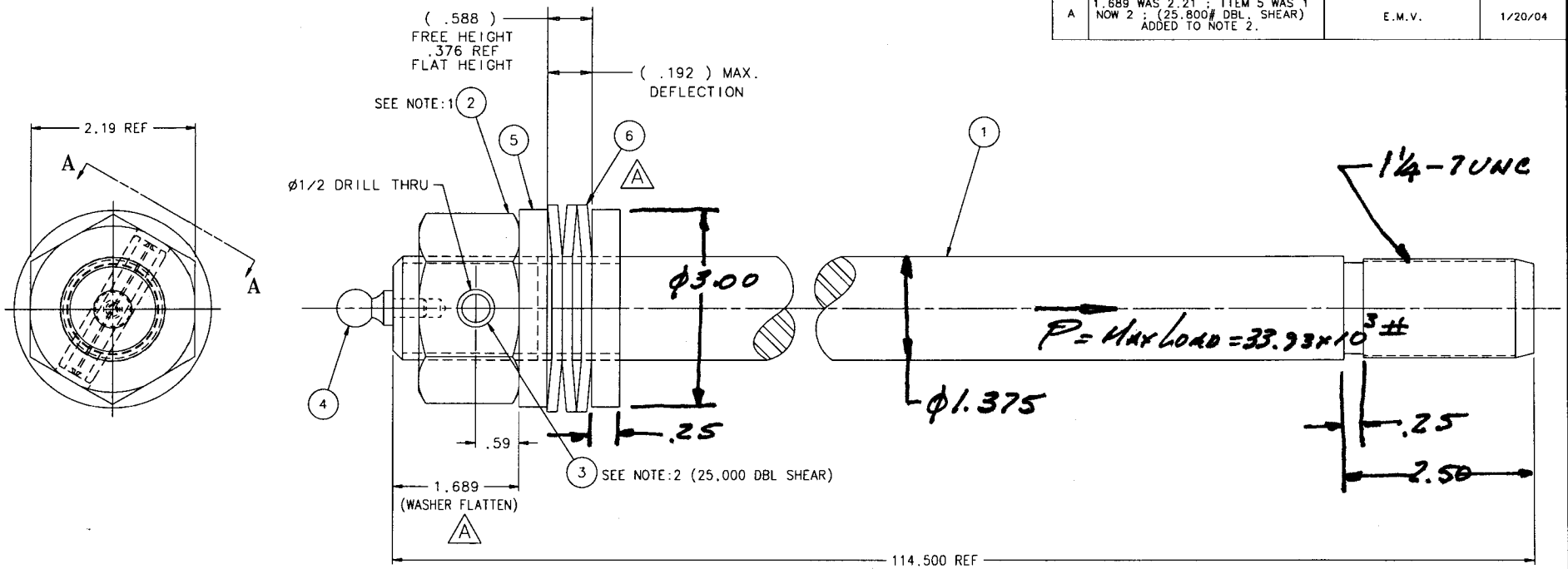

VIEW "A-A"

DETERMINE DESIGNED DOUBLE SHEAR LOAD (P_s) ON ROLLED PIN ITEM 3, FROM TORQUE (T) ON Pg #10

$1.375 P_s = 8.52 \times 10^3$ IN-LB

$P_s = 6.196 \times 10^3 \# < 25{,}000 \#$

Pg #11

ITEM	PART NO.	DESCRIPTION OR SIZE	QTY.
6	COML	BELLEVILLE DISC SPRING McMASTER CARR - #9712k98	3
5	MB-406008	DRAW BAR WASHER	2
4	COML	ø1/2 SHOULDER TYPE TOOLING BALL-CARRLANE #CL-2-SCB	1
3	COML	ø1/2 X 2.00 LG. STN STL COILED ROLL PIN	1
2	COML	1 3/8-6 UNC GRADE 5 ZINC PLATED STEEL HEX NUT	1
1	MC-427468	MAIN DRAW BAR	1

PARTS LIST

UNLESS OTHERWISE SPECIFIED			ORIGINATOR	E.VILLEGAS	01-DEC-2002
.XX	.XXX	ANGLES	DRAWN	N.GRINNELL	24-DEC-2002
± .03	± .005	± - -	CHECKED	W.CYKO	29-MAY-2003
			APPROVED	E.VILLEGAS	29-MAY-2003

1. BREAK ALL SHARP EDGES .015 MAX.
2. DO NOT SCALE DRAWING.
3. DIMENSIONS BASED UPON ANSI Y14.5M-1982
4. ALL DIMENSIONS ARE INCHES
5. MAX. ALL MACH. SURFACES ✓

USED ON: MD-431011

MATERIAL: SEE PARTS LIST ABOVE

FERMI NATIONAL ACCELERATOR LABORATORY
UNITED STATES DEPARTMENT OF ENERGY

PPD/MECHANICAL DEPARTMENT
NUMI, TARGET HALL, TARGET BAFFLE
MAIN DRAW BAR ASSY

SCALE	DRAWING NUMBER	SHEET	REV
1:1	8875.112-MC-427471	1 OF 1	A

CREATED WITH : Ideas9m3 GROUP: PPD/MECHANICAL DEPARTMENT

NOTES:
1. ITEM 2 REQUIRES DRILLING PRIOR TO ASSEMBLY FOR MAXIMUM ADJUSTMENT
2. DRILL FOR ITEM 3 ONCE ITEM 2 IS PROPERLY LOCATED AND ADJUSTED
3. APPROXIMATE ASSY WEIGHT - 50 LBS.

REV	DESCRIPTION	DRAWN	DATE
		APPROVED	DATE
A	ø1.090/ø1.1230 WAS ø1.290/ø1.2450 1 1/4-7 UNC WAS 1 5/16 UN MATL. WAS ø3 1/2 TYPE 304 STAINLESS STEEL	G SMITH	1/21/04
		E.M.V.	1/21/04

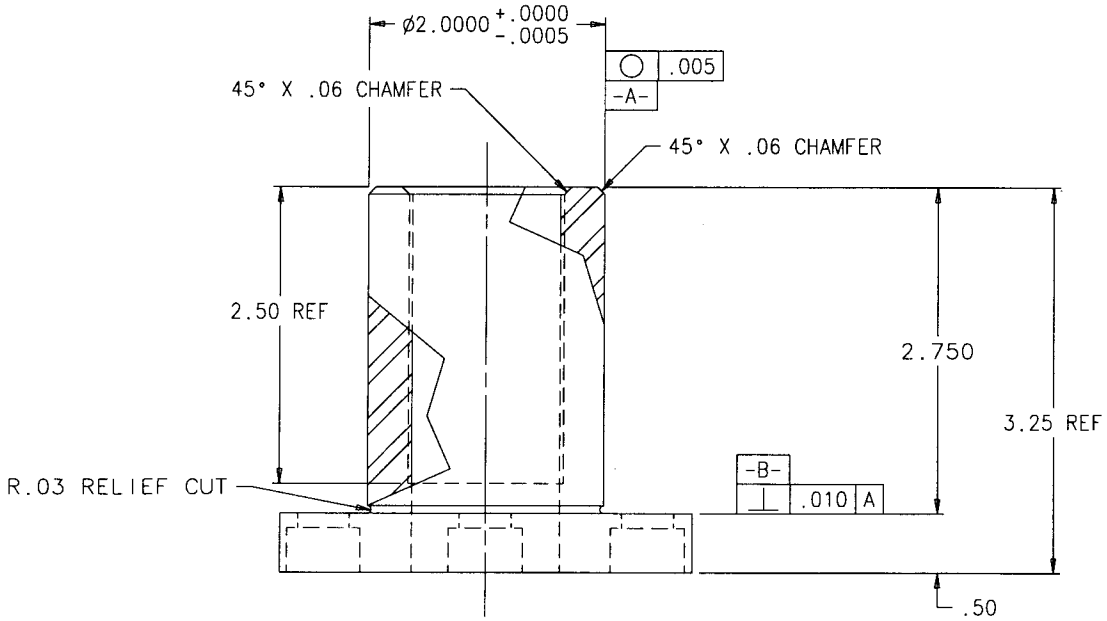

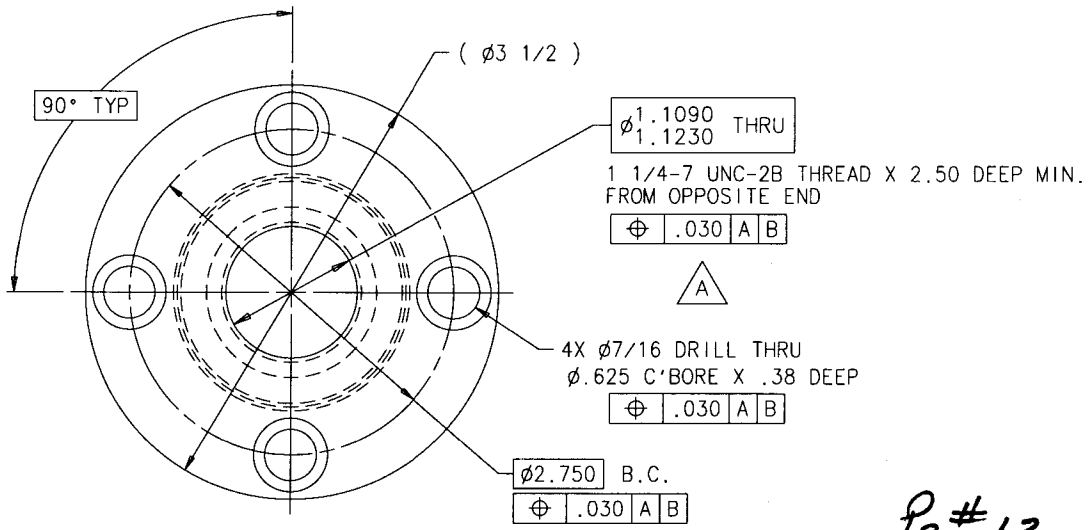

Pg #12

UNLESS OTHERWISE SPECIFIED			ORIGINATOR	E.VILLEGAS	03-FEB-2003
.XX	.XXX	ANGLES	DRAWN	N.GRINNELL	19-MAR-2003
± .03	± .005	± 1°	CHECKED	W.CYKO	11-JUN-2003
1. BREAK ALL SHARP EDGES .015 MAX. 2. DO NOT SCALE DRAWING. 3. DIMENSIONS BASED UPON ANSI Y14.5M-1982 4. ALL DIMENSIONS ARE INCHES 5. MAX. ALL MACH. SURFACES 125 √			APPROVED	E.VILLEGAS	11-JUN-2003
			USED ON	MD-427799	
			MATERIAL	NAVAL BRONZE C464 QUARTER HARD MIN. (A)	

FERMI NATIONAL ACCELERATOR LABORATORY
UNITED STATES DEPARTMENT OF ENERGY

PPD/MECHANICAL DEPARTMENT
NUMI TARGET HALL TARGET BAFFLE
DRAW BAR NUT - UPSTREAM

SCALE	DRAWING NUMBER	SHEET	REV
1:1	8875.112-MB-427798	1 OF 1	A

CREATED WITH : Ideas9m3 | GROUP: PPD/MECHANICAL DEPARTMENT

REV	DESCRIPTION	DRAWN	DATE
		APPROVED	DATE
A	ø1.1090/ø1.1230 WAS ø1.2590/ø1.2450 1 1/4 7 UNC WAS 1 5/16 UN MATL. WAS ø3 1/2 TYPE 304 STAINLESS STEEL	G SMITH	1/20/04
		E.M.V.	1/20/04

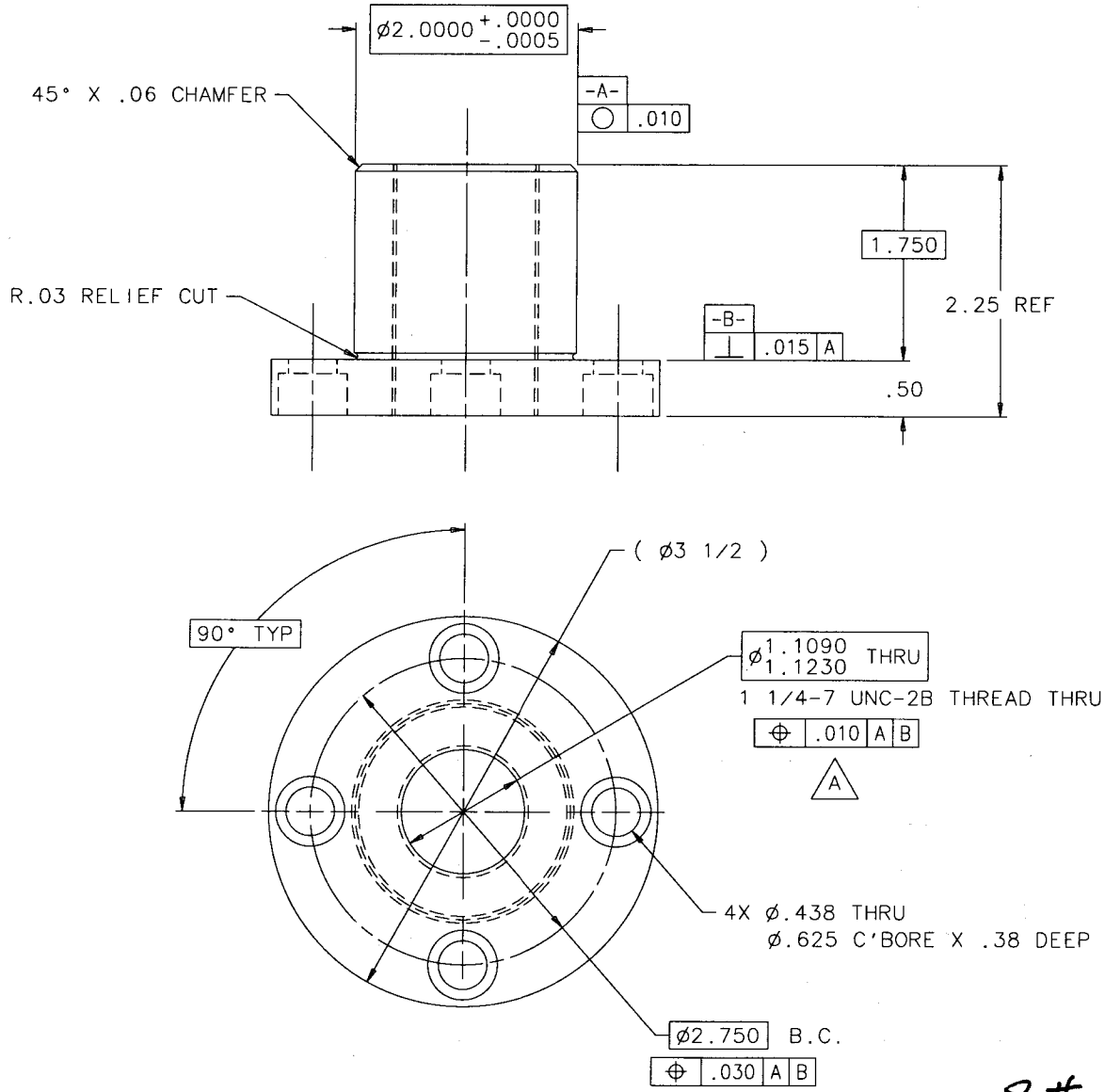

Pg #13

UNLESS OTHERWISE SPECIFIED			ORIGINATOR	E.VILLEGAS	03-FEB-2003
.XX	.XXX	ANGLES	DRAWN	N.GRINNELL	12-FEB-2003
± .03	± .005	± 1/2°	CHECKED	W.CYKO	11-JUN-2003
			APPROVED	E.VILLEGAS	11-JUN-2003

1. BREAK ALL SHARP EDGES .015 MAX.
2. DO NOT SCALE DRAWING.
3. DIMENSIONS BASED UPON ANSI Y14.5M-1982
4. ALL DIMENSIONS ARE INCHES
5. MAX. ALL MACH. SURFACES 125

USED ON: MD-427772

MATERIAL: NAVAL BRONZE C464 QUARTER HARD MIN. (A)

FERMI NATIONAL ACCELERATOR LABORATORY
UNITED STATES DEPARTMENT OF ENERGY

PPD/MECHANICAL DEPARTMENT
NUMI TARGET HALL TARGET BAFFLE
DRAW BAR NUT - DOWNSTREAM

SCALE	DRAWING NUMBER	SHEET	REV
1:1	8875.112-MB-427774	1 OF 1	A

CREATED WITH : ideas9m3 | GROUP: PPD/MECHANICAL DEPARTMENT

FERMILAB
ENGINEERING NOTE

SECTION	PROJECT	SERIAL-CATEGORY	PAGE
			14

SUBJECT: DETERMINE TORQUE & STRESSES ON LOWER DRIVE DRAW BAR & PLATE, 1-8 UNC

NAME: E.M. Villegas

DATE: 04/21/03

REVISION DATE:

ALLOWABLES FOR DRAW BAR & TAPPED PLATE
MAT'L. STN STL TYPE 304

$F_t = F_b = F_v = .75 \times 35 \times 10^3 = \underline{26 \times 10^3 \text{ psi}}$

USING FORMULAS FROM Pg #6, BUT CHANGING SYMBOL VALUES FOR 1-8 UN THREAD GIVES RESULTS AS FOLLOWS:

$$P = \frac{F_t \pi D_r^2}{4} = \frac{26 \times 10^3 \pi \cdot .8466^2}{4} = \underline{14.64 \times 10^3 \#}$$

ALLOWED

$P_a = 193\#$ (ASSUME SINGLE BAR CARRIES FULL LOAD OF LOWER DRIVE ASSY)

$$P = P_t + P_a \Rightarrow P_t = P - P_a = \underline{14.45 \times 10^3 \#}$$

(3) $D_c = 1.250$
$D_o = 1.0000$
(3) $D_p = .9188$
$D_r = .8466$ EXT / 1.000 INT
$p = .125$
$h = .06766$ EXT / .07668 INT
(1) $\alpha = 2.4797°$
(3) $\theta = 30°$
$b = .1094$
$n = 8$ (1" ENG'G.)
(3) $f = f_c = .15$

SEE Pg #15

$T = 2{,}803$ IN-LB
$= 234$ FT-LB

BAR
$f_b = 10.75 \times 10^3$ psi $< F_b$

PLATE
$f_b = 12.19 \times 10^3$ psi $< F_b$

BAR
$f_v = 6.29 \times 10^3$ psi $< F_v$

PLATE
$f_v = 5.32 \times 10^3$ psi $< F_v$

TORSIONAL SHEAR AT ROOT CYL OF BAR.
$f_{vT} = 23.53 \times 10^3$ psi $< F_v$

TORSIONAL SHEAR STRESS FOR BAR SHAFT
$f_{vT} = 10.04 \times 10^3$ psi $< F_v$

NOTE: SEE FOLLOWING Pgs 15 & 16 FOR LOWER DRIVE PLATE DRAW BAR & PLATE

REV	DESCRIPTION	DRAWN	DATE
		APPROVED	DATE

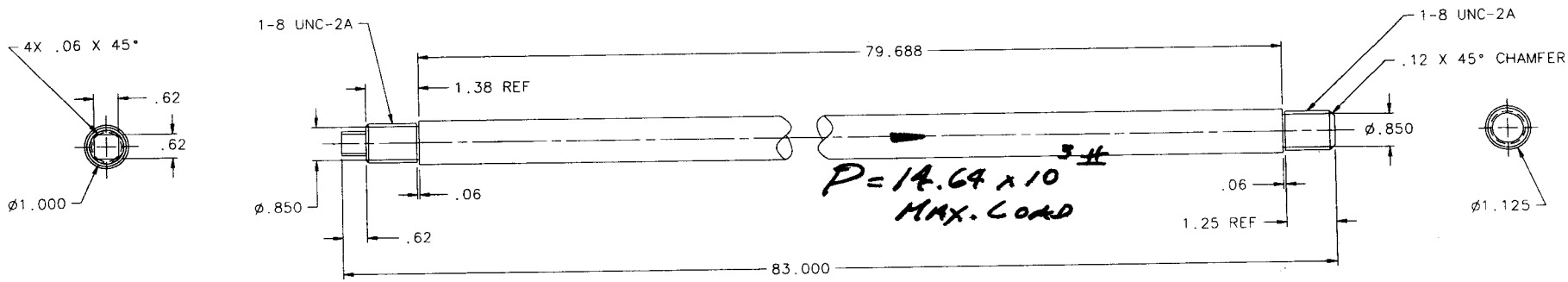

TORSIONAL SHEAR STRESS (f_{vT}) AT BASE OF .62" SQUARE WRENCH FLATS:

$f_{vT} = \frac{T}{Z_p}$ where $T = 2803$ IN-LB FROM Pg #14

$= 56.5 \times 10^3$ psi $\qquad Z_p = .208 \times .62^3 = .0496$

$> F_v = 26 \times 10^3$ psi

NOT GOOD!

SINCE THE HIGHEST TORSIONAL SHEAR IS AT THE BASE OF .62 WRENCH FLATS, THEN THE MAXIMUM TIGHTENING TORQUE (T) WILL BE:

$T = F_v Z_p \qquad F_v = 26 \times 10^3$ psi FROM Pg #14

$= 1290$ IN-LB

$= 108$ FT-LB

Pg #15

UNLESS OTHERWISE SPECIFIED			ORIGINATOR	E. VILLEGAS	03-FEB-2003
.XX	.XXX	ANGLES	DRAWN	N. GRINNELL	21-APR-2003
± .03	± .005	± - -	CHECKED		
			APPROVED		

1. BREAK ALL SHARP EDGES .015 MAX.
2. DO NOT SCALE DRAWING.
3. DIMENSIONS BASED UPON ANSI Y14.5M-1982
4. ALL DIMENSIONS ARE INCHES
5. MAX. ALL MACH. SURFACES 125

USED ON: ME-427XXX

MATERIAL: TYPE 304 STAINLESS STEEL ROUND ø1 1/8

FERMI NATIONAL ACCELERATOR LABORATORY
UNITED STATES DEPARTMENT OF ENERGY

PPD/MECHANICAL DEPARTMENT
NUMI TARGET HALL TARGET BAFFLE
LOWER DRIVE PLATE DRAW BAR

SCALE	DRAWING NUMBER	SHEET	REV
1:2	8875.112-MC-427918	1 OF 1	

CREATED WITH: Ideas9m3 | GROUP: PPD/MECHANICAL DEPARTMENT

Plotted by grinnell on 21-Apr-03 , File: LOWER_DRIVE_PLATE_DRAW_BAR.pff

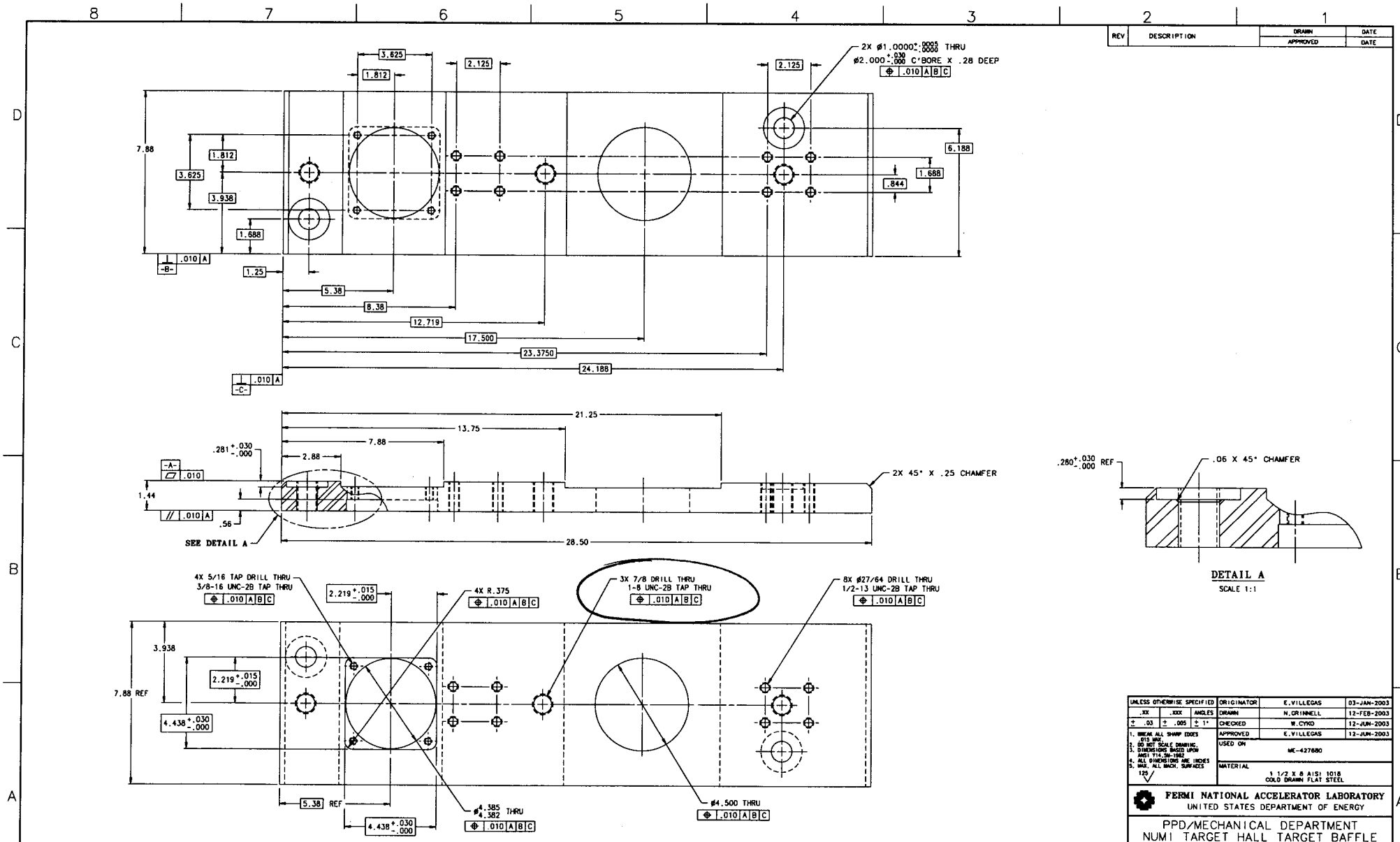

REV	DESCRIPTION	DRAWN	DATE
		APPROVED	DATE

NOTES:

2. FINISH PART WITH ELECTROLESS NICKEL COATING AT .0005" THICK
1. APPROXIMATE PART WEIGHT - 71 LBS.

Pg #16

UNLESS OTHERWISE SPECIFIED			ORIGINATOR	E.VILLEGAS	03-JAN-2003
.XX	.XXX	ANGLES	DRAWN	N.GRINNELL	12-FEB-2003
± .03	± .005	± 1°	CHECKED	W.CYKO	12-JUN-2003
1. BREAK ALL SHARP EDGES .015 MAX. 2. DO NOT SCALE DRAWING. 3. DIMENSIONS BASED UPON ANSI Y14.5M-1982 4. ALL DIMENSIONS ARE INCHES 5. MAX. ALL MACH. SURFACES 125			APPROVED	E.VILLEGAS	12-JUN-2003
			USED ON	ME-427680	
			MATERIAL	1 1/2 X 8 AISI 1018 COLD DRAWN FLAT STEEL	

FERMI NATIONAL ACCELERATOR LABORATORY
UNITED STATES DEPARTMENT OF ENERGY

PPD/MECHANICAL DEPARTMENT
NUMI TARGET HALL TARGET BAFFLE
LOWER DRIVE PLATE, LOW TRANS DR

SCALE	DRAWING NUMBER	SHEET	REV
1:2	8875.112-MD-427679	1 OF 1	

CREATED WITH : Ideas9m3 GROUP: PPD/MECHANICAL DEPARTMENT

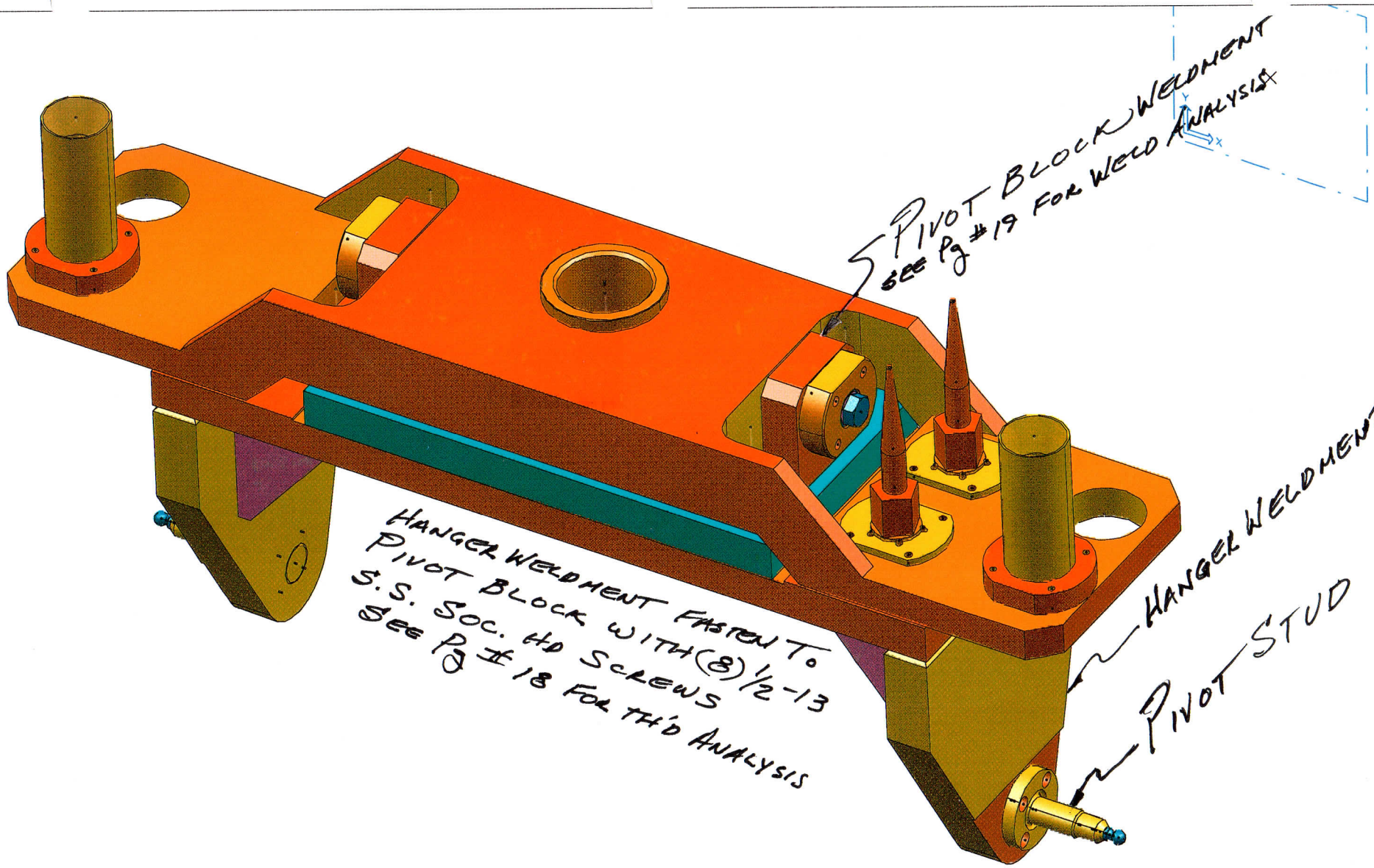

FRAME HANGER ASSY-D.S.

SUBJECT: DETERMINE TORQUE & STRESS ON 1/2-13 SCREWS & TAPPED HOLES FASTENING HANGER SUPT & FRAME HANGER

NAME: E.M. Villegas

DATE: 9/03/03 | REVISION DATE:

SEE Pg #7 & 17

ALLOWABLES:

S.S TYPE 304 SCREWS

$F_t = F_b = F_v = .75 \times 35 \times 10^3 = \underline{26 \times 10^3 \text{ psi}}$

ALUM 6061-T6, TAPPED HOLES

$F_t = F_b = F_v = .75 \times 15 \times 10^3 = \underline{11.25 \times 10^3 \text{ psi}}$

≈ @ 400°F, 204°C

USING FORMULAS FROM Pg #6, BUT CHANGING SYMBOL VALUES FOR 1/2-13 THREADS GIVES RESULTS AS FOLLOWS:

$$P = \frac{F_t \pi D_t^2}{4} = \frac{26 \times 10^3 \pi \cdot .4056^2}{4} = 3.36 \times 10^3 \#$$

$$P_a = \frac{1225}{4} = 306^{\#} \text{ (ASSUME 4 SCREWS SUPT FULL CARRIER LOAD)}$$

$$P = P_t + P_a \Rightarrow P_t = P - P_a = 3.05 \times 10^3 \#$$

$D_c = .625$
$D_o = .5000$
$D_p = .4500$
$D_t = .4056$ EXT / .5000 INT
$p = .0769$
$h = .04719$ EXT / .04169 INT
$\alpha = 3.1136°$
$\theta = 30°$
$b = .0673$
$n = 13$
$f = f_c = .15$

$T = 301$ IN-LB
25 FT-LB

S.S. SCREW

$f_b = 5.71 \times 10^3$
$f_v = 3.01 \times 10^3$
$f_{vT} = 22.97 \times 10^3$
$\} < 26 \times 10^3$ psi

ALUM PLATE

$f_b = 5.09 \times 10^3$
$f_v = 2.44 \times 10^3$
$\} < 11.25 \times 10^3$ psi

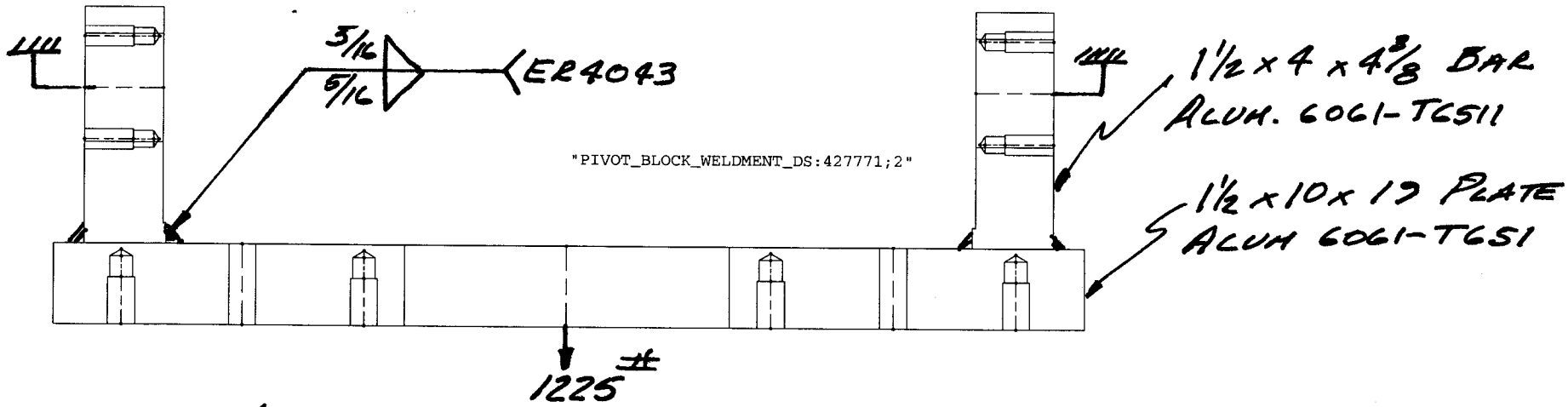

ALLOWABLE STRESS FOR
ER4043 WELD ROD, $F_v = 5 \times 10^3$ psi

APPLIED SHEAR STRESS $f_v = \dfrac{1225^{\#}}{A}$ where $A = 2(2 * 4)\sin 45^\circ (3/2)$
$= 3.53 \text{ in}^2$

$= 347 \text{ psi} < F_v$

PIVOT BLOCK

/cadwhs/server04/ms_villegas/ENGG_NOTE.mf1

RESULTS: 2- B.C. 1,STRESS_2,LOAD SET 1
STRESS - MAX SHEAR MIN: 1.59E+00 MAX: 7.70E+03
DEFORMATION: 1- B.C. 1,DISPLACEMENT_1,LOAD SET 1
DISPLACEMENT - MAG MIN: 0.00E+00 MAX: 8.08E-03
FRAME OF REF: PART

VALUE OPTION:ACTUAL

τ_v = 7.70D+03
6.93D+03
6.16D+03
5.39D+03
4.62D+03
3.85D+03
3.08D+03
2.31D+03
1.54D+03
7.72D+02
1.59D+00

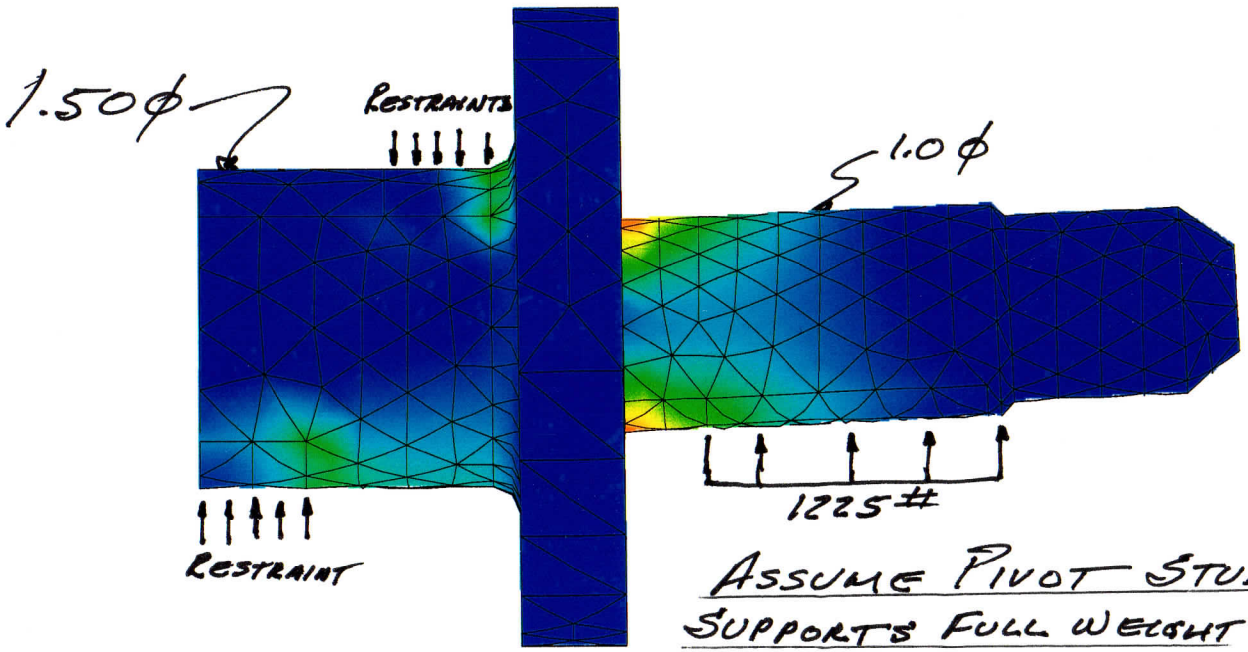

ASSUME PIVOT STUD SUPPORTS FULL WEIGHT OF CARRIER

MAT'L: ALUM. 6061-T6
ASSUME OPERATING TEMP. 400°F (204°C)
$F_y \cong 15 \times 10^3$ psi @ 400°F

BY THE DISTORTATION-ENERGY THEORY, THE ALLOWABLE SHEAR STRESS IS $F_v = .577 \times 15 \times 10^3 = 8.7 \times 10^3 > \tau_v$

REF PART #427754

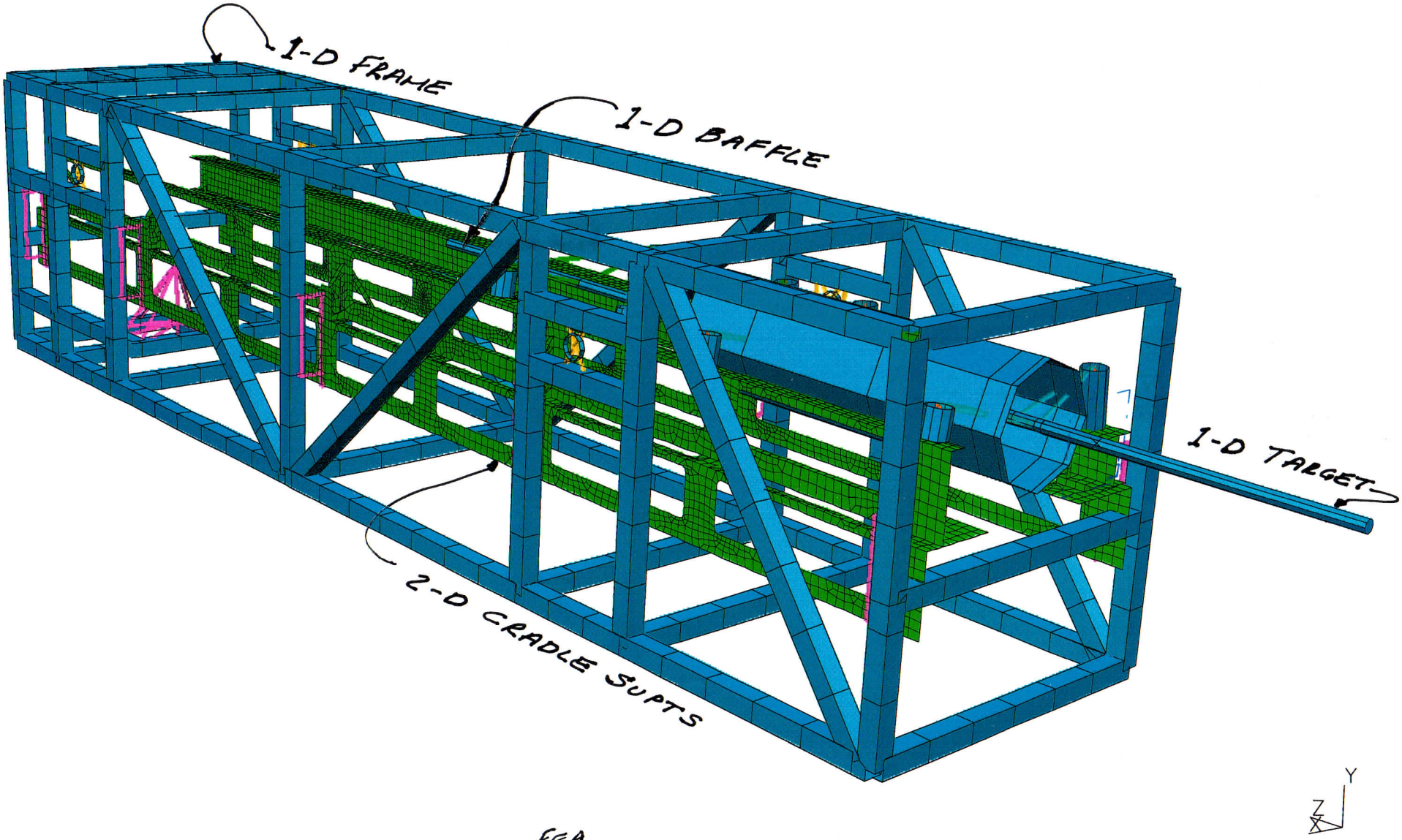

FEA
CARRIER ASSY MODEL

SUBJECT: SYNOPSIS OF FEA RESULTS FOR TGT/BAFFLE FRAME & CRADLE SUPPORTS

NAME | DATE | REVISION DATE

MAT'L: ALUM 6061-T6
YIELD STRESS (F_y) WHEN SUBJECTED TO AN ELEVATED TEMPERATURE OF 212°F (100°C) FOR A PERIOD OF 100×10^3 HOURS IS 39×10^3 psi.

USING A SAFETY FACTOR OF 1.5, YIELDS AN ALLOWED VALUE FOR ALL STRESSES OF $F = \frac{39 \times 10^3}{1.5} = 26 \times 10^3$ psi

REF: KAUFMAN, PROPERTIES OF ALUM. ALLOYS

2-D TGT/BAFFLE CRADLE SUPPORTS, SEE Pg #23

LOW ENERGY POSITION	MID-POSITION	HIGH ENERGY POSITION
$f_{VM} = 1.41 \times 10^3$ psi	$f_{VM} = 2.09 \times 10^3$	$f_{VM} = 4.14 \times 10^3$
$f_v = 722$	$f_v = 1.12 \times 10^3$	$f_v = 2.23 \times 10^3$
$y_{MAX} = .012''$	$y_{MAX} = .011$	$y_{MAX} = .011$

1-D TGT/BAFFLE FRAME WELDMENT SEE Pg #24

$f_{VM} = 826$	$f_{VM} = 1.05 \times 10^3$	$f_{VM} = 1.79 \times 10^3$
$f_v = 407$	$f_v = 266$	$f_v = 304$
$y_{MAX} = .019''$ .00501 .0172 .018	$y_{MAX} = .011''$	$y_{MAX} = .011''$

NOTE: IN ALL CASES, VON MISES STRESS (f_{VM}) & MAX. SHEAR (f_v) STRESS IS CONSIDERABLY LESS THAN THE ALLOWED STRESS (F) OF 26×10^3 psi.

ALSO, THE ROOT-MEAN-SQUARE AVERAGE OF THE TARGETED DEFLECTIONS IS $\sqrt{.010^2 + .010^2 + .020^2} = .024''$ WHICH IS GREATER THAN y_{MAX} AT TGT END.

/cadwhs/server04/ms_villegas/ENGG_NOTE.mf1

RESULTS: 3- B.C. 1,STRESS_3,LOAD SET 1
STRESS - VON MISES MIN: 3.01E-01 MAX: 4.14E+03
DEFORMATION: 1- B.C. 1,DISPLACEMENT_1,LOAD SET 1
DISPLACEMENT - MAG MIN: 1.16E-04 MAX: 1.07E-02
FRAME OF REF: PART

VALUE OPTION:ACTUAL
SHELL SURFACE: TOP

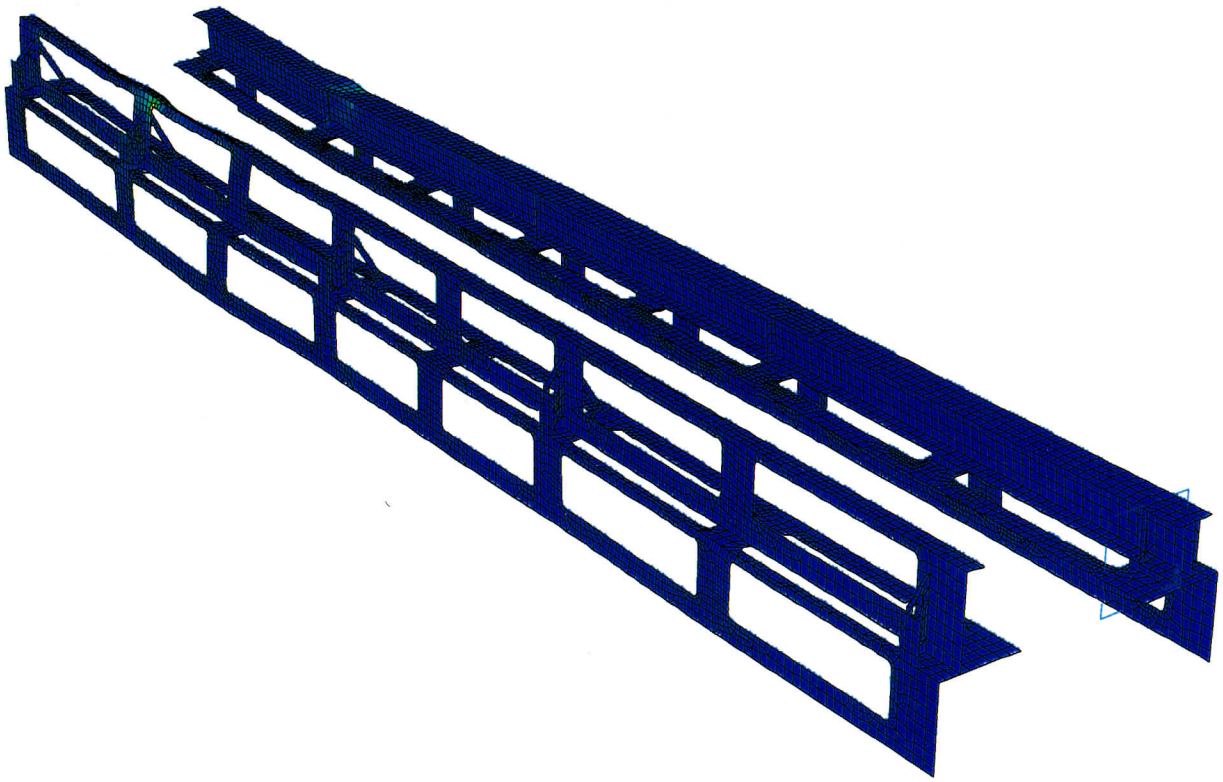

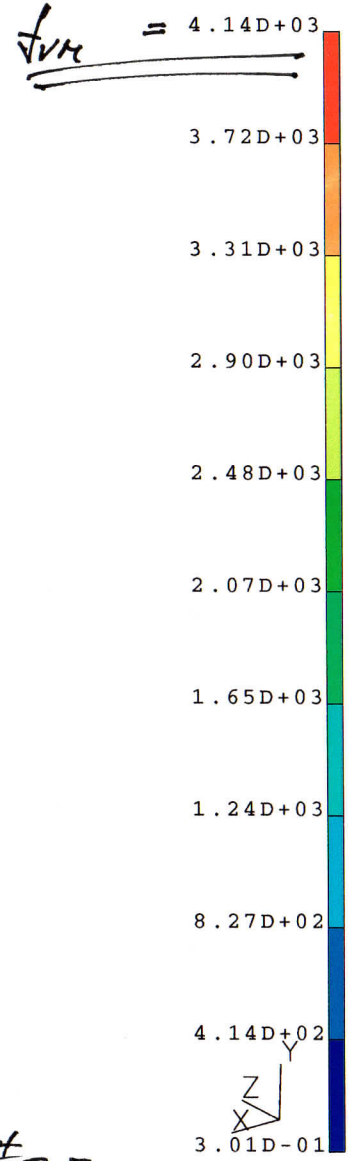

Pg #23

/cadwhs/server04/ms_villegas/ENGG_NOTE.mf1

RESULTS: 1- B.C. 1,DISPLACEMENT_1,LOAD SET 1

DISPLACEMENT - MAG MIN: 0.00E+00 MAX: 1.94E-02

DEFORMATION: 1- B.C. 1,DISPLACEMENT_1,LOAD SET 1

DISPLACEMENT - MAG MIN: 0.00E+00 MAX: 1.94E-02

FRAME OF REF: PART

VALUE OPTION:ACTUAL

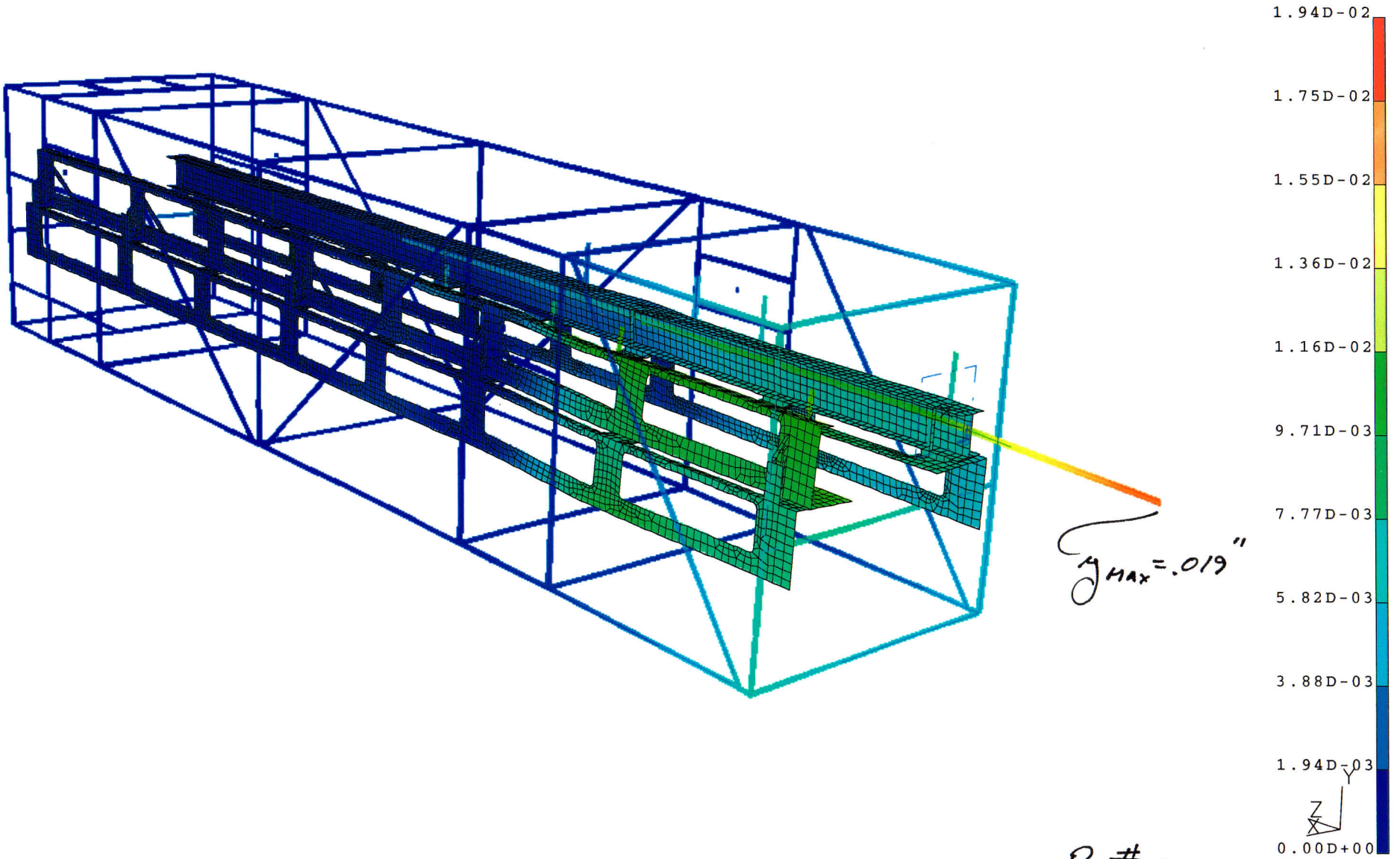

$y_{MAX} = .019''$

Pg # 24

/cadwhs/server04/ms_villegas/ENGG_NOTE.mf1

RESULTS: 4- B.C. 1,ELEMENT FORCE_4,LOAD SET 1

MAGNITUDE - MIN: 4.48E-14 MAX: 1.79E+03

Data component: VON MISES STRESS at maximum point

VALUE OPTION:ACTUAL

f_{vm} = 1.79D+03

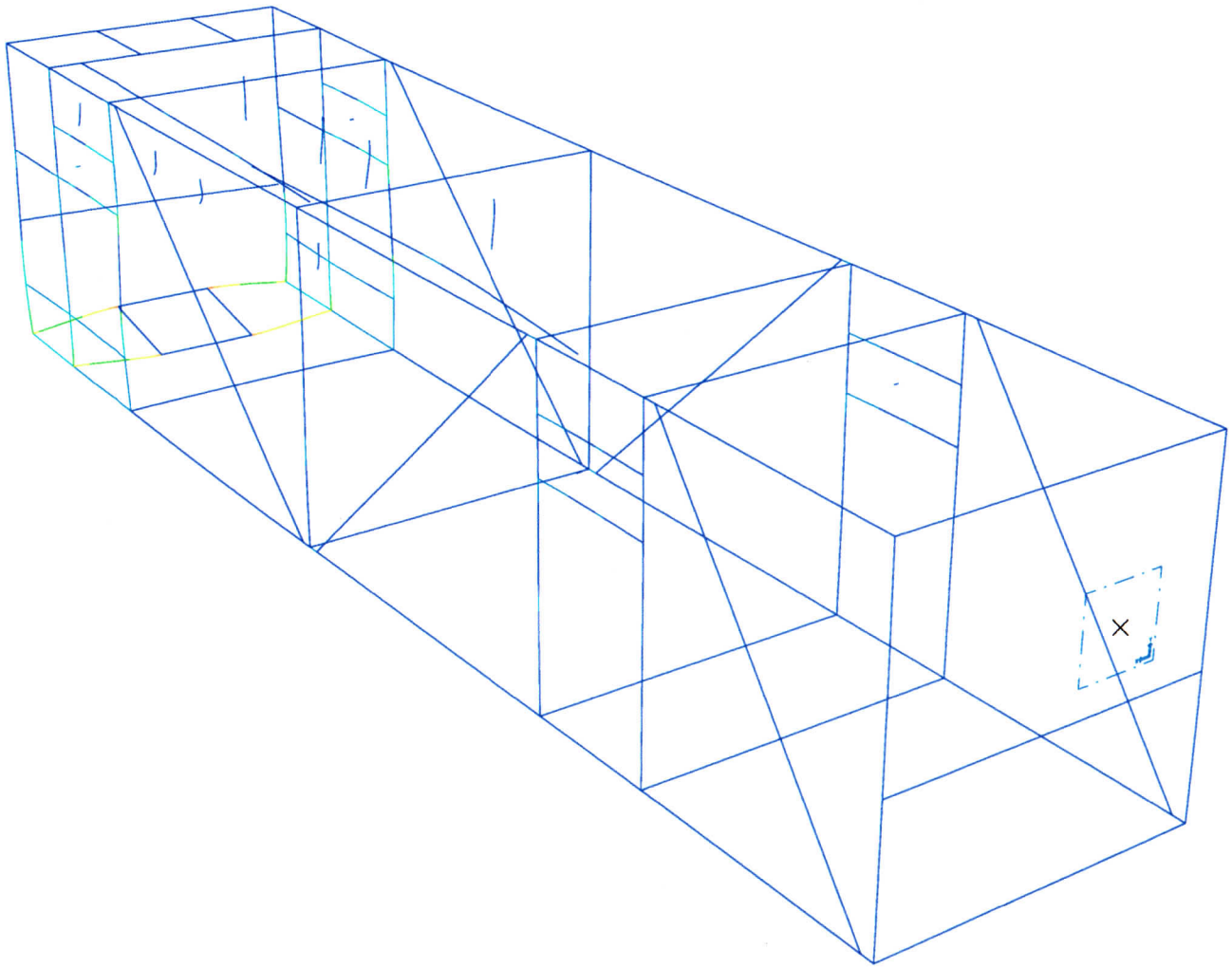

1.61D+03

1.43D+03

1.25D+03

1.07D+03

8.94D+02

7.16D+02

5.37D+02

3.58D+02

1.79D+02

4.48D-14

Y

Z

X

Pg # 25

/cadwhw/home01/ms_villegas/TARGET_BAFFLE_CARRIER_12TH.mf1

RESULTS: 3- B.C. 1,STRESS_3,LOAD SET 1
STRESS - VON MISES MIN: 1.04E-01 MAX: 6.50E+02
DEFORMATION: 1- B.C. 1,DISPLACEMENT_1,LOAD SET 1
DISPLACEMENT - MAG MIN: 4.96E-06 MAX: 1.91E-03
FRAME OF REF: PART

VALUE OPTION:ACTUAL

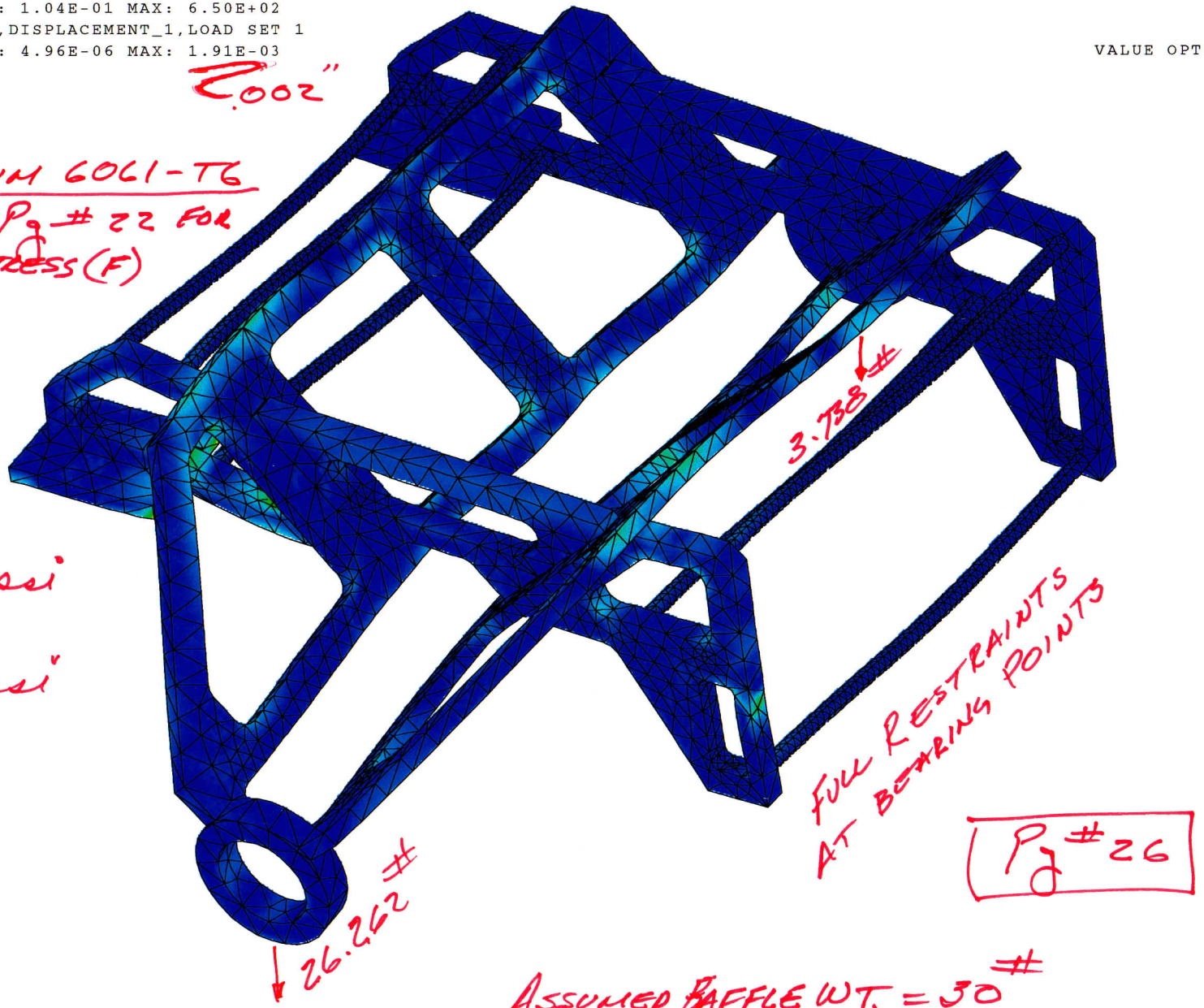

MAT'L: ALUM 6061-T6
REFER TO Pg #22 FOR ALLOWABLE STRESS (F)

$f_{VM} = 650$ psi

$f_v = 335$ psi

ASSUMED BAFFLE WT. = 30#

/cadwhs/server04/ms_villegas/ENGG_NOTE.mf1

RESULTS: 2- B.C. 1,STRESS_2,LOAD SET 1
STRESS - VON MISES MIN: 3.72E-02 MAX: 1.14E+03
DEFORMATION: 1- B.C. 1,DISPLACEMENT_1,LOAD SET 1
DISPLACEMENT - MAG MIN: 0.00E+00 MAX: 1.15E-02
FRAME OF REF: PART

MAT'L: ALUM 6061-T6
REFER TO Pg #22 FOR ALLOWABLE STRESS (F).

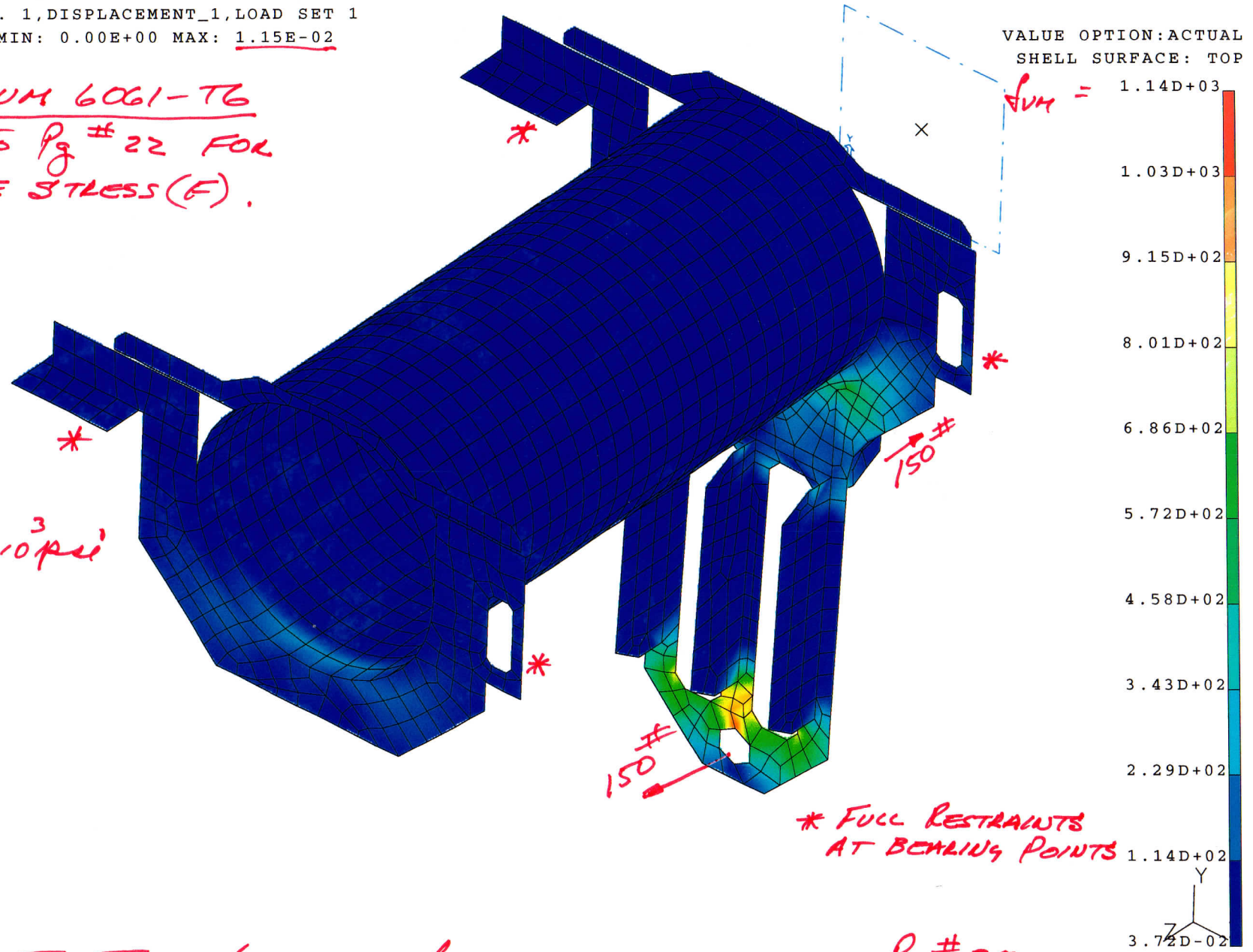

$f_{VM} = 1.14 \times 10^3$ psi

$f_v = 644$

$y_{max} = .012$

* FULL RESTRAINTS AT BEARING POINTS

TGT TUBE & CRADLE MODEL

Pg #27