Fermilab

Revision 1.0

1/21/1999

Particle Physics Division

Engineering and Technical Teams

Mechanical Support Engineering Note

Number: MD-ENG-03-011 Date: 5/19/03

Project: E 907 Project Internal Reference:

Title: I BEAM SUPPORT FOR E907 TARGET PILE

Author(s): JIM KILMER

Reviewer(s): RWILD

Key Words:

Abstract/Summary:

Applicable Codes:

AISC MANUAL OF STEEL CONSTRUCTION 9th EDITION

FERMILAB ENGINEERING NOTE	SECTION	PROJECT	SERIAL-CATEGORY	PAGE 1
SUBJECT		NAME		
		DATE	REVISION DATE	

TOTAL WEIGHT. #1 24" X 100" X 8.25" = (19,800 in³)(.281 lb/in³).

= 5563.8 lbs

#2 = SAME = 5563.8 lbs

#3 = 44 in X 100" X 8.25" = = 10,200.3 lbs

#4 SAME AS #3 = 10,200 lbs

31,528.2

USE A 5th ONE ON TOP 10,200 lbs

USE A 6th ONE ON BOTTOM 10,200

TOTAL 51,900 lbs

= 26 TONS

USE THIS LOAD. ⇒ GIVES 16" TOP & BOTTOM & 22-24" ON SIDES

BOTTOM BEAMS W12"X58 102 in LONG

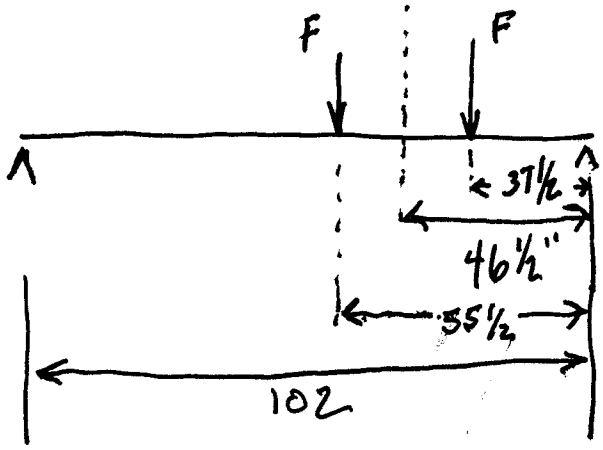

$F = \frac{wt}{4} = \frac{52{,}000 \text{ lbs}}{4}$

$= 13{,}000 \text{ lbs}$

USE CASE 10 pg 2-299 OF AISC.

$P = F = 13{,}000 \text{ lbs}$ $\quad a = 102 - 55\tfrac{1}{2} = 46.5''$ $\quad b = 37.5''$ $\quad \ell = 102$

$R_1 = \frac{P(\ell - a + b)}{\ell}$ $\qquad R_2 = \frac{P}{\ell}(\ell - b + a)$

$= \frac{13{,}000(102 - 46.5 + 37.5)}{102}$ $\qquad = \frac{13000(102 - 37.5 + 46.5)}{102}$

$= 11{,}853 \text{ lbs}$ $\qquad = 14147 \text{ lbs}$

check $26{,}000 \text{ lbs} = 11{,}853 + 14{,}147 = 26{,}000 \text{ lbs} \Rightarrow$ OK.

$M_1 = R_1 a = (11{,}853 \text{ lbs})(46.5'')$ $\qquad M_2 = R_2 b = (14147 \text{ lbs})(37.5'')$

$= 551{,}164 \text{ lb-in}$ $\qquad = 530{,}512 \text{ lb in}$

MAX MOMENT $= 551{,}164$ lb-in $\qquad$ for W12X58 $S = 78 \text{ in}^3$

$\sigma = \frac{M}{S} = \frac{551{,}164 \text{ lb in}}{78 \text{ in}^3}$

$= 7066 \text{ PSI}$ MAX $F_b = \frac{F_y}{3} = \frac{36{,}000 \text{ PSI}}{3} = 12{,}000 \text{ PSI}$

$\therefore$ THIS BEAM LOADING IS OK.

NEXT UP LOOK AT W18X86

SINCE THE W18's HAVE A BEAM BELOW AND A BEAM ABOVE CROSSING THEM WE ONLY NEED TO CONCERN OURSELVES WITH THE STABILITY OF THE WEBS.

GET THE LOAD. LOAD R = $\frac{52{,}000 \text{ lbs}}{4}$ = 13,000 lbs

AT ANY CORNER OF THE LOAD.

FOR W18X86 $t_w = .480$ in $t_f = .770$ in $F_{yc} = F_{yw} = F_y = 36$ KSI

FROM AISC USE CHAPTER K pg 5-80

K1.2 LOCAL FLANGE BENDING

$$t_f = .770 \text{ in} > 0.4\sqrt{\frac{P_{bf}}{F_{yc}}} = 0.4\sqrt{\frac{5/3\,(13 \text{ KIP})}{36 \text{ KSI}}} = .31 \text{ in}$$

∴ THIS CRITERIA DOES NOT REQUIRE STIFFENERS

K1-3 LOCAL WEB YIELDING

$$\frac{R}{t_w(N+2.5k)} = \frac{13.0 \text{ kip}}{(.480)(12+2.5\times1.4375)} \qquad N = 12 \text{ in} \qquad k = 1\tfrac{7}{16} = 1.4375$$

$$= 1.73 \text{ ksi} \leq F_y \times .66 = 36 \times .66 = 23.7 \text{ KSI}$$

∴ THIS CRITERIA DOES NOT REQUIRE STIFFENERS

K1-4 WEB CRIPPLING

$$\text{LOAD LIMIT} = 34 t_w^2 \left[1 + 3\left(\frac{N}{d}\right)\left(\frac{t_w}{t_f}\right)^{1.5}\right] \sqrt{F_{yw}\, t_f/t_w}$$

$$= 34(.480 \text{ in})^2 \left[1 + 3\left(\frac{12 \text{ in}}{18 \text{ in}}\right)\left(\frac{.480 \text{ in}}{.770 \text{ in}}\right)^{1.5}\right] \sqrt{36\left(\frac{.480 \text{ in}}{.770 \text{ in}}\right)}$$

$$= 34(.23)[3.95] \quad 4.737 = 146 \text{ KIPS}$$

SINCE 146 KIPS >> 13 KIPS THIS CRITERIA DOES NOT REQUIRE STIFFENERS

K1-5 BECAUSE FLANGES ARE NOT RESTRAINED

$$\left(\frac{d_c}{t_w}\right)\left(\frac{\ell}{b_f}\right) = \frac{(15.5\,in)}{(.48\,in)}\frac{(76\,in)}{(11.09\,in)}$$

$$= 22.5$$

where $d_c = d - 2k$
$= 18.39 - 2(1.4375)$
$= 15.5\,in$
$\ell = 76\,in$
$b_f = 11.09\,in$

HOWEVER SINCE 22.5 >> 1.7 NO NEED TO CHECK K1-7.

K1-6 COMPRESSION BUCKLING OF THE WEB

$$\frac{4/100\, t_{wc}^3 \sqrt{F_{yc}}}{P_{bf}} = \frac{4/100\,(.48\,in)^3\sqrt{36\,ksi}}{5/3\,(13\,kip)} = 125.5\,in >> d_c = 15.5\,in$$

∴ NO STIFFENERS ARE REQUIRED ON THE W18X86 BEAMS.

MUST NOW REPEAT THE ABOVE FOR THE W12X58 BEAM

for W12x58 $t_w = .36\,in$ $b_f = 10.01\,in$ $t_f = .640\,in$ $k = 1.375\,in$ $d = 12.19\,in$

LOCAL FLANGE BENDING (K1-1)

$t_f = .640\,in$ MUST BE LARGER THAN $0.4\sqrt{\frac{P_{bf}}{F_{yc}}} = 0.4\sqrt{\frac{5/3\,(13\,kip)}{36\,ksi}} = .31\,in$

∴ NO STIFFENER IS REQUIRED

LOCAL WEB YIELDING (USE LARGEST REACTION FORCE FROM PAGE 2)

$$\frac{R}{t_w(N+2.5k)} = \frac{14.1\,kip}{(.36\,in)(10\,in + 2.5\times 1.375\,in)} = 2.9\,ksi << .66\times F_y = .66\times 36\,ksi = 23.7\,ksi$$

∴ NO STIFFENERS ARE REQUIRED

WEB CRIPPLING

ACTUAL $R = 14147 \text{ lbs}$ MUST BE LESS THAN

$$34 t_w^2 \left[1 + 3\left(\frac{N}{d}\right)\left(\frac{t_w}{t_f}\right)^{1.5}\right] \sqrt{F_{yw} \frac{t_f}{t_w}} = 34 (.36\text{in})^2 \left[1 + 3\left(\frac{10\text{in}}{12.19\text{in}}\right)\left(\frac{.36\text{in}}{.64\text{in}}\right)^{1.5}\right] \sqrt{36 \frac{(.64\text{in})}{(.36\text{in})}}$$

$$= 4.4 \left[2.04 \right] (8)$$

$$= 71.8 \text{ KIPS}$$

OK SINCE $14.1 \text{ KIPS} \ll 71.8 \text{ KIPS}$ & NO STIFFENERS REQUIRED.

NOW SIDESWAY WEB BUCKLING

CALCULATE $\left(\frac{d_c}{t_w}\right)\left(\frac{l}{b_f}\right) = \left(\frac{9.44\text{in}}{.36\text{in}}\right)\left(\frac{102\text{in}}{10.01\text{in}}\right) = 267.2$

$d_c = d - 2k$
$= 12.19\text{in} - 2 \times 1.375\text{in}$
$= 9.44\text{in}$

$l = \sim 102\text{ in}$

$\therefore$ WE DO NOT HAVE A PROBLEM WITH THIS
AS $267.2 \gg 2.3$ OR 1.7

COMPRESSION BUCKLING OF THE WEB

$$\frac{4100\, t_{wc}^3 \sqrt{F_{yc}}}{P_{bf}} = \frac{4100\,(.36\text{in})^3 \sqrt{36\text{ksi}}}{5/3\,(14.1\text{KIP})} = 48.8\text{in}$$

SINCE $48.8\text{in} \gg d_c = 9.44\text{in}$ THEN NO STIFFENER IS REQUIRED.

FOR UPPER BEAM CONSIDER USING W8 X 35 I BEAMS
THEN $d = 8.12\,in$ $t_w = .310\,in$ $t_f = .495\,in$ $k = 1.00\,in$ $b_f = 8.020\,in$
$N = 10\,in$

NOW K1.2 LOCAL FLANGE BENDING

$$t_f = .495\,in \overset{?}{>} 0.4\sqrt{\frac{P_{bf}}{F_{yc}}} = \sqrt{\frac{5/3(13\,kip)}{36\,ksi}} = .31\,in$$

∴ THIS CRITERIA DOES NOT REQUIRE STIFFENERS.

K1-3 LOCAL WEB YIELDING

$$\frac{R}{t_w(N+2.5k)} = \frac{13\,kip}{(.310\,in)(10\,in + 2.5 \times 1\,in)}$$

$$= 3.35\,ksi \ll .66 F_y = 23.7\,ksi$$

∴ THIS CRITERIA DOES NOT REQUIRE STIFFENERS

K1-4 WEB CRIPPLING

$$\text{LOAD LIMIT} = 34(t_w)^2\left[1 + 3\left(\frac{N}{d}\right)\left(\frac{t_w}{t_f}\right)^{1.5}\right]\sqrt{F_{yw}\frac{t_f}{t_w}}$$

$$= .34(.31\,in)^2\left[1 + 3\left(\frac{10\,in}{8.02\,in}\right)\left(\frac{.31\,in}{.495\,in}\right)^{1.5}\right]\sqrt{36\,ksi\left(\frac{.495\,in}{.31\,in}\right)}$$

$$= 34(.096)\left[1.00005\right]\sqrt{5.748 \times 10^1} = 24.7\,kips$$

24.7 KIPS > 13 KIPS SO NO STIFFENERS ARE REQUIRED

K1-5 (ASSUME FLANGES ARE NOT RESTRAINED

$$\left(\frac{d_c}{t_w}\right)\left(\frac{\ell}{b_f}\right) = \left(\frac{6.02\,in}{.31\,in}\right)\left(\frac{42\,in}{8.02\,in}\right)$$

$$= 10 \times 1.6 \gg 2.3 \text{ OR } 1.7)$$

$d_c = d - 2k$
$= 8.02\,in - 2\,in$
$= 6.02\,in$
$\ell = 42\,in$

SO NO NEED TO CHECK K1-5 AND NO STIFFENERS ARE REQUIRED.

THEREFORE WE CAN USE A W8X35 I BEAM TO SUPPORT THE PILE W/ NO STIFFENERS REQUIRED.

REV	DESCRIPTION	DRAWN	DATE
		APPROVED	DATE

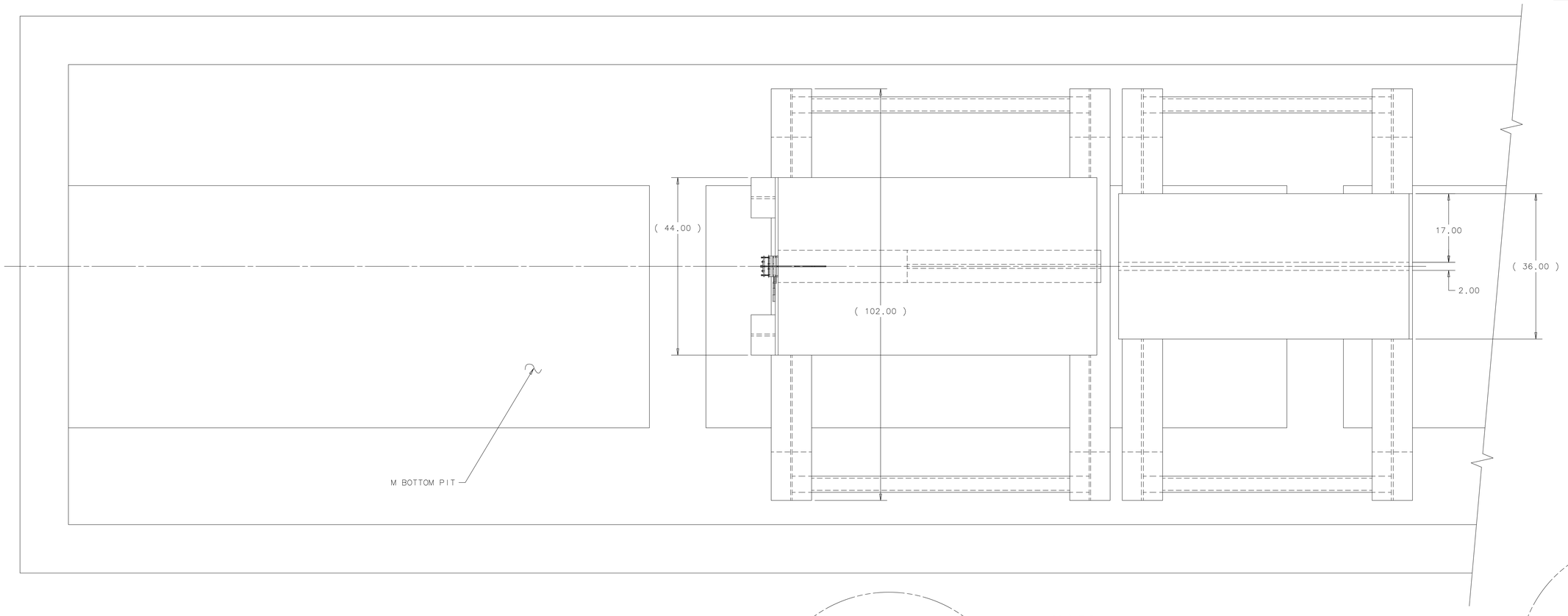

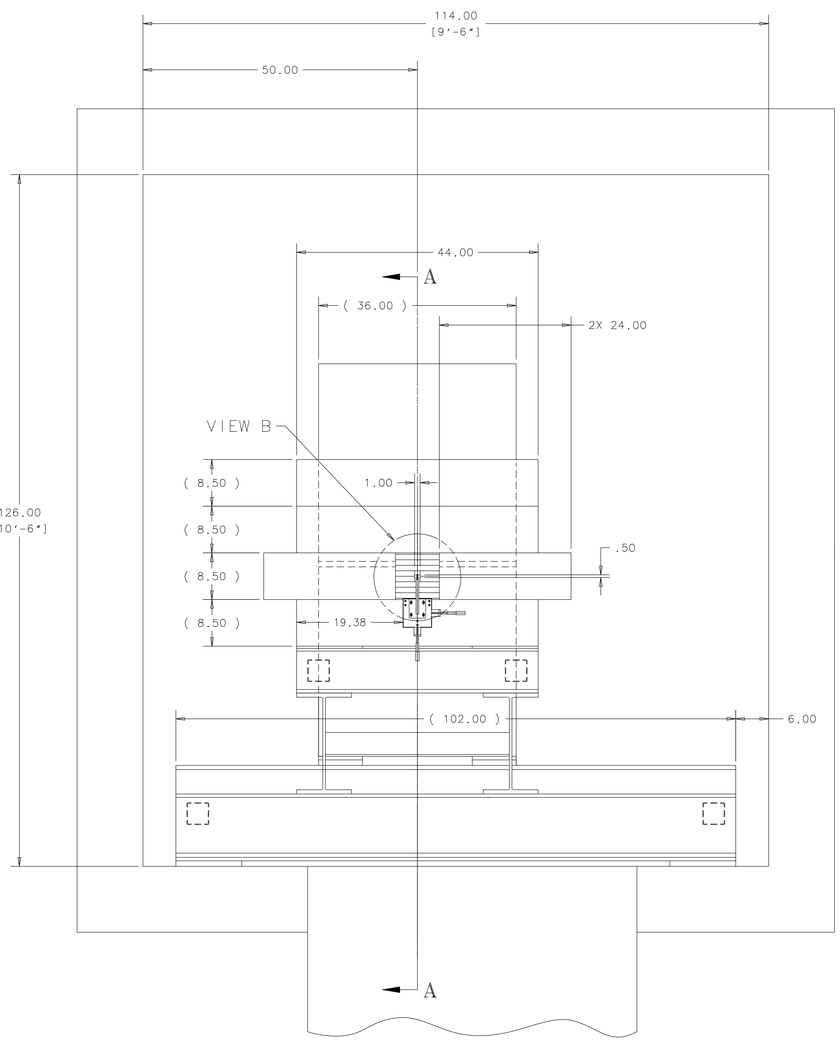

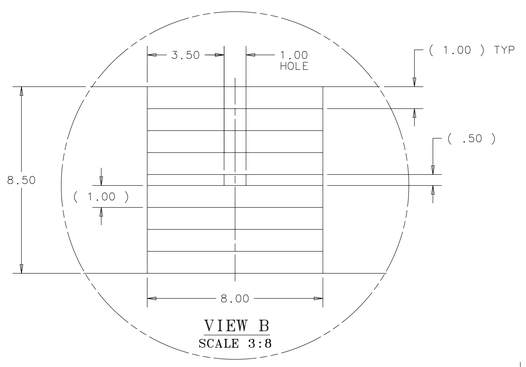

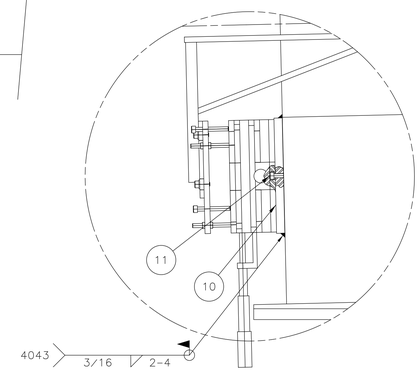

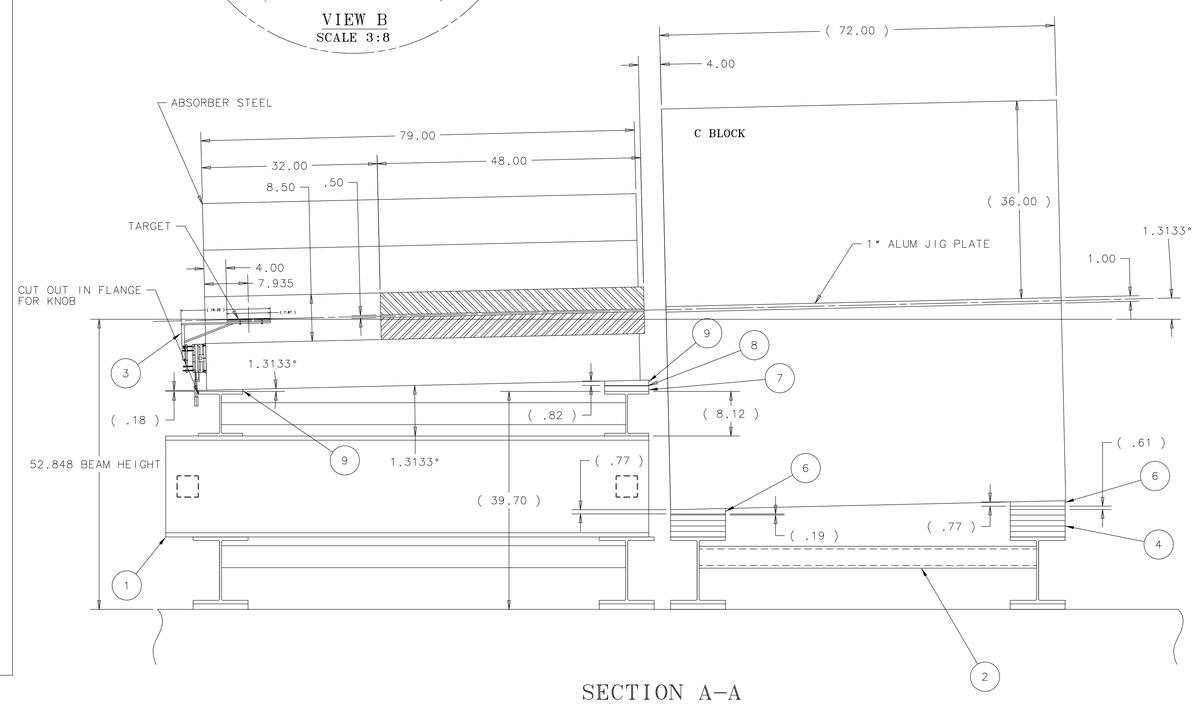

SECTION A-A

ITEM	PART NO.	DESCRIPTION OR SIZE	QTY.
11	COML	#10-24 UNC-2A X3/8 LG. SOCKET HD, SCREW - STEEL	2
10	MB-421168	BASE PLATE	1
9	MB-421164	ABSORBER ANGLE SHIM	4
8	COML	ABSORBER SHIM-ASTM A36 STEEL 1/16 X 8.00 X 10.00 LG.	2
7	COML	ABSORBER SHIM-ASTM A36 STEEL 1 X 8.00 X 10.00 LG.	2
6	MB-421165	C BLOCK ANGLE SHIM	4
5			
4	COML	C BLOCK SHIM-ASTM A36 STEEL 1 X 10.00 X 10.00 LG.	18
3	3907.500 MD-421162	TARGET POSITIONER ASSEMBLY	1
2	MD-421162	ABSORBER C BLOCK STAND	1
1	ME-421163	ABSORBER STAND FULL WELDMENT	1

PARTS LIST

UNLESS OTHERWISE SPECIFIED			ORIGINATOR	J.KILMER	16-MAY-2003
.XX	.XXX	ANGLES	DRAWN	G.SMITH	16-MAY-2003
± .06	± ---	± ---	CHECKED	C.GROZIS	07-JUL-2003
			APPROVED	J.KILMER	09-JUL-2003

1. BREAK ALL SHARP EDGES .015 MAX.
2. DO NOT SCALE DRAWING.
3. DIMENSIONS BASED UPON ANSI Y14.5M-1982
4. ALL DIMENSIONS ARE INCHES
5. MAX. ALL MACH. SURFACES

USED ON

MATERIAL
SEE PARTS LIST ABOVE

FERMI NATIONAL ACCELERATOR LABORATORY
UNITED STATES DEPARTMENT OF ENERGY

PPD/MECHANICAL DEPARTMENT
E907 M-CENTER BEAMLINE
TARGET & ABSORBER ASSEMBLY

SCALE	DRAWING NUMBER	SHEET	REV
3/32	3907.570-ME-421158	1 OF 1	

CREATED WITH : ideas9m3 GROUP: PPD/MECHANICAL DEPARTMENT

Created: 13:16:31 on 18-04-11 (D-M-Y) By: gsmith State: 1-INITIAL