Fermilab

Revision 1.0

1/21/1999

Particle Physics Division

Engineering and Technical Teams

Mechanical Support Engineering Note

Number: MD-ENG-03-009 Date: 5/14/03

Project: E907 Project Internal Reference:

Title: HCAL SUPPORT STAND

Author(s): JIM KIEMER

Reviewer(s): [illegible]

Key Words:

Abstract/Summary:

CALCULATIONS FOR DESIGN OF LEGS FOR LOWER SUPPORT OF E907 HCAL. UPPER STAND IS NOT CONSIDERED BECAUSE IT WAS PREVIOUSLY USED/REVIEWED AS PART OF E871.

Applicable Codes:

AMERICAN INSTITUTE OF STEEL CONSTRUCTORS

MANUAL OF STEEL CONSTRUCTION.

FERMILAB
ENGINEERING NOTE

SECTION	PROJECT	SERIAL-CATEGORY	PAGE
			1

SUBJECT: HCAL SUPPORT STAND

NAME:

DATE:

REVISION DATE:

BEAM HEIGHT = 81.466 in − 51½" = 29.966 in
SO 29.966 in is HEIGHT OF TRACK, ROLLER, SHIM AND LEGS

CHECK ON PLATE LOAD.

$(61 \text{ PLATES})(35.58 \text{ in} \times 39.375 \text{ in})(1 \text{ in thick/PLATE}) = 85{,}458.7 \text{ in}^3$

$wt = \rho V = (85{,}458.7 \text{ in}^3)\left(\frac{\text{ft}^3}{1728 \text{ in}^3}\right)(487 \text{ lbs/ft}^3) = 24{,}085 \text{ lbs.}$

CHOOSE 30,000 lbs AS A GOOD NUMBER INCLUDING FRAME, DETECTORS, LIGHT SHIELD ETC

THEN EACH LEG MUST SUPPORT $\frac{30{,}000 \text{ lbs}}{4} = 7{,}500 \text{ lbs}$

FOR SUPPORT LEGS PER AISC CHOOSE $K = 2$ (WORST CASE)

$\therefore KL = (30 \text{ in})\left(\frac{1}{12 \text{ in/ft}}\right)(2) = 5 \text{ ft}$

SUPPORT LEGS ARE GOING TO BE 5 X 5 X 3/8" STRUCTURAL SQUARE TUBE

FROM AISC pg 3-42 AT 6' LONG THIS TUBE CAN SUPPORT 159 KIPS

THEREFORE AT KL = 5 ft AND A LOAD OF 7.5 KIPS THIS TUBE IS FINE

NOW MUST LOOK AT STABILITY OF LEGS.

ASSUME THAT THE ROLLER LEG HAS BOLTED CONNECTION PLATES ON EACH END. SEE THE ATTACHED DRAWING.

FOR THE MOTION DIRECTION THE MAXIMUM BENDING MOMENT IS EITHER 0.10 X WT OR ROLLER FRICTION (FOR HILMANS USUALLY 0.05 X WT).

$\therefore F = 0.10 \times 30{,}000 \text{ lbs} = 3{,}000 \text{ lbs}$

$M = (3000 \text{ lbs})(\sim 30 \text{ in}) = 90{,}000 \text{ lbs in}$

MOMENT IS RESISTED BY WELDS ON LEG

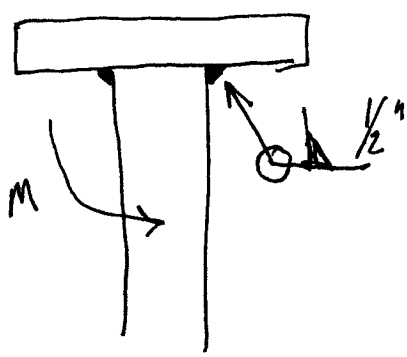

FOR THE MOMENT ASSUME THAT SIDE WELDS DO NOT RESIST MOMENT

THEN $M = 90{,}000 \text{ lb in} = 5 \text{ in} \times F_{WELD}$

$F_{WELD} = 18{,}000 \text{ lbs}$

$A_{WELD} = \left(\frac{.5 \text{ in}}{\sqrt{2}}\right) \times 5 \text{ in} = 1.77 \text{ in}^2$

(TENSION) $\sigma_{WELD} = \frac{F}{A} = \frac{18000 \text{ lbs}}{1.77 \text{ in}^2} = 10{,}182 \text{ PSI}$

USING E70 ROD THEN WELD LIMIT IS $\frac{F_y}{3} = \frac{70 \text{ KSI}}{3} = 23{,}333 \text{ PSI} \gg 10{,}182$

$\therefore$ WELD IS SUFFICIENT.

NOW CHECK THE BOLT FLANGES FOR BOLT STRESS

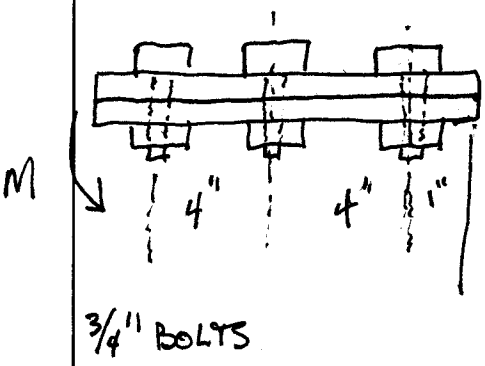

ASSUME A 325 BOLTS AND CALCULATE TENSION IN BOLTS ASSUMING ALL BOLTS SHARE LOAD EQUALLY.

SUM MOMENTS

$$M = 90{,}000 \text{ in lbs} = 2 \times T \times 1'' + 2 \times T \times 5'' + 2 \times T \times 9''$$

$$= 2''T + 10''T + 18''T = 30''T$$

$$3{,}000 \text{ lb} = T$$

FROM AISC TABLE 1-A, & 4-3, FOR A-325 BOLTS 3/4" NOMINAL THE ALLOWABLE LOAD IS 19.4 KIPS >> 3 KIPS. THERE IS SUFFICIENT MARGIN TO ALLOW THE BOLTS TO HAVE SOME UNEVEN SHARING OF LOAD AND STILL HAVE SAFETY FACTOR.

NOTICE THAT THIS LOAD IN THIS DIRECTION IS EXTREME. THE LEVEL OF MOMENT WOULD BE ABLE TO MOVE THE CALORIMETER DOWN THE TRACK, AS LONG AS THE TRACK IS CLEAR.

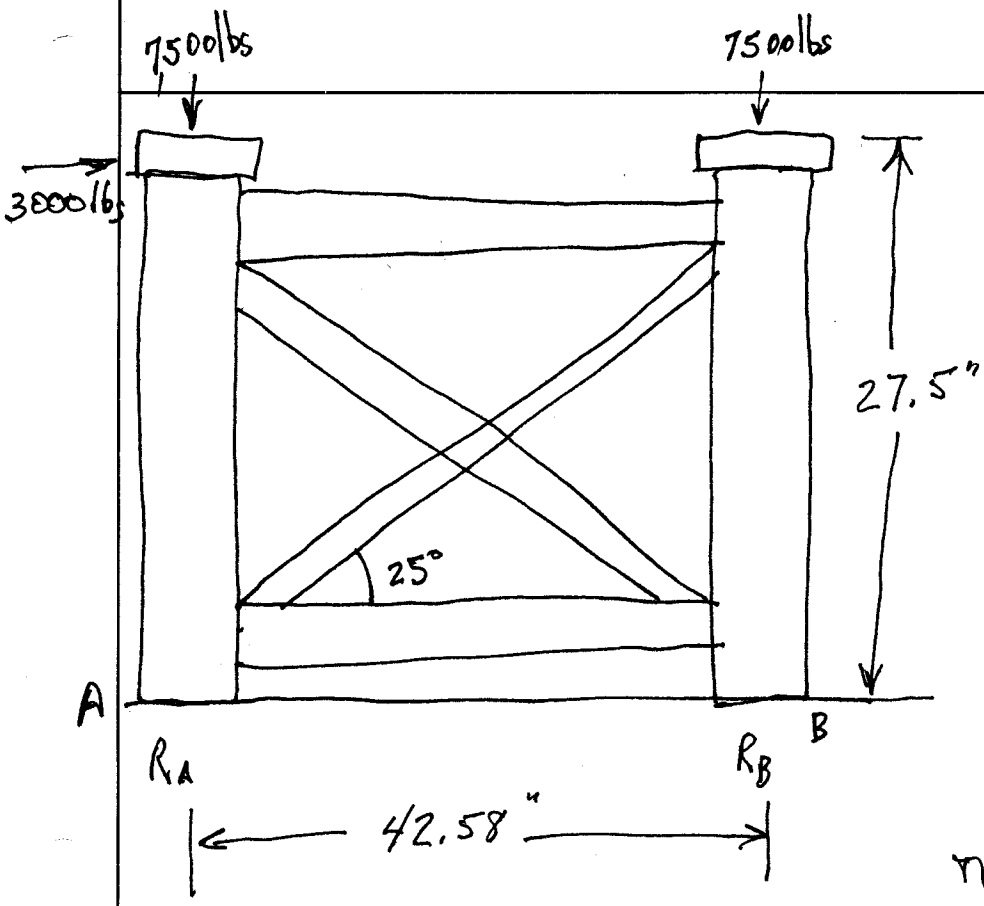

TO CHECK FOR TIPPING FIRST DO MOMENT CALCULATION BALANCE ie ABOUT CORNER B.

$(7500\,lbs)(42.58") \overset{?}{>>} (3000\,lbs)(27.5")$

3.19×10^5 in lb $>>$ 8.25×10^4

THIS IMPLIES THAT THE FRAME IS STABLE AND WILL NOT TIP AT THIS FORCE. NOTICE THAT THE EFFECT IS THE SAME IF THE 3000 lb FORCE IS APPLIED AT THE CENTER OF MASS OF THE DETECTOR AS IN

$(7500\,lbs)(42.58\,in) \overset{?}{>>} (3000\,lbs)(81.466\,in)$

3.19×10^5 in lbs $>>$ 2.44×10^5 in lbs

NOW CHECK IF THE FRAME CAN FAIL BY PARALLELOGRAMMING. FOR THIS CALCULATION ASSUME THAT THERE IS NO CONTRIBUTION FROM THE CROSS MEMBER IN COMPRESSION, ONLY THE TENSION MEMBER WORKS.

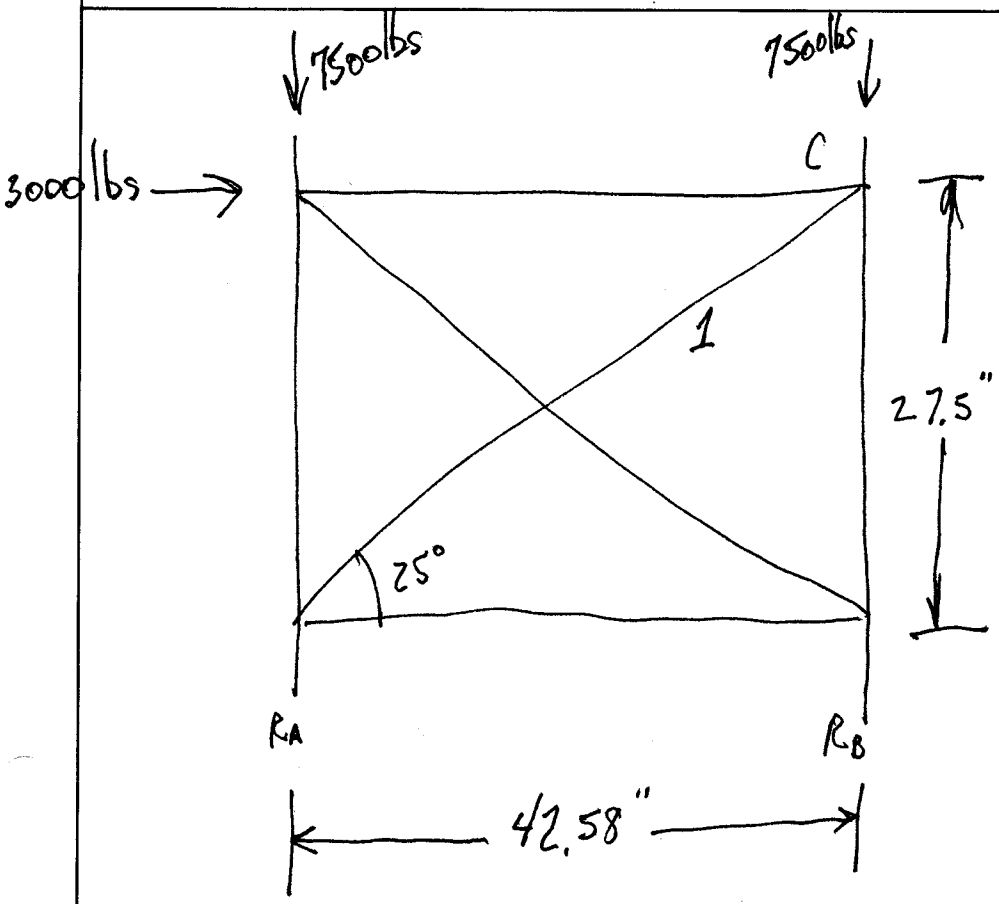

FIND R_A AND R_B

MOMENT ABOUT B

$(7500\,lbs)(42.58'') = R_A(42.58'') + (3000\,lbs)(27.5'')$

$R_A = 5{,}562.5\,lbs$

MOMENT ABOUT A

$R_B(42.58'') = (7500\,lbs)(42.58'') + (3000\,lbs)(27.5'')$

$R_B = 9437.5\,lbs$

check $R_A + R_B \overset{?}{=} 15000\,lbs = 5562.5 + 9437.5\,lbs$

$= 15{,}000\,lbs$ so R_A & R_B CHECK

NOW FIND TENSION IN MEMBER 1 AT POINT C

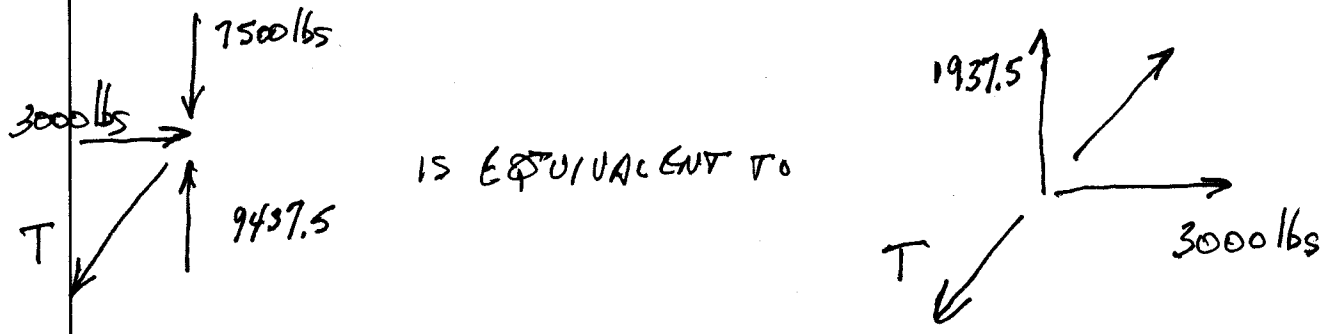

T MUST RESIST THE RESULTANT SHOWN ON THE RIGHT

$$\therefore \quad T = \sqrt{(1937.5\,\text{lbs})^2 + (3000\,\text{lbs})^2}$$

$$= 3570.7\,\text{lbs}$$

NOTE THAT ALL CROSS BRACING IS 3"X2"X 3/16" ANGLE WHOSE CROSS SECTIONAL AREA IS $.902\,in^2$

$$\text{TENSION } \sigma = \frac{T}{A} = \frac{3570.7\,\text{lbs}}{.902\,in^2} = 3958\,\text{PSI}$$

FOR A 36 STEEL IN TENSION USE $F_y/3 = 12{,}000$ PSI STRESS LIMIT.

$\Rightarrow$ BRACING IS OK BECAUSE 3958 PSI $<<$ 12,000 PSI

IN THIS DIRECTION (ACROSS THE BEAM) LOOK AT BOLTS IN FLANGES.

NOTE THAT IN BOTH UPPER FRAME AND THESE LEG SUPPORTS THAT THE STRUCTURES ARE VERY STIFF ACROSS THE BEAM DIRECTION.

A 3000 lbs LOAD HORIZONTALLY AT CENTER OF MASS WOULD THEN TRY TO PIVOT AROUND THE EDGE OF ONE LEG (POINT A)

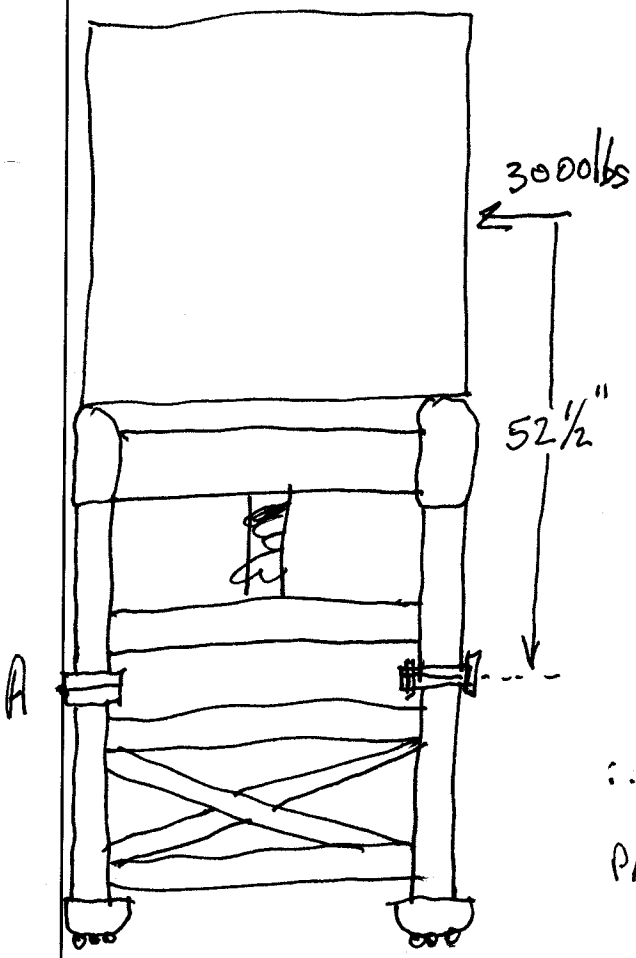

MOMENT PRODUCED IS

$M = (3000\,lbs)(52.5\,in) = 157{,}500\,in\,lbs$

THIS IS MATCHED BY THE BOLTS IN TENSION

BOLTS ARE AT THESE DISTANCES IN ROWS OF 3: 8.75 in, 42.75", 50.5 in

ASSUME ALL BOLTS EQUALLY SHARE TENSION THEN

$M = 157{,}500\,in\,lb = 3T \times 8.75\,in + 3T \times 42.75\,in + 3T \times 50.5\,in$

$157{,}500\,in\,lb = 306\,in\,T$

$514.7\,lbs = T$

∴ BOLTS IN THIS DIRECTION ARE FINE. (SEE PAGE 3)

REV	DESCRIPTION	DRAWN	DATE
		APPROVED	DATE
A	ITEMS 16,17,& 18 ADDED	G SMITH	7/3/03
		D.TOUSIGNANT	7/9/03

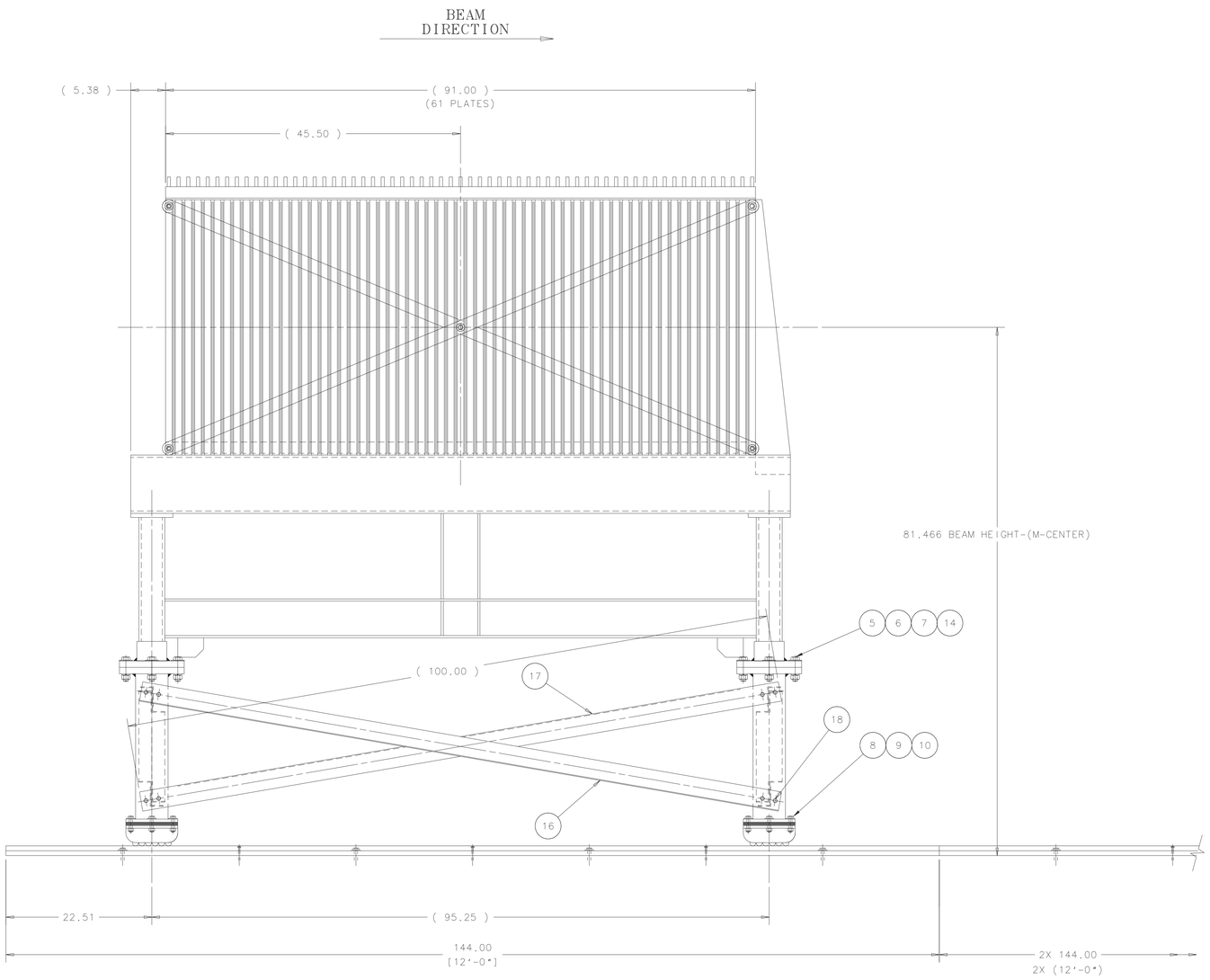

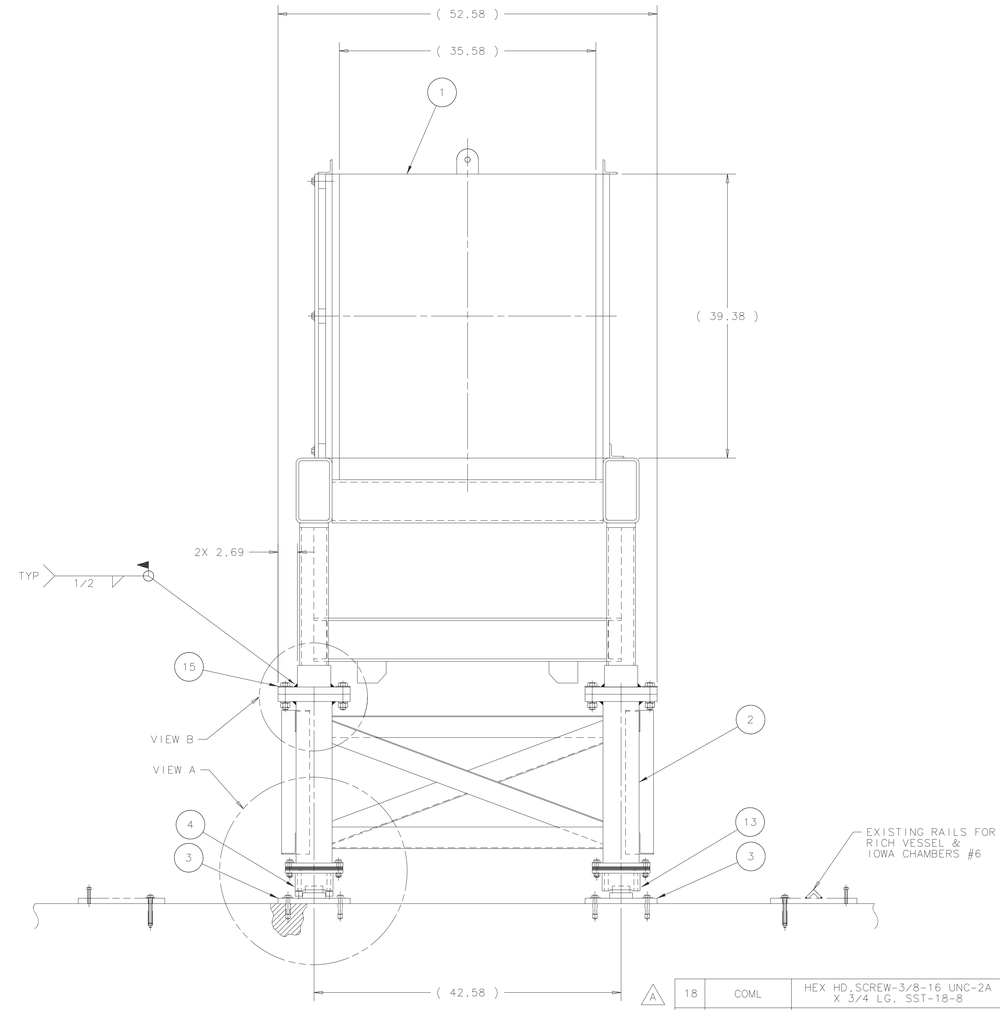

ITEM	PART NO.	DESCRIPTION OR SIZE	QTY.
18	COML	HEX HD.SCREW-3/8-16 UNC-2A X 3/4 LG. SST-18-8	16
17	MC-421175	SIDE ANGLE BRACE MOD.	2
16	MC-421174	SIDE ANGLE BRACE	2
15	MC-421151	UPPER MOUNTING PLATE	4
14	COML	LOCK WASHER - 3/4 SCREW SIZE SST-18-8	24
13	COML	HILMAN ROLLER - #8-OT (EXISTING)	2
12	COML	HILTI DROP-IN ANCHOR,1/2" HILTI #000457549	72
11	COML	HEX HD.SCREW-1/2-13 UNC-2A X 3" LG. SST-18-8	72
10	COML	HEX NUT - 1/2-13 UNC-2B SST-18-8	24
9	COML	FLAT WASHER - 1/2 SCREW SIZE SST-18-8	96
8	COML	HEX HD.SCREW-1/2-13 UNC-2A X 2 1/4 LG. SST-18-8	24
7	COML	HEX NUT - 3/4-10 UNC-2B SST-18-8	24
6	COML	FLAT WASHER - 3/4 SCREW SIZE SST-18-8	24
5	COML	HEX HD.SCREW-3/4-10 UNC-2A X 3 1/4 LG. SST-18-8	24
4	COML	HILMAN ROLLER - #8-OT ACCU-ROLL TYPE R FLAT RAIL (EXISTING)	2
3	9220.871 MD-327757	TRACK PLATE ASSY	6
2	MD-397770	LOWER FRAME WELDMENT	2
1	9220.871 ME-327756	ABSORBER WELDMENT (EXISTING)	1

PARTS LIST

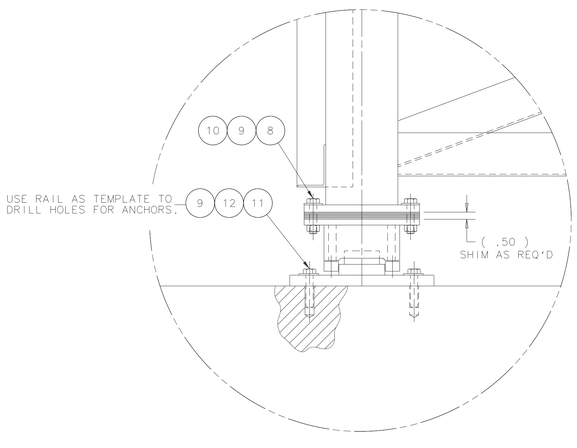

VIEW A
SCALE: 1/4

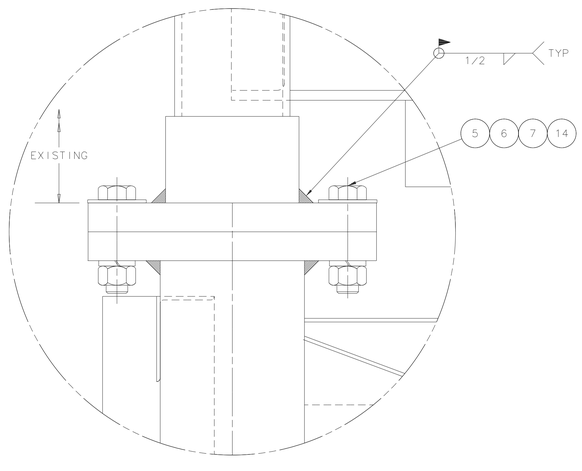

VIEW B
SCALE: 1/2

UNLESS OTHERWISE SPECIFIED			ORIGINATOR	J.KILMER	28-APR-2003
.XX	.XXX	ANGLES	DRAWN	G.SMITH	28-APR-2003
± ---	± ---	± ---	CHECKED	D.TOUSIGNANT	02-MAY-2003
1. BREAK ALL SHARP EDGES .015 MAX. 2. DO NOT SCALE DRAWING. 3. DIMENSIONS BASED UPON ANSI Y14.5M-1982. 4. ALL DIMENSIONS ARE INCHES 5. MAX. ALL MACH. SURFACES			APPROVED	J.KILMER	02-MAY-2003
			USED ON	9200.001-ME-397568	
			MATERIAL		

NOTICE: IMAGE OBTAINED FROM FERMILAB WEB SITE
This information is provided for REFERENCE use only. Not for MANUFACTURE, or DESIGN INFORMATION. All information contained in this document represents work sponsored by an agency of the U.S. Government. Neither the U.S. Government nor any agency thereof, nor Universities Research Association, Inc., nor any of their employees or officers, makes any warranty, express or implied, or assumes any legal liability or responsibility for the accuracy, completeness, or usefulness of any information, apparatus, product or process disclosed, or represents that its use would not infringe privately owned rights.

FERMI NATIONAL ACCELERATOR LABORATORY
UNITED STATES DEPARTMENT OF ENERGY

PPD/MECHANICAL DEPARTMENT
E907 M-CENTER BEAMLINE
CALORIMETER ASSEMBLY

SCALE	DRAWING NUMBER	SHEET	REV
1 : 8 & NOTED	3907.500-ME-397777	1 OF 1	A

CREATED WITH : Ideas11NXSeries | GROUP: PPD/MECHANICAL DEPARTMENT