Fermilab

Particle Physics Division
Mechanical Department Engineering Note

Number: MD-ENG-320 Date: 6 April 2011

Project Internal Reference:

Project: NOVA

Title: Ash River Pivoter Free Body Diagrams

Author(s): Dave Pushka

Reviewer(s):

Key Words:

Applicable Codes: AISC 9th Edition

Abstract Summary:

This note shows describes calculations on the structure of the NOvA Ash River Pivoter. It is a more complete revision to the calculations documented in engineering note 304 which addresses the heavier modules and the anticipated heavier table.

Refer to drawing 3929.220-ME-48692 which shows the lower portion of the block pivoter for use at Ash River. This drawing (and those called out in the bill of material on this drawing) is available at:

http://www-admscad.fnal.gov/MSDMain/cgi-bin/TP_PPDifind-web.pl

Discussion:

Engineering note 184 dated 21 April 2009 was originated to document and calculate the NOvA Ash River Pivoter loads. This engineering note 320 is based on that earlier work, but includes new values for the weights of the extrusions, new values for the weight of the Ash River pivoter table (table design is nearing the end of the fabrication drawing production effort, so the weight is better known than it was previously) and several additional calculations prepared as the FHEP pivoter was built.

Loads calculated in this engineering note are used as design inputs for individual components examined with FEA and documented in other engineering notes including numbers 321, 322, 323 and others.

The excel spread sheet where the calculations are made for the Ash River Pivoter is divided into several sections as listed below:

Section 1) List the inputs to the design driven by the detector geometry.

Section 2) List the center of gravity of the three major loads seen by the pivoter table during rotation and the moments resulting from each load.

Section 3) Sums the rotation moments from each major component and calculates a location for the combined center of gravity of the block, table and pallet.

Section 4) List the geometry choices made for the ends of the pivot cylinders.

Section 5) Calculates the geometry of the cylinders when the Table is horizontal and again when the Table is vertical. This section includes hand drawn sketches to show each distance and angle used in the calculations.

Section 6) Repeats the calculations in Section 5, but at many rotation angles; from the table rotated 2 degrees past horizontal to vertical. These calculations are used to generate the cylinder load and pressure as a function of table rotation angle.

- Table 1) Calculates cylinder geometry at each angle
- Table 2) Calculates moments from the Table, Block and Pallet at each rotation angle.

Table 3) Calculates the combined cylinder load (load exerted by both cylinders together) needed to balance the moments calculated in Table 2

Table 4) Provide the same calculations as in table 3, but for each cylinder and assumes the load is shared equally by each cylinder.

Graph 1) Graphs the cylinder load and extension values calculated in Table 4.

Section 7) List the key dimensions of the pivot cylinders manufactured by Phelps Industries, Inc.

Section 8) List the key dimensions of the Upper Frame Weldment. Fabrication drawing for the Upper Frame Weldment is 3929.000-ME-486361.

Sketch 6) Show the key dimensions of the Upper Frame and the reactions at the Table Pivot and Cylinder Stationary Pivot.

Table 5) Calculate the horizontal and vertical reactions at the table pivot and cylinder stationary connection.

Table 6) Hydraulic Cylinder pressure as a function of table rotations for loading due to the block and for the bare table with a pallet.

Section 9) List the geometry data from the Upper Frame Rear Pin to the Center of Gravity for the Block, Table, Pallet and Upper Frame.

Section 10) Calculate the reactions on the Forward and Rear Pins connecting the Upper and Lower Frames.

Section 11) List key Lower Frame dimensions and calculates the required moment of inertia to keep the bending stresses below the AISC ASD allowable values.

Section 12) Section 12a calculates the moment of inertia of the forward portion of the lower frame by hand. Section 12b shows the results of using Ideas beam properties to calculate the same moment of inertia. Results match.

Section 13 Rear Pin Support Bracket Mounting Bolt Sizing

Section 14 Rear Pin Support Bracket Weld Sizing

Section 15 Calculation of the Upper Frame Rotation due to Kneeling Cylinder Motion

Section 16 Loads on the Lower Frame Roller and Drive Traction Requirements

Section 17 Lateral Loads on the Ash River Pivoter

The calculations were performed in MS Excel.

Drawings were made in Ideas and PDF versions posted on the ADMS I-find website as mentioned above.

Because of formatting problems inserting PDF documents into MS word (drawings are often missing most of the information and excel spread sheets do not maintain page breaks) this engineering note has been assembled as a PDF document using Adobe Acrobat.

REV	DESCRIPTION	DRAWN	DATE
		APPROVED	DATE

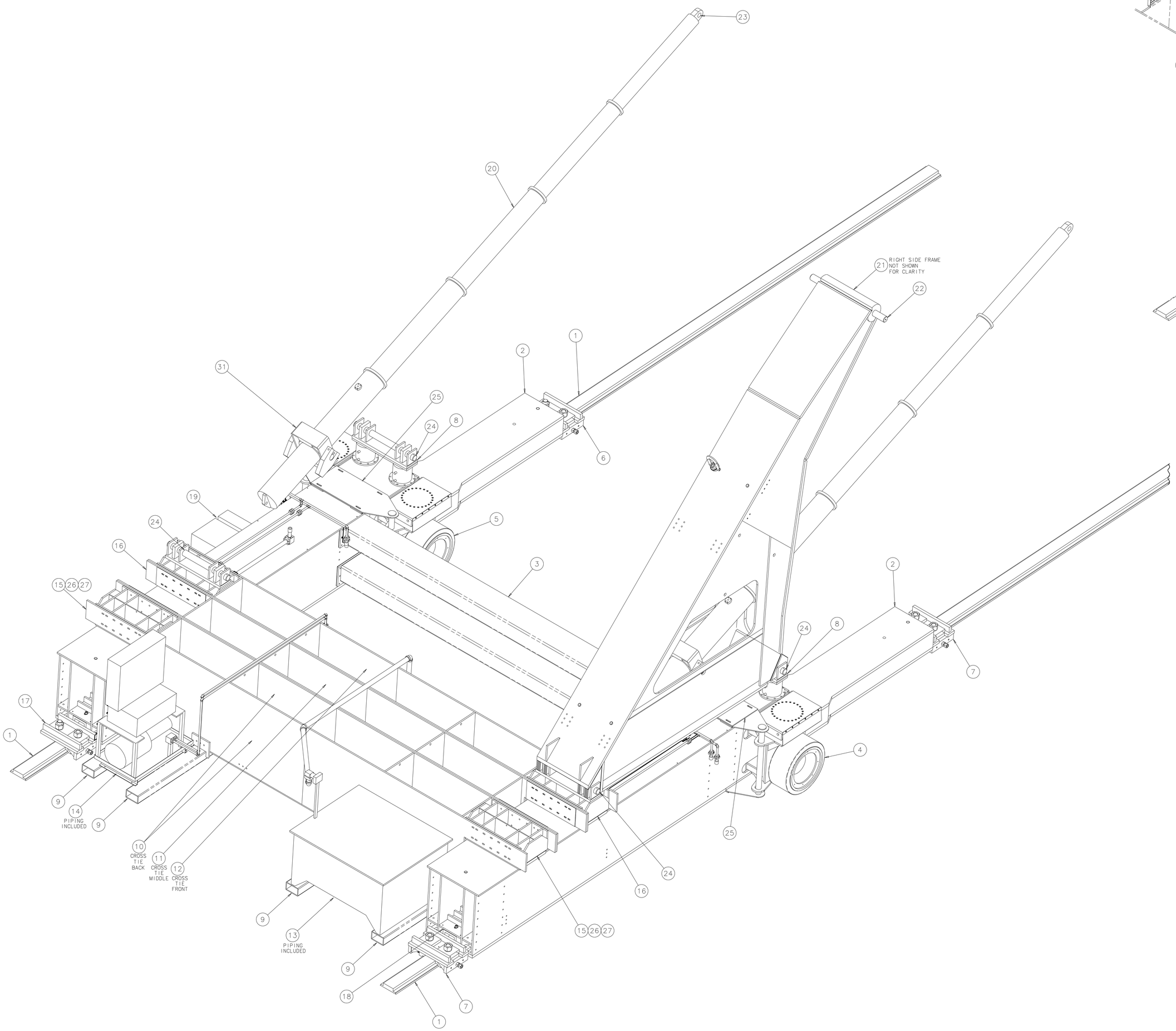

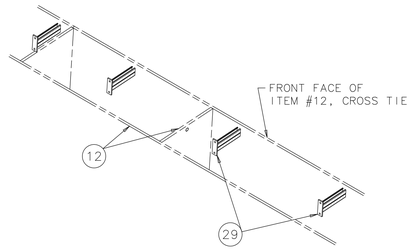

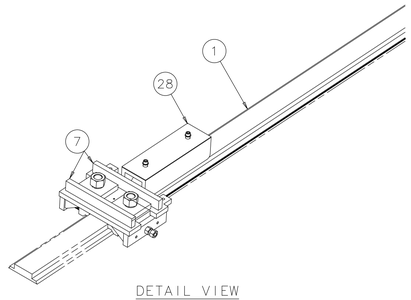

DETAIL VIEW

FRAME WELDMENT NOT SHOWN FOR CLARITY

ITEM	PART NO.	DESCRIPTION OR SIZE	QTY.
30	COML	CYLINDER TRUNNION - PHELPS DWG NO 1018-C	2
29	P2542	UNISTRUT BRACKET, SLOTS UP & DN.	6
28	MC-486961	ROLLER BEARING, HILMAN, 300-XT	6
27	MC-486950	SHIM-2.00, CYLINDER PIVOT BRACKET	4
26	MC-486949	SHIM-1.00, CYLINDER PIVOT BRACKET	4
25	MB-486441	SHIM-DRIVE TORQUE RESTRAINT PLATE	4
24	MC-466592	PIN, ø4.00, FRONT PIVOT	4
23		PIN, ø3.00, CYLINDER ROD END	2
22	MC-466590	PIN, ø4.00, MAIN PIVOT	2
21	ME-486361	FRAME UPPER 4 FLANGE WELDMENT	2
20	COML	HYDRAULIC CYLINDER-PHELPS MODEL 13.25-4-312-T-F-SA-C-75	2
19		KNEELING CYLINDER PWR SUPPLY BOX	1
18	MC-486957	SHIM 1/4THK 300T HILMAN	6
17	MD-486947	PRELOAD GUIDE-SINGLE, LEFT HAND	1
16	ME-466597	BRACKET REAR PIN ASSY 2	2
15	ME-486884	BRACKET REAR 3 WELDMENT	2
14	ME-486977	DRIVE HYDRAULIC POWER UNIT	1
13	ME-489002	CYLINDER POWER UNIT & CONNECTIONS	1
12	ME-486912	FRONT CROSS TIE FRONT	1
11	ME-486933	REAR CROSS TIE MID	1
10	ME-486943	REAR CROSS TIE BACK ASSY	1
9	MD-486900	REAR PLATFORM BEAM ASSY	4
8	MD-466655	KNEELING CYLINDER BRACKET ASSY	2
7	MD-486407	DOUBLE GUIDE ROLLER ASSY	2
6	MD-486399	PRELOAD GUIDE - SINGLE	1
5	MD-486344	DRIVE AND RESTRAINT -2	1
4	MD-486340	DRIVE AND RESTRAINT -1	1
3	MD-486836	PIVOTER TIE FRONT WELDMENT	2
2	ME-466518	FRAME, LOWER WELDMENT 2	2
1		ASH RIVER RAIL (REMOVE ALL LEVELING HARDWARE)	--

PARTS LIST

UNLESS OTHERWISE SPECIFIED			ORIGINATOR	D.PUSHKA	01-MAR-2011
.XX	.XXX	ANGLES	DRAWN	P.POLL	02-MAR-2011
± ---	± ---	± ---	CHECKED		
			APPROVED		

1. BREAK ALL SHARP EDGES .015 MAX.
2. DO NOT SCALE DRAWING.
3. DIMENSIONS BASED UPON ASME Y14.5M-1994
4. MAX. ALL MACH. SURFACES 125
5. DRAWING UNITS: U.S. INCH

USED ON

MATERIAL: SEE PARTS LIST ABOVE

FERMI NATIONAL ACCELERATOR LABORATORY
UNITED STATES DEPARTMENT OF ENERGY

NOVA-EQUIPMENT HANDLING PIVOTER PIVOTER ASSEMBLY

SCALE	DRAWING NUMBER	SHEET	REV
NONE	3929.220-ME-486942	1 OF 1	

CREATED WITH : Ideas12NXSeries GROUP: PPD/MECHANICAL DEPARTMENT

Created: 05:53:44 on 24-03-11 (D-M-Y) By: jerauch State: 1-INITIAL

	A	B	C	D	E	F	G	H
1	**Dave Pushka's Ash River Block Pivoter Calculations April 2011**							
2	**Section 1; Detector Driven Inputs**							
3	**Detector Block Weights and Dimensions and Loads to Table:**							
4	Weight of a PVC Block (empty) Nominal	353,229	pounds	176.6	tons (short)			
5	Weight of a PVC Block (empty) minimal	295,187	pounds	147.6	tons (short)			
6	Weight of a PVC Block (empty) maximum	422,466	pounds	211.2	tons (short)			
7	Weight of a block Used for Calculations below	**422,466**	pounds	211.2	tons (short)			
8	Nominal Thickness of a block	2053.6	millimeters	80.85	inches			
9	Nominal H or W of a Block	15.748	m	620	in	51.6666667	ft	
10	Volume of Block	17,985	ft3					
11	Apparent Density of Empty Block	23.5	#/ft3					
12	Block loading on table when horizontal	158.26	#/square foot					
13								
14	**Section 2; Location of Major Component Center of Gravities with respect to the Table Pivot**							
15	**Geometry of Block relative to Table Pivot:**							
16	Weight of a block Used for Calculations below	422,466	pounds	Maximum weight of the PVC block calculated from the extrusion weights of as-made parts.				
17	Distance from table top to pivot (vertical direction when table horizontal)	8	inches	Positive means that the pivot is below the top surface of the table when the table is horizontal				
18	Vertical Distance from pivot to block c.g when table is horizontal	48.425	inches	equals half the thickness of a block plus the goal distance from the table top to the pivot shown right above				
19	Horizontal Distance from Pivot to block c.g. when table is horizontal (positive number is toward the forks)	-16.000	inches	zero undicates that the pivot is right under the block c.g., positive means that the pivot is towards the forks				
20	Moments Generated by the Block Weight on the Table When Table is Vertical:	20,457,988	in-lbs	Vertical Distance (B16) to block c.g. times the Block weight (B14)				
21	Moments Generated by the Block Weight on the Table When Table is Horizontal:	(6,759,452)	in-lbs	Horizontal Distance (B17) to block c.g. times the Block weight (B14)				
22								
23	**Geometry of Pallet relative to Table Pivot:**							
24	Weight of the Pallet Nominal	27,072	pounds	Pallet weight comes from the Ideas Solid Model of the pallet				
25	Distance from Pallet surfact to Pallet c.g.	3	inches	Pallet c.g. location relative to surface taken from the Ideas 3D				
26	Vertical Distance from pivot to block c.g when table is horizontal	48.425	inches	assumed same as the distance for the PVC block calculated above				
27	Horizontal Distance from Pivot to pallet c.g. when table is horizontal (positive number is toward the forks)	297.000	inches	zero undicates that the pivot is right under the block c.g., positive means that the pivot is towards the forks				
28	Moments Generated by the Pallet Weight on the Table When Table is Vertical:	1,310,967	in-lbs	Vertical Distance (B24) to Pallet c.g. times the Pallet weight (B22)				
29	Moments Generated by the Pallet Weight on the Table When Table is Horizontal:	8,040,384	in-lbs	Horizontal Distance (B25) to Pallet c.g. times the Pallet weight (B22)				
30								
31	**Geometry of Table relative to Table Pivot:**							
32	Weight of Table, Nominal	204,000	pounds	Based on Estimate of Table Weight as Modeled by Ernie Villegas				
33	Vertical Distance from pivot to table c.g when table is horizontal	-5.200	inches	negative means the c.g. is below the pivot elevation when table is horizontal				
34	Horizontal Distance from Pivot to table c.g. when table is horizontal (positive number is toward the forks)	55.000	inches	zero undicates that the pivot is right under the block c.g., positive means that the pivot is towards the forks				
35	Moments Generated by the Table Weight on the Table When Table is Vertical:	(1,060,800)	in-lbs	Vertical Distance (B31) to Table c.g. times the Table weight (B30)				
36	Moments Generated by the Table Weight on the Table When Table is Horizontal:	11,220,000	in-lbs	Horizontal Distance (B32) to Table c.g. times the Table weight (B30)				
37								

	A	B	C	D	E	F	G	H
38	**Section 3; Sum of the Rotation Moments (Torques) Due to C.G. Positions with respect to Table Pivot**							
39	**Combined PVC Block and Pallet Moments:**							
40	Weight of PVC Block and Pallet	449,538	pounds	Sum of cells B16 + B24 to sum the weight				
41	Moments Generated by the Block + Pallet Weight on the Table When Table is Vertical:	21,768,955	in-lbs	Sum of cells B20 + B28 to sum the Moment				
42	Moments Generated by the Block + Pallet Weight on the Table When Table is Horizontal:	1,280,932	in-lbs	Sum of cells B21 + B29 to sum the Moment				
43								
44	**Combined Table, PVC Block and Pallet Moments:**							
45	Weight of Table, PVC Block and Pallet	653,538	pounds	Sum of cells B16 + B24 + B32to sum the weight				
46	Moments Generated by the Block + Pallet + Table Weight on the Table When Table is Vertical:	20,708,155	in-lbs	Sum of cells B20 + B28+ B35 to sum the Moment				
47	Moments Generated by the Block + Pallet + Table Weight on the Table When Table is Horizontal:	12,500,932	in-lbs	Sum of cells B21 + B29+ B36 to sum the Moment				
48								
49	**Location of Combined C.G. values for Table, PVC Block and Pallet:**							
50	Vertical Distance for C.G. ofTable, PVC Block and Pallet	31.686	inches	Calculated by dividing the sum of the moments (B46) by the Combined weight (B45)				
51	Horizontal Distance for c.g. of Table, PVC Block and Pallet	19.128	inches	Calculated by dividing the sum of the moments (B47) by the Combined weight (B45)				
52								
53	**Section 4; Geometry of the Hydraulic Pivot Cylinders**							
54	**Cylinder, Pivot, and Anchor Locations:**							
55	Horizontal distance (when table is horz) from pivot to cylinder connection	208.000	inches	labled as distance "x" on sketch 1				
56	Vertical distance (when table is horz) from pivot to cylinder connection	60.000	inches	labled as distance "y" on sketch 1				
57	Horizontal distance from pivot to cylinder stationary connection	135.000	inches	labled as distance "u" on sketch 1				
58	Vertical distance from pivot to cylinder stationary connection	228.000	inches	labled as distance "v" on sketch 1				208
59								
60								
61	**Cylinder Distances when table Horizontal:**							
62	horizontal length	343.000	inches	Sum of Horizontal distances (B55) + (B57)				
63	vertical length	168.000	inches	Change in Vertical disances (B58) - (B56)				
64	Overall length	381.933	inches	square of the sum of the squares of (B62) and (B63)				
65	Angle of Cylinder above horizontal	0.4555	radians	calculated using the inverse tangent of (B63) over (B62)				
66	Angle of Cylinder above horizontal	26.10	degrees	(B65) converted to degrees				
67								
68	**Cylinder Loads with Table Horizontal (both cylinders share these loads) :**							
69	Moment to counter	12,500,932	in-lbs	Moment is due to Block + Pallet + Table and is equal to the value calculated in (B47)				
70	Lever arm pivot to cylinder connection	208	in	Value from (B55)				
71	Vertical Component of Cylinder Force	60,101	lbs	(B69) divided by (B70)				
72	Horizontal Component of Cylinder Force	122,705	lbs	Square root of the sum of the squared = sqrt((B73)^2 - (B71)^2)				
73	Axial component of cylinder force	136,634	lbs	Calculated by (B71)/sin(B65)				
74								
75	**Cylinder Loads with Table Vertical (both cylinders share these loads):**							
76	Moment to counter	20,708,155	in-lbs	Moment is due to Block + Pallet + Table and is equal to the value in cell (B46)				
77	Lever arm pivot to cylinder connection	228	in	Value from (B58)				
78	Horizontal Component of Cylinder Force	90,825	lbs	Calculated by (B76)/ (B77); Cylinder axis is horzontal at this condition				
79								
80	**Cylinder Loads with Table Vertical (both cylinders share these loads):**							
81	Moment to counter	(1,060,800)	in-lbs	Moment is due to Table and equals the value in cell (B35)				
82	Lever arm pivot to cylinder connection	228	in	Value from (B58)				
83	Horizontal Component of Cylinder Force	(4,653)	lbs	Calculated by (B81)/ (B82); Cylinder axis is near horzontal at this condition				
84								
85								

Section 5; Geometry Calculations of the Hydraulic Cylinder Ends:

Length "a"	264.970	inches	this is the distance from the pivot to the stationary pin for the cylinder; calculated using the
Length "b"	216.480946	inches	this is the distance from the pivot to the table mounted (moving) pin for the cylinder; calculated
Length "c" (initial - when table is horizontal)	381.9332402	inches	this is the length of the cylinder when extended to put the table surface horizontal cylinder open length;
length "c" (final when table is vertical)	77.621	inches	this is the length of the cylinder when the table is vertical, cylinder closed length; calculated using the
Angle 'phi' φ (constant)	16.09081635	degrees	angle below horizontal from table pivot to the table mounted (moving) pin for the cylinder; calculated
Angel 'alpha closed', α	106.091	degrees	angle alpha when the table is vertical; calculated using complementary angle with angle phi, φ
Angle 'Theta closed' θ	14.53918214	degrees	angle theta when the table is vertical; calculated using the law of cosines
Angle 'Theta open'	104.5391821	degrees	angle from table cylinder pivot, vertex at pivot, to cylinder stationary connection when the table is horizontal; calculated by adding 90 degrees (table
Angle 'alpha open' α	42.186	degrees	angle alpha when the table is horizontal; calculated using the law of cosines
Angle 'Beta open' β	33.275	degrees	angle from cylinder moving pivot, vertiex at cyl stational pivot, to table pivot wne the table is
Cylinder Stroke (change of length c)	304	inches	Actual cylinders specified with a 312 inch stroke - See Phelps Industries Dwg 10114-C

SKETCH 1 4-17-09 DAVE PUSHKA

GEOMETRY WHEN TABLE IS HORIZONTAL:

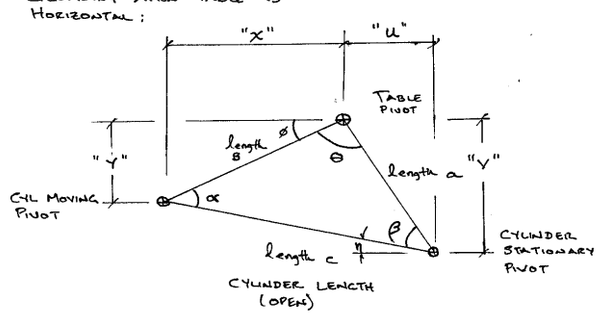

angle η IS THE ANGLE OF THE CYLINDER ABOVE HORIZONTAL.

GEOMETRY WHEN TABLE IS VERTICAL:

length a IS CONSTANT

length B IS CONSTANT

$\alpha_{CLOSED} = 90 + \phi$

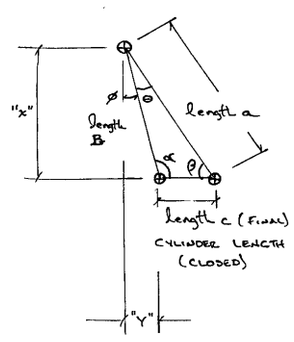

SKETCH 3 4-21-09 DAVE PUSHKA

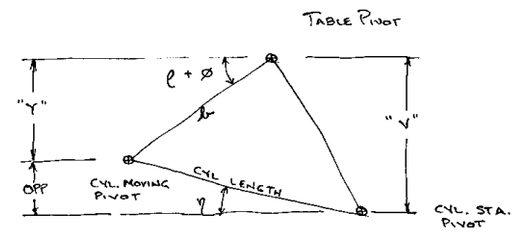

CYLINDER ANGLE, η =

$$\sin \eta = \frac{OPP}{HYP} = \frac{OPP}{\text{CYLINDER LENGTH}}$$

OPP = LENGTH "V" − LENGTH "Y"

∠ø = CONSTANT

∠ρ = TABLE ROTATION

LENGTH "Y" = $b \sin(\phi + \rho)$

OPP = "V" − $b \sin(\phi + \rho)$

$$\sin \eta = \frac{V - b \sin(\phi + \rho)}{\text{CYL. LENGTH}}$$

$$\therefore \eta = \arcsin\left(\frac{V - b \sin(\phi + \rho)}{\text{CYL. LENGTH}}\right)$$

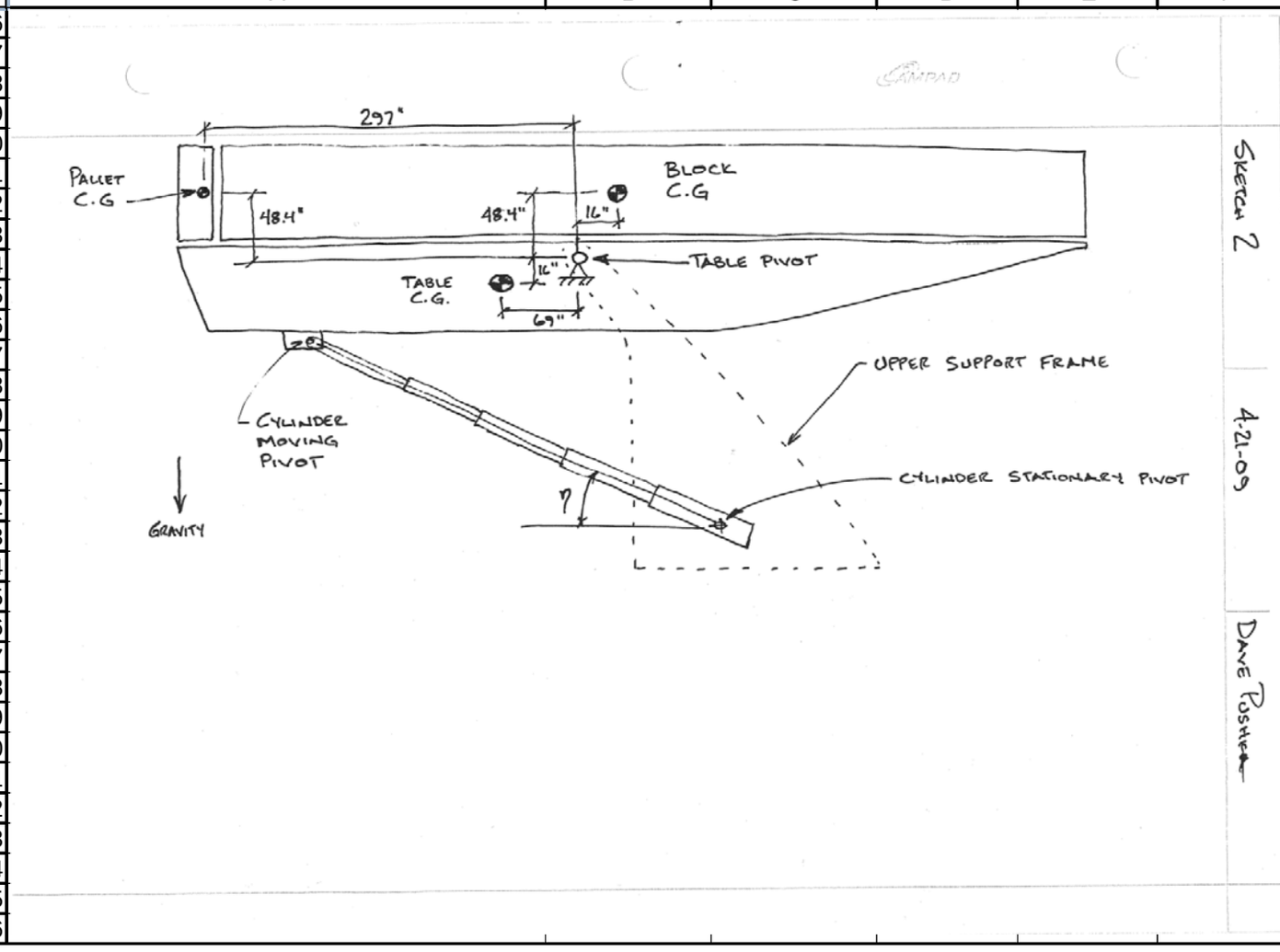
297"
PALLET C.G
48.4"
48.4"
16"
BLOCK C.G
16"
TABLE PIVOT
TABLE C.G.
69"
UPPER SUPPORT FRAME
CYLINDER MOVING PIVOT
CYLINDER STATIONARY PIVOT
η
GRAVITY
SKETCH 2
4-21-09
DAVE PUSHKA

	A	B	C	D	E	F	G	H
167	**Section 6; Same calculations as in Section 5 repeated for many table rotation angles**							
168	**TABLE 1, Geometry of the Cylinder about the Table Pivot Pin as a function of Table Rotation Angle**							
169								
170								
171								
172	Table angle relative to horizontal, rho ρ, in degrees	Angle Theta, θ	Cylinder Length	Angle Alpha, α	Angle Beta, β	Cylinder Angle above horizontal, η,	Number of cylinder Stages extended	
173		degrees	inches	degree	degree	degree		
174	2	106.539	386.95	41.028	32.433	26.94	4.00	
175	0	104.539	381.93	42.186	33.275	26.10	3.94	
176	-5	99.539	368.90	45.100	35.360	24.01	3.77	
177	-10	94.539	355.18	48.046	37.415	21.95	3.59	
178	-15	89.539	340.81	51.028	39.433	19.94	3.41	
179	-20	84.539	325.82	54.053	41.408	17.96	3.22	
180	-25	79.539	310.23	57.130	43.331	16.04	3.02	
181	-30	74.539	294.09	60.270	45.191	14.18	2.81	
182	-35	69.539	277.43	63.485	46.976	12.39	2.60	
183	-40	64.539	260.30	66.793	48.668	10.70	2.38	
184	-45	59.539	242.72	70.216	50.245	9.13	2.15	
185	-50	54.539	224.76	73.786	51.675	7.70	1.92	
186	-55	49.539	206.46	77.543	52.918	6.45	1.69	
187	-60	44.539	187.89	81.547	53.913	5.46	1.45	
188	-65	39.539	169.12	85.884	54.577	4.79	1.21	
189	-70	34.539	150.24	90.681	54.780	4.59	0.96	
190	-75	29.539	131.39	96.138	54.323	5.05	0.72	
191	-80	24.539	112.75	102.579	52.882	6.49	0.48	
192	-85	19.539	94.64	110.555	49.906	9.46	0.25	
193	-90	14.539	77.62	121.022	44.439	14.93	0.03	
194	-86	18.539	91.13	112.408	49.053	10.32	0.21	
195	-87	17.539	87.66	114.370	48.091	11.28	0.16	
196	-88	16.539	84.25	116.450	47.011	12.36	0.12	
197	-89	15.539	80.90	118.663	45.798	13.57	0.08	
198								
199	Angle Theta, θ for the initial condition of 0 degrees rotation comes from the value calculated in cell (B90), subsequent values are calculated by adding							
200	Cylinder Length is calculated using the law of cosines (same as above for cell B85) but using the current value of angle theta θ in column B							
201	Angle Alpha, α is calculated using the law of cosines (same as above for cell B89) but using the current value of cylinder length in column C							
202	Angle Beta, β is calculated by subtraction angle Alpha, α and angle Theta, θ from 180 degrees							
203	Cylinder Angle above horizontal, η, = arcsin((v-b*(sin(φ + η))) / cylinder length)							
204	Table Moments are calculated by weight (in cell G97) * ((cell (B32)*cos (η) + cell (B31)* sin (η))							
205	Block Moments are calculated by weight (in cell H97) * ((cell (B25)*cos (η) + cell (B24)* sin (η))							
206	Pallet Moments are calculated by weight (in cell I97) * ((cell (B17)*cos (η) + cell (B16)* sin (η))							
207	Sum of Moments from Table + Pallet is the sum of value in column G + value in column H							
208	Sum of Moments from Table + Pallet + Block is the sum of value in column G + value in column H + value in column I							

	A	B	C	D	E	F	G	H
209	**TABLE 2, Moments about the Table Pivot Pin as a function of Table Rotation Angle**							
210								
211	Weights calculated above used in calculating the	Table Wt	Pallet Wt	Block Wt				
212		204,000	27,072	422,466				
213	Table angle relative to horizontal, rho ρ, in degrees	Table Moment	Pallet Moment	Block Moment	Sum of Moments from Table + Pallet	Sum of Moments from Table+Pallet +Block		
214		in-lbs	in-lbs	in-lbs	in-lbs	in-lbs		
215	2	11,250,186	7,989,734	(7,469,308)	19,239,920	11,770,612		
216	0	11,220,000	8,040,384	(6,759,452)	19,260,384	12,500,932		
217	-5	11,084,850	8,124,046	(4,950,700)	19,208,896	14,258,196		
218	-10	10,865,337	8,145,880	(3,104,269)	19,011,217	15,906,948		
219	-15	10,563,133	8,105,718	(1,234,213)	18,668,850	17,434,638		
220	-20	10,180,536	8,003,867	645,237	18,184,403	18,829,639		
221	-25	9,720,460	7,841,101	2,519,775	17,561,561	20,081,336		
222	-30	9,186,405	7,618,660	4,375,137	16,805,065	21,180,202		
223	-35	8,582,436	7,338,237	6,197,201	15,920,673	22,117,874		
224	-40	7,913,150	7,001,965	7,972,101	14,915,114	22,887,215		
225	-45	7,183,639	6,612,404	9,686,328	13,796,043	23,482,371		
226	-50	6,399,457	6,172,518	11,326,836	12,571,975	23,898,811		
227	-55	5,566,571	5,685,656	12,881,140	11,252,227	24,133,368		
228	-60	4,691,320	5,155,523	14,337,411	9,846,843	24,184,254		
229	-65	3,780,366	4,586,153	15,684,566	8,366,518	24,051,084		
230	-70	2,840,640	3,981,879	16,912,352	6,822,519	23,734,871		
231	-75	1,879,296	3,347,301	18,011,424	5,226,597	23,238,021		
232	-80	903,648	2,687,248	18,973,419	3,590,897	22,564,316		
233	-85	(78,876)	2,006,744	19,791,015	1,927,868	21,718,883		
234	-90	(1,060,800)	1,310,967	20,457,988	250,167	20,708,155		
235	-86	(275,548)	1,868,642	19,936,638	1,593,094	21,529,732		
236	-87	(472,137)	1,729,971	20,076,189	1,257,835	21,334,024		
237	-88	(668,581)	1,590,774	20,209,624	922,192	21,131,817		
238	-89	(864,822)	1,451,091	20,336,904	586,269	20,923,173		
239								
240	rotation comes from the value calculated in cell (B90), subsequent values are calculated by adding							
241	Cylinder Length is calculated using the law of cosines (same as above for cell B85) but using the current value of angle theta θ in column B							
242	Angle Alpha, α is calculated using the law of cosines (same as above for cell B89) but using the current value of cylinder length in column C							
243	Angle Beta, β is calculated by subtraction angle Alpha, α and angle Theta, θ from 180 degrees							
244	Cylinder Angle above horizontal, η, = arcsin((v-b*(sin(φ + η))) / cylinder length)							
245	Table Moments are calculated by weight (in cell G97) * ((cell (B32)*cos (η) + cell (B31)* sin (η))							
246	Block Moments are calculated by weight (in cell H97) * ((cell (B25)*cos (η) + cell (B24)* sin (η))							
247	Pallet Moments are calculated by weight (in cell I97) * ((cell (B17)*cos (η) + cell (B16)* sin (η))							
248	Sum of Moments from Table + Pallet is the sum of value in column G + value in column H							
249	Sum of Moments from Table + Pallet + Block is the sum of value in column G + value in column H + value in column I							
250								

SKETCH #4 4-21-09 DAVE PUSHKA

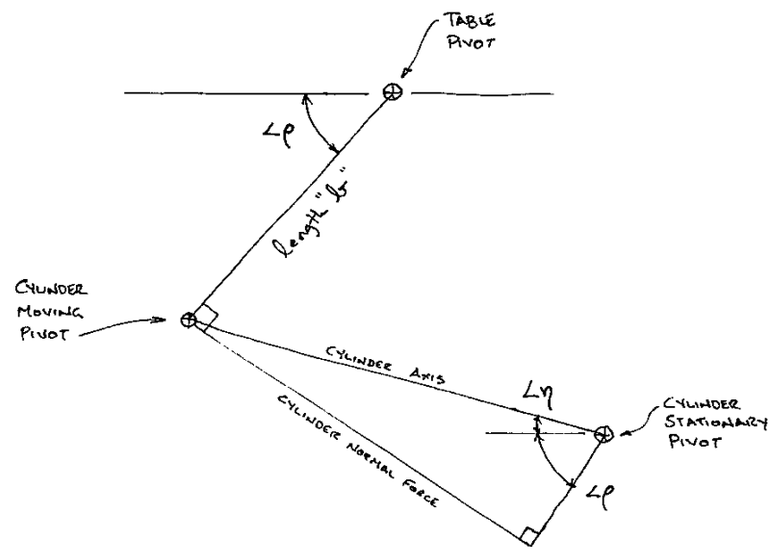

$$\Sigma M_{\text{TABLE PIVOT}} = 0 = M_{\text{TABLE}} + M_{\text{PALLET}} + M_{\text{BLOCK}} - \text{"}b\text{"} \times (\text{CYL. NORMAL FORCE})$$

$$\therefore \text{ CYLINDER NORMAL FORCE} = \frac{M_T + M_P + M_B}{\text{"}b\text{"}}$$

$$\text{CYLINDER AXIAL FORCE} = \frac{\text{CYLINDER NORMAL FORCE}}{\sin(\eta + \rho)}$$

SKETCH 5 5-6-09 DAVE

CALCULATIONS FOR MOMENT GENERATED TABLE ABOUT TABLE PIVOT.

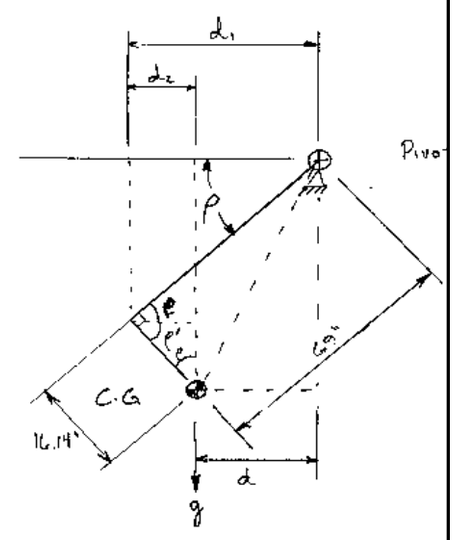

$$\text{MOMENT} = mg \times d$$

$$d = d_1 - d_2$$

$$d_1 = 69 \cos\rho$$

$$d_2 = 16.14 \sin\rho$$

$$\cancel{d = (69 - 16.14)\cos\rho}$$

$$d = 69\cos\rho - 16.1\sin\rho$$

$$\therefore M = (mg)(69\cos\rho - 16.1\sin\rho)$$

	A	B	C	D	E	F	G	H
293	**TABLE 3: Cylinder Loads as a function of Rotation Angle, Combined values are for both sides, individual values (shown below in table 4) are for one cylinder.**							
294	Table angle relative to horizontal, rho ρ, in degrees	combined cylinder normal load to counter act moment for T+P+B	combined Cylinder axial load, to counter act moment for T+P+B	combined Cylinder normal load, to counter act moment for T+P	combined Cylinder axial load, to counter act moment for T+P	combined Cylinder normal load, to counter act moment for Table only	combined Cylinder axial load, to counter act moment for Table only	
295		pounds	kips	kips	kips	kips	kips	
296	2	54,373	128.96	88,876	210.8	51,968	123	
297	0	57,746	131.28	88,970	202.3	51,829	118	
298	-5	65,864	135.81	88,733	183.0	51,205	106	
299	-10	73,480	138.84	87,819	165.9	50,191	95	
300	-15	80,537	140.63	86,238	150.6	48,795	85	
301	-20	86,981	141.40	84,000	136.6	47,027	76	
302	-25	92,763	141.28	81,123	123.6	44,902	68	
303	-30	97,839	140.39	77,628	111.4	42,435	61	
304	-35	102,170	138.81	73,543	99.9	39,645	54	
305	-40	105,724	136.62	68,898	89.0	36,554	47	
306	-45	108,473	133.87	63,729	78.6	33,184	41	
307	-50	110,397	130.61	58,074	68.7	29,561	35	
308	-55	111,480	126.91	51,978	59.2	25,714	29	
309	-60	111,715	122.81	45,486	50.0	21,671	24	
310	-65	111,100	118.39	38,648	41.2	17,463	19	
311	-70	109,640	113.73	31,516	32.7	13,122	14	
312	-75	107,344	108.98	24,143	24.5	8,681	9	
313	-80	104,232	104.43	16,588	16.6	4,174	4	
314	-85	100,327	100.63	8,905	8.9	(364)	(0)	
315	-90	95,658	99.00	1,156	1.2	(4,900)	(5)	
316	-86	99,453	100.06	7,359	7.4	(1,273)	(1)	
317	-87	98,549	99.59	5,810	5.9	(2,181)	(2)	
318	-88	97,615	99.23	4,260	4.3	(3,088)	(3)	
319	-89	96,651	99.03	2,708	2.8	(3,995)	(4)	
320								
321								
322	combined cylinder normal load to counter act moments for T + P + B is the moment from column K in the table above * the cylinder to pivot lever arm (length b) from cell B84							
323								
324	combined cylinder axial load, to counter act moment for T + P + B is calculated by dividing the value in cell B by the sin (η) and by 1000 to convert unit to kips							
325								
326	combined cylinder normal load to counter act moments for T + P is the moment from column J in the table above * the cylinder to pivot lever arm (length b) from cell B84							
327	combined cylinder axial load, to counter act moment for T + P is calculated by dividing the value in cell B by the sin (η) and by 1000 to convert unit to kips							
328								
329	combined cylinder normal load to counter act moments for Table only is the moment from column G in the table above * the cylinder to pivot lever arm (length b) from cell B84							
330								
331	combined cylinder axial load, to counter act moment for Table only is calculated by dividing the value in cell B by the sin (η) and by 1000 to convert unit to kips							
332								

	A	B	C	D	E	F	G	H
333	**TABLE 4: Cylinder Loads as a function of Rotation Angle, Combined values (shown above in Table 3) are for both sides, individual values are for one cylinder.**							
334								
335								
336	Table angle relative to horizontal, rho ρ, in degrees	individual cylinder load, to counter act moment for T+P+B	individual cylinder load, to counter act moment for T+P	individual cylinder load, to counter act moment for Table only	individual cylinder load, to counter act moment for T+P	individual cylinder load, to counter act moment for Table only	Cylinder Length, feet	Number of Stages Extended
337		kips	kips	kips	kips	kips	feet	
338	2	64.5	105	62	105.4	61.6	32.2	4.00
339	0	65.6	101	59	101.1	58.9	31.8	3.94
340	-5	67.9	91	53	91.5	52.8	30.7	3.77
341	-10	69.4	83	47	83.0	47.4	29.6	3.59
342	-15	70.3	75	43	75.3	42.6	28.4	3.41
343	-20	70.7	68	38	68.3	38.2	27.2	3.22
344	-25	70.6	62	34	61.8	34.2	25.9	3.02
345	-30	70.2	56	30	55.7	30.4	24.5	2.81
346	-35	69.4	50	27	50.0	26.9	23.1	2.60
347	-40	68.3	45	24	44.5	23.6	21.7	2.38
348	-45	66.9	39	20	39.3	20.5	20.2	2.15
349	-50	65.3	34	17	34.4	17.5	18.7	1.92
350	-55	63.5	30	15	29.6	14.6	17.2	1.69
351	-60	61.4	25	12	25.0	11.9	15.7	1.45
352	-65	59.2	21	9	20.6	9.3	14.1	1.21
353	-70	56.9	16	7	16.3	6.8	12.5	0.96
354	-75	54.5	12	4	12.3	4.4	10.9	0.72
355	-80	52.2	8	2	8.3	2.1	9.4	0.48
356	-85	50.3	4	(0)	4.5	-0.2	7.9	0.25
357	-90	49.5	1	(3)	0.6	-2.5	6.5	0.03
358	-86	50.0	4	(1)	3.7	-0.6	7.6	0.21
359	-87	49.8	3	(1)	2.9	-1.1	7.3	0.16
360	-88	49.6	2	(2)	2.2	-1.6	7.0	0.12
361	-89	49.5	1	(2)	1.4	-2.0	6.7	0.08
362								
363								
364	individual cylinder load to counter act moment for T + P + B assume two cylinders equally share the load so this is the value of cell C divided by 2							
365	individual cylinder load to counter act moment for T + P assume two cylinders equally share the load so this is the value of cell C divided by 2							
366	individual cylinder load to counter act moment for Table assume two cylinders equally share the load so this is the value of cell C divided by 2							
367	Cylinder Length in feet is calculated by dividing the value in cell C in the above table (the cylinder length) by 12 to convert from inches to feet.							
368								
369								

Graph 1; Individual Cylinder Load as a function of Table rotation Angle

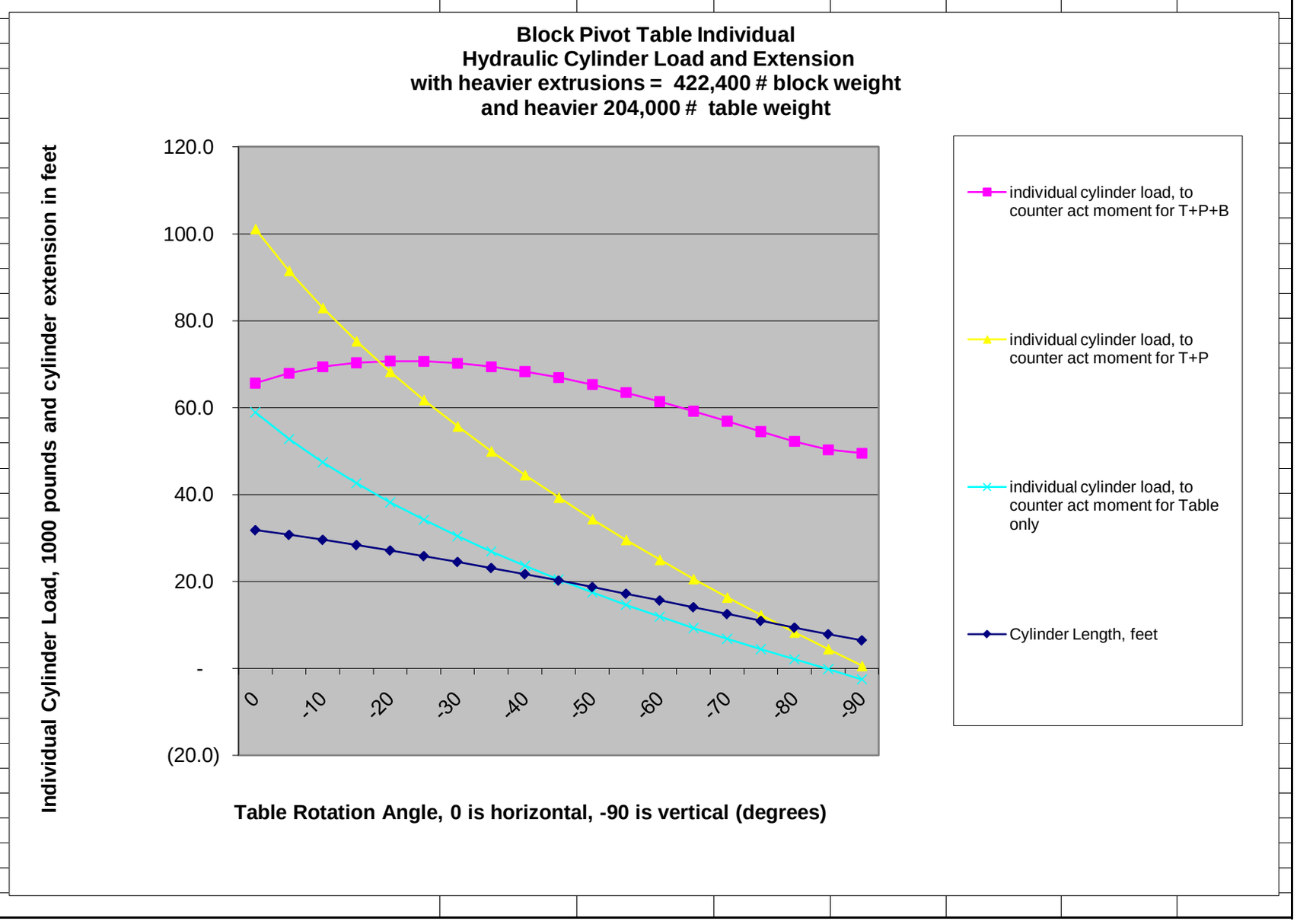

	A	B	C	D	E	F	G	H
408								
409	**Section 7; Hydraulic Cylinder Dimensions and Load Capability**							
410								
411	**Phelps Pivot Cylinder Diameters:**							
412	Barrel inner diameter	14.125	inches					
413	1st moving stage o.d	13.25	inches					
414	2nd moving stage o.d.	11.5	inches					
415	3rd moving stage o.d.	10	inches					
416	Final moving stage o.d.	8.375	inches					
417								
418	**Phelps Pivot Cylinder Areas:**							
419	Barrel	156.7	square inches					
420	1st moving stage	137.9	square inches					
421	2nd moving stage	103.9	square inches					
422	3rd moving stage	78.5	square inches					
423	Final moving stage	55.1	square inches					
424								
425	**Maximum Cylinder Pressure**	1800	psi					
426	**Maximum Cylinder Force for each stage**							
427	Barrel	282,059	pounds					
428	1st moving stage	248,196	pounds					
429	2nd moving stage	186,964	pounds					
430	3rd moving stage	141,372	pounds					
431	Final moving stage	99,159	pounds					
432								
433	Cylinder Closed Length	75	inches					
434	Length per Stage	78	inches					
435								
436								
437								
438								
439								
440								

	A	B	C	D	E	F	G	H
441								
442	**Section 8; Geometry of the Upper Frame Weldment:**							
443	Horizontal distances on the Upper Frame:							
444	Rearward Pin to table Pivot	240	inches					
445	Rearward Pin to Forward Pin	174	inches					
446	Rearward Pin to Cylinder Stationary Pin	105	inches					
447								
448	Vertical distances on the Upper Frame:							
449	Rearward Pin to table Pivot	240	inches	see dwg 3929.000-ME-486961				
450	Rearward Pin to Forward Pin	0	inches					
451	Rearward Pin to Cylinder Stationary Pin	32	inches					
452								
453	Weight of Upper Frame_4	36,274	pounds					
454	c.g. Location rearward pin center line, horizontal	137.2359	inches	measured from solid model of Upper_Frame_4				
455	c.g. Location rearward pin center line, vertical	100.6872	inches	measured from solid model of Upper_Frame_4				
456	Load on Rearward Pin due to Upper_Frame_4	7,664	pounds	calculated by summing the moments about the forward pin				
457	Load on Forward Pin due to Upper_Frame_4	28,610	pounds	calculated by summing the forces in the vertical direction				
458								
459								
460								
461								
462								
463								
464								
465								
466								
467								
468								
469								
470								
471								
472								
473								
474								
475								
476								
477								
478								
479								
480								
481								
482								
483								
484								
485								

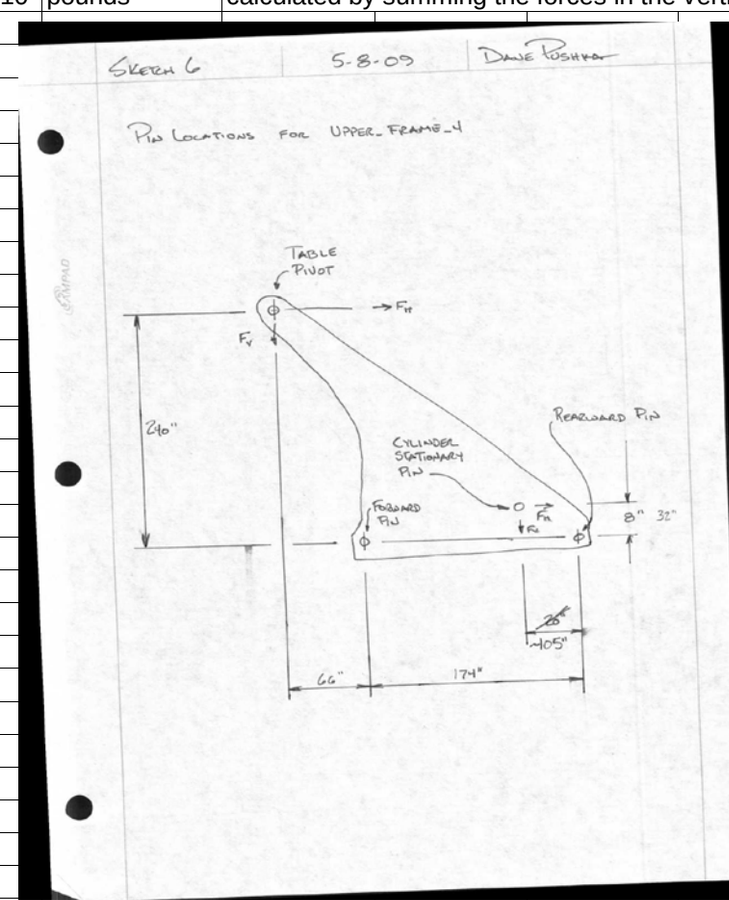

	A	B	C	D	E	F	G	H
486	**TABLE 5, Maximum Reaction on Table Pivot, Cylinder Ends, assumes two cylinders sharing the total load and load from Table + Pallet + Block (T + P + B):**							
487	Table angle relative to horizontal, rho ρ, in degrees	Horizontal Load on stationary cylinder pivot, pounds	Vertical Load on stationary cylinder pivot, pounds	Horizontal Load on table pivot, pounds	Vertical Load on table pivot, pounds	Vertical Load on Upper Frame Forward Pin, pounds	Vertical Load on Upper Frame Rear Pin, pounds	Vertical Load on Upper Frame Rear Pin, tons
488								
489	0	58,949	(28,873)	(58,949)	(297,896)	527,392	(192,959)	(96.48)
490	-5	62,031	(27,631)	(62,031)	(299,138)	532,040	(197,607)	(98.80)
491	-10	64,384	(25,954)	(64,384)	(300,815)	536,154	(201,721)	(100.86)
492	-15	66,102	(23,977)	(66,102)	(302,792)	539,742	(205,308)	(102.65)
493	-20	67,254	(21,803)	(67,254)	(304,966)	542,804	(208,371)	(104.19)
494	-25	67,891	(19,518)	(67,891)	(307,251)	545,339	(210,906)	(105.45)
495	-30	68,057	(17,194)	(68,057)	(309,574)	547,340	(212,907)	(106.45)
496	-35	67,789	(14,897)	(67,789)	(311,872)	548,802	(214,369)	(107.18)
497	-40	67,121	(12,685)	(67,121)	(314,084)	549,720	(215,287)	(107.64)
498	-45	66,087	(10,616)	(66,087)	(316,153)	550,089	(215,656)	(107.83)
499	-50	64,719	(8,745)	(64,719)	(318,024)	549,906	(215,473)	(107.74)
500	-55	63,053	(7,131)	(63,053)	(319,638)	549,167	(214,733)	(107.37)
501	-60	61,128	(5,839)	(61,128)	(320,930)	547,867	(213,434)	(106.72)
502	-65	58,986	(4,946)	(58,986)	(321,823)	546,001	(211,567)	(105.78)
503	-70	56,682	(4,550)	(56,682)	(322,218)	543,552	(209,119)	(104.56)
504	-75	54,281	(4,794)	(54,281)	(321,975)	540,494	(206,061)	(103.03)
505	-80	51,880	(5,900)	(51,880)	(320,869)	536,765	(202,332)	(101.17)
506	-85	49,631	(8,273)	(49,631)	(318,496)	532,236	(197,803)	(98.90)
507	-90	47,829	(12,754)	(47,829)	(314,014)	526,605	(192,172)	(96.09)
508								
509	Horizontal Load on Stationary Cylinder Pivot is calculated by multiplying the cylinder axial load (cells in column B in above table 4) by the COSINE of cylinder angle η in column F Table 1 above							
510	Vertical Load on Stationary Cylinder Pivot is calculated by multiplying the cylinder axial load (cells in column B in above table 4) by the SIN of cylinder angle η in column F Table 1 above							
511	Horizontal Load on the table pivot is calculated by suming the forces in the horizontal direction and setting equal to zero, then solving for this value							
512	Vertical Load on the table pivot is calculated by suming the forces in the vertical direction (including table, pallet and block weights) and setting equal to zero, then solving for this value							
513	Forward Pin Vertical Load is calculated by summing the moments about the rear pin.							
514	Rear Pin Vertical Load is calculated by summing the forces in the vertical direction. A negative value represents a pin load restraining uplift.							

	A	B	C	D	E	F	G	H
515								
516	**TABLE 6, Cylinder Pressure, assumes two cylinders sharing the total load and load from Table + Pallet + Block (T + P + B):**							
517								
518	Table angle relative to horizontal, rho ρ, in degrees	Number of cylinder Stages extended	individual cylinder load, to counter act moment for T+P+B	Area of smallest stage	Pivot Cylinder System Pressure for T + P + B	individual cylinder load, to counter act moment for T+P	Pivot Cylinder System Pressure for T + P	
519			kips	sq. inches	psi	kips		
520	2	4.00	64.5	55.09	1170	105.4	1913	
521	0	3.94	65.6	55.09	1192	101.1	1836	
522	-5	3.77	67.9	55.09	1233	91.5	1661	
523	-10	3.59	69.4	55.09	1260	83.0	1506	
524	-15	3.41	70.3	55.09	1276	75.3	1367	
525	-20	3.22	70.7	55.09	1283	68.3	1239	
526	-25	3.02	70.6	55.09	1282	61.8	1121	
527	-30	2.81	70.2	78.54	894	55.7	709	
528	-35	2.60	69.4	78.54	884	50.0	636	
529	-40	2.38	68.3	78.54	870	44.5	567	
530	-45	2.15	66.9	78.54	852	39.3	501	
531	-50	1.92	65.3	103.87	629	34.4	331	
532	-55	1.69	63.5	103.87	611	29.6	285	
533	-60	1.45	61.4	103.87	591	25.0	241	
534	-65	1.21	59.2	103.87	570	20.6	198	
535	-70	0.96	56.9	137.89	412	16.3	119	
536	-75	0.72	54.5	137.89	395	12.3	89	
537	-80	0.48	52.2	137.89	379	8.3	60	
538	-85	0.25	50.3	137.89	365	4.5	32	
539	-90	0.03	49.5	137.89	359	0.6	4	
540								
541								
542								

	A	B	C	D	E	F	G	H
543								
544	**Section 9); LOWER FRAME TO UPPER FRAME REAR PIN GEOMETRY to BLOCK, TABLE AND Pallet Center of Gravities**							
545								
546	Horizontal Dimensions:							
547	Distance from Upper Frame Rear pin to Front Pin	174	inches					
548	Distance from Upper Frame Rear pin to Upper Frame C.G	137.2359	inches					
549	Distance from Upper Frame Rear pin to Table C.G.	295.000	inches					
550	Distance from Upper Frame Rear pin to Pallet C.G.	537.000	inches					
551	Distance from Upper Frame Rear pin to Block C.G.	224.000	inches					
552								
553	Vertical Dimensions:							
554	Distance from Upper Frame Rear pin to Front Pin	0	inches					
555	Distance from Upper Frame Rear pin to Upper frame C.G	100.6872	inches					
556	Distance from Upper Frame Rear pin to Table C.G.	234.800	inches					
557	Distance from Upper Frame Rear pin to Pallet C.G.	288.425	inches					
558	Distance from Upper Frame Rear pin to Block C.G.	288.425	inches					
559								
560	Weight of Upper Frame	36,274	pounds					
561	Weight of Table	204,000	pounds					
562	Weight of Pallet	27,072	pounds					
563	Weight of Block	422,466	pounds					
564								
565								

	A	B	C	D	E	F	G	H
566								
567	**Section 10; LOADS on PINS ATTACHED to the UPPER FRAME (Table Pivot Pin, Rear Pin, Forward Pin):**							
568								
569	Moments about rear pin due to:							
570	Upper Frame	4,978,095	in-lbs	Moment = horizontal distance from pin to c.g. * the Upper Frame weight				
571	Table	60,180,000	in-lbs	Moment = horizontal distance from pin to c.g. * the Table weight				
572	Pallet	14,537,664	in-lbs	Moment = horizontal distance from pin to c.g. * the Pallet weight				
573	Block	94,632,334	in-lbs	Moment = horizontal distance from pin to c.g. * the Block weight				
574								
575	Reaction on Upper Frame Forward Pin:	1,001,886	pounds	Calculated by summing the above moments about the rear pin and dividing by the rear pin to fromnt pin horizontal distance				
576	Reaction on Upper Frame Forward Pin:	500.94	tons	divides cell above by 2000 to convert to tons				
577	Load on each Kneeling Cylinder Jack (4)	250,471	pounds	divides forward pin reaction by 4 jacks to show the load per jack				
578								
579	Maximum Load on the Table Pivot Pin, pounds	653,538	pounds					
580	Number of Table Pivot Shear planes	4						
581	Table Pivot Pin Diameter, inches	4	inches					
582	**Table Pivot Pin shear stress, psi**	**13,002**	**psi**					
583								
584	Maximum Load on the Upper Frame Forward Pin, pounds	550,089	pounds					
585	Number of Upper Frame Forward Pin Shear planes	8						
586	Upper Frame Forward Pin Diameter, inches	4	inches					
587	**Upper Frame Forward Pin shear stress, psi**	**5,472**	**psi**					
588								
589	Maximum Load on the Upper Frame Rearward Pin, pounds	215,656	pounds					
590	Number of Upper Frame Rearward Pin Shear planes	8						
591	Upper Frame Rearward Pin Diameter, inches	4	inches					
592	**Upper Frame Rearward Pin shear stress, psi**	**2,145**	**psi**					
593								
594	Pin Material (applicable to all three pins; table pivot, rear and forward)	ANSI 4140, Quenched, Drawn , Ground and Polished						
595	Yield Stress	131,000	psi					
596	Ultimate Stress	153,000	psi					
597	Allowable Shear Stress	52,400	psi					
598								
599								
600								
601	**Rear Pin Gusset Shear and Tension Stress:**							
602	Number of Rear Pin Gusset Planes	12						
603	Rear Pin Gusset thickness	1	inches					
604	Rear Pin Gusset Width:	12	inches					
605	Upper Frame Rearward Pin Diameter, inches	4	inches					
606	Rear Pin Gusset Tension Area	96	square inches					
607	Rear Pin Gusset Tension Stress	2,246	psi					
608	Rear Pin Gusset distance from edge of gusset to edge of hole	2	inches					
609	Rear Pin Gusset Shear Area	48	square inches					
610	Rear Pin Gusset Shear Stress	4,493	psi					
611								
612								

	A	B	C	D	E	F	G	H
613								
614	**Section 11; LOWER FRAME Beam Loading**							
615	**Maximum Loads on Lower Frame and Resulting Bending Moments:**							
616								
617	Load at the forward upper frame pin	550,089	pounds	275.04	tons			
618	Load at the rearward upper frame pin	(215,656)	pounds	positive value indicates a load in the downward direction				
619	Distance between upper frame connection points	174	inches	negative value indicated an up-lift … force in the upward direction				
620	Distance from point "A" to Forward Pin	152	inches					
621	Lower Frame dimension "a", inches	0						
622	Lower Frame dimension "b", inches	150	inches					
623	Lower Frame dimension "c", inches	160	inches					
624	Lower Frame dimension "d", inches	350	inches					
625	Load due to counter weight at the R4 position	171,000	pounds					
626	Percent of total load taken by R3	14		Choose a value sufficient to give sufficient drive wheel friction to ov hillman roller friction				
627	Reaction R4	-	pounds			Set equal to zero		
628	Reaction R3	46,821	pounds	23.41	tons			
629	Reaction R2	38,789	pounds	19.39	tons	Calculated by summing the moments about "A"		
630	Reaction R1	248,823	pounds	124.41	tons	Calculated by summing the forces in the vertical direction.		
631		668,866						
632	Shear R1 to R2	248,823	pounds					
633	Shear R2 o Pfp	287,613	pounds					
634	Shear Pfp to R3	(262,477)	pounds					
635	Shear R3 to Prp	(215,656)	pounds					
636								
637	Moment at R1	0	in-lbs					
638	Moment at R2	37,323,515	in-lbs					
639	Moment at Pfp	37,898,740	in-lbs					
640	Moment at R3	35,798,925	in-lbs					
641	Moment at Prp	0	in-lbs					
642								
643	Allowable Stress for the Lower frame based on AISC 9th edition requirements (0.6Fy) and a material with a 36 ksi yield stress	21,600	psi					
644	Desired Stress for Lower Frame	10,000	psi					
645	Required Moment of Inertia R1 to R2	3,732	in^4					
646	Required Moment of Inertia R2 to Pfp	3,790	in^4					
647	Required Moment of Inertia Pfp to R3	3,790	in^4					
648	Required Moment of Inertia R3 to Prp	3,580	in^4					

SKETCH 7
LOWER FRAME F.B.D. 5-13-09 DAVE PUSHKA

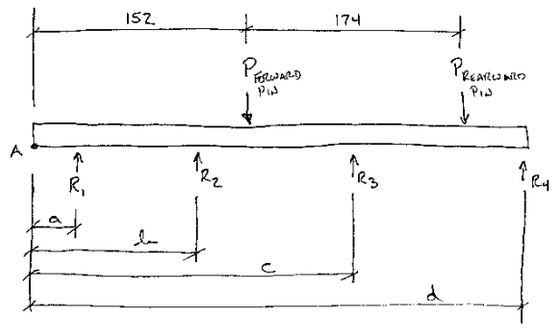

$$\Sigma F_v = 0 = R_1 + R_2 + R_3 + R_4 - P_{FP} - P_{RP}$$

$$\therefore R_1 = P_{FP} + P_{RP} - R_2 - R_3 - R_4$$

$$\Sigma M_A = 0 = (R_1)a + (R_2)b + (R_3)c + (R_4)d - (P_{FP})(152) - P_{RP}(152+174)$$

let dimension "a" equal zero

assume Reaction 4 equals zero

assume Reaction 3 (drive wheel) is 20% of total load

Solve for R_2:

$$R_2 = \frac{-R_1\cancel{a} - R_3c - \cancel{R_4d} + 152(P_{FP}) + (152+174)R_{RP}}{b}$$

	A	B	C	D	E	F	G	H
681								
682	**Section 12a ; Moment of Inertia of the Front Portion of the Lower Weldment (the area between R1 and R2) Calculated by hand**							
683	Top Plate, Area 1	64	square inches					
684	Distance 1	15	inches					
685	Bottom Plates, Area 2	28	square inches					
686	Distance 2	1	inches					
687	Webs, area 3	48	square inches					
688	Distance 3	8	inches					
689	Mid Plate, area 4	18	square inches					
690	Distance 4	10	inches					
691	Total Area	158	square inches					
692								
693	location of the n.a. above the bottom of the bottom flange, y bar							
694	y bar = Sum(A*d)/Sum(A)	9.82	inches					
695								
696	Calculate the distance from the N.A. to the c.g. of each area:							
697	Area 1: Distance 1 - y bar	5.18						
698	Area 2: Distance 2 - y bar	-8.82						
699	Area 3: Distance 3 - y bar	-1.82						
700	Area 4: Distance 4 - y bar	0.18						
701								
702	I of Area 1	21.3	in^4					
703	I of Area 2	9.3	in^4					
704	I of Area 3	576.0	in^4					
705	I of Area 4	1.5	in^4					
706								
707	Sum (I + A*d^2) for Area 1	1736.76	in^4					
708	Sum (I + A*d^2) for Area 2	2188.90	in^4					
709	Sum (I + A*d^2) for Area 3	735.48	in^4					
710	Sum (I + A*d^2) for Area 4	2.07	in^4					
711								
712	Sum of Above (I + A*d^2)	4663.20	in^4					
713								
714	Available Moment of Inertia of the forward portion of the lower frame exceeds the required moment of Inertia to keep the bending stresses below 10,000 psi.							

Section 12b; Result of Ideas Beam Properties Calculation of the moment of Inertia for the forward portion of the lower frame.

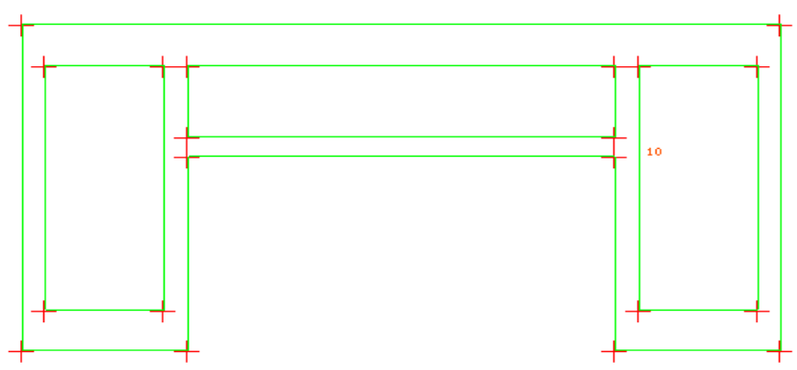


```
Area                        :   158.0
Prin. moment of inertia Y   :   18372.67
Prin. moment of inertia Z   :   4663.207
Shear ratio Y               :   2.798
Shear ratio Z               :   2.281
Torsional constant          :   3483.96
Warping constant            :   526531.1
Warping restraint factor    :   0.0
Eccentricity Y              : -7.392914
Eccentricity Z              :   0.0

X centroid location         : -7.657376E-15
Y centroid location         : -1.326184E-06
X shear center location     : -3.373835E-06
Y shear center location     :   7.392913
```

```
Is this mesh OK (Yes)
Y

Enter background color name or no. (0-BLACK)
15

Enter background color name or no. (15-WHITE)
0

Enter background color name or no. (0-BLACK)
15
```

	A	B	C	D	E	F	G	H
753								
754								
755	**Section 13; Rear Pin Support Bracket Bolt Sizing**							
756	Maximum tension load on Rear Pin Brackets	215,656	pounds	absolute value of the largest magnitude in column I				
757	Number of rear pin brackets	2.00		two upper support frames are used				
758	Maximum tesion load on one rear pin bracket	107,828		total load divided by the number of brackets (2)				
759	Number of tension bolts on each bracket	12.00		from drawing				
760	Size of tension bolts on each bracket	0.75	inch diameter	from drawing				
761	Grade of tension bolts on each bracket	A325						
762	Allowable tension load per bolt per AISC 9th ed.	19.40	kips	From AISC 9th edition, Table I-A in chapter 4, page 4-3				
763	Tensile capactity of all bolts	232,800	pounds	number of bolts times the allowable load per bolt per AISC				
764	Percent of actual load over allowable load	46%		calculation made to quantify what fraction of the allowable is used.				
765	Allowable tension load per bolt per AISC 9th	8.80	kips	From AISC 9th edition, Table I-A in chapter 4, page 4-3				
766	Number of A307 bolts needed	12.25		calculation made to consider the potential use of suspect or counterfit bolts				
767								
768	**Section 14; Rear Pin Support Bracket Weld Sizing**							
769	Weld Filler Material Yield Stress, psi	60,000	psi	assumes low strength filler metal, 70 ksi material				
770	Fillet Weld leg Size, inches	0.25	inches	assumed minimum fillet weld leg size				
771	Maximum tension load on Rear Pin Brackets	215,656	pounds	absolute value of the largest magnitude in column I of table 3				
772	Required Length of Weld, inches	67.78	inches	Calculated using formulas in AISC 9th edition, volume 2, connections.				
773	Length of weld at top where pin plates attach	96.00	inches	exceeds required weld length, therefore satisfactory.				
774	Length of weld at bottom of 2 inch plate	161.50	inches	exceeds required weld length, therefore satisfactory.				
775	Length of weld at the top of the base plate	225.50	inches	exceeds required weld length, therefore satisfactory.				
776								
777								
778								
779								
780								

	A	B	C	D	E	F	G	H
781								
782	**Section 15; UPPER FRAME ROTATION due to KNEELING**							
783								
784	Distance from Upper Frame Rear pin to Front Pin	174	inches					
785	Distance from Upper Frame Front Pin to Pallet Hook	74	inches					
786	Distance from Upper Frame Rear Pin to pallet hook	248	inches					
787	Vertical Travel of Pallet to disengage hooks	3.5	inches					
788	Required Angular Rotation of Upper Frame, Kappa	0.0141	radians					
789	Required Angular Rotation of Upper Frame	0.809	degrees					
790								
791	Vertical Travel of Kneeling Cylinder to disengage hooks	2.46	inches					
792	Stroke of Kneeling Cylinders (as specified)	3.75	inches					
793	Maximum Angular Rotation of Upper Frame, Kappa	0.0215	radians					
794	Maximum Angular Rotation of Upper Frame, Kappa	1.235	degrees					
795								
796	Cosine of Kappa (maximum)	0.999767842						
797	Change of Length @ Kneeling Cylinder bttm (max)	0.0404	inches					
798	Cosine of Kappa (nominal)	0.999900428						
799	Change of Length @ Kneeling Cylinder bttm (max)	0.0173	inches					
800								
801	Length of Kneeling Cylinder (retracted)	14	inches					
802	Length of Kneeling Cylinder (extended)	17.75	in					
803	Rotation of Kneeling Cyl if horz disp = 0, Lambda	0.001	radians					
804	Rotation of Kneeling Cyl if horz disp = 0, Lambda	0.056	degrees					
805								
806								
807	**Section 16; Maximum Loads on Lower Frame Rollers and Drive Traction Required:**							
808								
809	Estimated Weight of Lower Frame, pounds	31,000	pounds	From drawing 466518				
810	Total Weight on Lower Frame Rollers, pounds	365,433	pounds					
811	Static Friction on Rollers	6%		Steel roller on steel rail static friction value.				
812	Conversion factor, kN to lb-f	0.004448222	kN per lb-f					
813	Conversion factor , lb-f to kN	224.81	lb-f per kN					
814	Conversion Factor, N-m to ft-lb-f	0.73756	N-m / lb-f * ft					
815	Minimum Tractive Force to exceed friction	21,926	pounds	Total Weight on Lower Frame time static friction				
816	Minimum Tractive Force to exceed friction	98	kN	Conversion from pounds force to kN				
817	Nominal Wheel Diameter, inches	36.0	inches					
818	Nominal Wheel Diameter, inches	0.91	meters					
819	Required Drive Torque, N-m	44,591	N-m	Tractive effort in N time drive wheel diameter divided by 2				
820	Required Drive Torque, ft-lbs	32,889	ft-lbs	Conversion from N-m to ft-lb-f using 0.73756 factor				
821	Drive Wheel Radial Load, pounds	46,821	pounds	Load on drive wheel from R3 above				
822	Drive Wheel Radial Load, kN	208.27	kN	Conversion to kN using factor 224.81 kN per pound factor				
823	Required Wheel to floor coefficient of friction	0.47		Tractive effort divided by the reaction R3 from above				
824	Anticipated wheel to floor coefficient of friction	0.75		Rubber to concrete friction.				
825	Drive wheel radial load for anticipated coef of friction	29,235						
826								
827	Wheel Radial Load, maximum	47,000	pounds	Based on above drive wheel radial load, rounded to a even number.				
828	Wheel Radial Load, maximum	209.07	kN	converted to kN				
829	Wheel Radial Load, nominal	30,000	pounds	anticipated wheel to floor coefficient of friction and rounded up to an even number.				
830	Wheel Radial Load, nominal	133.45	kN	converted to kN				
831								
832	**Axle Sizing**							
833	Required Drive Torque, N-m	44,591	N-m					
834	Required Drive Torque, ft-lbs	32,889	ft-lbs					
835	Required Drive Torque, in-lbs	394,668	in-lbs					
836	Axle Outside Diameter, in	6.75	inches					
837	Axle Inside Diameter, in	6.00	inches					
838	Shear Stress, psi	17,396	psi					
839								
840	BOLT Circle Diameter	24	inches					
841	Number of bolts	8						
842	bolt diameter	0.50	inches					
843	Bolt shear	4,111	pounds					
844	bolt area	0.1963	square inches					
845	Bolt Shear Stress	20,938	psi					

	A	B	C	D	E	F	G	H
846								
847								
848	**Section 17; Lateral Loads on the Ash River Block Pivoter**							
849								
850	Weight of Table	204,000	pounds					
851	Weight of Complete 31 plane block	422,466	pounds					
852	Combined Table + 31 plane block weight	626,466	pounds					
853								
854	Assume Lateral Load percentage	5.00%						
855	Lateral Load	31,323	pounds					
856								
857	**Component of Lateral Load in the 'Z' direction (parallel to the beam, perpendicular to the table rotation axis)**							
858	This laterial load is taken by the pivot pins							
859	Shear load on the pivot pins is the square of the sums of the square for the vertical and horizontal forces:	627,248	pounds					
860	Number of shear planes	4						
861	Pivot Pin Diameter	4	inches					
862	Area of each shear plane	12.57	inches					
863	Total Shear Area (# planes * area per plane)	50.27	inches					
864	Shear Stress	12,478.71	psi					
865								
866	Shear Pin Material:	4140	Bar, Steel, ANSI 4140 turned, precision ground and polished round material, 4.00 inch outside diameter by					
867	Shear Pin Material Yield Stress:	131,000	psi					
868								
869	Allowable Shear Stress per AISC 9th, = 0.4*Fy	52,400.00	psi					
870	Allowable shear stress exceeds actual yield stess, therefore this pin sizing and material choice is satisfactory							
871								
872	**Component of Lateral Load in the 'X' direction (perpendicular to the beam, parallel to the table rotation axis)**							
873	This Lateral load is resisted by a couple from the two upper vertical supports.							
874	Lateral Load	31,323	pounds					
875	Distance of Lateral Load Above Pivot centerline	5.10	inches	sum of the c.g's * distance wrt pivot / sum c.g's				
876	Sum the moments about the point (a) where the left vertical support intersects the pin centerline and set equal to zero to find the reaction from the right vertical support.							
877	ΣMa = 0 = 64047*26.48 +310*R2							
878	R2 =	515	pounds					
879								