	A	B	C	D	E	F	G	H
1	**Dave Pushka's Ash River Block Pivoter Calculations April 2011**							
2	**Section 1; Detector Driven Inputs**							
3	**Detector Block Weights and Dimensions and Loads to Table:**							
4	Weight of a PVC Block (empty) Nominal	353,229	pounds	176.6	tons (short)			
5	Weight of a PVC Block (empty) minimal	295,187	pounds	147.6	tons (short)			
6	Weight of a PVC Block (empty) maximum	422,466	pounds	211.2	tons (short)			
7	Weight of a block Used for Calculations below	**422,466**	pounds	211.2	tons (short)			
8	Nominal Thickness of a block	2053.6	millimeters	80.85	inches			
9	Nominal H or W of a Block	15.748	m	620	in	51.6666667	ft	
10	Volume of Block	17,985	ft3					
11	Apparent Density of Empty Block	23.5	#/ft3					
12	Block loading on table when horizontal	158.26	#/square foot					
13								
14	**Section 2; Location of Major Component Center of Gravities with respect to the Table Pivot**							
15	**Geometry of Block relative to Table Pivot:**							
16	Weight of a block Used for Calculations below	422,466	pounds	Maximum weight of the PVC block calculated from the extrusion weights of as-made parts.				
17	Distance from table top to pivot (vertical direction when table horizontal)	8.25	inches	Positive means that the pivot is below the top surface of the table when the table is horizontal				
18	Vertical Distance from pivot to block c.g when table is horizontal	48.675	inches	equals half the thickness of a block plus the goal distance from the table top to the pivot shown right above				
19	Horizontal Distance from Pivot to block c.g. when table is horizontal (positive number is toward the forks)	-16.000	inches	zero undicates that the pivot is right under the block c.g., positive means that the pivot is towards the forks				
20	Moments Generated by the Block Weight on the Table When Table is Vertical:	20,563,605	in-lbs	Vertical Distance (B16) to block c.g. times the Block weight (B14)				
21	Moments Generated by the Block Weight on the Table When Table is Horizontal:	(6,759,452)	in-lbs	Horizontal Distance (B17) to block c.g. times the Block weight (B14)				
22								
23	**Geometry of Pallet relative to Table Pivot:**							
24	Weight of the Pallet Nominal	18,600	pounds	Pallet weight comes from the Ideas Solid Model of the pallet				
25	Distance from Pallet surfact to Pallet c.g.	3	inches	Pallet c.g. location relative to surface taken from the Ideas 3D				
26	Vertical Distance from pivot to block c.g when table is horizontal	48.675	inches	assumed same as the distance for the PVC block calculated above				
27	Horizontal Distance from Pivot to pallet c.g. when table is horizontal (positive number is toward the forks)	297.000	inches	zero undicates that the pivot is right under the block c.g., positive means that the pivot is towards the forks				
28	Moments Generated by the Pallet Weight on the Table When Table is Vertical:	905,359	in-lbs	Vertical Distance (B24) to Pallet c.g. times the Pallet weight (B22)				
29	Moments Generated by the Pallet Weight on the Table When Table is Horizontal:	5,524,200	in-lbs	Horizontal Distance (B25) to Pallet c.g. times the Pallet weight (B22)				
30								
31	**Geometry of Table relative to Table Pivot:**							
32	Weight of Table, Nominal	204,000	pounds	Based on Estimate of Table Weight as Modeled by Ernie Villegas				
33	Vertical Distance from pivot to table c.g when table is horizontal	-5.200	inches	negative means the c.g. is below the pivot elevation when table is horizontal				
34	Horizontal Distance from Pivot to table c.g. when table is horizontal (positive number is toward the forks)	55.000	inches	zero undicates that the pivot is right under the block c.g., positive means that the pivot is towards the forks				
35	Moments Generated by the Table Weight on the Table When Table is Vertical:	(1,060,800)	in-lbs	Vertical Distance (B31) to Table c.g. times the Table weight (B30)				
36	Moments Generated by the Table Weight on the Table When Table is Horizontal:	11,220,000	in-lbs	Horizontal Distance (B32) to Table c.g. times the Table weight (B30)				
37								

	A	B	C	D	E	F	G	H
38	**Section 3; Sum of the Rotation Moments (Torques) Due to C.G. Positions with respect to Table Pivot**							
39	**Combined PVC Block and Pallet Moments:**							
40	Weight of PVC Block and Pallet	441,066	pounds	Sum of cells B16 + B24 to sum the weight				
41	Moments Generated by the Block + Pallet Weight on the Table When Table is Vertical:	21,468,964	in-lbs	Sum of cells B20 + B28 to sum the Moment				
42	Moments Generated by the Block + Pallet Weight on the Table When Table is Horizontal:	(1,235,252)	in-lbs	Sum of cells B21 + B29 to sum the Moment				
43								
44	**Combined Table, PVC Block and Pallet Moments:**							
45	Weight of Table, PVC Block and Pallet	645,066	pounds	Sum of cells B16 + B24 + B32to sum the weight				
46	Moments Generated by the Block + Pallet + Table Weight on the Table When Table is Vertical:	20,408,164	in-lbs	Sum of cells B20 + B28+ B35 to sum the Moment				
47	Moments Generated by the Block + Pallet + Table Weight on the Table When Table is Horizontal:	9,984,748	in-lbs	Sum of cells B21 + B29+ B36 to sum the Moment				
48								
49	**Location of Combined C.G. values for Table, PVC Block and Pallet:**							
50	Vertical Distance for C.G. ofTable, PVC Block and Pallet	31.637	inches	Calculated by dividing the sum of the moments (B46) by the Combined weight (B45)				
51	Horizontal Distance for c.g. of Table, PVC Block and Pallet	15.479	inches	Calculated by dividing the sum of the moments (B47) by the Combined weight (B45)				
52								
53	**Section 4; Geometry of the Hydraulic Pivot Cylinders**							
54	**Cylinder, Pivot, and Anchor Locations:**							
55	Horizontal distance (when table is horz) from pivot to cylinder connection	208.000	inches	labled as distance "x" on sketch 1				
56	Vertical distance (when table is horz) from pivot to cylinder connection	60.000	inches	labled as distance "y" on sketch 1				
57	Horizontal distance from pivot to cylinder stationary connection	135.000	inches	labled as distance "u" on sketch 1				
58	Vertical distance from pivot to cylinder stationary connection	228.000	inches	labled as distance "v" on sketch 1				208
59								
60								
61	**Cylinder Distances when table Horizontal:**							
62	horizontal length	343.000	inches	Sum of Horizontal distances (B55) + (B57)				
63	vertical length	168.000	inches	Change in Vertical disances (B58) - (B56)				
64	Overall length	381.933	inches	square of the sum of the squares of (B62) and (B63)				
65	Angle of Cylinder above horizontal	0.4555	radians	calculated using the inverse tangent of (B63) over (B62)				
66	Angle of Cylinder above horizontal	26.10	degrees	(B65) converted to degrees				
67								
68	**Cylinder Loads with Table Horizontal (both cylinders share these loads) :**							
69	Moment to counter	9,984,748	in-lbs	Moment is due to Block + Pallet + Table and is equal to the value calculated in (B47)				
70	Lever arm pivot to cylinder connection	208	in	Value from (B55)				
71	Vertical Component of Cylinder Force	48,004	lbs	(B69) divided by (B70)				
72	Horizontal Component of Cylinder Force	98,007	lbs	Square root of the sum of the squared = sqrt((B73)^2 - (B71)^2)				
73	Axial component of cylinder force	109,132	lbs	Calculated by (B71)/sin(B65)				
74								
75	**Cylinder Loads with Table Vertical (both cylinders share these loads):**							
76	Moment to counter	20,408,164	in-lbs	Moment is due to Block + Pallet + Table and is equal to the value in cell (B46)				
77	Lever arm pivot to cylinder connection	228	in	Value from (B58)				
78	Horizontal Component of Cylinder Force	89,509	lbs	Calculated by (B76)/ (B77); Cylinder axis is horzontal at this condition				
79								
80	**Cylinder Loads with Table Vertical (both cylinders share these loads):**							
81	Moment to counter	(1,060,800)	in-lbs	Moment is due to Table and equals the value in cell (B35)				
82	Lever arm pivot to cylinder connection	228	in	Value from (B58)				
83	Horizontal Component of Cylinder Force	(4,653)	lbs	Calculated by (B81)/ (B82); Cylinder axis is near horzontal at this condition				
84								
85								

Section 5; Geometry Calculations of the Hydraulic Cylinder Ends:

Length "a"	264.970	inches	this is the distance from the pivot to the stationary pin for the cylinder; calculated using the
Length "b"	216.480946	inches	this is the distance from the pivot to the table mounted (moving) pin for the cylinder; calculated
Length "c" (initial - when table is horizontal)	381.9332402	inches	this is the length of the cylinder when extended to put the table surface horizontal cylinder open length;
length "c" (final when table is vertical)	77.621	inches	this is the length of the cylinder when the table is vertical, cylinder closed length; calculated using the
Angle 'phi' φ (constant)	16.09081635	degrees	angle below horizontal from table pivot to the table mounted (moving) pin for the cylinder; calculated
Angel 'alpha closed', α	106.091	degrees	angle alpha when the table is vertical; calculated using complementary angle with angle phi, φ
Angle 'Theta closed' θ	14.53918214	degrees	angle theta when the table is vertical; calculated using the law of cosines
Angle 'Theta open'	104.5391821	degrees	angle from table cylinder pivot, vertex at pivot, to cylinder stationary connection when the table is horizontal; calculated by adding 90 degrees (table
Angle 'alpha open' α	42.186	degrees	angle alpha when the table is horizontal; calculated using the law of cosines
Angle 'Beta open' β	33.275	degrees	angle from cylinder moving pivot, vertiex at cyl stational pivot, to table pivot wne the table is
Cylinder Stroke (change of length c)	304	inches	Actual cylinders specified with a 312 inch stroke - See Phelps Industries Dwg 10114-C

SKETCH 1 4-17-09 DAVE PUSHKA

GEOMETRY WHEN TABLE IS HORIZONTAL:

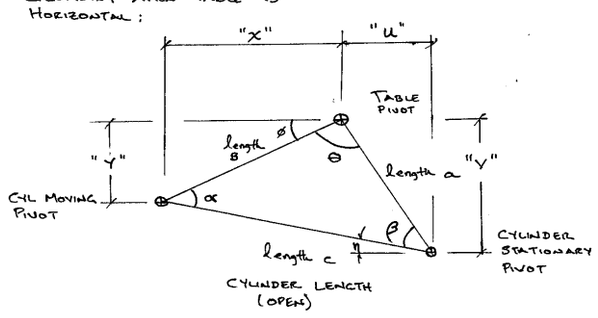

angle η IS THE ANGLE OF THE CYLINDER ABOVE HORIZONTAL.

GEOMETRY WHEN TABLE IS VERTICAL:

length a IS CONSTANT

length B IS CONSTANT

$\alpha_{CLOSED} = 90 + \phi$

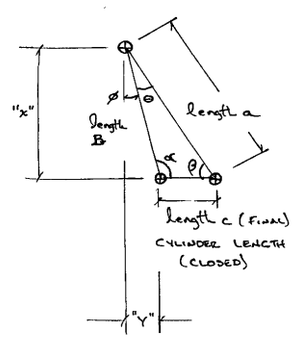

SKETCH 3 4-21-09 DAVE PUSHKA

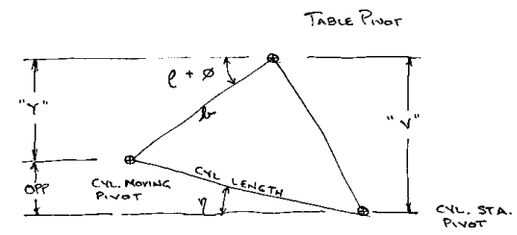

CYLINDER ANGLE, η =

$$\sin \eta = \frac{OPP}{HYP} = \frac{OPP}{\text{CYLINDER LENGTH}}$$

OPP = LENGTH "V" − LENGTH "Y"

∠ø = CONSTANT

∠ρ = TABLE ROTATION

LENGTH "Y" = $b \sin(\phi + \rho)$

OPP = "V" − $b \sin(\phi + \rho)$

$$\sin \eta = \frac{V - b \sin(\phi + \rho)}{\text{CYL. LENGTH}}$$

$$\therefore \eta = \arcsin\left(\frac{V - b \sin(\phi + \rho)}{\text{CYL. LENGTH}}\right)$$

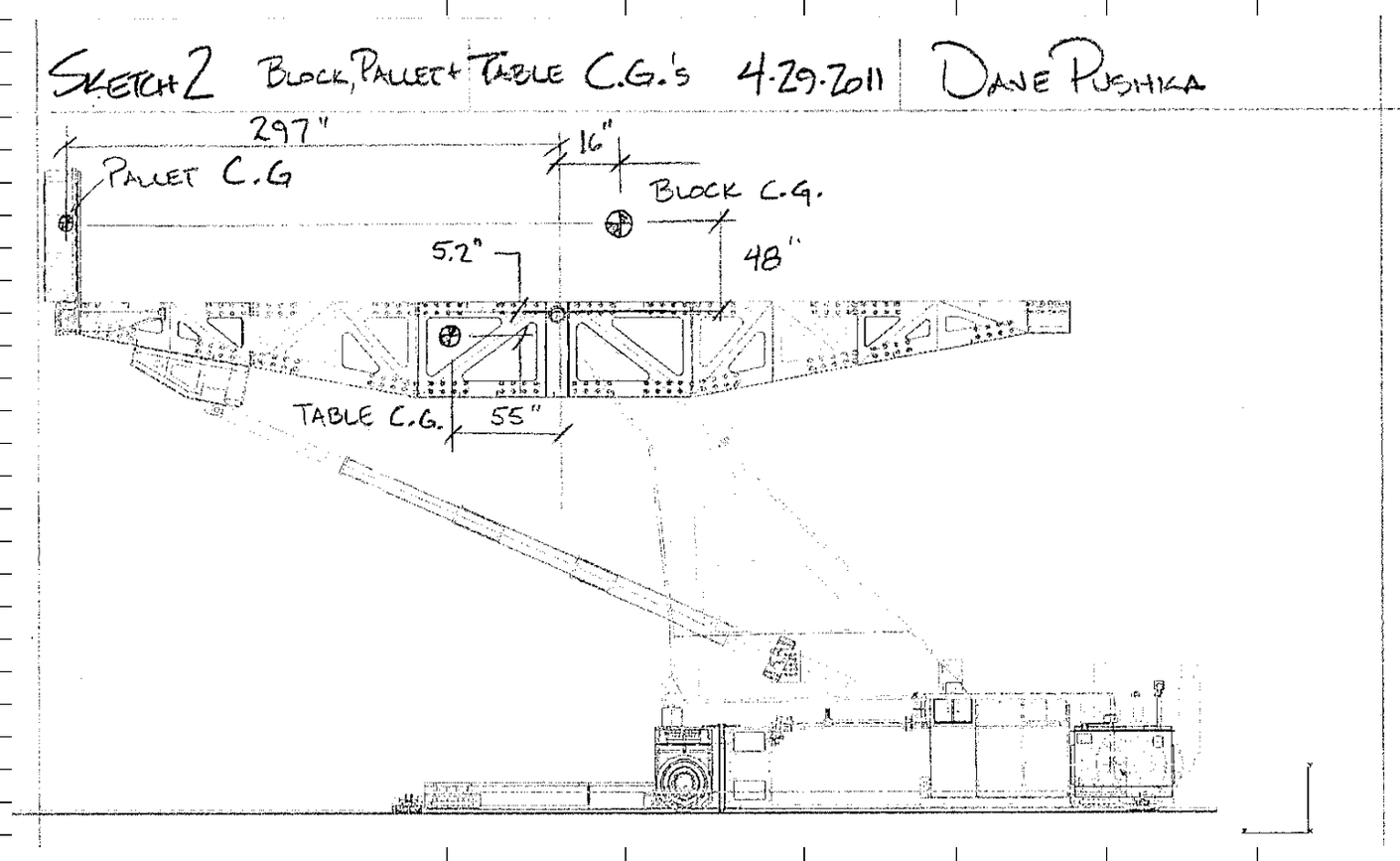
SKETCH 2 BLOCK, PALLET + TABLE C.G.'s 4-29-2011 DAVE PUSHKA
297"
16"
PALLET C.G
BLOCK C.G.
5.2"
48"
TABLE C.G.
55"

	A	B	C	D	E	F	G	H
167	**Section 6; Same calculations as in Section 5 repeated for many table rotation angles**							
168	**TABLE 1, Geometry of the Cylinder about the Table Pivot Pin as a function of Table Rotation Angle**							
169								
170								
171								
172	Table angle relative to horizontal, rho ρ, in degrees	Angle Theta, θ	Cylinder Length	Angle Alpha, α	Angle Beta, β	Cylinder Angle above horizontal, η,	Number of cylinder Stages extended	
173		degrees	inches	degree	degree	degree		
174	2	106.539	386.95	41.028	32.433	26.94	4.00	
175	0	104.539	381.93	42.186	33.275	26.10	3.94	
176	-5	99.539	368.90	45.100	35.360	24.01	3.77	
177	-10	94.539	355.18	48.046	37.415	21.95	3.59	
178	-15	89.539	340.81	51.028	39.433	19.94	3.41	
179	-20	84.539	325.82	54.053	41.408	17.96	3.22	
180	-25	79.539	310.23	57.130	43.331	16.04	3.02	
181	-30	74.539	294.09	60.270	45.191	14.18	2.81	
182	-35	69.539	277.43	63.485	46.976	12.39	2.60	
183	-40	64.539	260.30	66.793	48.668	10.70	2.38	
184	-45	59.539	242.72	70.216	50.245	9.13	2.15	
185	-50	54.539	224.76	73.786	51.675	7.70	1.92	
186	-55	49.539	206.46	77.543	52.918	6.45	1.69	
187	-60	44.539	187.89	81.547	53.913	5.46	1.45	
188	-65	39.539	169.12	85.884	54.577	4.79	1.21	
189	-70	34.539	150.24	90.681	54.780	4.59	0.96	
190	-75	29.539	131.39	96.138	54.323	5.05	0.72	
191	-80	24.539	112.75	102.579	52.882	6.49	0.48	
192	-85	19.539	94.64	110.555	49.906	9.46	0.25	
193	-90	14.539	77.62	121.022	44.439	14.93	0.03	
194	-86	18.539	91.13	112.408	49.053	10.32	0.21	
195	-87	17.539	87.66	114.370	48.091	11.28	0.16	
196	-88	16.539	84.25	116.450	47.011	12.36	0.12	
197	-89	15.539	80.90	118.663	45.798	13.57	0.08	
198								
199	Angle Theta, θ for the initial condition of 0 degrees rotation comes from the value calculated in cell (B94), subsequent values are calculated by adding							
200	Cylinder Length is calculated using the law of cosines (same as above for cell B85) but using the current value of angle theta θ in column B							
201	Angle Alpha, α is calculated using the law of cosines (same as above for cell B89) but using the current value of cylinder length in column C							
202	Angle Beta, β is calculated by subtraction angle Alpha, α and angle Theta, θ from 180 degrees							
203	Cylinder Angle above horizontal, η, = arcsin((v-b*(sin(φ + η))) / cylinder length)							
204	Table 2 Moments are calculated by weight (in Table 2 cell B212) * ((cell (B32)*cos (rho) + cell (B31)* sin (rho))							
205	Block Moments are calculated by weight (in cell H212) * ((cell (B25)*cos (rho) + cell (B24)* sin (rho))							
206	Pallet Moments are calculated by weight (in cell I212) * ((cell (B17)*cos (rho) + cell (B16)* sin (rho))							
207	Sum of Moments from Table + Pallet is the sum of value in column B + value in column C							
208	Sum of Moments from Table + Pallet + Block is the sum of value in column B + value in column C+ value in column D							

	A	B	C	D	E	F	G	H
209	**TABLE 2, Moments about the Table Pivot Pin as a function of Table Rotation Angle**							
210								
211	Weights calculated above used in calculating the	Table Wt	Pallet Wt	Block Wt				
212		204,000	18,600	422,466				
213	Table angle relative to horizontal, rho ρ, in degrees	Table Moment	Pallet Moment	Block Moment	Sum of Moments from Table + Pallet	Sum of Moments from Table+Pallet +Block	Horizontal distance of combined T+P+B C.G. w.r.t main pin	Vertical distance of combined T+P+B C.G. w.r.t main pin
214		in-lbs	in-lbs	in-lbs	in-lbs	in-lbs	inches	inches
215	2	11,250,186	5,489,238	(7,472,994)	16,739,425	9,266,430	14.4	32.2
216	0	11,220,000	5,524,200	(6,759,452)	16,744,200	9,984,748	15.5	31.6
217	-5	11,084,850	5,582,086	(4,941,494)	16,666,936	11,725,441	18.2	30.2
218	-10	10,865,337	5,597,489	(3,085,929)	16,462,826	13,376,897	20.7	28.5
219	-15	10,563,133	5,570,292	(1,206,877)	16,133,424	14,926,547	23.1	26.5
220	-20	10,180,536	5,500,701	681,360	15,681,237	16,362,597	25.4	24.4
221	-25	9,720,460	5,389,247	2,564,411	15,109,706	17,674,117	27.4	22.1
222	-30	9,186,405	5,236,777	4,427,945	14,423,182	18,851,127	29.2	19.6
223	-35	8,582,436	5,044,452	6,257,780	13,626,888	19,884,668	30.8	17.0
224	-40	7,913,150	4,813,736	8,039,989	12,726,886	20,766,875	32.2	14.3
225	-45	7,183,639	4,546,385	9,761,010	11,730,024	21,491,034	33.3	11.4
226	-50	6,399,457	4,244,432	11,407,743	10,643,889	22,051,632	34.2	8.5
227	-55	5,566,571	3,910,177	12,967,656	9,476,748	22,444,405	34.8	5.4
228	-60	4,691,320	3,546,164	14,428,878	8,237,484	22,666,362	35.1	2.4
229	-65	3,780,366	3,155,161	15,780,287	6,935,527	22,715,814	35.2	-0.7
230	-70	2,840,640	2,740,147	17,011,599	5,580,787	22,592,385	35.0	-3.7
231	-75	1,879,296	2,304,277	18,113,442	4,183,573	22,297,015	34.6	-6.8
232	-80	903,648	1,850,871	19,077,431	2,754,520	21,831,951	33.8	-9.8
233	-85	(78,876)	1,383,379	19,896,229	1,304,503	21,200,732	32.9	-12.7
234	-90	(1,060,800)	905,359	20,563,605	(155,441)	20,408,164	31.6	-15.5
235	-86	(275,548)	1,288,502	20,041,997	1,012,954	21,054,951	32.6	-13.3
236	-87	(472,137)	1,193,232	20,181,661	721,095	20,902,756	32.4	-13.8
237	-88	(668,581)	1,097,599	20,315,177	429,018	20,744,194	32.2	-14.4
238	-89	(864,822)	1,001,631	20,442,504	136,809	20,579,313	31.9	-14.9
239								
240	Angle Theta, θ for the initial condition of 0 degrees rotation comes from the value calculated in cell (B94), subsequent values are calculated by adding the angle rho (η) from this initial value							
241	Cylinder Length is calculated using the law of cosines (same as above for cell B85) but using the current value of angle theta θ in column B							
242	Angle Alpha, α is calculated using the law of cosines (same as above for cell B89) but using the current value of cylinder length in column C							
243	Angle Beta, β is calculated by subtraction angle Alpha, α and angle Theta, θ from 180 degrees							
244	Cylinder Angle above horizontal, η, = arcsin((v-b*(sin(φ + η))) / cylinder length)							
245	Table 2 Moments are calculated by weight (in Table 2 cell B212) * ((cell (B32)*cos (rho) + cell (B31)* sin (rho))							
246	Block Moments are calculated by weight (in cell H212) * ((cell (B25)*cos (rho) + cell (B24)* sin (rho))							
247	Pallet Moments are calculated by weight (in cell I212) * ((cell (B17)*cos (rho) + cell (B16)* sin (rho))							
248	Sum of Moments from Table + Pallet is the sum of value in column B + value in column C							
249	Sum of Moments from Table + Pallet + Block is the sum of value in column B + value in column C+ value in column D							
250								

SKETCH 4 4-21-09 DAVE PUSHKA

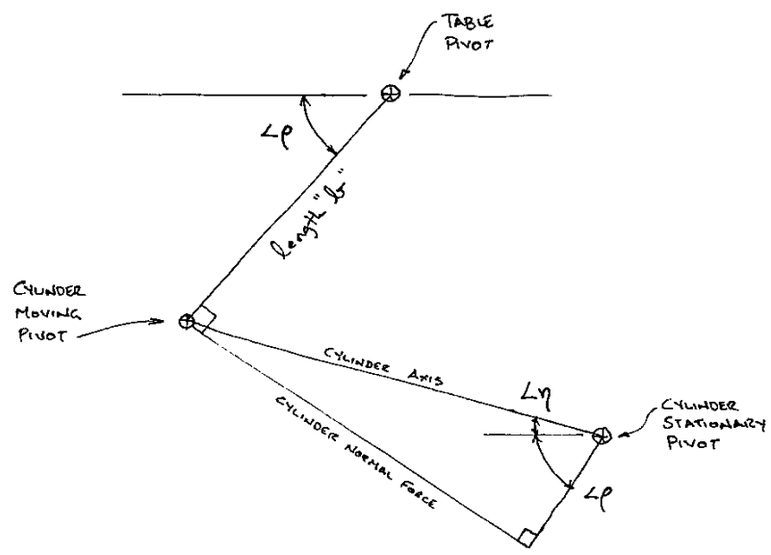

$$\Sigma M_{\text{TABLE PIVOT}} = 0 = M_{\text{TABLE}} + M_{\text{PALLET}} + M_{\text{BLOCK}} - \text{"}b\text{"} \times (\text{CYL. NORMAL FORCE})$$

$$\therefore \text{ CYLINDER NORMAL FORCE} = \frac{M_T + M_P + M_B}{\text{"}b\text{"}}$$

$$\text{CYLINDER AXIAL FORCE} = \frac{\text{CYLINDER NORMAL FORCE}}{\sin(\eta + \rho)}$$

SKETCH 5 5-6-09 DAVE

CALCULATIONS FOR MOMENT GENERATED BY TABLE ABOUT TABLE PIVOT.

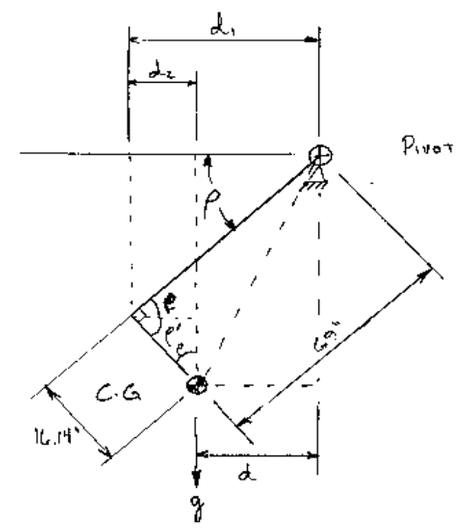

$$\text{MOMENT} = mg \times d$$

$$d = d_1 - d_2$$

$$d_1 = 69 \cos\rho$$

$$d_2 = 16.14 \sin\rho$$

$$\cancel{d = (69 - 16.14)\cos\rho}$$

$$d = 69\cos\rho - 16.1\sin\rho$$

$$\therefore M = (mg)(69\cos\rho - 16.1\sin\rho)$$

	A	B	C	D	E	F	G	H
293	**TABLE 3: Cylinder Loads as a function of Rotation Angle, Combined values are for both sides, individual values (shown below in table 4) are for one cylinder.**							
294	Table angle relative to horizontal, rho ρ, in degrees	combined cylinder normal load to counter act moment for T+P+B	combined Cylinder axial load, to counter act moment for T+P+B	combined Cylinder normal load, to counter act moment for T+P	combined Cylinder axial load, to counter act moment for T+P	combined Cylinder normal load, to counter act moment for Table only	combined Cylinder axial load, to counter act moment for Table only	
295		pounds	kips	pounds	kips	kips	kips	
296	2	42,805	101.52	77,325	183.4	51,968	123	
297	0	46,123	104.86	77,347	175.8	51,829	118	
298	-5	54,164	111.69	76,990	158.8	51,205	106	
299	-10	61,792	116.75	76,047	143.7	50,191	95	
300	-15	68,951	120.40	74,526	130.1	48,795	85	
301	-20	75,584	122.87	72,437	117.8	47,027	76	
302	-25	81,643	124.35	69,797	106.3	44,902	68	
303	-30	87,080	124.95	66,626	95.6	42,435	61	
304	-35	91,854	124.80	62,947	85.5	39,645	54	
305	-40	95,929	123.96	58,790	76.0	36,554	47	
306	-45	99,274	122.52	54,185	66.9	33,184	41	
307	-50	101,864	120.52	49,168	58.2	29,561	35	
308	-55	103,678	118.03	43,776	49.8	25,714	29	
309	-60	104,704	115.10	38,052	41.8	21,671	24	
310	-65	104,932	111.81	32,038	34.1	17,463	19	
311	-70	104,362	108.25	25,780	26.7	13,122	14	
312	-75	102,998	104.57	19,325	19.6	8,681	9	
313	-80	100,849	101.04	12,724	12.7	4,174	4	
314	-85	97,933	98.23	6,026	6.0	(364)	(0)	
315	-90	94,272	97.57	(718)	(0.7)	(4,900)	(5)	
316	-86	97,260	97.85	4,679	4.7	(1,273)	(1)	
317	-87	96,557	97.57	3,331	3.4	(2,181)	(2)	
318	-88	95,825	97.41	1,982	2.0	(3,088)	(3)	
319	-89	95,063	97.40	632	0.6	(3,995)	(4)	
320								
321	combined cylinder normal load to counter act moments for T + P + B is the moment from column F of Table 2 in the table above * the cylinder to pivot lever arm (length b) from cell B88							
322								
323	combined cylinder axial load, to counter act moment for T + P + B is calculated by dividing the value in Table 3, column B by the sin (η) and by 1000 to convert unit to kips							
324								
325	combined cylinder normal load to counter act moments for T + P is the moment from column E in the Table 2 * the cylinder to pivot lever arm (length b) from cell B88							
326								
327	combined cylinder axial load, to counter act moment for T + P is calculated by dividing the value in Table 3, column D by the sin (η) and by 1000 to convert unit to kips							
328								
329	combined cylinder normal load to counter act moments for Table only is the moment from column B in the table 2 above * the cylinder to pivot lever arm (length b) from cell B88							
330								
331	combined cylinder axial load, to counter act moment for Table only is calculated by dividing the value in Table 3, column F by the sin (η) and by 1000 to convert unit to kips							
332								

	A	B	C	D	E	F	G	H
333	**TABLE 4: Cylinder Loads as a function of Rotation Angle, Combined values (shown above in Table 3) are for both sides, individual values are for one cylinder.**							
334								
335								
336	Table angle relative to horizontal, rho ρ, in degrees	individual cylinder load, to counter act moment for T+P+B	individual cylinder load, to counter act moment for T+P	individual cylinder load, to counter act moment for Table only	individual cylinder load, to counter act moment for T+P	individual cylinder load, to counter act moment for Table only	Cylinder Length, feet	Number of Stages Extended
337		kips	kips	kips	kips	kips	feet	
338	2	50.8	92	62	91.7	61.6	32.2	4.00
339	0	52.4	88	59	87.9	58.9	31.8	3.94
340	-5	55.8	79	53	79.4	52.8	30.7	3.77
341	-10	58.4	72	47	71.8	47.4	29.6	3.59
342	-15	60.2	65	43	65.1	42.6	28.4	3.41
343	-20	61.4	59	38	58.9	38.2	27.2	3.22
344	-25	62.2	53	34	53.2	34.2	25.9	3.02
345	-30	62.5	48	30	47.8	30.4	24.5	2.81
346	-35	62.4	43	27	42.8	26.9	23.1	2.60
347	-40	62.0	38	24	38.0	23.6	21.7	2.38
348	-45	61.3	33	20	33.4	20.5	20.2	2.15
349	-50	60.3	29	17	29.1	17.5	18.7	1.92
350	-55	59.0	25	15	24.9	14.6	17.2	1.69
351	-60	57.6	21	12	20.9	11.9	15.7	1.45
352	-65	55.9	17	9	17.1	9.3	14.1	1.21
353	-70	54.1	13	7	13.4	6.8	12.5	0.96
354	-75	52.3	10	4	9.8	4.4	10.9	0.72
355	-80	50.5	6	2	6.4	2.1	9.4	0.48
356	-85	49.1	3	(0)	3.0	-0.2	7.9	0.25
357	-90	48.8	(0)	(3)	-0.4	-2.5	6.5	0.03
358	-86	48.9	2	(1)	2.4	-0.6	7.6	0.21
359	-87	48.8	2	(1)	1.7	-1.1	7.3	0.16
360	-88	48.7	1	(2)	1.0	-1.6	7.0	0.12
361	-89	48.7	0	(2)	0.3	-2.0	6.7	0.08
362								
363								
364	individual cylinder load to counter act moment for T + P + B assume two cylinders equally share the load so this is the value in Table 3, column B divid							
365	individual cylinder load to counter act moment for T + P assume two cylinders equally share the load so this is the value of Table 3, Column D divided							
366	individual cylinder load to counter act moment for Table assume two cylinders equally share the load so this is the value of Table 3, Column F divided							
367	Cylinder Length in feet is calculated by dividing the value in cell C in the above table (the cylinder length) by 12 to convert from inches to feet.							
368								
369								

Graph 1; Individual Cylinder Load as a function of Table rotation Angle

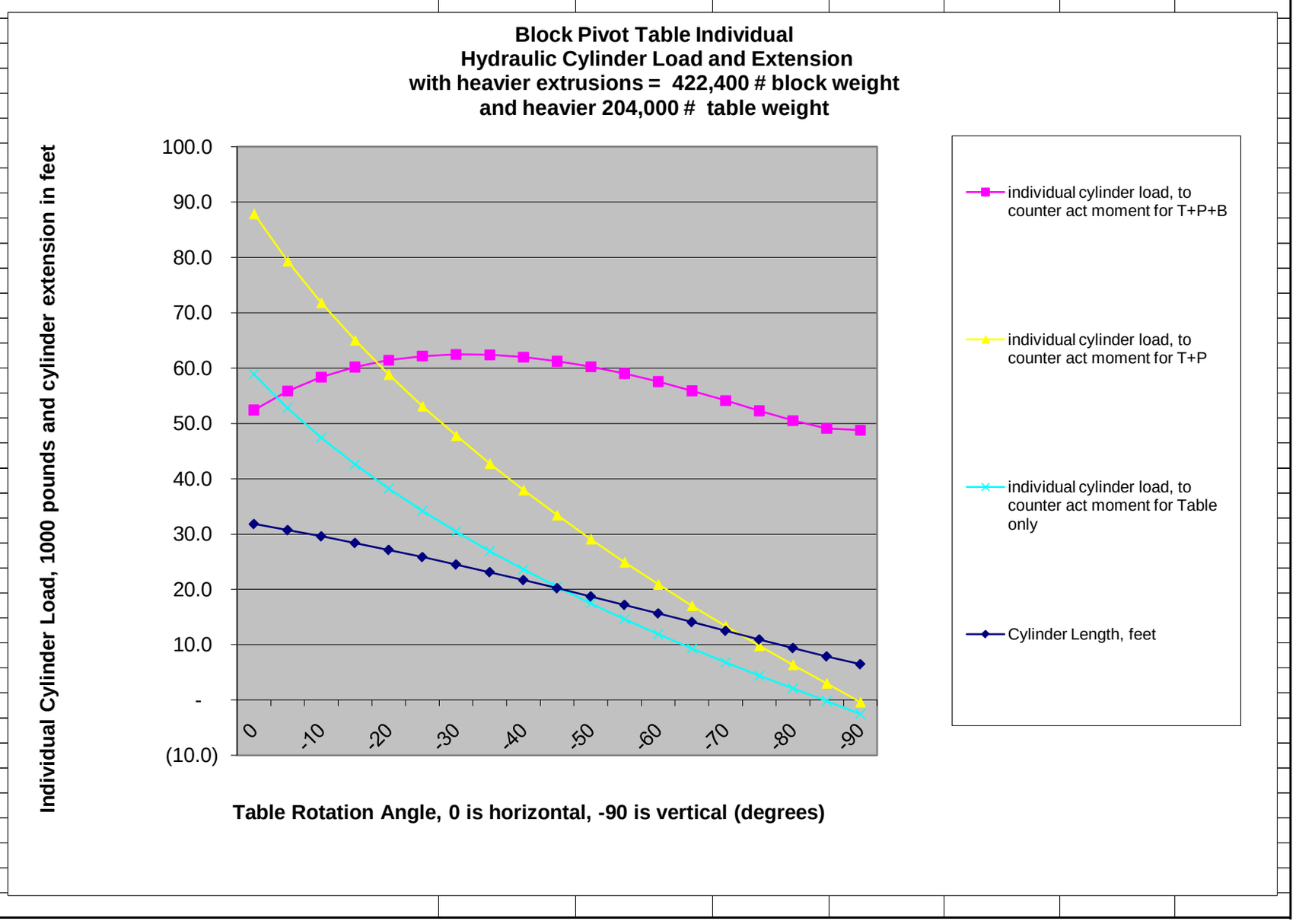

	A	B	C	D	E	F	G	H
408								
409	**Section 7; Hydraulic Cylinder Dimensions and Load Capability**							
410								
411	**Phelps Pivot Cylinder Diameters:**							
412	Barrel inner diameter	14.125	inches					
413	1st moving stage o.d	13.25	inches					
414	2nd moving stage o.d.	11.5	inches					
415	3rd moving stage o.d.	10	inches					
416	Final moving stage o.d.	8.375	inches					
417								
418	**Phelps Pivot Cylinder Areas:**							
419	Barrel	156.7	square inches					
420	1st moving stage	137.9	square inches					
421	2nd moving stage	103.9	square inches					
422	3rd moving stage	78.5	square inches					
423	Final moving stage	55.1	square inches					
424								
425	**Maximum Cylinder Pressure**	1800	psi					
426	**Maximum Cylinder Force for each stage**							
427	Barrel	282,059	pounds					
428	1st moving stage	248,196	pounds					
429	2nd moving stage	186,964	pounds					
430	3rd moving stage	141,372	pounds					
431	Final moving stage	99,159	pounds					
432								
433	Cylinder Closed Length	75	inches					
434	Length per Stage	78	inches					
435								
436								
437								
438								
439								
440								

	A	B	C	D	E	F	G	H
441								
442	**Section 8; Geometry of the Upper Frame Weldment:**							
443	Horizontal distances on the Upper Frame:							
444	Rearward Pin to table Pivot	240	inches					
445	Rearward Pin to Forward Pin	174	inches					
446	Rearward Pin to Cylinder Stationary Pin	105	inches					
447								
448	Vertical distances on the Upper Frame:							
449	Rearward Pin to table Pivot	240	inches	see dwg 3929.000-ME-486361				
450	Rearward Pin to Forward Pin	0	inches					
451	Rearward Pin to Cylinder Stationary Pin	32	inches					
452								
453	Weight of Upper Frame_4	36,274	pounds					
454	c.g. Location rearward pin center line, horizontal	137.2359	inches	measured from solid model of Upper_Frame_4				
455	c.g. Location rearward pin center line, vertical	100.6872	inches	measured from solid model of Upper_Frame_4				
456	Load on Rearward Pin due to Upper_Frame_4	7,664	pounds	calculated by summing the moments about the forward pin				
457	Load on Forward Pin due to Upper_Frame_4	28,610	pounds	calculated by summing the forces in the vertical direction				

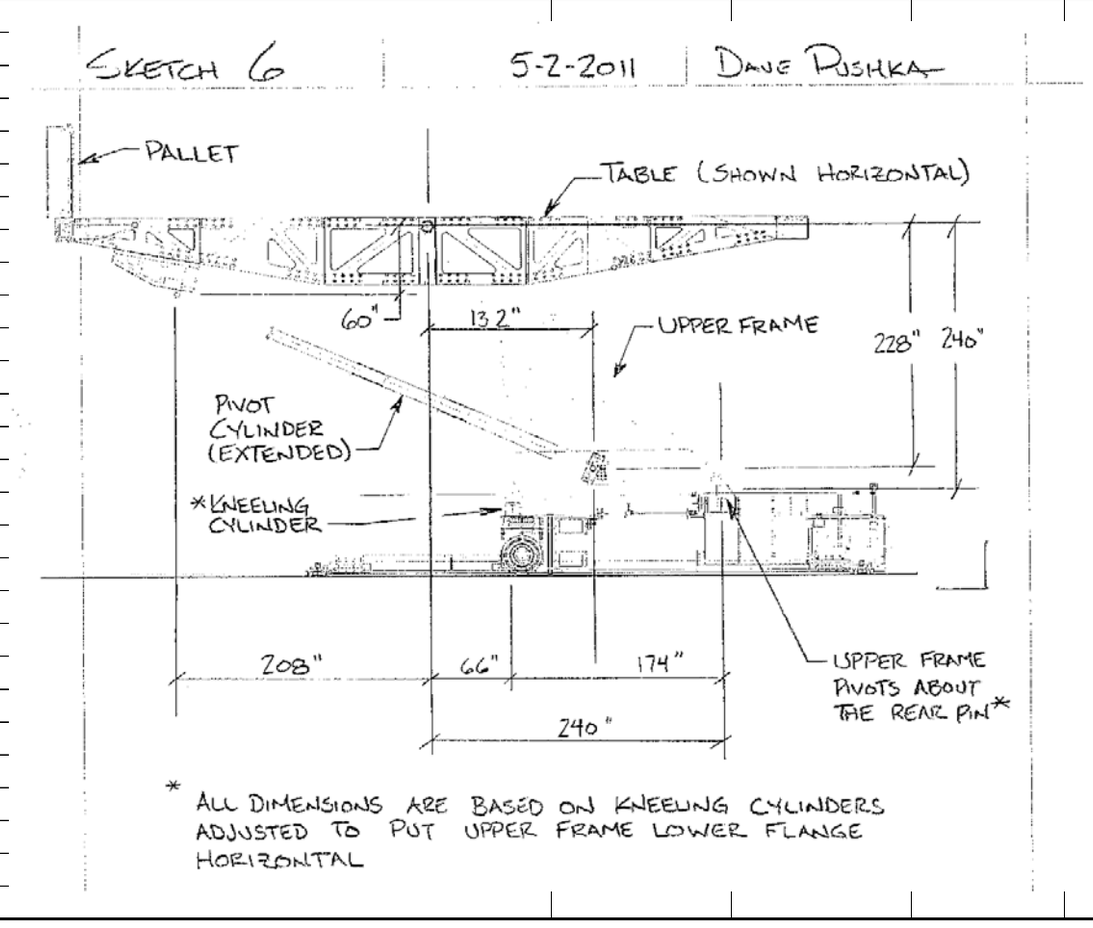

	A	B	C	D	E	F	G	H
486	**TABLE 5, Maximum Reaction on Table Pivot, Cylinder Ends, assumes two cylinders sharing the total load and load from Table + Pallet + Block (T + P + B):**							
487	Table angle relative to horizontal, rho ρ, in degrees	Horizontal Load on stationary cylinder pivot, pounds	Vertical Load on stationary cylinder pivot, pounds	Horizontal Load on table pivot, pounds	Vertical Load on table pivot, pounds	Vertical Load on Upper Frame Forward Pin, pounds	Vertical Load on Upper Frame Rear Pin, pounds	Vertical Load on Upper Frame Rear Pin, tons
488								
489	0	47,084	(23,061)	(47,084)	(299,471)	511,874	(181,677)	(90.84)
490	-5	51,012	(22,722)	(51,012)	(299,811)	516,834	(186,637)	(93.32)
491	-10	54,144	(21,826)	(54,144)	(300,707)	521,272	(191,075)	(95.54)
492	-15	56,593	(20,528)	(56,593)	(302,005)	525,208	(195,010)	(97.51)
493	-20	58,442	(18,946)	(58,442)	(303,586)	528,645	(198,448)	(99.22)
494	-25	59,753	(17,178)	(59,753)	(305,355)	531,583	(201,386)	(100.69)
495	-30	60,573	(15,304)	(60,573)	(307,229)	534,018	(203,821)	(101.91)
496	-35	60,944	(13,393)	(60,944)	(309,140)	535,945	(205,748)	(102.87)
497	-40	60,903	(11,510)	(60,903)	(311,023)	537,356	(207,159)	(103.58)
498	-45	60,482	(9,715)	(60,482)	(312,818)	538,246	(208,049)	(104.02)
499	-50	59,717	(8,069)	(59,717)	(314,464)	538,608	(208,411)	(104.21)
500	-55	58,640	(6,632)	(58,640)	(315,901)	538,436	(208,239)	(104.12)
501	-60	57,291	(5,473)	(57,291)	(317,060)	537,723	(207,525)	(103.76)
502	-65	55,712	(4,671)	(55,712)	(317,861)	536,456	(206,259)	(103.13)
503	-70	53,953	(4,331)	(53,953)	(318,201)	534,618	(204,421)	(102.21)
504	-75	52,083	(4,600)	(52,083)	(317,933)	532,174	(201,977)	(100.99)
505	-80	50,196	(5,709)	(50,196)	(316,824)	529,058	(198,861)	(99.43)
506	-85	48,447	(8,076)	(48,447)	(314,457)	525,131	(194,934)	(97.47)
507	-90	47,136	(12,570)	(47,136)	(309,963)	520,077	(189,880)	(94.94)
508								
509	Horizontal Load on Stationary Cylinder Pivot is calculated by multiplying the cylinder axial load (cells in column B in above table 4) by the COSINE of cylinder angle η in column F Table 1 above							
510	Vertical Load on Stationary Cylinder Pivot is calculated by multiplying the cylinder axial load (cells in column B in above table 4) by the SIN of cylinder angle η in column F Table 1 above							
511	Horizontal Load on the table pivot is calculated by suming the forces in the horizontal direction and setting equal to zero, then solving for this value							
512	Vertical Load on the table pivot is calculated by suming the forces in the vertical direction (including table, pallet and block weights) and setting equal to zero, then solving for this value							
513	Forward Pin Vertical Load is calculated by summing the moments about the rear pin.							
514	Rear Pin Vertical Load is calculated by summing the forces in the vertical direction for the reactions on the main pivot pin and the forward pin and adding the load calculated in cell B456 for the upper frame self weight. A negative value represents a pin load restraining uplift.							

	A	B	C	D	E	F	G	H
515								
516	**TABLE 6, Cylinder Pressure, assumes two cylinders sharing the total load and load from Table + Pallet + Block (T + P + B):**							
517								
518	Table angle relative to horizontal, rho ρ, in degrees	Number of cylinder Stages extended	individual cylinder load, to counter act moment for T+P+B	Area of smallest stage	Pivot Cylinder System Pressure for T + P + B	individual cylinder load, to counter act moment for T+P	Pivot Cylinder System Pressure for T + P	
519			kips	sq. inches	psi	kips		
520	2	4.00	50.8	55.09	921	91.7	1665	
521	0	3.94	52.4	55.09	952	87.9	1596	
522	-5	3.77	55.8	55.09	1014	79.4	1441	
523	-10	3.59	58.4	55.09	1060	71.8	1304	
524	-15	3.41	60.2	55.09	1093	65.1	1181	
525	-20	3.22	61.4	55.09	1115	58.9	1069	
526	-25	3.02	62.2	55.09	1129	53.2	965	
527	-30	2.81	62.5	78.54	795	47.8	609	
528	-35	2.60	62.4	78.54	794	42.8	544	
529	-40	2.38	62.0	78.54	789	38.0	484	
530	-45	2.15	61.3	78.54	780	33.4	426	
531	-50	1.92	60.3	103.87	580	29.1	280	
532	-55	1.69	59.0	103.87	568	24.9	240	
533	-60	1.45	57.6	103.87	554	20.9	201	
534	-65	1.21	55.9	103.87	538	17.1	164	
535	-70	0.96	54.1	137.89	393	13.4	97	
536	-75	0.72	52.3	137.89	379	9.8	71	
537	-80	0.48	50.5	137.89	366	6.4	46	
538	-85	0.25	49.1	137.89	356	3.0	22	
539	-90	0.03	48.8	137.89	354	-0.4	-3	
540								
541								
542								

	A	B	C	D	E	F	G	H
543								
544	**Section 9); LOWER FRAME TO UPPER FRAME REAR PIN GEOMETRY to BLOCK, TABLE AND Pallet Center of Gravities**							
545								
546	Horizontal Dimensions:							
547	Distance from pivot to rear pin:	240	inches	from dwg 486361				
548	Distance from Upper Frame Rear pin to Front Pin	174	inches	from dwg 486361 and is the difference of 240"- 66"				
549	Distance from Upper Frame Rear pin to Upper Frame C.G	137.2359	inches					
550	Distance from Upper Frame Rear pin to Table C.G.	295.000	inches					
551	Distance from Upper Frame Rear pin to Pallet C.G.	537.000	inches					
552	Distance from Upper Frame Rear pin to Block C.G.	224.000	inches					
553								
554	Vertical Dimensions:							
555	Distance from pivot to rear pin:	240	inches	from dwg 486361				
556	Distance from Upper Frame Rear pin to Front Pin	0	inches					
557	Distance from Upper Frame Rear pin to Upper frame C.G	100.6872	inches					
558	Distance from Upper Frame Rear pin to Table C.G.	234.800	inches					
559	Distance from Upper Frame Rear pin to Pallet C.G.	288.675	inches					
560	Distance from Upper Frame Rear pin to Block C.G.	288.675	inches					
561								
562	Weight of Upper Frame	36,274	pounds					
563	Weight of Table	204,000	pounds					
564	Weight of Pallet	18,600	pounds					
565	Weight of Block	422,466	pounds					
566								
567								

	A	B	C	D	E	F	G	H
568								
569	**Section 10; LOADS on PINS ATTACHED to the UPPER FRAME (Table Pivot Pin, Rear Pin, Forward Pin):**							
570								
571	Moments about rear pin due to:							
572	Upper Frame	4,978,095	in-lbs	Moment = horizontal distance from pin to c.g. * the Upper Frame weight				
573	Table	60,180,000	in-lbs	Moment = horizontal distance from pin to c.g. * the Table weight				
574	Pallet	9,988,200	in-lbs	Moment = horizontal distance from pin to c.g. * the Pallet weight				
575	Block	94,632,334	in-lbs	Moment = horizontal distance from pin to c.g. * the Block weight				
576								
577	Reaction on Upper Frame Forward Pin:	975,739	pounds	Calculated by summing the above moments about the rear pin and dividing by the rear pin to fromnt pin horizontal distance				
578	Reaction on Upper Frame Forward Pin:	487.87	tons	divides cell above by 2000 to convert to tons				
579	Load on each Kneeling Cylinder Jack (4)	243,935	pounds	divides forward pin reaction by 4 jacks to show the load per jack				
580								
581	Maximum Load on the Table Pivot Pin, pounds	645,066	pounds					
582	Number of Table Pivot Shear planes	4						
583	Table Pivot Pin Diameter, inches	4	inches					
584	**Table Pivot Pin shear stress, psi**	**12,833**	**psi**					
585								
586	Maximum Load on the Upper Frame Forward Pin, pounds	538,608	pounds					
587	Number of Upper Frame Forward Pin Shear planes	8						
588	Upper Frame Forward Pin Diameter, inches	4	inches					
589	**Upper Frame Forward Pin shear stress, psi**	**5,358**	**psi**					
590								
591	Maximum Load on the Upper Frame Rearward Pin, pounds	208,411	pounds					
592	Number of Upper Frame Rearward Pin Shear planes	8						
593	Upper Frame Rearward Pin Diameter, inches	4	inches					
594	**Upper Frame Rearward Pin shear stress, psi**	**2,073**	**psi**					
595								
596	Pin Material (applicable to all three pins; table pivot, rear and forward)	ANSI 4140, Qu	Bar, Steel, ANSI 4140 turned, precision ground and polished round material, 4.00 inch outside diameter by					
597	Yield Stress	105,000	psi	See image of certificate of analysis above				
598	Ultimate Stress	125,000	psi					
599	Allowable Shear Stress	42,000	psi					
600								
601								
602								
603	**Rear Pin Gusset Shear and Tension Stress:**			A complete analysis is in engineering note 323.				
604	Number of Rear Pin Gusset Planes	12						
605	Rear Pin Gusset thickness	1	inches					
606	Rear Pin Gusset Width:	12	inches					
607	Upper Frame Rearward Pin Diameter, inches	4	inches					
608	Rear Pin Gusset Tension Area	96	square inches					
609	Rear Pin Gusset Tension Stress	2,171	psi	Tensile stress, sigma = P / A = load in cell b591 / cell b608				
610	Rear Pin Gusset distance from edge of gusset to edge of hole	2	inches					
611	Rear Pin Gusset Shear Area	48	square inches					
612	Rear Pin Gusset Shear Stress	4,342	psi					
613								
614								

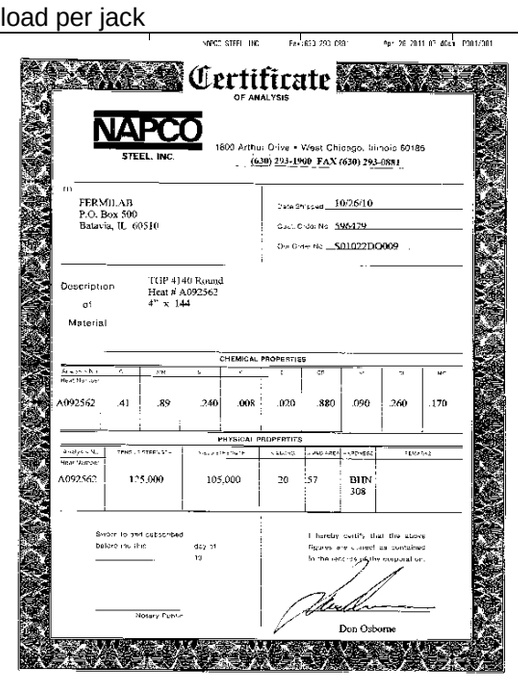

Certificate
OF ANALYSIS

NAPCO
STEEL, INC.

1800 Arthur Drive • West Chicago, Illinois 60185
(630) 293-1900 FAX (630) 293-0881

FERMILAB
P.O. Box 500
Batavia, IL 60510

Date Shipped 10/26/10
Cust. Order No 596129
Our Order No S01022DO009

Description of Material: TGP 4140 Round, Heat # A092562, 4" x 144

CHEMICAL PROPERTIES

Heat Number	C	Mn	P	S	Si	Cr	Ni	Mo	Cu
A092562	.41	.89	.240	.008	.020	.880	.090	.260	.170

PHYSICAL PROPERTIES

Heat Number	Tensile Strength	Yield Strength	Elongation	Reduction of Area	Hardness	Remarks
A092562	125,000	105,000	20	57	BHN 308	

Sworn to and subscribed before me this day of 19

Notary Public

I hereby certify that the above figures are correct as contained in the records of the company.

Don Osborne

	A	B	C	D	E	F	G	H
615								
616	**Section 11; LOWER FRAME Beam Loading**							
617	**Maximum Loads on Lower Frame and Resulting Bending Moments:**							
618								
619	Load at the forward upper frame pin	538,608	pounds	269.30	tons			
620	Load at the rearward upper frame pin	(208,411)	pounds	positive value indicates a load in the downward direction				
621	Distance between upper frame connection points	174	inches	negative value indicated an up-lift … force in the upward direction				
622	Distance from point "A" to Forward Pin	152	inches					
623	Distance from point "A" to center of forward Hilman roller	17	inches	Location of R1				
624	Distance from point "A" to Kneeling cylinder centerline	152	inches	Location of R2 and load at the forward upper frame pin				
625	Distance from point "A" to centerline of hydraulic drive wheels	160	inches	Location of the drive wheel				
626	Distance from point "A" to centerline of rear pin	326	inches	Location of the load at the rearward upper frame pin				
627	Distance from point "A" to centerline of counterweight #1	326	inches	Location of the centerline of counterweight weldment 1				
628	Distance from point "A" to centerline of counterweight #2	354.5	inches	Location of the centerline of counterweight weldment 2				
629	Distance from point "A" to centerline of counterweight #3	383	inches	Location of the centerline of counterweight weldment 3				
630	Distance from point "A" to centerline of counterweight #4	409	inches	counterweight # 4 is the pumping units				
631	Distance from point "A" to centerline of rear Hilman roller	415	inches	location of R4				
632	Length of the 300 ton Hilman rollers	34	inches					
633	Set dimensions to sum moments about the center of the forward Hilman roller (not point "A") to make the math easy:							
634	Sketch 7 dimension "a", inches	0		this is to the forward Hilman roller center				
635	Sketch 7 dimension "b", inches	135.0	inches	this is to the forward pin and the 2nd Hilman roller				
636	Sketch 7 dimension "c", inches	143.0	inches	this is to the hydraulic drive wheel centerline				
637	Sketch 7 dimension "d", inches	309.0	inches	this is to the rear pin				
638	Sketch 7 dimension "e", inches	309.0	inches	this is to the counterweight weldment 1 centerline				
639	Sketch 7 dimension "f", inches	337.5	inches	this is to the counterweight weldment 2 centerline				
640	Sketch 7 dimension "g", inches	366.0	inches	this is to the counterweight weldment 3 centerline				
641	Sketch 7 dimension "h", inches	392.0	inches	this is to the counterweight 4 (hydraulic units) centerline				
642	Sketch 7 dimension "j", inches	398.0	inches	this is to the rear Hilman roller centerline				
643								
644	Load on Forward Hilman roller (@ pt a), R1		pounds	equals reaction R1 from below				
645	Load on center Hilman roller (@ pt b), R2	538,608	pounds					
646	Load on Drive wheels (at pt c), R3	63,400	pounds	Set at 2 x the maximum air spring load				
647	Load from Rear pin (at pt d)	(208,411)	pounds					
648	Load from counterweight 1	50,000	pounds	Could be up to 56,000 pounds				
649	Load from counterweight 2	50,000	pounds	Could be up to 56,000 pounds				
650	Load from counterweight 3	50,000	pounds	Could be up to 56,000 pounds				
651	Load from counterweight 4	3,000	pounds	Load from Hydraulic units				

	A	B	C	D	E	F	G	H
652	Reaction R4	0	pounds	Set equal to zero and assumes the lower frame is lifting the rear hilman roller off the track				
653	Reaction R3	63,400	pounds	Set equal to cell B636				
654	Reaction R2	360,526	pounds	Calculated by summing the moments about "a" - Refer to sketch 7				
655	Reaction R1	59,272	pounds	Calculated by summing the forces in the vertical direction.				
656								
657	Shear R1 to R2	59,272	pounds					
658	Shear R2 o Pfp	419,797	pounds					
659	Shear Pfp to R3	(118,811)	pounds					
660	Shear R3 to Prp	(55,411)	pounds					
661								
662	Moment at R1	0	in-lbs					
663	Moment at R2	8,001,667	in-lbs					
664	Moment at Pfp	15,138,219	in-lbs					
665	Moment at R3	16,207,515	in-lbs					
666	Moment at Prp	0	in-lbs					
667								
668	Allowable Stress for the Lower frame based on AISC 9th edition requirements (0.6Fy) and a material with a 36 ksi yield stress	21,600	psi					
669	Required Section Modulus, S R1 to R2	370	in^3					
670	Required Section Modulus, S R2 to Pfp	701	in^3					
671	Required Section Modulus, S Pfp to R3	701	in^3					
672	Required Section Modulus, S R3 to Prp	750	in^3					
673								
674	Assume value of 'y' is:	9.80	inches	assumes the neutral axisis near the center of the section				
675								
676	Required Moment of Inertia, I R1 to R2	3,630	in^4	S = I/y ; I = S * y				
677	Required Moment of Inertia, I R2 to Pfp	6,868	in^4					
678	Required Moment of Inertia, I Pfp to R3	6,868	in^4					
679	Required Moment of Inertia, I R3 to Prp	7,353	in^4					
680								

SKETCH 7 · LOWER FRAME 4-29-2011 DAVE PUSHKA

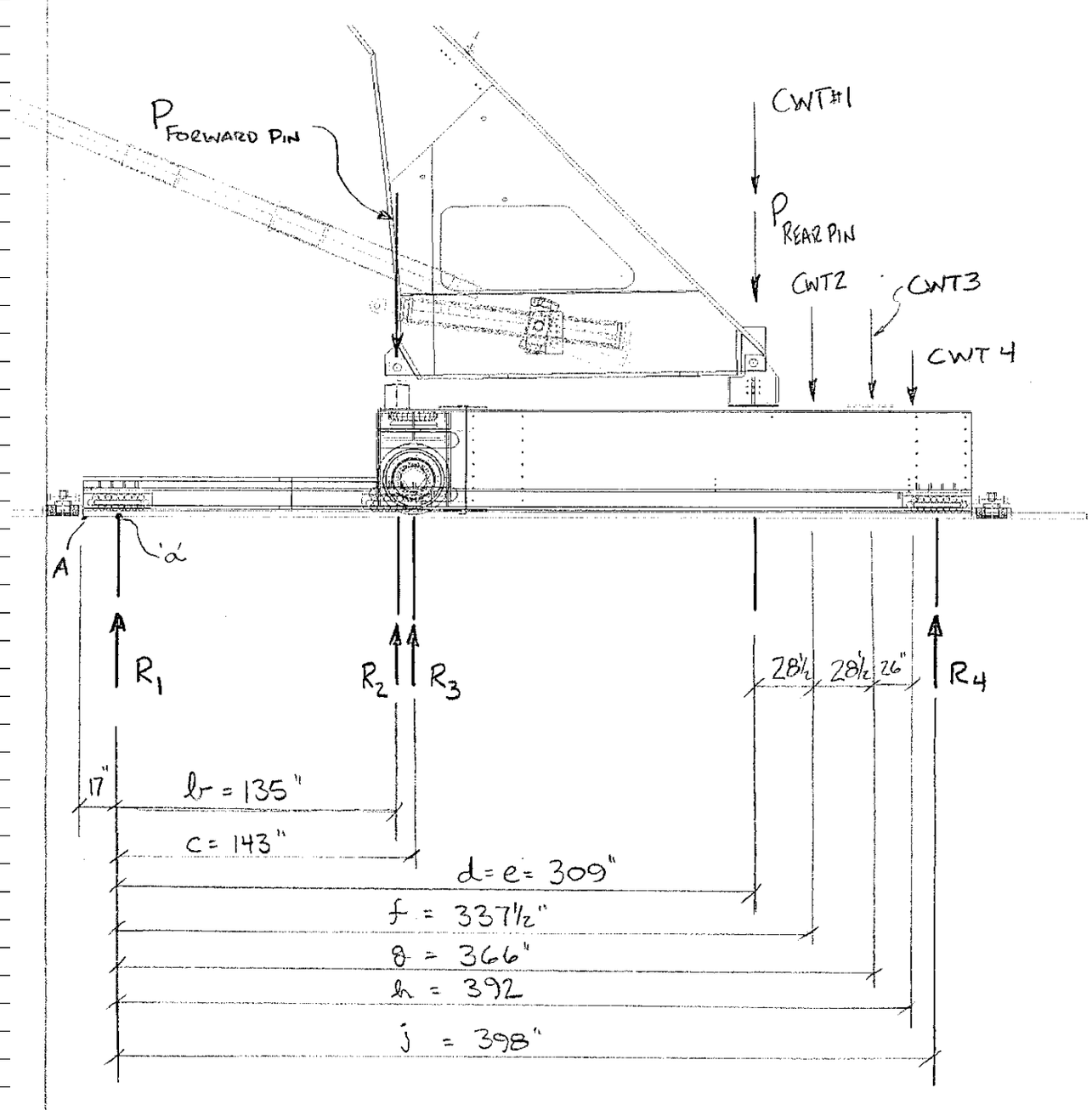

$$\sum M_a = 0 = b \cdot R_2 + c \cdot R_3 + j \cdot \cancel{R_4} - \left(b \cdot P_{F.P.} + d \cdot P_{R.P} + e \cdot CWT1 + f \cdot CWT2 + g \cdot CWT3 + h \cdot CWT4\right)$$

$$b \cdot R_2 = -cR_3 + bP_{F.P.} + dP_{RP} + e \cdot CWT1 + f \cdot CWT2 + g \cdot CWT3 + h \cdot CWT4$$

$$R_2 = \frac{-c \cdot R_3 + b \cdot P_{F.P.} + d \cdot P_{R.P} + e \cdot CWT1 + f \cdot CWT2 + g \cdot CWT3 + h \cdot CWT4}{b}$$

	A	B	C	D	E	F	G	H
740								
741	**Section 12a ; Moment of Inertia of the Front Portion of the Lower Weldment (the area between R1 and R2) Calculated by hand**							
742	Top Plate, Area 1	64	square inches					
743	Distance 1	15	inches					
744	Bottom Plates, Area 2	28	square inches					
745	Distance 2	1	inches					
746	Webs, area 3	48	square inches					
747	Distance 3	8	inches					
748	Mid Plate, area 4	18	square inches					
749	Distance 4	10	inches					
750	Total Area	158	square inches					
751								
752	location of the n.a. above the bottom of the bottom flange, y bar							
753	y bar = Sum(A*d)/Sum(A)	9.82	inches					
754								
755	Calculate the distance from the N.A. to the c.g. of each area:							
756	Area 1: Distance 1 - y bar	5.18						
757	Area 2: Distance 2 - y bar	-8.82						
758	Area 3: Distance 3 - y bar	-1.82						
759	Area 4: Distance 4 - y bar	0.18						
760								
761	I of Area 1	21.3	in^4					
762	I of Area 2	9.3	in^4					
763	I of Area 3	576.0	in^4					
764	I of Area 4	1.5	in^4					
765								
766	Sum (I + A*d^2) for Area 1	1736.76	in^4					
767	Sum (I + A*d^2) for Area 2	2188.90	in^4					
768	Sum (I + A*d^2) for Area 3	735.48	in^4					
769	Sum (I + A*d^2) for Area 4	2.07	in^4					
770								
771	Sum of Above (I + A*d^2)	4663.20	in^4					
772								
773	Available Moment of Inertia of the forward portion of the lower frame exceeds the required moment of Inertia to keep the bending stresses below the AISC allowable for bending.							

Section 12b; Result of Ideas Beam Properties Calculation of the moment of Inertia for the forward portion of the lower frame.

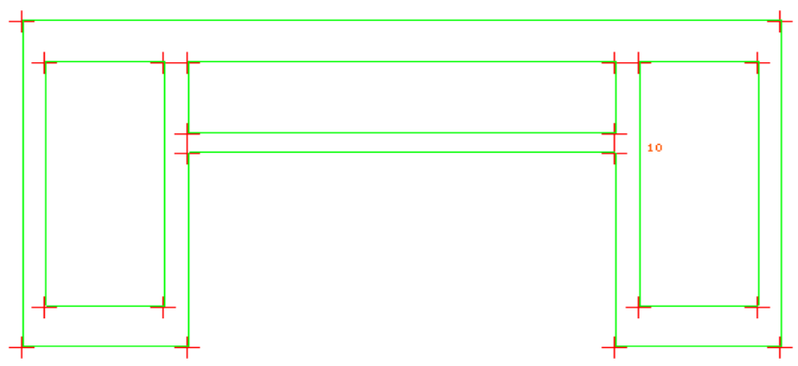


```
Area                        :   158.0
Prin. moment of inertia Y   :   18372.67
Prin. moment of inertia Z   :   4663.207
Shear ratio Y               :   2.798
Shear ratio Z               :   2.281
Torsional constant          :   3483.96
Warping constant            :   526531.1
Warping restraint factor    :   0.0
Eccentricity Y              :  -7.392914
Eccentricity Z              :   0.0

X centroid location         : -7.657376E-15
Y centroid location         : -1.326184E-06
X shear center location     : -3.373835E-06
Y shear center location     :  7.392913
```

```
Is this mesh OK (Yes)
Y

Enter background color name or no. (0-BLACK)
15

Enter background color name or no. (15-WHITE)
0

Enter background color name or no. (0-BLACK)
15
```

	A	B	C	D	E	F	G	H
812								
813								
814	**Section 13; Rear Pin Support Bracket Bolt Sizing**							
815	Maximum tension load on Rear Pin Brackets	208,411	pounds	absolute value of the largest magnitude in column G				
816	Number of rear pin brackets	1.00		two upper support frames are used				
817	Maximum tesion load on one rear pin bracket	208,411		total load divided by the number of brackets (2)				
818	Number of tension bolts on each bracket	16.00		from drawing				
819	Size of tension bolts on each bracket	0.75	inch diameter	from drawing				
820	Grade of tension bolts on each bracket	A325						
821	Allowable tension load per A325 bolt per AISC 9th ed.	19.40	kips	From AISC 9th edition, Table I-A in chapter 4, page 4-3				
822	Tensile capactity of all bolts	310,400	pounds	number of bolts times the allowable load per bolt per AISC				
823	Percent of actual load over allowable load	67%		calculation made to quantify what fraction of the allowable is used.				
824	Allowable tension load per A307 bolt per AISC 9th	8.80	kips	From AISC 9th edition, Table I-A in chapter 4, page 4-3				
825	Number of A307 bolts needed	23.68		calculation made to consider the potential use of suspect or counterfit bolts				
826								
827	**Section 14; Rear Pin Support Bracket Weld Sizing**							
828	Weld Filler Material Yield Stress, psi	60,000	psi	assumes low strength filler metal, 70 ksi material				
829	Partial Penetration Groove Weld Size, inches	0.50	inches	assumed minimum size				
830	Maximum tension load on Rear Pin Brackets	208,411	pounds	absolute value of the largest magnitude in column G of table 5				
831	Required Length of Weld, inches	32.75	inches	Calculated using formulas in AISC 9th edition, volume 2, connections.				
832	Length of weld where pin plates attach to bolt plates	192.00	inches	exceeds required weld length, therefore satisfactory.				
833	Length of weld at bottom of 2 inch plate	161.50	inches	exceeds required weld length, therefore satisfactory.				
834	Length of weld at the top of the base plate	225.50	inches	exceeds required weld length, therefore satisfactory.				
835								
836								
837								
838								
839								

	A	B	C	D	E	F	G	H
840								
841	**Section 15; UPPER FRAME ROTATION due to KNEELING**							
842								
843	Distance from Upper Frame Rear pin to Front Pin	174	inches					
844	Distance from Upper Frame Front Pin to Pallet Hook	74	inches	sum of 66 inches + 8 inches.				
845	Distance from Upper Frame Rear Pin to pallet hook	248	inches					
846	Vertical Travel of Pallet to disengage hooks	3.5	inches					
847	Required Angular Rotation of Upper Frame, Kappa	0.0141	radians					
848	Required Angular Rotation of Upper Frame	0.809	degrees					
849								
850	Vertical Travel of Kneeling Cylinder to disengage hooks	2.46	inches					
851	Stroke of Kneeling Cylinders (as specified)	3.75	inches					
852	Maximum Angular Rotation of Upper Frame, Kappa	0.0215	radians					
853	Maximum Angular Rotation of Upper Frame, Kappa	1.235	degrees					
854								
855	Cosine of Kappa (maximum)	0.999767842						
856	Change of Length @ Kneeling Cylinder bttm (max)	0.0404	inches					
857	Cosine of Kappa (nominal)	0.999900428						
858	Change of Length @ Kneeling Cylinder bttm (max)	0.0173	inches					
859								
860	Length of Kneeling Cylinder (retracted)	14	inches					
861	Length of Kneeling Cylinder (extended)	17.75	in					
862	Rotation of Kneeling Cyl if horz disp = 0, Lambda	0.001	radians					
863	Rotation of Kneeling Cyl if horz disp = 0, Lambda	0.056	degrees					
864								
865								
866	**Section 16; Maximum Loads on Lower Frame Rollers and Drive Traction Required:**							
867								
868	Estimated Weight of Lower Frame, pounds	31,000	pounds	From drawing 466518				
869	Total Weight on Lower Frame Rollers, pounds	514,197	pounds					
870	Static Friction on Rollers	6%		Steel roller on steel rail static friction value.				
871	Conversion factor, kN to lb-f	0.004448222	kN per lb-f					
872	Conversion factor , lb-f to kN	224.81	lb-f per kN					
873	Conversion Factor, N-m to ft-lb-f	0.73756	N-m / lb-f * ft					
874	Minimum Tractive Force to exceed friction	30,852	pounds	Total Weight on Lower Frame time static friction				
875	Minimum Tractive Force to exceed friction	137	kN	Conversion from pounds force to kN				
876	Nominal Wheel Diameter, inches	36.0	inches					
877	Nominal Wheel Diameter, inches	0.91	meters					
878	Required Drive Torque, N-m	62,744	N-m	Tractive effort in N times drive wheel diameter divided by 2 drive w				
879	Required Drive Torque, ft-lbs	46,278	ft-lbs	Conversion from N-m to ft-lb-f using 0.73756 factor				
880	Drive Wheel Radial Load, pounds	63,400	pounds	Load on drive wheel from R3 above				
881	Drive Wheel Radial Load, kN	282.02	kN	Conversion to kN using factor 224.81 kN per pound factor				
882	Required Wheel to floor coefficient of friction	0.49		Tractive effort divided by the reaction R3 from above				
883	Anticipated wheel to floor coefficient of friction	0.60		Rubber to concrete friction.				
884	Drive wheel radial load for anticipated coef of friction	51,420		Since this value exceeds the maximum load provided by an airspring, this is the reason for moving to 4 drive wheels.				
885								
886	Wheel Radial Load, maximum	64,000	pounds	Based on above drive wheel radial load, rounded to a even number.				
887	Wheel Radial Load, maximum	284.69	kN	converted to kN				
888	Wheel Radial Load, nominal	52,000	pounds					
889	Wheel Radial Load, nominal	231.31	kN	converted to kN				
890								
891	**Axle Sizing**							
892	Required Drive Torque, N-m	62,744	N-m					
893	Required Drive Torque, ft-lbs	46,278	ft-lbs					
894	Required Drive Torque, in-lbs	555,333	in-lbs					
895	Axle Outside Diameter, in	6.75	inches					
896	Axle Inside Diameter, in	6.00	inches					
897	Shear Stress, psi	24,477	psi					
898								
899	BOLT Circle Diameter	24	inches					
900	Number of bolts	8						
901	bolt diameter	0.50	inches					
902	Bolt shear	5,785	pounds					
903	bolt area	0.1963	square inches					
904	Bolt Shear Stress	29,461	psi					

	A	B	C	D	E	F	G	H
905								
906								
907	**Section 17; Lateral Loads on the Ash River Block Pivoter**							
908	Consider when the block is horizontal							
909	Weight of Table	204,000	pounds		48.675	48.6751969		
910	Weight of pallet	18,600	pounds		48.675			
911	Weight of Complete 31 plane block	422,466	pounds		55.000			
912	Combined Table + 31 plane block weight	645,066	pounds					
913	Vertical Location of Combined C.G. value for Table, PVC Block and Pallet:	31.64	inches	For table horizontal, location of combined c.g. above pivot				
914	Assume Lateral Load percentage	5.00%						
915	Lateral Load due to 0.05 * W	32,253	pounds					
916								
917	**Component of Lateral Load in the 'Z' direction (parallel to the beam, perpendicular to the table rotation axis)**							
918								
919	Because c.g. is above pivot, the cylinder needs to apply additional load to prevent table rotation							
920	Pivot cylinder vertical force is:	4,906	pounds	Summed the moments around the pivot				
921	Pivot cylinder axial force is:	11,153	pounds					
922	Pivot cylinder horizontal force is:	10,016	pounds	Add this to the lateral load				
923								
924	Shear load on the pivot pins is the square of the sums of the square for the vertical and horizontal forces:	655,875	pounds	Combined vertical load and horizontal load which is the square root of the sum of the squares (horizontal load due to the 5% and the vertical load due to weight)				
925	Number of shear planes	4						
926	Pivot Pin Diameter	4	inches					
927	Area of each shear plane	12.57	inches					
928	Total Shear Area (# planes * area per plane)	50.27	inches					
929	Shear Stress on main pivot pin for the above shear load.	13,048	psi					
930								
931	Shear Pin Material:	4140	Bar, Steel, ANSI 4140 turned, precision ground and polished round material, 4.00 inch outside diameter by					
932	Shear Pin Material Yield Stress:	105,000	psi					
933								
934	Allowable Shear Stress per AISC 9th, = 0.4*Fy	42,000	psi					
935	Allowable shear stress exceeds actual yield stess, therefore this pin sizing and material choice is satisfactory							
936								
937	**Component of Lateral Load in the 'X' direction (perpendicular to the beam, parallel to the table rotation axis)**							
938	This Lateral load is resisted by a couple from the two upper vertical supports.							
939	Lateral Load due to 0.05 * W	32,253	pounds					
940	Thickness of detector block	2053.6	mm	copied from cell B8				
941	Thickness of detector block	80.85	inches					
942	Vertical Distance from pivot to table c.g when table is horizontal	-5.200	inches	copied from cell B33				
943								
944	Vertical Distance of Lateral Load Above Pivot centerline	31.64	inches	sum of the c.g's * distance wrt pivot / sum c.g's				
945	Sum the moments about the point (a) where the left vertical support intersects the pin centerline and set equal to zero to find the reaction from the right vertical support.							
946	ΣMa = 0 = 64047*26.48 +310*R2			310 is the distance between supports				
947	R2 =	3,292	pounds					
948	Shear stress per shear plane for normal vertical table load (assumes no cylinder contribution to supporting the table)	12,833	psi					
949	Shear stress for one main pin shear plane taking all of R2	261.94	psi					
950	Sum of above two shear stresses	13,095	psi					
951	Allowable Shear Stress per AISC 9th, = 0.4*Fy	42,000	psi					
952	Allowable shear stress exceeds actual yield stess, therefore this pin sizing and material choice is satisfactory. Note the lateral load in the 'X' direction adds a 1100 pound additional shear load to the main pivot pin. This is negligible compared to the nominal load on the pin.							
953								

SKETCH 8 | 4-29-2011 | DAVE PUSHKA

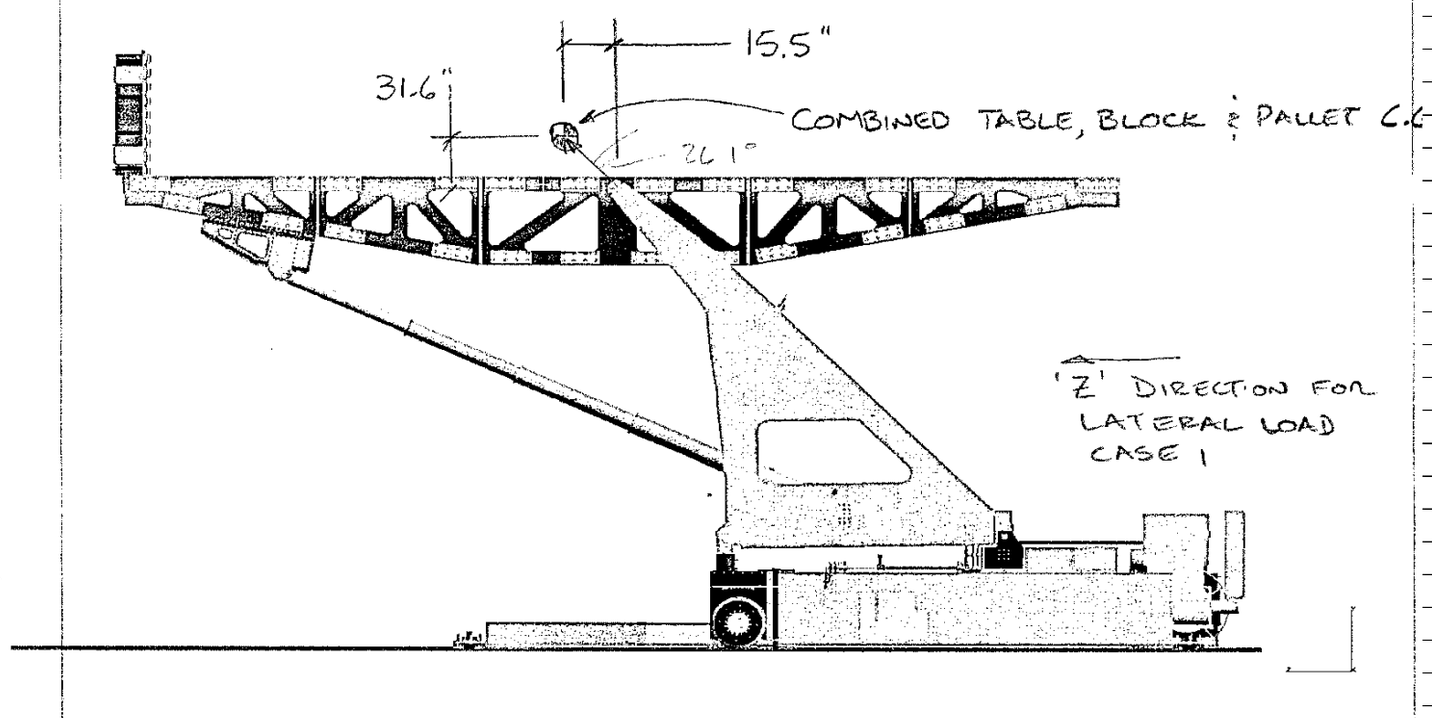

$R = (15\tfrac{1}{2}^2 + 31.6^2)^{1/2} = 35.19''$

'X' DIRECTION IS
INTO THE PAGE FOR
LATERAL LOAD CASE 2.

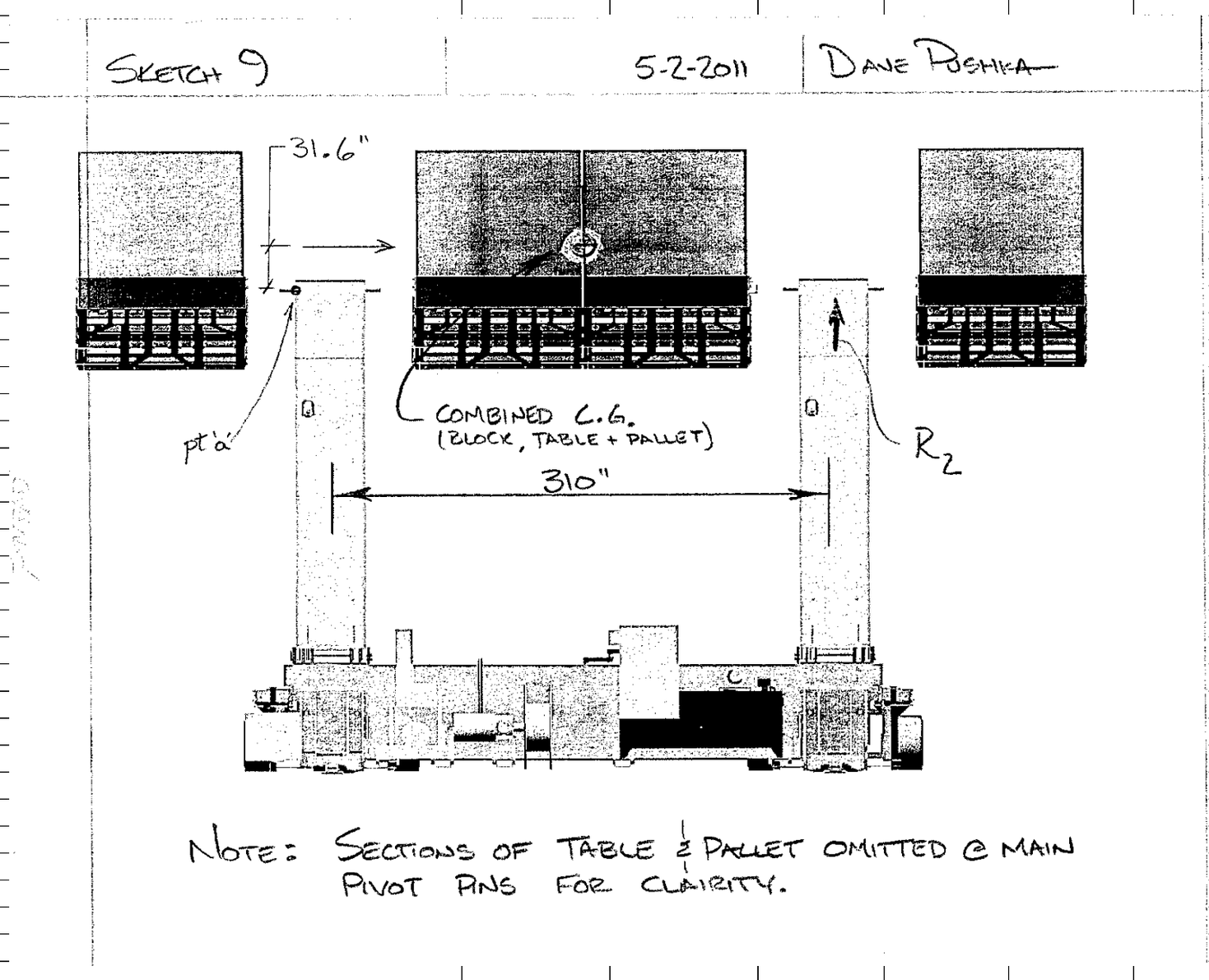
SKETCH 9
5-2-2011
DAVE PUSHKA
31.6"
pt 'a'
COMBINED C.G.
(BLOCK, TABLE + PALLET)
310"
R_2
NOTE: SECTIONS OF TABLE & PALLET OMITTED @ MAIN PIVOT PINS FOR CLARITY.