Fermilab

Particle Physics Division
Mechanical Department Engineering Note

Number: MD-ENG-299 Date: 28 December 2010

Project Internal Reference: 485-1.02.04.01

Project: Microboone

Title: Mircoboone Pump Skid Assembly Pricing

Author(s): Mike Zuckerbrot

Reviewer(s):

Key Words: Microboone, Pump skid

Applicable Codes:

Abstract Summary: This note reviews part and labor costs for assembling the Microboone pump skid in house at Fermilab opposed to having it outsourced. The pricing does not include the pump assembly as it was not quoted with the outside quotes; it will be furnished separately by the lab. This cost analysis does not include any contingency.

Table of Contents

I. Pdf drawings

II. Pump skid frame parts pricing (dwg 483016)

III. Pump vessel body parts pricing (dwg 466882)

IV. Pump top flange parts pricing (dwg 486011)

V. Pump skid parts pricing (dwg 466838)

VI. In house labor costs

VII. Total in house assembly pricing

VIII. Outside quotes for full assembly

IX. Conclusions

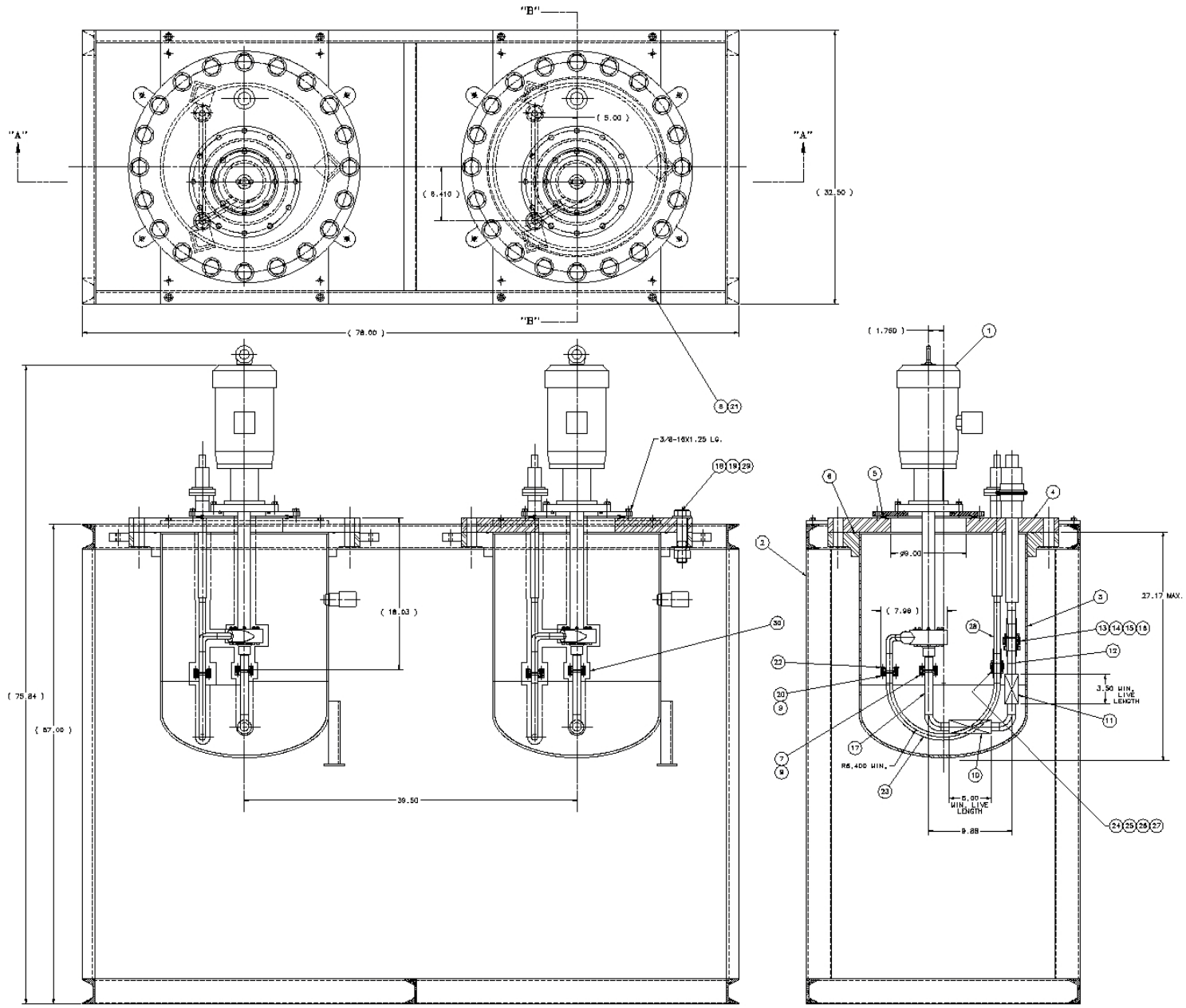

SECTION "A-A"

SECTION "B-B"

REV	DESCRIPTION	DRAWN / APPROVED	DATE / DATE

ITEM	PART NO.	DESCRIPTION OR SIZE	QTY.
30	COML.	20 LAYERS OF INSULATION	AS REQ'D.
29	COML.	WASHER, LOCK, 1 1/8	40
28	COML.	TUBING, 3/4" O.D. X .035 WALL X REQUIRED LENGTH	2
27	COML.	FITTING, NUT, WELD, VCR #03-12-VCR-4 OR EQUIVALENT	2
26	COML.	FITTING, NUT, FERULE, VCR #03-12-VCR-1 OR EQUIVALENT	2
25	COML.	GASKET, VCR #03-12-VCR-2 OR EQUIVALENT	2
24	COML.	FITTING, GLAND, VCR #03-12-VCR-3 OR EQUIVALENT	4
23	COML.	TUBE, 1.00" O.D. X .035 WALL X 2.00" LG. STAINLESS STEEL.	2
22	COML.	SCREW, HEX. HD. CAP, 3/8-16UNC-3A X 1.25 LG. STAINLESS STEEL	16
21	COML.	WASHER, FLAT, 3/8	8
20	COML.	FLANGE, VACUUM, 2.75" O.D., SUITABLE TO ACCEPT 2.1/2" O.D. TUBE, 8 EQ. SPACED HOLES ON 7.25 B.C., MOD. #10000 OR EQUIVALENT.	2
19	COML.	WASHER, FLAT, 1 1/8	80
18	COML.	SCREW, HEX. HD. CAP, 1 1/8-7UNC-3A X 8.00 LG.	40
17	COML.	TUBE, 1.00" O.D. X .035 WALL X AS REQ'D. LG., STAINLESS STEEL.	2
16	COML.	FITTING, NUT, WELD, VCR #03-12-VCR-4 OR EQUIVALENT	2
15	COML.	FITTING, NUT, FERULE, VCR #03-12-VCR-1 OR EQUIVALENT	2
14	COML.	GASKET, VCR #03-12-VCR-2 OR EQUIVALENT	2
13	COML.	FITTING, GLAND, VCR #03-12-VCR-3 OR EQUIVALENT	4
12	COML.	FILTER, TYPE 316 SS, 5 MICRON, 2 SPT. "MASTER-GUARD" GASKET OR EQUIVALENT.	2
11	COML.	TUBE, 1.00" O.D. X .035 WALL X AS REQ'D. LTH. LENGTH, SINGLE WELD, SEAM WELDED TUBE.	2
10	COML.	TUBE, 1.00" O.D. X .035 WALL X AS REQ'D. LTH. LENGTH, SINGLE WELD, SEAM WELDED TUBE. OR EQUIVALENT.	2
9	COML.	GASKET, COPPER, MOD REF.306-100 OR EQUIVALENT	4
8	COML.	SCREW, HEX. HD., CAP 3/8-16UNC-3A X 1.00 LG.	8
7	COML.	FLANGE, VACUUM, 2.75 O.D., SUITABLE TO ACCEPT 2.1/2" O.D. TUBE, 8 EQ. SPACED HOLES ON 7.25 B.C. MOD #10000 OR EQUIVALENT.	2
6	COML.	O-RING PARKER P/N 2-170 OR EQUIV.	2
5	COML.	CENTERLINE RING ASSY., MOD P/N 813014 OR EQUIVALENT.	2
4	MD-468673	PUMP TOP FLANGE	2
3	MD-468670	PUMP VESSEL BODY	2
2	MC-468675	PUMP SKID FRAME	1
1	MC-468880	PUMP ASSEMBLY – PROVIDED BY F.N.A.L.	2

PARTS LIST

UNLESS OTHERWISE SPECIFIED	ORIGINATOR	B.SANDERS	01-APR-2010
	DRAWN	J.WATERKI	01-APR-2010
± ± ±	CHECKED	K.DAVIS	29-JUN-2010
1. BREAK ALL SHARP EDGES	APPROVED	J.R.FLIMER	29-JUN-2010
2. DO NOT SCALE DRAWING	USED ON		
3. DIMENSIONS BASED UPON			
4. DRY ICE BOILING	MATERIAL	SEE PARTS LIST ABOVE	
5. DRAWING UNITS:U.S.INCH			

FERMI NATIONAL ACCELERATOR LABORATORY
UNITED STATES DEPARTMENT OF ENERGY

E974-MICROBOONE – CRYOGENICS SUPPORT EQUIPMENT
MICROBOONE PUMP SKID

SCALE	DRAWING NUMBER	SHEET	REV
1:4	3974.220-ME-466838	1 OF 1	A

CREATED WITH : IntentionSerline GROUP: PROJ/MECHANICAL DEPARTMENT

REV	DESCRIPTION	DRAWN	DATE
		APPROVED	DATE

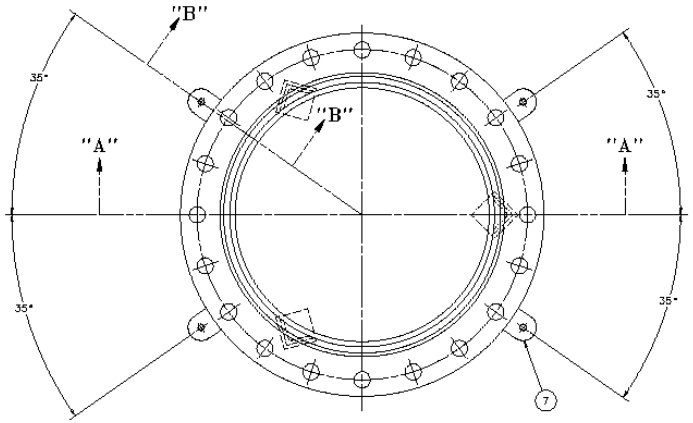

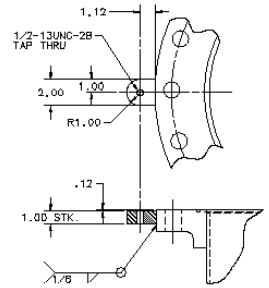

SECTION "B-B"
(LIFTING LUG 4 PLACES)

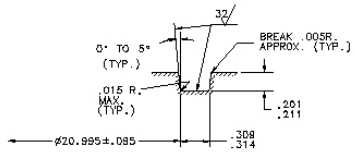

DETAIL "D"
(O-RING GROOVE)
(NOT TO SCALE)

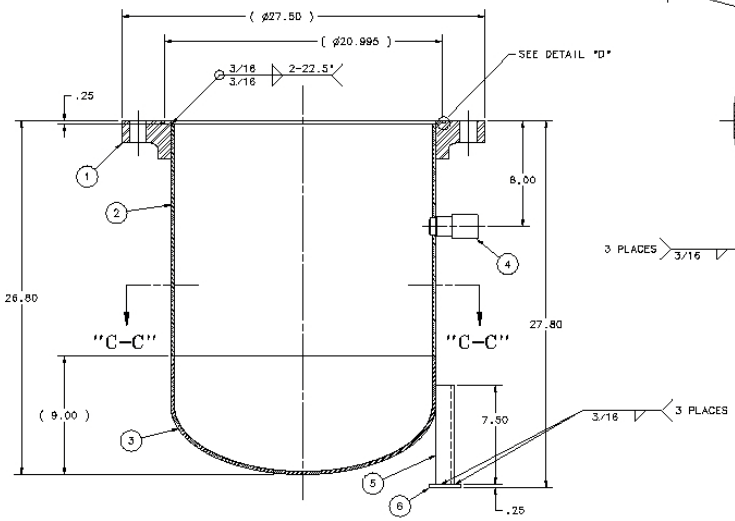

SECTION "A-A"

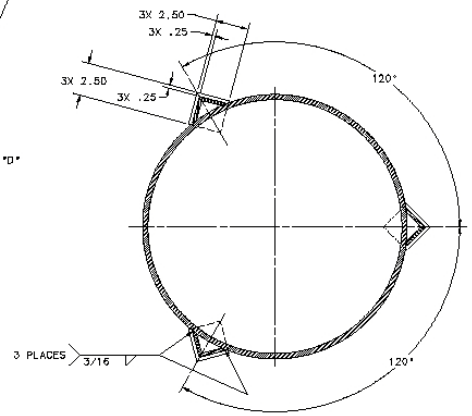

SECTION "C-C"

ITEM	PART NO.	DESCRIPTION OR SIZE	QTY.
7	COML.	BAR, 2.00 X 2.125 X 1.00 THK.	4
6	COML.	PLATE, 2.50 X 2.50 X.25 THK.	3
5	COML.	ANGLE, 2.00 X 2.00 X .25 THK.	3
4	COML.	VALVE, RELIEF, PHRX P/N VR-46 OR EQUIV.	1
3	COML.	PIPE CAP, 20 IPS	1
2	COML.	20 IPS SCH. 10	1
1	COML.	FLANGE, SLIP-ON, WELDING, 20 IPS, 150 POUND	1

PARTS LIST

UNLESS OTHERWISE SPECIFIED			ORIGINATOR	R.SANDERS	20-MAY-2010
.XX	.XXX	ANGLES	DRAWN	J.MATESKI	20-MAY-2010
± .06	± - - -	± 1°	CHECKED	W.CWZ	25-JUN-2010
			APPROVED	J.KILMER	25-JUN-2010

1. BREAK ALL SHARP EDGES .015 MAX.
2. DO NOT SCALE DRAWING.
3. DIMENSIONS BASED UPON ASME Y14.5M-1994
4. RAV. ALL MACH. SURFACES 250
5. DRAWING UNITS: U.S. INCH

USED ON: 3974.220-WE-466838

MATERIAL: SEE PARTS LIST ABOVE

FERMI NATIONAL ACCELERATOR LABORATORY
UNITED STATES DEPARTMENT OF ENERGY

E974-MICROBOONE - CRYOGENICS
SUPPORT EQUIPMENT
PUMP VESSEL BODY

SCALE	DRAWING NUMBER	SHEET	REV
1:4 ± NOTED	3974.220-MD-466970	1 OF 1	

CREATED WITH : Ideas12NXSeries | GROUP: PPD/MECHANICAL DEPARTMENT

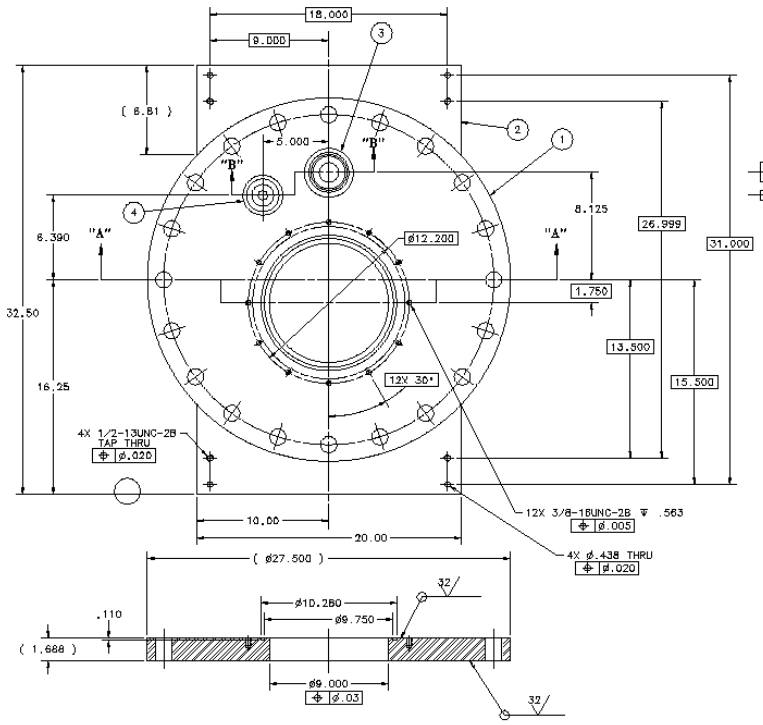

SECTION "A-A"

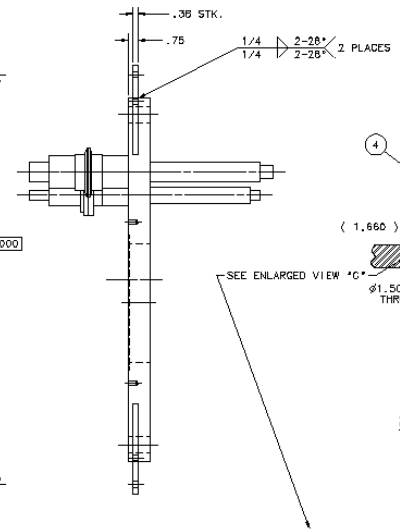

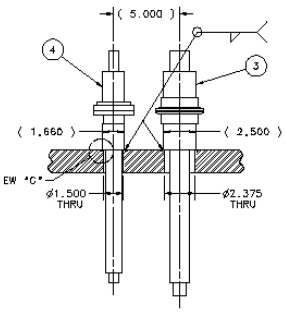

SECTION "B-B"

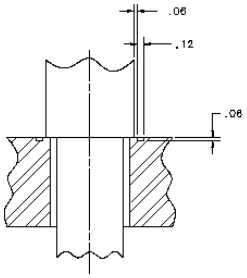

ENLARGED VIEW "C"
(TYP. WELD RELIEF)
FULL SCALE

REV	DESCRIPTION	DRAWN	DATE
		APPROVED	DATE

ITEM	PART NO.	DESCRIPTION OR SIZE	QTY.
4	COML.	COUPLING, PHPK P/N TBA-07 OR EQUIV.	1
3	COML.	COUPLING, PHPK P/N PBA-10 OR EQUIV.	1
2	COML.	PLATE, 7.00" W. X 30.00" LG. X 3/8" THK.	2
1	COML.	FLANGE, BLIND, 20 IPS, 150 POUND	1

PARTS LIST

UNLESS OTHERWISE SPECIFIED			ORIGINATOR	R.SANDERS	21-MAY-2010
.XX	.XXX	ANGLES	DRAWN	J.MATESKI	21-MAY-2010
± .030	± .008	± 1°	CHECKED	W.CHVO	25-JUN-2010
			APPROVED	J.KILMER	25-JUN-2010

1. BREAK ALL SHARP EDGES .015 MAX.
2. DO NOT SCALE DRAWING.
3. DIMENSIONS BASED UPON ASME Y14.5M-1994
4. MAX. ALL MACH. SURFACES 250 √
5. DRAWING UNITS: U.S. INCH

USED ON: 3974.220-ME-466838

MATERIAL: SEE PARTS LIST ABOVE

FERMI NATIONAL ACCELERATOR LABORATORY
UNITED STATES DEPARTMENT OF ENERGY

E974-MICROBOONE - CRYOGENICS
SUPPORT EQUIPMENT
PUMP TOP FLANGE

SCALE	DRAWING NUMBER	SHEET	REV
1:4 & NOTED	3974.220-MD-466973	1 OF 1	

CREATED WITH : Ideas12NXSeries | GROUP: PPD/MECHANICAL DEPARTMENT

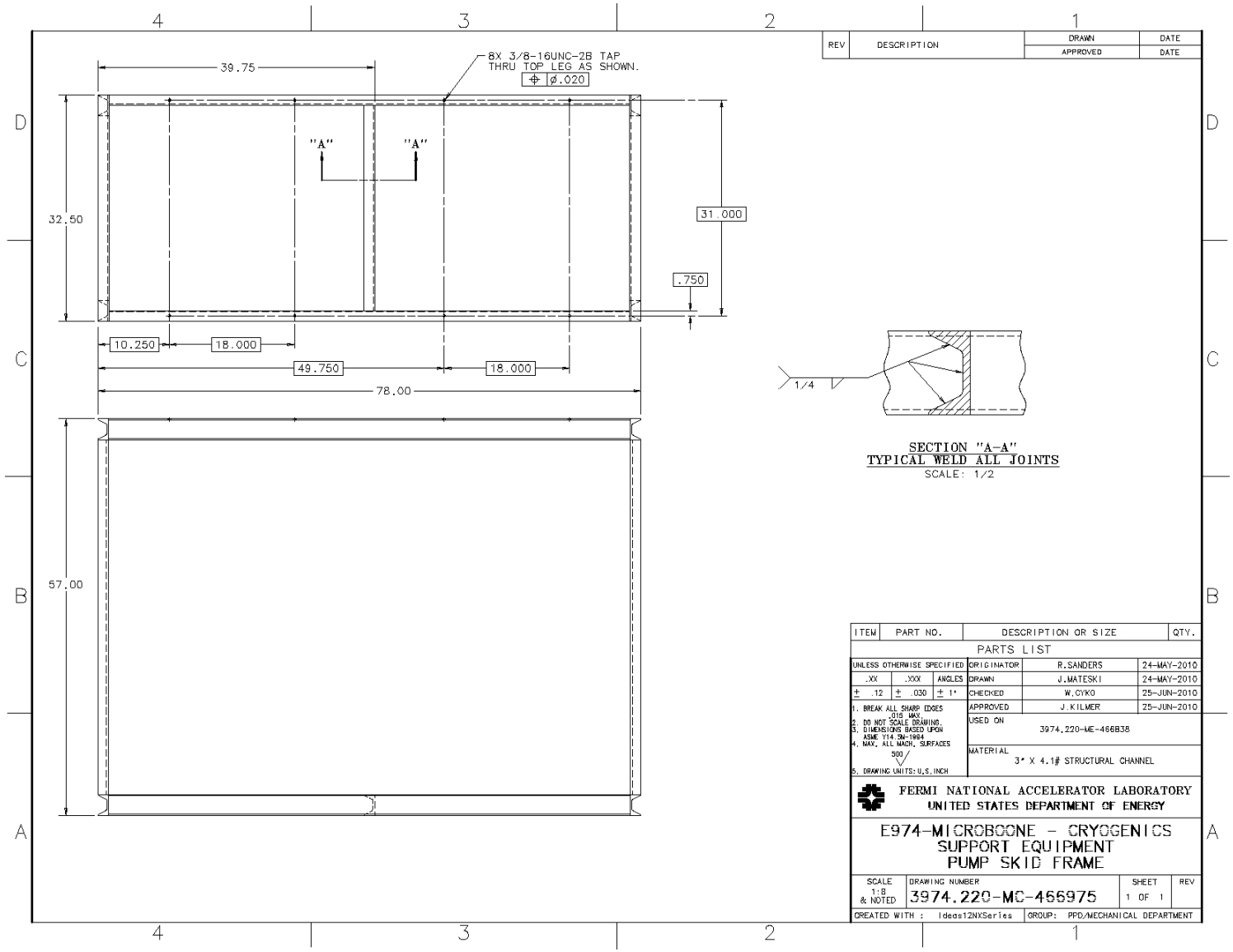
8X 3/8-16UNC-2B TAP
THRU TOP LEG AS SHOWN.
⌖ ø.020
39.75
"A"
"A"
32.50
31.000
.750
10.250
18.000
49.750
18.000
78.00
57.00
1/4
SECTION "A-A"
TYPICAL WELD ALL JOINTS
SCALE: 1/2
REV
DESCRIPTION
DRAWN
DATE
APPROVED
DATE
ITEM
PART NO.
DESCRIPTION OR SIZE
QTY.
PARTS LIST
UNLESS OTHERWISE SPECIFIED
.XX
.XXX
ANGLES
± .12
± .030
± 1°
1. BREAK ALL SHARP EDGES .015 MAX.
2. DO NOT SCALE DRAWING.
3. DIMENSIONS BASED UPON ASME Y14.5M-1994
4. MAX. ALL MACH. SURFACES 500
5. DRAWING UNITS: U.S. INCH
ORIGINATOR R.SANDERS 24-MAY-2010
DRAWN J.MATESKI 24-MAY-2010
CHECKED W.CYKO 25-JUN-2010
APPROVED J.KILMER 25-JUN-2010
USED ON 3974.220-ME-466838
MATERIAL 3" X 4.1# STRUCTURAL CHANNEL
FERMI NATIONAL ACCELERATOR LABORATORY
UNITED STATES DEPARTMENT OF ENERGY
E974-MICROBOONE - CRYOGENICS
SUPPORT EQUIPMENT
PUMP SKID FRAME
SCALE 1:8 & NOTED
DRAWING NUMBER 3974.220-MC-466975
SHEET 1 OF 1
REV
CREATED WITH : Ideas12NXSeries
GROUP: PPD/MECHANICAL DEPARTMENT

II. Pump skid frame parts pricing

The pump skid frame can be seen in drawing 466975. The material is listed as 3 x 4.1 structural channel, assumed to be carbon steel. From the dimensions given, it can be seen that 3-20 foot random lengths and one 10 foot random length will provide sufficient sections to construct the frame.

Length/Source	**10 feet (1)**	**20 feet (3)**
Midwest Steel Supply	$53.30	$82.00
Metals Depot	$36.90	$59.00

<u>Totals</u>

Midwest Steel Supply: 53.30 + 82(3) = $299.30

Metals Depot: 36.90 + 59(3) = $213.90

Metals Depot is the cheaper option at **$213.90** total for parts.

III. Pump vessel body parts pricing

The pump vessel can be seen in drawing 466970. Materials are not listed, but a schedule 10, 20 inch diameter carbon steel pipe is difficult to find, so type 304 stainless steel may be used. If this is the case, the rest of the assembly should also be stainless steel. There are two pump vessels in the pump skid assembly. All units are inches, when multiple vendors were quoted the lower price is listed in green.

Item #-Description	Source	Part Number	Quantity	Price
#1-20 IPS Flange, slip on, welding, 150 #, type 304 SS	StL Pipe	N/A	1	$715.00
	Stainless and Alloy	N/A		$625.64
#2-20 IPS sch. 10 pipe type 304 SS (about 26 long)	StL Pipe	N/A	1	$632.00
	Stainless and Alloy	N/A		$642.29
	Napco Steel	N/A		$
#3-20 IPS sch. 10 pipe cap type 304 SS	StL Pipe	N/A	1	$425.00
	Stainless and Alloy	N/A		$485.90
#4-Relief valve, PHPK VR-46 or equiv.	PHPK	VR-46	1	$297.00
#5-Angle, 2 x 2 x ¼, type 304 SS, 7.5 long	Metals Depot	A42214	3 (1-2 foot section)	$35.88
#6-Plate, 2.5 x 2.5 x ¼, type 304 SS	Metals Depot	F514212	3 (1-2 foot length)	$21.30
#7-Bar, 2 x 2.125 x 1, type 304 SS	Metals Depot	F512	4 (1-1foot section)	$51.00

Pump vessel parts total: 625.64 + 632.00 + 425.00 + 297.00 + 35.88 + 21.30 + 51.00 = $2,087.82

Two pump vessels = $4,175.64

IV. Pump top flange

The pump top flange can be seen in drawing 466973. The pump skid contains 2 top flanges total.

Item #-Description	Source	Part Number	Quantity	Price
#1-20 IPS blind flange, 150#, type 304 SS	StL Pipe	N/A	1	$1,095.00
	Stainless and Alloy			$988.85
#2-SS plate, 7 x10 x 3/8 thick	Midwest Steel Supply	N/A	2 – (1 plate)	$129.91
#3-Coupling, PHPK PBA-10 or equiv.	PHPK	PBA-10	1	$749.00
#4-Coupling, PHPK TBA-07 or equiv.	PHPK	TBA-07	1	$1,383.00

Pump top flange parts pricing: 988.85 + 129.91 + 749.00 + 1,383.00 = $3,250.76

Total top pump flange cost (2): $6,501.52

V. Pump skid parts pricing

The pump skid assembly can be seen in drawing 466838, and includes two pump vessel bodies and top flanges. The pump assembly (item #1) will not be included in the total pricing, as it is separately furnished by FNAL and not included in outside quotes. Items 13-16 and 24-27 are listed as Swagelok trademark VCR fittings.

Item #-Description	Source	Part Number	Quantity	Price (each)
#1-Pump Assembly	FNAL	N/A	2	N/A
#2-Pump skid frame (see section II)	Metals Depot	Dwg 466975	1	$213.90
#3-Pump vessel body (see section III)	Various	Dwg 466970	2	$2,087.82
#4-Pump top flange (see section IV)	Various	Dwg 466973	2	$3,250.76
#5-Centering ring assembly, MDC 810014 or equiv.	MDC	810014	2	$138.00
#6-O-ring, Parker 2-470 or equiv.	Parker	2-470	2	$10.00
#7-Vacuum flange, 2.11 od bored to accept 1 od tube, 4 tapped holes on 1.63 B.C., MDC 130007 or equiv.	MDC	130007	2	$20.00
#8-Screw, hex head, 3/8-16unc x 1 long	McMaster	92865A624	8 (1 pack of 50)	$7.46
#9-Gasket, copper, MDC GK-100 or equiv.	MDC	191002	4	$15.00
#10-Flex hose, 1 od tube ends, 3.5 live length min, single braid, hose master mfg or equiv. [1 id]	Hose Master (Motion Industries)	N/A	2	$38.95
#11- Flex hose, 1 od tube ends, 5 live	Hose Master (Motion	N/A	2	$40.04

length min, single braid, hose master mfg or equiv. [1 id]	Industries)			
#12-Filter, type 304 SS, mesh size 250x 250, McM 85385T881	McMaster	85385T881	2	$15.75
#13-Fitting, gland, SS-16-vcr-3 or equiv.	Swagelok	SS-16-vcr-3	4	$36.40
#14-Gasket, cu-16-vcr-2 or equiv.	Swagelok	cu-16-vcr-2	2	$3.80
#15-Fitting, nut, female, ss-16-vcr-1 or equiv.	Swagelok	ss-16-vcr-1	2	$33.50
#16-Fitting, nut, male, ss-16-vcr-4 or equiv.	Swagelok	ss-16-vcr-4	2	$23.90
#17-Tube, 1 od x .035 wall x req' length [apx 1 foot] SS type 304	McMaster	89895K269	2	$13.13
#18-Screw, hex head, 1 1/8-7unc x 5 long	McMaster	92198A152	40	$16.16
#19-Washer, flat, 1 1/8	McMaster	92141A039	80 (8 packs of 10)	$13.67
#20- Vacuum flange, 2.11 od bored to accept 3/4 od tube, 4 tapped holes on 1.63 B.C., MDC 130006 or equiv.	MDC	130006	2	$20.00
#21-Washer, flat, 3/8	McMaster	92141A051	8 (1 pack of 100)	$5.85
#22-Screw, hex head, ¼-28unf x 1.25 long, SS	McMaster	92240A104	16 (1 pack of 25)	$8.18

#23- Flex hose, 3/4 od tube ends, 55 live length min, single braid, hose master mfg or equiv. [3/4 id]	Hose Mater (Motion Industries)	N/A	2	$73.09
#24-Fitting, gland, ss-12-vcr-3 or equiv.	Swagelok	ss-12-vcr-3	4	$28.80
#25-Gasket, cu-12-vcr-2 or equiv.	Swagelok	Cu-12-vcr-2	2	$2.70
#26-Fitting, nut, female, ss-12-vcr-1 or equiv.	Swagelok	ss-12-vcr-1	2	$24.80
#27-Fitting, nut, male, ss-12-vcr-4 or equiv.	Swagelok	ss-12-vcr-4	2	$14.60
#28-Tubing, ¾ od x .035 wall x req' length [2 feet]	McMaster	89895K159	2 (2 three foot sections)	$23.32
#29-Lock washer, 1 1/8	McMaster	92146A039	40 (8 packs of 5)	$13.79
#30-20 layers of insulation	Furnished	N/A	40 layers	N/A

Pump skid parts pricing: [213.90] + [2,087.82(2)] + [3,250.76(2)] + 138.00(2) + 10(2) + 20(2) + 7.46 + 15.00(4) + 38.94(2) + 40.04(2) + 15.75(2) + 36.40(4) + 3.80(2) + 33.50(2) + 23.90(2) + 13.13(2) + 16.16(40) + 13.67(8) + 20.00(2) + 5.85 + 8.18 + 73.09(2) + 28.80(4) + 2.70(2) + 24.80(2) + 14.60(2) + 23.32(2) + 13.79(8) = $13,050.59

Total pump skid parts cost: $13,050.59

***Does not include cryogenic pump or pump assembly (drawings 466880 and 466972)**

VI. In house labor costs

Description	Time (hours)	Base wage	Total labor price
Welding	56	$51/hr	$2,856
Machining	72	$51/hr	$3,672
Technician	88	$51/hr	$4,488
Totals/ [+ 15%]	216/[250]		$11,016/$12,750

Total labor costs: $11,016

Total labor costs [+ 15%]: $12,750

- **$12,750 will be used as the total in house labor cost.**

VII. Total in house part and assembly costs

Description	Cost x quantity(if applicable)	Total Cost
Pump skid frame (parts)	$213.90 x 1	$213.90
Pump vessel body (parts)	$2,087.82 x 2	$4,175.64
Pump top flange (parts)	$3,250.76 x 2	$6,501.52
***Full pump skid (includes frame, body, flange, and additional required parts)**	-	**$13,050.59 (includes all of the above)**
In house labor cost	-	$12,750
Total cost	-	$25,800.59

***Prices do not include pump or pump assembly.**

Total in house assembly and parts: $25,800.59

VIII. Outside quotes

Our Quotation # 003252-00

07/23/2010

Meyer Tool & Mfg., Inc.
4601 W. Southwest Highway
Oak Lawn, IL 60453
708/425-9080 Fax 708/425-2612

To :

Fermi National Accelerator Lab
Technical Division
Material Control Department
PO Box 500
Batavia IL 60510
USA

Quotation Valid Thru : 08/23/2010

Terms : NET 30

Attention : Ron Evans

Your Request : 70110RE Rev #0

Item	Facility / Part / Rev / Description / Details	Quantity Quoted	Unit Price	Extended Price
001	**Default** **FNAL-ME466838 Rev "None"** Rev NS U/M EA Microboone Pump Skid 1. FOB FNAL 2. Milestone(s) TBD Delivery: 8 wks After Receipt of Barber Nichols Pump (Lead Time 26wks)	1.00	164,055.000	$ 164,055.00

We are pleased to quote your requirements. Our company has a reputation for delivering quality products on time and we look forward to the opportunity of serving you. If you have any questions or additional requirements, please feel free to contact us at any time.

Thank you for your interest in our company as one of your suppliers.

Sincerely yours,

Edward C. Bonnema
Vice President of Operations

Customer

Authorized Signature

PHPK TECHNOLOGIES

CVI Torr Master®

2111 Builders Place, Columbus, Ohio 43204 • Office 614-486-4750 • Fax 614-486-4950 • www.phpk.com

Mr. Ron Evans
Procurement Administrator
Fermi National Accelerator Laboratory
Kirk and Pine Street - PO Box 500
Batavia, IL 60510-500

July 23, 2010

RFQ 70110 RE Rev #0
PHPK Proposal P7692

Dear Mr. Evans,

PHPK Technologies (a small business) is pleased to supply a budgetary estimate for the Microboone Pump Skid. PHPK Technologies specializes in the custom engineering, design and fabrication of all sizes of cryogenic Cryostats, Pressure Vessels, Test Dewars and Vacuum Jacketed Piping. PHPK also maintains a full line of standard products including cryogenic valves, bayonets, vacuum seal-off valves and CVI Torr Master® Cryopumps.

PHPK is well qualified and capable of furnishing the necessary personnel, material, equipment, services and facilities to design and build the Microboone Pump Skid in accordance with the terms, conditions, Specification and Drawings in the Request for Quotation package 70110 RE Rev. #0. PHPK will agree to the FermiLab Terms and Conditions Commercial Items FL-200 (6/10) if awarded this contract. PHPK's FL-6 is on file with Fermi, and we agree if awarded this contract will comply with FL-103A.

The total estimate for Two (2) Microboone Pump Skid is $ 56,293.^{00}.

In conclusion, PHPK appreciates the opportunity to submit our estimate for the Microboone Pump Skid. PHPK looks forward to working with Fermi Lab on this important project and many others in the near future. Should any questions or further considerations arise regarding our proposal, please do not hesitate to contact us.

Sincerely,
PHPK Technologies

Timothy F. Savely
Director – Business Development

ABILITY ENGINEERING TECHNOLOGY

16140 SOUTH VINCENNES AVENUE
SOUTH HOLLAND, ILL 60473
708-331-0025 PHONE
708-331-5090 FAX

TO: Fermilab	ATTENTION: Ron Evans
DATE: 07/23/10	FAX: (630)-840-5719 PHONE: (630)-840-4166

RFQ# Email
QUOTE NUMBER: Q 8115
DELIVERY: 4 wks After Receipt of Materials
TERMS: 50% with receipt of material
50% upon shipment of skid

FROM: Eugene Botsoe
PAGE 1 of 1

FOB: South Holland, IL

Signed: [illegible]

We are pleased to respond to your recent inquiry:

Provide a budgetary estimate to furnish all labor, materials, services, equipment, and facilities necessary to fabricate and deliver the following:

1 PC of ME466838 REV# 0, Microboone Pump Skid w/drawing MC466880, MC466972, MC466975, MD466970, MD466973	$36,000 +/- 15%

Notes:

- Fermilab will supply two (2) pump assemblies
- Estimate includes all necessary testing (mass spec and pneumatic)
- Estimate includes painting the frame

We hope that our response meets with your approval, and we thank you for this opportunity to be of service to Fermi Lab. If you have any questions please contact me at your earliest convenience.

VAL-FAB, INC.

Quotation

CUSTOM METAL FABRICATORS
218 Jackson Street - Neenah, WI 54956
P.O. Box 877 - Neenah, WI 54957-0877
Phone: (920) 722-1009 Fax: (920) 722-1685
Toll Free (877) 482-5322

A Service-Disabled Veteran Owned Small Business
ISO 9001:2000 ~ ASME Certified

FERMI NAT'L ACCELERATOR LABORATORY
PO BOX 500
BATAVIA, IL 60510

Letter # 00006787

Phone: 630-840-4166 Fax: 630-840-5719

ATTN:	Quote Date	Valid For	FOB	Delivery	Terms
RONALD G. EVANS rone@fnal.gov	07/22/2010	60 Days	BATAVIA, IL	TBS-NEXT YEAR	SPECIFIED BELOW

We thank you for your recent inquiry and are pleased to offer the following proposal in reply. VAL-FAB, Inc. proposes to furnish labor and material required for the fabrication of the following:

Quote # 0018565

Part Number (Ref: 0007-709)

MICROBOONE PUMP SKID, 304SS
DWG #: 3974.220-ME-466868

RFQ No. 70110RE-Rev.0

Description:	Quantity	Unit Price	Extended Price
PER DRAWING	1	$32,000.00	$32,000.00

Tax Not Included

BUDGETARY QUOTE

DELIVERY TO BE SCHEDULED NEXT YEAR

MILESTONE SCHEDULE: 40% AT MATERIAL PROCUREMENT
BALANCE AT SHIPMENT

TERMS: NET 30 DAYS

We appreciate the opportunity to quote on the above project. If you should have any questions, please do not hesitate to contact me.

By: _____

Glen Bruss
ph: 920-967-2045
email: Glen.Bruss@valfab.com

IV. Conclusions

Source	Delivery Included	Lead time (after receiving materials)	Total
Fermi assembled	N	6.25 weeks	**$25,800.59**
Val-Fab inc.	N	?	$32,000
Ability Engineering	N	4 weeks	$30,600 - $41,400
PHPK	N	?	$28,146.50
Meyer Tool & Mfg	N	8 weeks	$164,055

Having the pump skid assembled on site seems to be the cheaper option, however this estimate does not include any contingency to account for overhead costs.

In this scenario, all parts would be ordered and machined, welded, ex. on site. The pump transition flange, cryogenic pump, and the other “pump assembly” components (drawing 466880) have not been included in either the onsite estimate, or the full outside quotes.