Fermilab

Particle Physics Division

12-01-01

Mechanical Department Engineering Note

Number: MD-Eng-054 Date: August 20, 2004

Project: E907

Project Internal Reference:

Title: CRYO HYDROGEN TARGET SUPPORT

Author(s): Robert J. Woods

Reviewer(s): Ingrid Fang Ingrid Fang 8/25/04

Key Words: E907, Hydrogen Target, JGG, Buffer Vessel

Abstract/Summary:

This is a support frame for a Hydrogen Target, Refrigerator, and Buffer Vessel that will be attached to the upstream end of the Jolly Green Giant magnet. The Refrigerator and Hydrogen Target positions will be adjustable in three axes: vertically, parallel to the beam line, perpendicular to the beam line. The Buffer Vessel will be mounted in a stationary, fixed position.

The frame is constructed from square structural tubing that is welded to both the top and front of the JGG. The West side of the frame supports the Buffer Vessel while the East side supports the Refrigerator and Hydrogen Target.

Due to the low ceiling height above the JGG, the Buffer Vessel cannot be lifted into the frame from the top. The Vessel will be installed by first attaching the bottom support plate to the Vessel, then lifting this combined assembly through the bottom of the frame. Once in position, the bottom support plate will be bolted to the support frame with four bolts.

Vertical adjustment of the Hydrogen Target is accomplished by turning four adjustment bolts to raise or lower each corner of the Refrigerator. Horizontal movement requires first loosening four safety bolts, then turning an adjustment bolt clockwise or counterclockwise to achieve the desired position of the Target. The four safety bolts will then be retightened to prevent uplift of the support plate due to the cantilever of the Target.

Applicable Codes:

1. AISC Manual of Steel Construction, Allowable Stress Design, Ninth Edition

2. ANSI/AWS D1.1-98, Structural Welding Code – Steel

Reference:

Standard Handbook of Machine Design, Second Edition, Joseph E. Shigley and Charles R. Mischke.

Marks' Standard Handbook For Mechanical Engineers, Tenth Edition, Eugene A. Avallone and Theodore Baumeister III.

DESIGN SUPPORT FOR REFRIGERATOR AND BUFFER VESSEL:

REFRIGERATOR WT = 200#

BUFFER VESSEL WT.:

14" ϕ PIPE W/ 0.188" WALL × 66" LG.

$$A = \frac{\pi(d^2 - d_i^2)}{4} = \frac{\pi(14^2 - (14 - (2(0.188))^2)}{4}$$

$$= 8.158 \text{ IN}^2$$

$$66(8.158) = 538 \text{ IN}^3$$

$$490(538)/1728 = 153\#$$

END PLATES:

14" ϕ × 1/4" THICK

$$A = \pi r^2 = 3.14159(7)^2 = 154 \text{ IN}^2$$

$$1/4(154) = 38.5 \text{ IN}^2$$

$$2(490(38.5))/1728 = 22\#$$

MISC = 25#

HYDROGEN TARGET & PIPE = 50#

TOTAL BUFFER VESSEL WT. = 153 + 22 + 25
= 200#

BUFFER VESSEL SUPPORT PLATE:

USING ONE WAY ACTION:

SPAN = 18"

$$M = 200(18)/4 = 900 \text{ \#-IN}$$

TRY 1/2" PLATE:

$$S_x = 1(0.5)^2/6 = 0.042 \text{ IN}^3/\text{IN}$$

$$f_b = 900/0.042(12) = 1800 \text{ PSI} \quad \text{(FOR 12" WIDTH)}$$

$$F_b = 0.75(36{,}000) = 27000 \text{ PSI} \quad > 1800 \quad \text{ok}$$

USE 1/2" THICK PLATE

TRY TS 2×2×1/4 FOR FRAME MEMBERS

CHECK TS 2×2×1/4 FOR COMPACT SECTION

1) $b/t = 2/0.25 = 8.0 < 190/\sqrt{46} = 28$ ok

2) $d < 6w = 2 < 6(2) = 12$ ok

3) $t_f < 2t_w = 0.25 < 2(0.25)$ ok

4) $L_c = (1950 + 1200\, M_1/M_2)\, b/F_y$

$= (1950 + 1200(0/11547))\, 2/46$

$= 84''$

$84'' > 33''$ ok

∴ SECTION IS COMPACT

$F_b = 0.66(46) = 30.4$ KSI

CHECK TOP TUBE FOR BUFFER VESSEL AND REFRIGERATOR LOAD

& VESSEL & REF. TO FACE OF JGG MAGNET = 18.61"

$M = 18.61(200 + (200+50)) = 8375$ #-IN

$S_x = 0.766$ IN^3

$f_b = 8375/0.766 = 10\,933$ psi $< 30{,}400$ psi ok

USE TS 2×2×1/4

WELD REQ'D TO HOLD TUBE TO TOP OF JGG

$M = 8375$ #-IN

LENTH OF TUBE ON TOP OF MAGNET = 12"

$P = 8375/12$

$= 698$#

FOR 3/16" WELD $P_{ALLOW} = 3/16(70{,}000)(.3)(.707)$

$= 2784$ #/IN OF WELD

USE 6" OF 3/16" WELD EA. SIDE OF TUBE

$P_{ALLOW} = 2(6)(2784) = 33\,408$ #

S.F. = 33408/698 = 47

BOTTOM PLATE FOR REFRIGERATOR SUPPORT

LOAD = 200 + 50 = 250 # @ 18.61" FROM FACE / JIG

SPAN = 25.86"

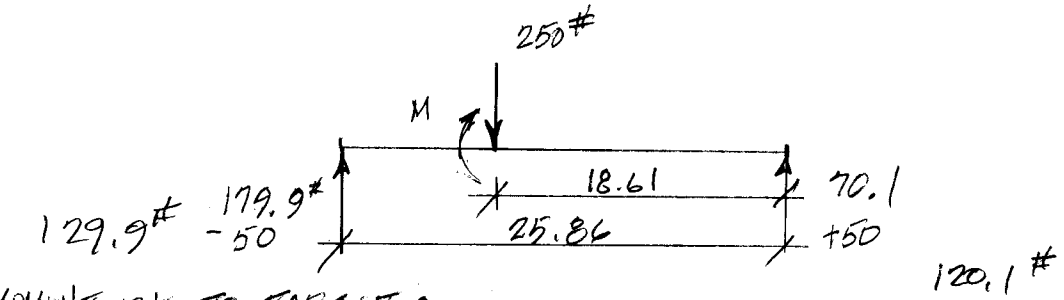

MOMENT DUE TO TARGET:

$M = 50^{\#}(25.675)$

$= 1284$ #-IN

MOMENT DUE TO VERT LOAD:

$250(7.25)(18.61)/25.86 = 1304$ #-IN

MAXIMUM MOMENT = 1284 + 1304

= 2588 #-IN

$f_b = 2588/0.042(6)$ (FOR 6" WIDTH OF PLATE

= 10 270 PSI < 27,000 psi (FOR 1/2" PLATE)

OK

FRICTION:

COEFFICIENT OF FRICTION STEEL ON STEEL = 0.74

F = 130

= 130# (0.74)

= 96# EA SIDE

= 192# TOTAL

REQUIRED BOLT TORQUE TO MOVE REFRIG.

MEAN THREAD DIAMETER = $d_m = d - P/2$ WHERE P = PITCH

$= 5/8 - ((1/11)/2)$

$= 0.58"$ $r_m = \frac{0.58}{2} = 0.29"$

F = EXTERNAL LOAD = 192#

LEAD ANGLE = PITCH FOR STANDARD BOLTS = $pn = (1/11)($

$\lambda = \arctan(pn/\pi d_m) = \arctan((1/11)(1)/\pi\, 0.58)$

$= 2.86°$

COEF. OF FRICTION FOR GREEN THREADS = $\mu = 0.20$

$\phi = \arctan \mu = \arctan 0.20 = 11.31°$

BOLT HEAD BEARING RADIUS = $((15/16 + 5/8)/2)/2 = 0.391" = r_b$

μ_B = COEF. OF FRICTION UNDER BOLT HEAD = 0.18

$$T = W[r_m \tan(\lambda + \phi) + \mu_b r_b]$$
$$= 192[0.290 \tan(2.86 + 11.31) + 0.18(0.391)]$$
$$= 27.5 \text{ IN-LB}$$
$$= \underline{\underline{2.3 \text{ FT. LB.}}}$$

CHECK PUSH-PULL PLATE

TRY 1/2" PL PLATE HEIGHT = 4.125"
℄ SCREW TO BOTTOM OF PLATE = 2.625"

ACTUAL LOAD = 192# DESIGN FOR 200#
$M = 200(2.625) = 525$ #-IN

$S_y = 1(0.5)^2/6 = 0.042 \text{ IN}^3/\text{IN}$
USE 3" LONG PL

S_y TOTAL $= 0.042(3" - 1/16) = 0.097$

$f_b = 525/0.097 = 5{,}405$ PSI < 27,000 PSI OK

<u>USE 1/2" PLATE</u>

SELECT SHEAR PIN:

FOR 200# LOAD:

FROM "STANDARD HANDBOOK OF MACHINE DESIGN" BY J. SHIGLEY SECOND EDITION P. 22.11 TABLE 22.8:

1/8" DOWEL PIN ALLOW. LOAD = 2.6 KIP
> 200# <u>OK</u>

<u>USE 1/8" ϕ DOWEL PIN</u>

VERTICAL LOAD ON BOTTOM ADJUSTER BOLTS

REFRIGERATOR & TARGET = 250#
3 PLATES 20×24×1/2 = 3(20×24×0.5×490/1728) = 204#
TOTAL = 250+204
= 454#

ASSUME 3 OF 4 BOLTS CARRYING LOAD, LOAD/BOLT =
454/3 = 151# < 200# USE SAME BOLTS & PINS AS HORIZ. ADJUSTERS.

ENGINEERS EDGE
Solutions By Design

Geometric Boundaries
Interpretation & Application
$42.50. Plus Shipping
Geometric Dimensioning Tolerancing
ASME Y14.5M 1994

Ads by Goooooogle

Mill-Max Mfg. Corp.
Modular spring-loaded connectors loose or in plastic insulators.
www.mill-max.com

Expert Tube Fabricator
QS 9000 Certified / 150,000 Sq.Ft. Complex Tube Fabrication/Assemb
www.tubefab.org

Quick Release Pins
Innovative Components Detent, Positive Locking & More
www.knobsource.com

Texas Flange
Wide Variety of Industrial Flanges in Carbon, Stainless, and Alloys
www.texasflange.com

Spring Pins (Roll Pins, Split Pins)

[Home] [Hardware Menu]

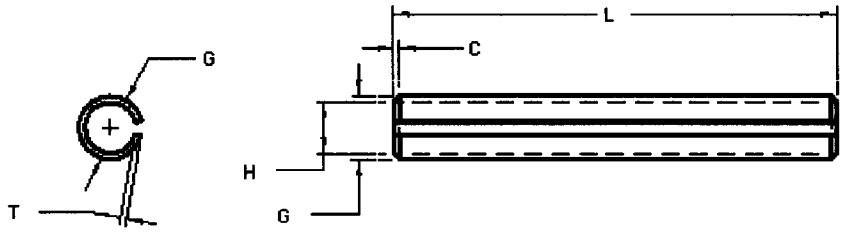

SPRING PINS (Roll Pins, Split Pins)

Nominal Size or Basic Pin Diameter		G Pin Diameter		H Chamfer Diameter	C Chamfer Length		T Wall Thickness	Recommended Hole Size		Double Shear Lbs.	
		Max	Min	Max	Max	Min	Basic	Max	Min	SAE 1070-1095 Steel & 420 SS	300 Series Stainless
1/16	.062	0.069	0.066	0.059	0.028	0.007	0.012	0.065	0.062	430	250
5/64	.078	0.086	0.083	0.075	0.032	0.008	0.018	0.081	0.078	800	460
3/32	.094	0.103	0.099	0.091	0.038	0.008	0.022	0.097	0.094	1150	670
1/8	.125	0.135	0.131	0.122	0.044	0.008	0.028	0.129	0.125	1875	1090
5/32	.156	0.167	0.162	0.151	0.048	0.010	0.032	0.160	0.156	2750	1600
3/16	.188	0.199	0.194	0.182	0.055	0.011	0.040	0.192	0.187	4150	2425
7/32	.219	0.232	0.226	0.214	0.065	0.011	0.048	0.224	0.219	5850	3400
1/4	.250	0.264	0.258	0.245	0.068	0.012	0.048	0.256	0.250	7050	4100
5/16	.312	0.330	0.321	0.306	0.080	0.014	0.062	0.318	0.312	10800	6300
3/8	.375	0.395	0.385	0.368	0.095	0.016	0.077	0.382	0.375	16300	9500
7/16	.438	0.459	0.448	0.430	0.095	0.017	0.077	0.445	0.437	19800	11500
1/2	.500	0.524	0.513	0.485	0.110	0.025	0.094	0.510	0.500	27100	15800

TEST STAND STABILITY: SEE PAGES 8 & 9 FOR BLOCK LAYOUT

OVERTURNING MOMENT:

FROM PAGE 2 OF THIS CALCULATION:

$M_{BUFFER\ VESSEL\ \&\ REFRIGERATOR} = \underline{8375\ \#\text{-IN}}$

WEIGHT OF SUPPORT FRAME:

6 TUBES × 30" LONG = $6(30/12)(5.41) = 81\#$

3 VERT. TUBES × 37.5" = $3(37.5/12)(5.41) = 51\#$

2 HORIZ TUBES × 37.7" = $3(37.7/12)(5.41) = 51\#$

1 HORIZ. TUBE × 17.7" = $1(17.7/12)(5.41) = 8\#$

MISC. PLATES & BOLTS $= 10\#$

$201\#$

ADJUSTING PLATES:

BUFFER VESSEL SUPPORT

$(21.5(22.06)(0.5))/1728(490) = 67\#$

REFRIG. SUPPORT PL

$490(17.25(15.75)(0.62) - (\pi(6)^2/4))/1728 = 40\#$

REFRIG. SUPPORT PL LOWER

$490(20.81(17.88)(0.62) - (\pi(6)^2/4))/1728 = 57\#$

REFRIG. LEVELING PL

$490(23.69(19.5)(0.62) - (\pi(6)^2/4))/1728 = 59\#$

$223\#$

TOTAL WT = $201 + 223 = 424\#$

SAY $500\#$

TOP "J" BLOCK:

TOTAL OVERTURNING MOMENT =

$8375 + 500(18.62) = 17{,}685\ \#\text{-IN}$

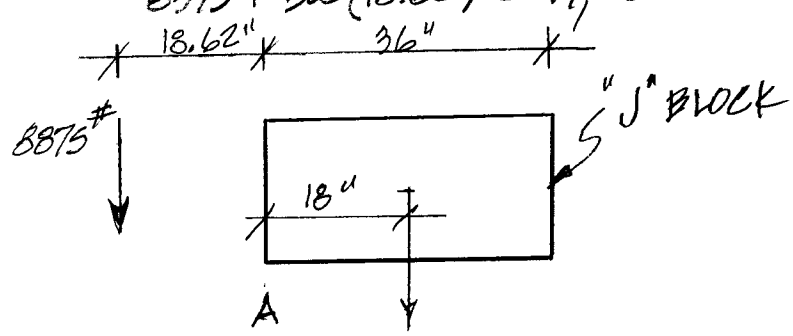

TOTAL RESISTING MOMENT FOR TOP "J" BLOCK:

$M_R = 7520\#(18") = 135360\ \#\text{-IN}$

∴ SAFETY FACTOR AGAINST OVERTURNING =

$135360/17{,}685 = 7.65 > 3.0$ ok

LOADING ON NEXT "J" BLOCK FROM TOP "J" BLOCK

LOAD DUE TO TEST STAND MOMENT $= (17685/36)2$
$= \pm 245.625$

$R_L = \frac{1}{2}(1.5(3.0)(12)/2)(144) + 245.625$
$= 2189.625$

$R_R = \frac{1}{2}(1.5(3.0)(12)/2)(144) - 245.625$
$= 1698.375$

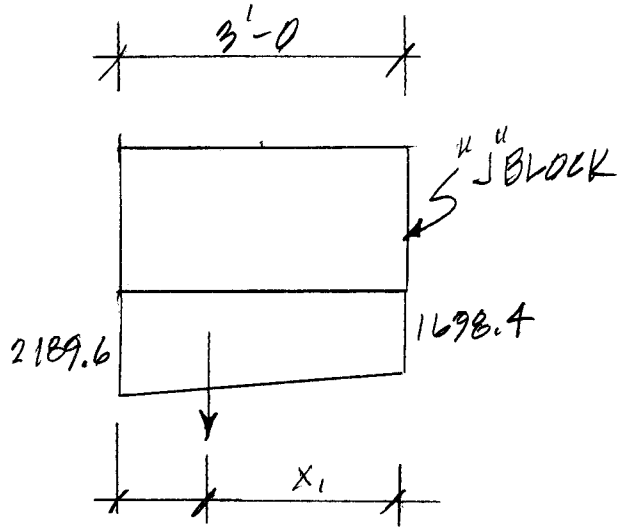

$$X_1 = \frac{d(2b+b_1)}{3(b+b_1)} = \frac{36(2(2189.6)+1698.4)}{3(2189.6+1698.4)}$$
$$= 18.75''$$

LOADING ON "D" BLOCK

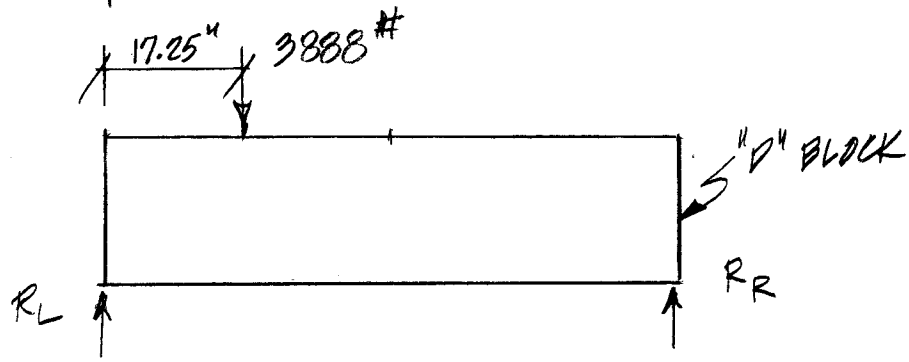

$R_R = (17.25(3888) + 36(4050))/72$
$= 2956.5^{\#}$

$R_L = (54.75(3888) + 36(4050))/72$
$= 4981.5^{\#}$

SINCE R_R IS POSITIVE, NO OVERTURNING.
OK

LOADING ON "C" BLOCK

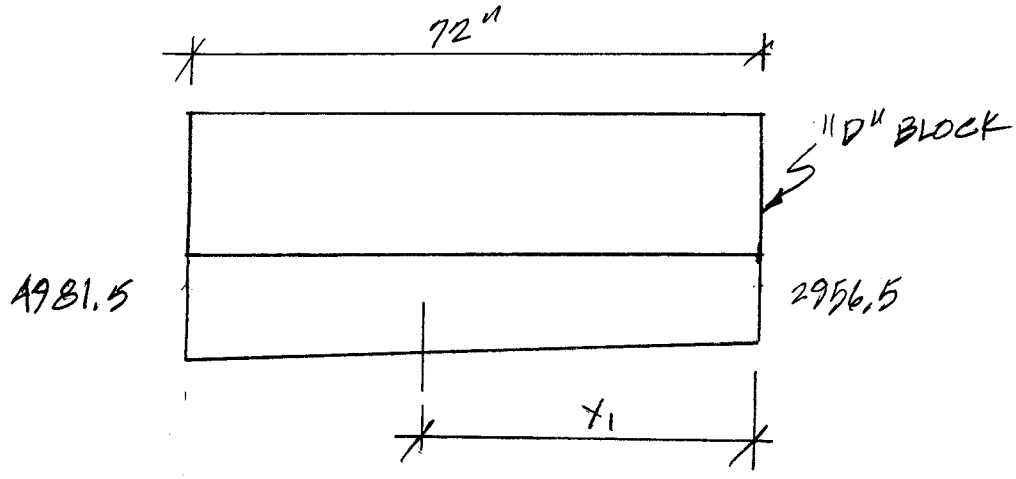

$$X_1 = \frac{72(2(4981.5)+2956.5)}{3(4981.5+2956.5)}$$
$$= 39.06''$$

LOADING ON FLOOR

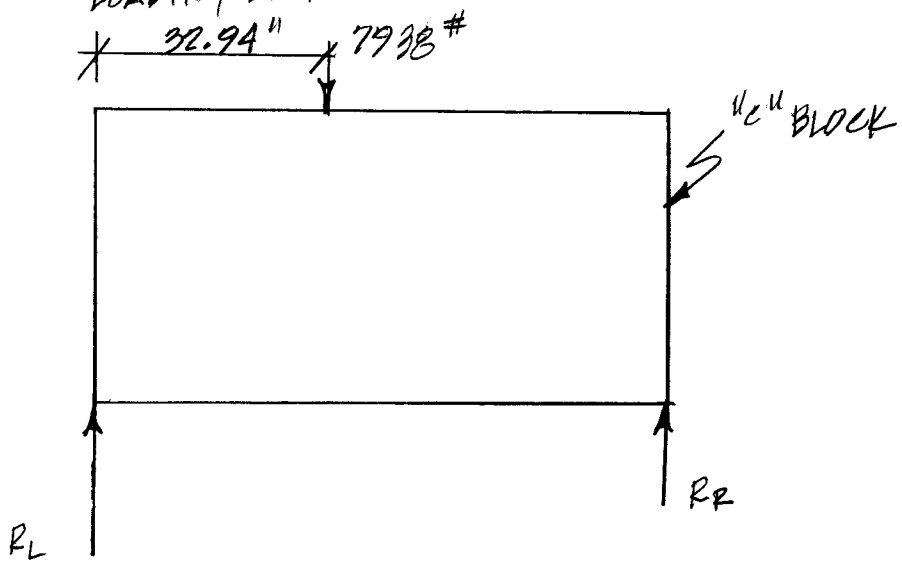

$$R_R = (32.94(7938) + 36(8100))/72$$
$$= 7681.6^{\#}$$
$$R_L = (39.06(7938) + 36(8100))/72$$
$$= 8356.4^{\#}$$

SINCE R_R IS POSITIVE, NO OVERTURNING

OK

TOP VIEW

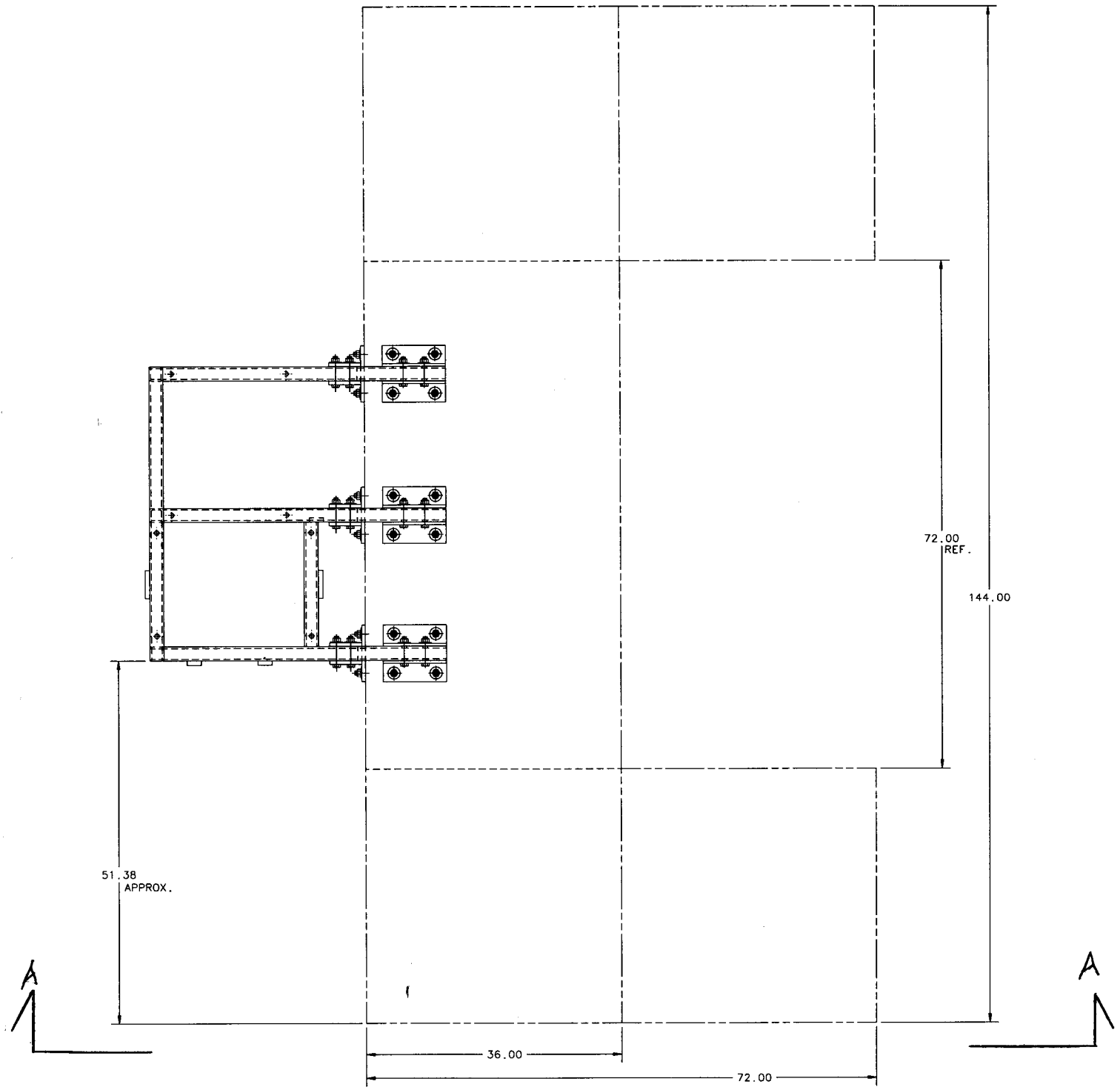

E 907 CRYO HYDROGEN TARGET

R.J. WOODS
SEPT. 22, 2004

8

SECTION A-A

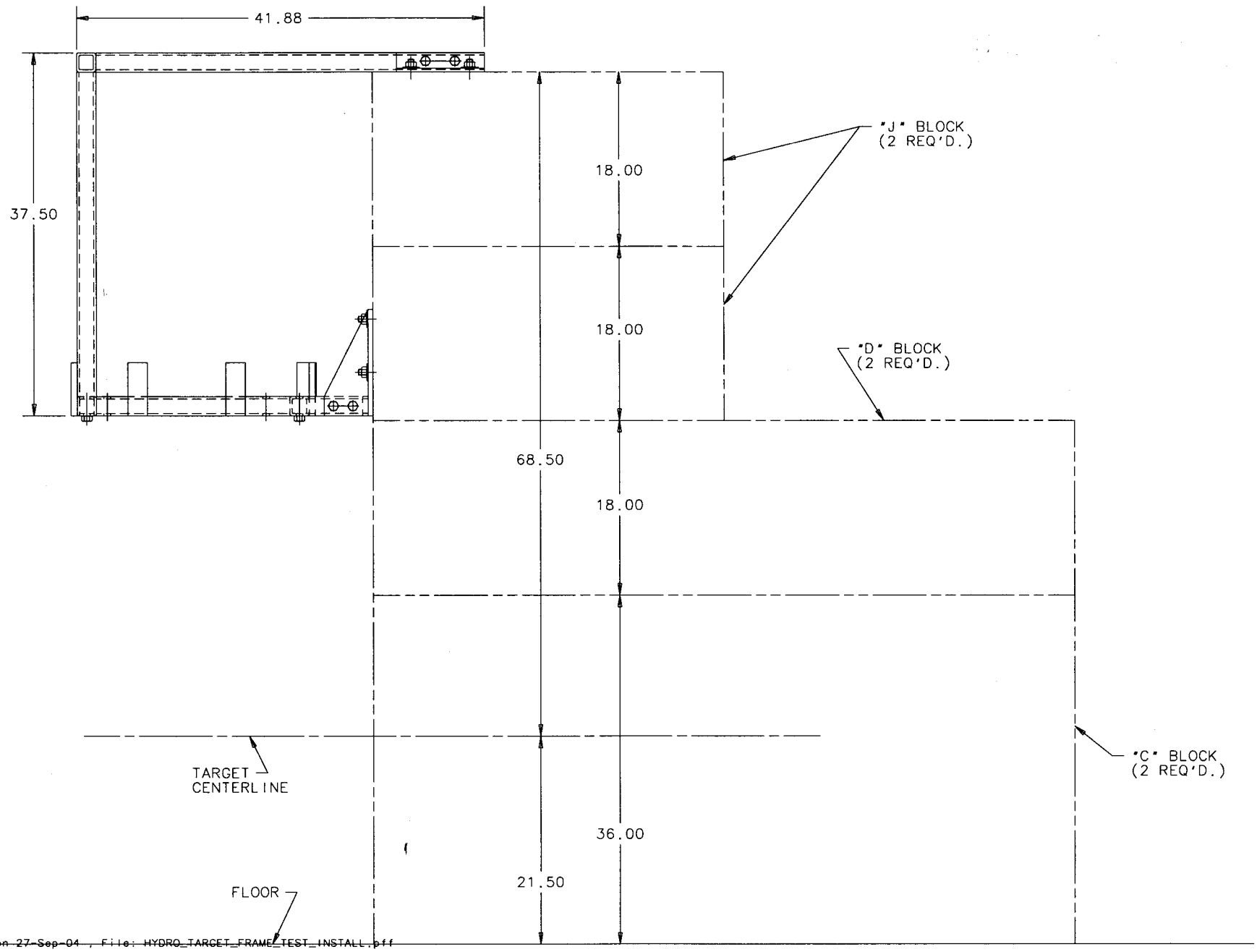

Plotted by rjwoods on 27-Sep-04 , File: HYDRO_TARGET_FRAME_TEST_INSTALL.pff

FRONT

E907 CRYO HYDROGEN TARGET

R.J. WOODS SEP. 22, 2004

9