Fermilab

Particle Physics Division
Mechanical Department Engineering Note

MD-ENG-379

Number: PPD doc-1347 Date: April 4, 2011

Project: CMS Upgrade Cooling System Test Design

Title: CMS CO_2 Test Stand Piping Note

Author(s): Erik Voirin

Reviewer(s): Andy Stefanik

Key Words: Piping note, 31.3, ASME, 5031

Abstract Summary:

The CMS CO_2 Detector test stand contains piping which runs from the storage tank suspended in Lab C to the South Clean room of Lab C and back again. This document serves to provide details on the piping system and its components. The piping could be subject to up to 1200 psi and a temperature drop from room temperature, down to -73C, (-100F). This piping note analyzes these criteria and shows stress does not exceed the amount allowed by ASME 31.3 code for process piping.

Table of Contents

1. Engineering Note 3

2. Description and Identification 5

3. Design Verification 9

4. Pressure Containment / Relief System 52

5. Welding Information 71

6. Welders qualifications 73

7. Inspection Plan / Examiners Report 86

8. Component Identification 98

9. Leak / Pressure Test Procedures 178

1. FESHM 5031.1 PIPING ENGINEERING NOTE FORM

Prepared by: **Erik Voirin** Preparation Date: **4-25-2011**

Piping System Title: **CMS CO_2 Cooling Test Stand**

Lab Location: **Lab C** Location code: **604**

Purpose of system**: Two Phase Carbon Dioxide Cooling Experiments**

Piping System ID Number: **none assigned to date**

Appropriate governing piping code: **ASME B31.3 Category: Normal Fluid Service**

Fluid Service Category (if B31.3): **Normal Fluid Service**

Fluid Contents: **Carbon Dioxide**

Design Pressure: **1200 psi @ -110F**

Piping Materials: **304 SS and 304L SS**

Drawing Numbers (PID's, weldments, etc.): **9212-750-ME-466879**

Designer/Manufacturer: **Fermilab**

Test Pressure: **1320 psig** Test Fluid: **Nitrogen** Test Date: **April 25, 2011**

Statements of Compliance

Piping system conforms to FESHM 5031.1, installation ***is not*** exceptional: **Yes**

Piping system conforms to FESHM 5031.1, installation ***is*** exceptional and has been designed, fabricated, inspected, and tested using sound engineering principles: **N/A**

Reviewed by: _____ (Print Name)

Signature: _____Date: _____

D/S Head's Signature: _____Date: _____

The following signatures are required for exceptional piping systems:

ES&H Director's Signature: _____Date: _____

Director's Signature or Designee: _____Date: _____

Pipe Characteristics

Size**: Schedule 10S: ½" to 1.5": Refer to Drawings** Volume: **~ 14 Gallons**

Relief Valve Information:

Type: **Spring Loaded** Manufacturer: **Anderson Greenwood**

Set Pressure: not applicable Relief Capacity: **1200 psig**

Relief Design Code: **ASME**

Is the system designed to meet the identified governing code? **Yes**

Fabrication Quality Verification:

Process and Instrumentation diagram appended? **Yes**

Process and Instrumentation component list appended? **Yes**

Is an operating procedure necessary for safe operation? **No**

If 'yes', procedure must be appended.

Exceptional Piping System

Is the piping system or any part of it in the above category? **No**

If "Yes", follow the requirements for an extended engineering note for Exceptional Piping Systems.

Quality Assurance

List vendor(s) for assemblies welded/brazed off site: **None**

List welder(s) for assemblies welded/brazed in-house:

(Ryan - Welder #3), (Mike Jenniga Welder #2), (Mike Cooper)

Append welder qualification Records for in-house welded/brazed assemblies. **Yes**

Append all quality verification records required by the identified code (e.g. examiner's certification, inspector's certification, test records, etc.) **Yes**

2. Description and Identification

The piping in the CMS CO_2 Cooling Test stand is an experimental setup which will be used to transfer liquid, gaseous, and supercritical CO_2 from the storage tank of the system to the CMS detector test stand and back again. The cooling system uses three commercial chillers using R-404a as a refrigerant to cool the 300 lbs. of Carbon Dioxide in the cooling system. The piping network also contains several pressure vessels each of which serve a different purpose for the cooling system. These vessels are all ASME stamped pressure vessels, all of which have been designed and tested to ASME standards. As seen in the Figure 1, the vessels are the STORAGE TANK, HEATER VESSELS (2), and the PHASE SEPARATION TANK. Pressure vessel notes for the four vessels have been completed, reviewed, and approved. Links to Engineering Notes:

http://www-esh.fnal.gov:8001/PV_Eng_Notes/PPD10132.pdf

http://www-esh.fnal.gov:8001/PV_Eng_Notes/PPD10133.pdf

http://www-esh.fnal.gov:8001/PV_Eng_Notes/PPD10134.pdf

http://www-esh.fnal.gov:8001/PV_Eng_Notes/PPD10131.pdf

The piping system and all vessels are designed to 1200 psi of internal pressure, and -110F shock temperature. This design pressure was chosen so the system could sit pressurized at room temperature for extended periods of time without the need for evacuating the system. The saturation pressure of CO_2 is 1070 psi at 88F, beyond that temperature CO_2 becomes supercritical and pressures are dependent on density of the fluid due to the volume of containment. The design temperature of the system was chosen as -110F is the temperature in which CO_2 will flash to during a pipe rupture, or other sudden release of pressure down to atmospheric. This temperature was obtained by

following a line of constant enthalpy on the CO_2 phase diagram. The piping will be insulated by 2" thick fiberglass pipe insulation and hung from pipe hangers throughout the building. All piping is grade 304 or 304L stainless steel, schedule 10S or thicker. Nominal Diameters range from ½" to 1- ½".

A system overview can be seem in Fig.1, which is drawn spatially similar to the piping and instrument diagram which is attached for reference on the following page.

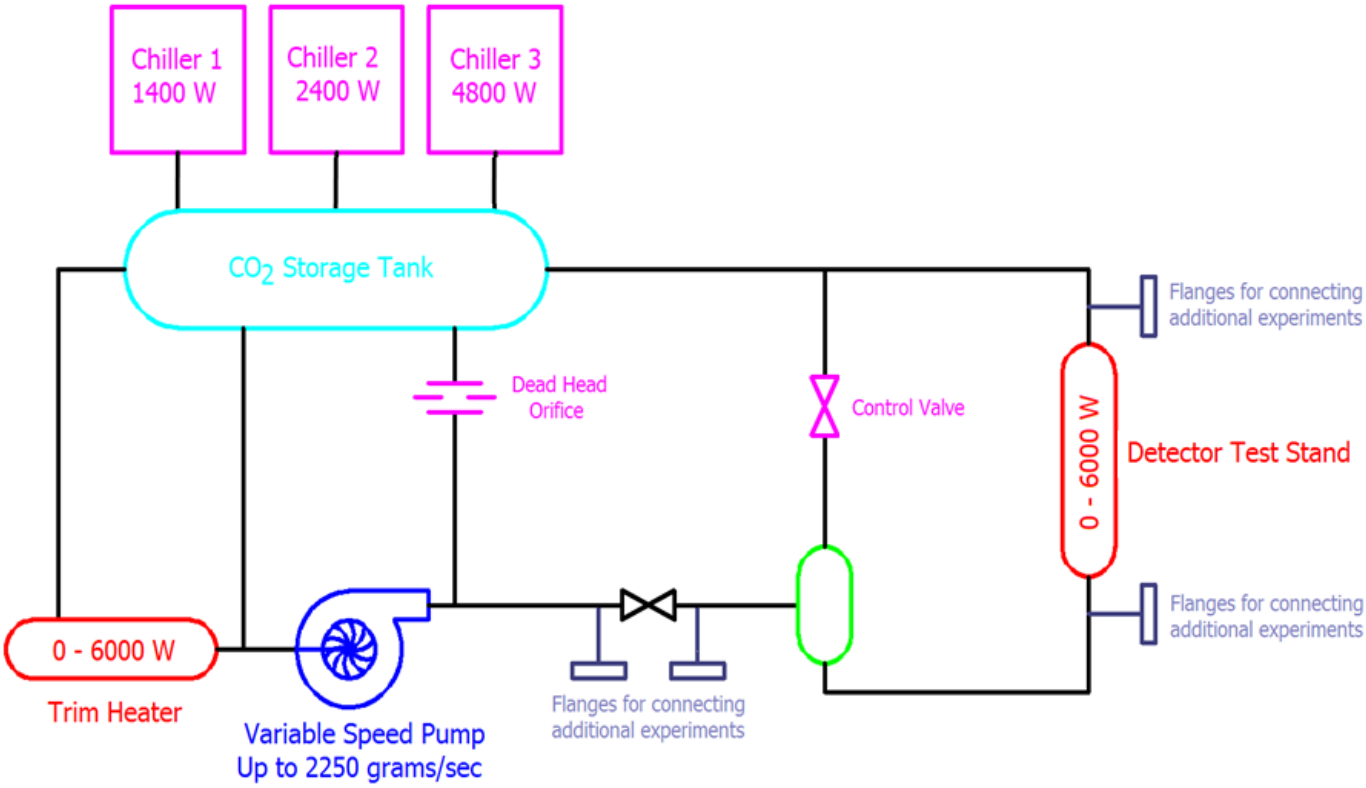

Fig.1 – CMS CO_2 test stand cooling system overview.

REV	DESCRIPTION	DRAWN	DATE
		APPROVED	DATE

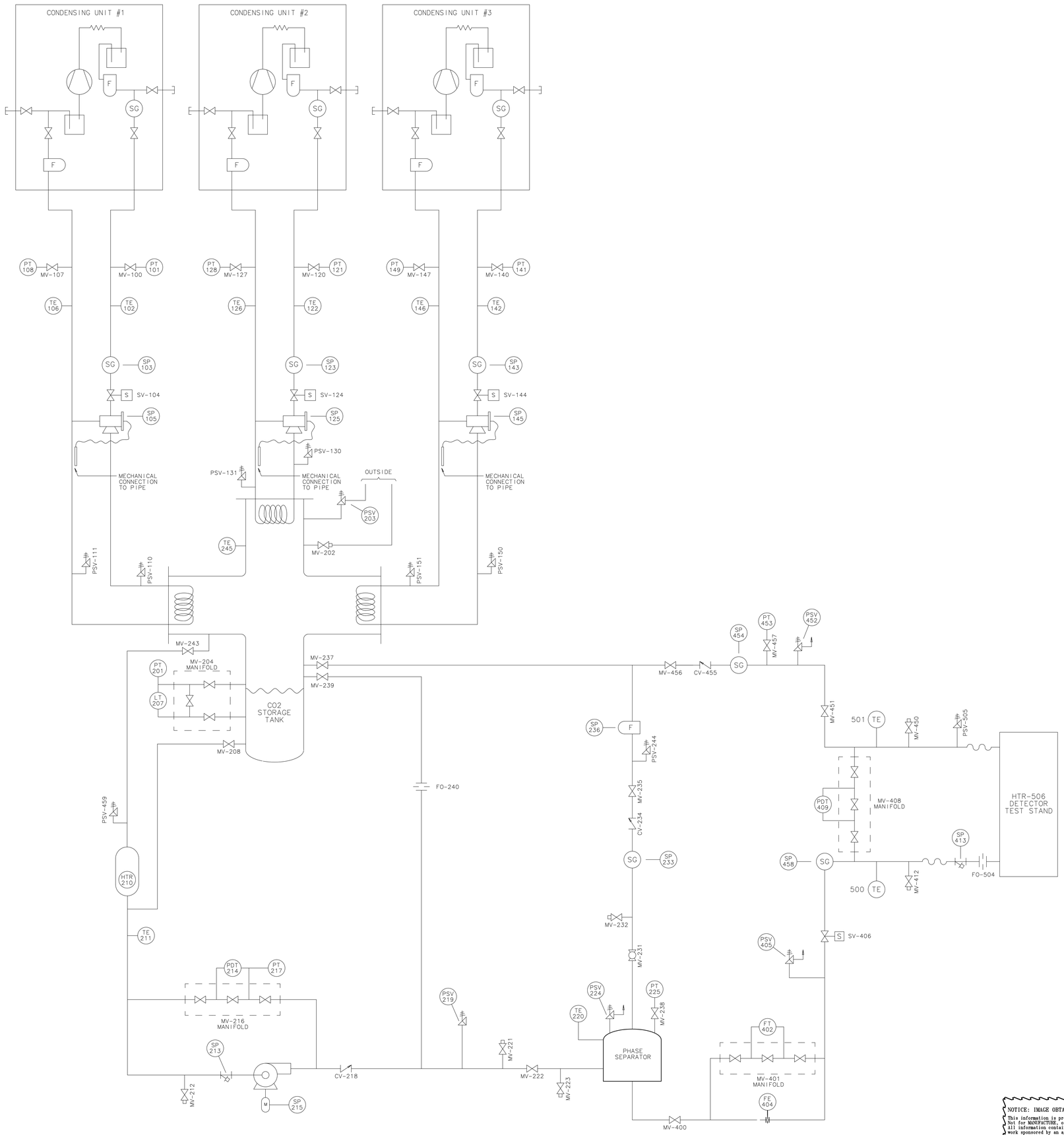

UNLESS OTHERWISE SPECIFIED	ORIGINATOR	M.ADAMOWSKI	04-FEB-2010
	DRAWN	J.CATALANELLO	09-FEB-2010
± ± ±	CHECKED	E.VOIRIN	02-AUG-2010
1. BREAK ALL SHARP EDGES MAX. 2. DO NOT SCALE DRAWING. 3. DIMENSIONS BASED UPON	APPROVED	E.VOIRIN	02-AUG-2010
4. MAX. ALL MACH. SURFACES	USED ON		
5. DRAWING UNITS:	MATERIAL		

FERMI NATIONAL ACCELERATOR LABORATORY
UNITED STATES DEPARTMENT OF ENERGY

CMS/DETECTORS PIXEL CMS CO2 COOLING P&ID

SCALE	DRAWING NUMBER	SHEET	REV
NONE	9212.750-ME-466879	1 OF 1	

CREATED WITH : Ideas12NXSeries GROUP: PPD/MECHANICAL DEPARTMENT

NOTICE: IMAGE OBTAINED FROM FERMILAB WEB SITE

This information is provided for REFERENCE use only. Not for MANUFACTURE, or DESIGN INFORMATION. All information contained in this document represents work sponsored by an agency of the U.S. Government. Neither the U.S. Government nor any agency thereof, nor Universities Research Association, Inc., nor any of their employees or officers, makes any warranty, express or implied, or assumes any legal liability or responsibility for the accuracy, completeness, or usefulness of any information, apparatus, product or process disclosed, or represents that its use would not infringe privately owned rights.

3. Design Verification

The CMS piping meets the requirements of Section 5031.1 of the Fermilab ES&H Manual. This section states that this piping system falls under the category of Normal Fluid Service and shall adhere to the requirements of the ASME Process Piping Code B31.3.

Materials:

The piping is fabricated from 304 or 304L stainless steel tube and pipe. The lowest allowable stress for both of these materials from Table A-1 of ASME B31.3 is 16,700 psi. The CO_2 lines are primarily made of schedule 10 pipe.

The piping will be operated at -40C (-40F) minimum. This is above the minimum temperature listed for 304/316 stainless steel pipe or tube (19 K). According to Table 323.2.2 of the Code, impact testing is not required for these austenitic stainless steels. (Reference "Bo LarTPC Cryostat Piping System Engineering Note" by T. Tope)

The minimum possible temperature would happen under a pipe rupture, where the pipe could reach temperatures down to -73C (-100F) due to the sudden expansion of the CO_2 and flashing of the fluid down to this Temperature. This is above the minimum temperature listed for 304/316 stainless steel pipe or tube (19 K). According to Table 323.2.2 of the Code, impact testing is not required at the system design temperature of -110F for these austenitic stainless steels or the Weld filler metal (308L)

(Reference "Bo LarTPC Cryostat Piping System Engineering Note" by T. Tope)

Stress analysis:

Calculations were done for stress due to pressure, pipe weight, and thermal contraction. The design uses standard tubing and fittings, which meet specifications of ASTM A403, and are therefore rated to the same temperature and pressure as the same pipe size and schedule number according to ASME 31.3.

The minimum thickness of the pipes is evaluated using the procedures in 304.1.2(a) of ASME B31.3. All trapped volume relief valves are set at 1200 psig. The minimum tube thickness for seamless or longitudinally welded piping for t < D/6 is given by the equation:

$$t = \frac{PD}{2(SEW + PY)}$$

Where: t = wall thickness,

P = internal design pressure

D = outside diameter (manufacturers nominal value is used)

S = allowable stress from table A-1 = 16.7 ksi

E = quality factor from table A-1B = 1 for seamless, 0.8 for clamshell

W = weld joint strength reduction factor = 1 for seamless tubing, 0.8 for clamshell per 302.3.4.

Y = coefficient from Table 304.1.1 = 0.4

The piping system contains four sizes of schedule 10S piping: ½”, ¾”, 1”, and 1-½” and also ¼” OD 304SS instrument tubing. Calculations for the stresses seen in these four pipe sizes in order due to the design pressure of 1200 psi are as follows:

$$t = \frac{P \cdot D}{2 \cdot (S \cdot E \cdot W + P \cdot Y)} \text{ solve}, S \rightarrow \frac{\frac{D \cdot P}{t} - 2 \cdot P \cdot Y}{2 \cdot E \cdot W}$$

$$D := \begin{pmatrix} 0.840 \\ 1.050 \\ 1.315 \\ 1.9 \end{pmatrix} \text{in} \qquad t := \begin{pmatrix} 0.083 \\ 0.083 \\ 0.109 \\ 0.109 \end{pmatrix} \text{in} \qquad W := 1 \qquad Y := 0.4 \qquad E := 1 \qquad P := 1200\text{psi}$$

$$S := \frac{\frac{D \cdot P}{t} - 2 \cdot P \cdot Y}{2 \cdot E \cdot W} = \begin{pmatrix} 5592 \\ 7110 \\ 6759 \\ 9979 \end{pmatrix} \text{psi}$$

This shows a stress due to internal pressure below the allowable limit of 16.7 ksi. Stresses seen were between 5592 psi for the smallest pipe size of ½”, up to 9979 psi seen in the largest pipe size of 1-½”. Instrument tubing is 304SS (0.25” OD by 0.055” wall) and has a much lower stress of only 2247 psi using the above formula. Calculations for thermal contraction are much more complicated, so ANSYS was used to compute these stresses, as was pipe weight and secondary stress analysis.

Route descriptions, calculations, and analyses

Section Contents:

FEA Boundary Conditions

FEA simple model testing

Pipe section weight calculation

Section 1

Section 2

Section 3

Section 4

Section 5

Sections 3, 4,and 5 combined

Section 6

Pressure Vessel Block off Plates

FEA / Boundary condition Testing

Ansys is a very powerful FEA program and fully capable of performing any thermal or structural analysis, yet it is generic in the respects it is not specifically designed for piping systems. boundary condition selection must be made to match real world fixing points, supports, weights, and such. Piping programs have predefined "pipe hanger supports" "flanged connections" ect. where in Ansys these must be simulated. This report explains boundary conditions for the analyses and conducts simple Calculations which can be checked with hand calculations in order to assure correct boundary conditions and accuracy.

Since the ends will be flanged connections, they will be somewhat fixed position wise, but the cylinder will be able to expand and contract radially and axially since the flange will expand and contract due to temperature just as the pipe will. The flange would only assist in holding internal pressure, so the free radial expansion is conservative for a pressure application.

The pipe shown in the figure has the displacement set to zero in the Z direction and is free in all others. The cylindrical support is fixed tangentially and free in all others.

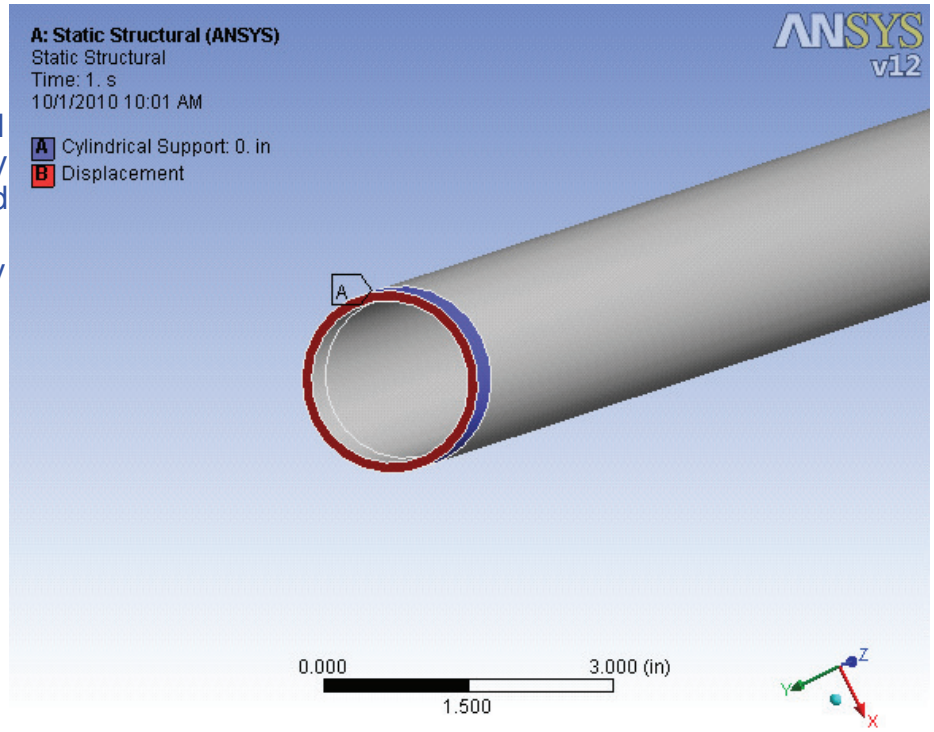

Hand Calculations for Stress / Boundary condition Testing

Pipe is grade 304 Stainless Steel

Temperature Change Stress

Coefficient of Thermal Expansion

$$\alpha := \frac{1.7 \cdot 10^{-5}}{K}$$

Modulus of Elasticity

$$E := 1.93 \cdot 10^{11} Pa$$

Initial Temperature

$$T_i := 71.6$$

Final Temperature

$$T_f := 20$$

$$\Delta T := (T_i - T_f)\left(\frac{5}{9}\right) K$$

Thermal strain

$$\varepsilon := \alpha \cdot \Delta T = 4.873 \times 10^{-4}$$

Using Duhamel Neumann form of Hooke's law, the deformation is zero so the mechanical strain must equal the thermal strain.

Stress

$\varepsilon \cdot E = \sigma$ $\qquad \sigma := \varepsilon \cdot E = 13642 \cdot psi$

Ansys computes:

Boundary conditions applicable for temperature induced stress

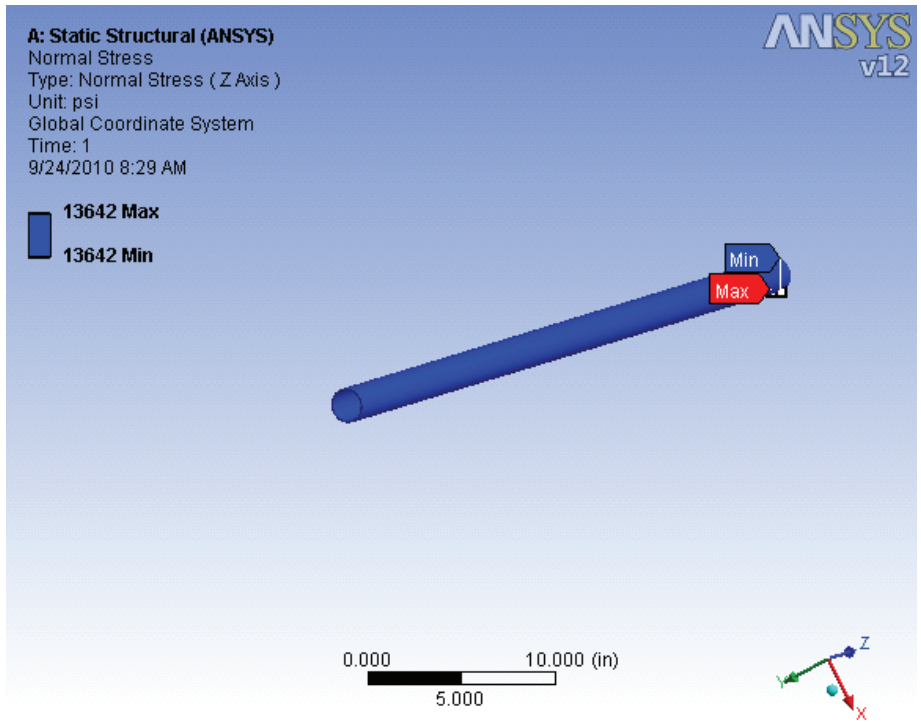

Stress due to weight of pipe

$Weight := 50lbf$

$D_o := 1.9in \qquad D_i := 1.682in$

$$I := \frac{\pi}{64} \cdot \left(D_o^{\,4} - D_i^{\,4}\right) = 0.247 \cdot in^4$$

$$c := \frac{D_o}{2} = 0.95 \cdot in$$

$Length := 48in$

$$w := \frac{Weight}{Length} = 1.042 \cdot \frac{lbf}{in}$$

$$y_{max} := \frac{w \cdot Length^4}{384E \cdot I} = 0.00208 \cdot in$$

$$M := \frac{w \cdot Length^2}{12} = 200 \cdot lbf \cdot in$$

16 Fixed supports—uniform load

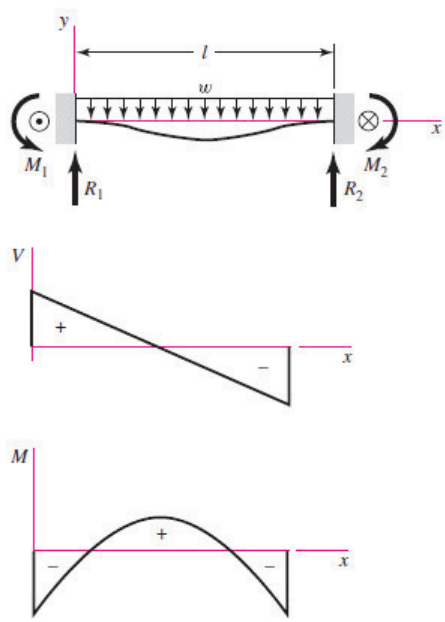

$$R_1 = R_2 = \frac{wl}{2} \qquad M_1 = M_2 = \frac{wl^2}{12}$$

$$V = \frac{w}{2}(l - 2x)$$

$$M = \frac{w}{12}(6lx - 6x^2 - l^2)$$

$$y = -\frac{wx^2}{24EI}(l - x)^2$$

$$y_{max} = -\frac{wl^4}{384EI}$$

Boundary condition applicable for bending

$$\sigma := \frac{M \cdot c}{I} = 769.795 \cdot psi$$

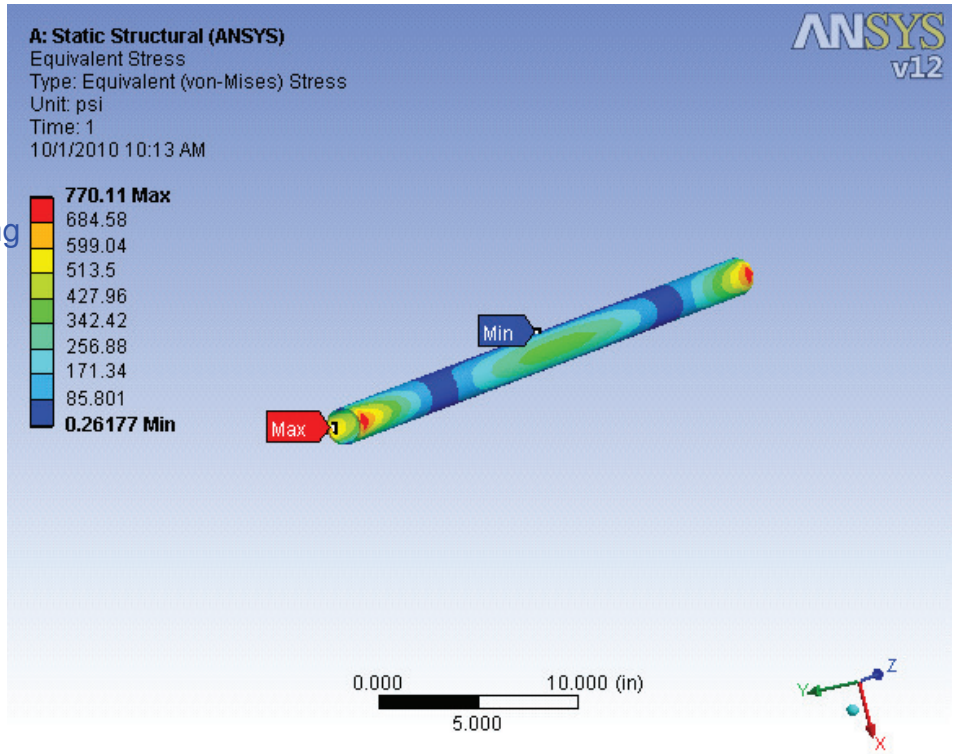

Boundary condition app. for deflection

$$\text{deflection} := y_{max} = 0.002084 \cdot in$$

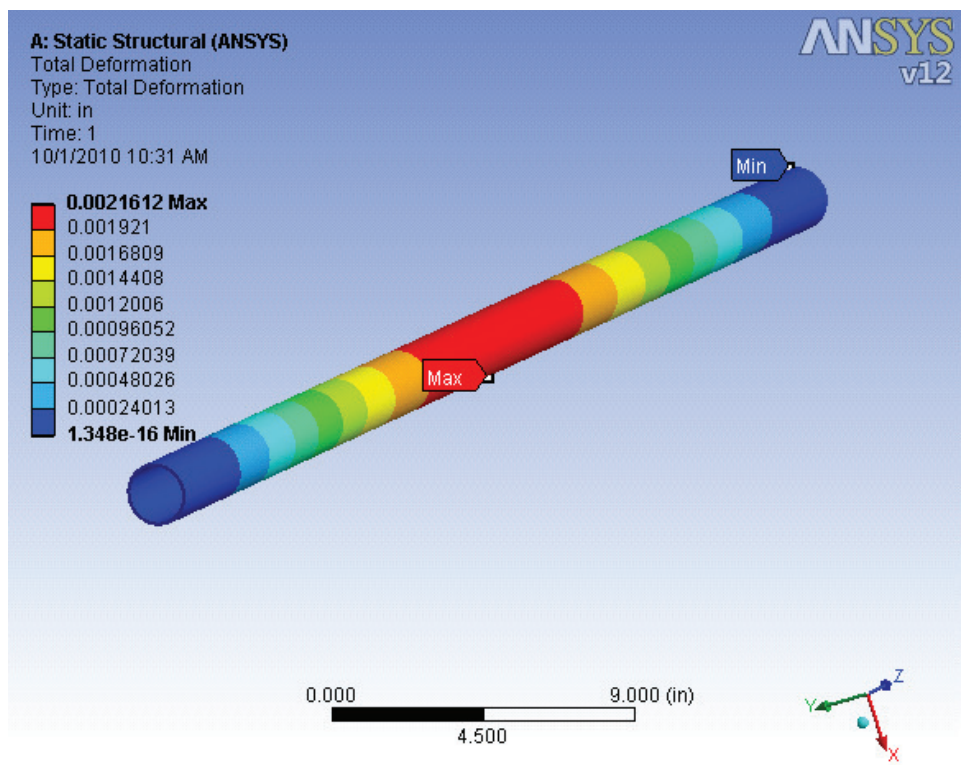

Stress due to internal Pressure

$$r_i := \frac{D_i}{2} \qquad r_o := \frac{D_o}{2} \qquad p_i := 1200\text{psi}$$

$$\sigma_t := \frac{r_i^2 \cdot p_i}{r_o^2 - r_i^2} \cdot \left(1 + \frac{r_o^2}{r_i^2}\right) = 9895 \cdot \text{psi}$$

$$\sigma_r := \frac{r_i^2 \cdot p_i}{r_o^2 - r_i^2} \cdot \left(1 - \frac{r_o^2}{r_i^2}\right) = -1200 \cdot \text{psi}$$

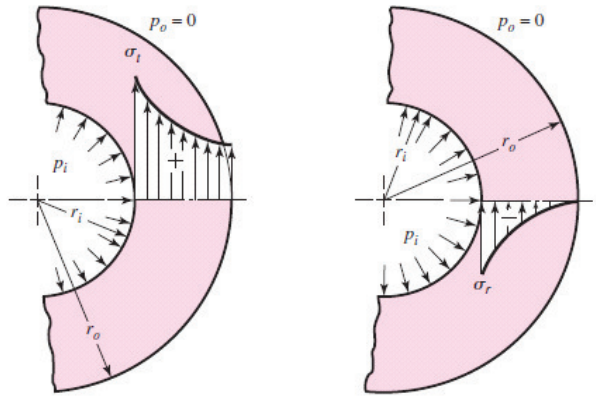

(*a*) Tangential stress distribution

(*b*) Radial stress distribution

$$\sigma_t = \frac{r_i^2 p_i}{r_o^2 - r_i^2}\left(1 + \frac{r_o^2}{r^2}\right)$$

$$\sigma_r = \frac{r_i^2 p_i}{r_o^2 - r_i^2}\left(1 - \frac{r_o^2}{r^2}\right)$$

$$\nu := 0.30$$

$$\epsilon_x = \frac{1}{E}\left[\sigma_x - \nu(\sigma_y + \sigma_z)\right]$$

$$\epsilon_y = \frac{1}{E}\left[\sigma_y - \nu(\sigma_x + \sigma_z)\right]$$

$$\epsilon_z = \frac{1}{E}\left[\sigma_z - \nu(\sigma_x + \sigma_y)\right]$$

$$\varepsilon_Z := 0 \qquad \varepsilon_Z = \frac{1}{E}\left(\sigma_Z - \nu\left(\sigma_t + \sigma_r\right)\right)$$

$$\sigma_Z := \varepsilon_Z \cdot E + \nu \cdot \left(\sigma_t + \sigma_r\right) = 2609 \cdot \text{psi}$$

$$\text{vonMises} := \left[\frac{\left(\sigma_t - \sigma_Z\right)^2 + \left(\sigma_Z - \sigma_r\right)^2 + \left(\sigma_r - \sigma_t\right)^2}{2}\right]^{\frac{1}{2}} = 9765 \cdot \text{psi}$$

Boundary condition app. for pressure

$$\text{Pressure} := \text{vonMises} = 9.765 \times 10^3 \cdot \text{psi}$$

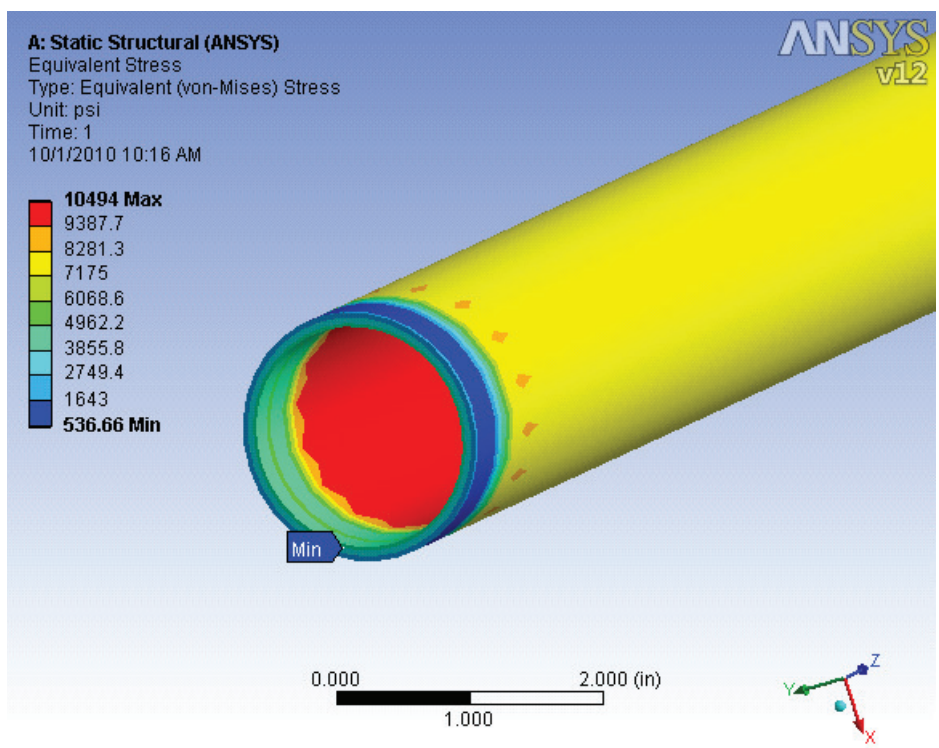

Pipe supports

Since Ansys WB does not have pipe supports, judgement was used in determining the type of supports to use.

The pipe will be supported by pipe hangers and will be inside 2" fiberglass insulation. Physical examination of the insulation showed a square inch of the insulation could be compressed from two to 1 inches with about 10-20 lbs of pressure. Therefore an elastic support with a foundation stiffness of 15lb/in^3 was inserted on the pipe at the locations of the pipe cradles.

Weight of Pipe on other components for dead weight analysis:

$OD_{1.5} := 1.9in$ $\quad AO_{1.5} := \frac{\pi}{4} \cdot OD_{1.5}^2$

$ID_{1.5} := 1.682in$ $\quad AI_{1.5} := \frac{\pi}{4} \cdot ID_{1.5}^2$

$OOD_{1.5} := OD_{1.5} + 4in$ $\quad AOO_{1.5} := \frac{\pi}{4} \cdot OOD_{1.5}^2$ $\quad A_{1.5} := AO_{1.5} - AI_{1.5} = 0.613 \cdot in^2$

$OD_1 := 1.315in$ $\quad AO_1 := \frac{\pi}{4} \cdot OD_1^2$

$ID_1 := 1.097in$ $\quad AI_1 := \frac{\pi}{4} \cdot ID_1^2$

$OOD_1 := OD_1 + 4in$ $\quad AOO_1 := \frac{\pi}{4} \cdot OOD_1^2$ $\quad A_1 := AO_1 - AI_1 = 0.413 \cdot in^2$

Densities of Components

Weight per foot of components

$\rho_{SS} := 7500 \frac{kg}{m^3} = 0.271 \cdot \frac{lb}{in^3}$ $\quad W_{SS_1.5} := \rho_{SS} \cdot A_{1.5} = 1.994 \cdot \frac{lb}{ft}$ $\quad W_{SS_1} := \rho_{SS} \cdot A_1 = 1.343 \cdot \frac{lb}{ft}$

$\rho_{CO2} := 1000 \frac{kg}{m^3} = 0.036 \cdot \frac{lb}{in^3}$ $\quad W_{CO2} := \rho_{CO2} \cdot AI_{1.5} = 0.963 \cdot \frac{lb}{ft}$ $\quad W_{CO2.1} := \rho_{CO2} \cdot AI_1 = 0.41 \cdot \frac{lb}{ft}$

$\rho_{Ins} := 3 \frac{lb}{ft^3} = 0.0017 \cdot \frac{lb}{in^3}$ $\quad W_{Ins_1.5} := \rho_{Ins} \cdot (AOO_{1.5} - AO_{1.5}) = 0.511 \cdot \frac{lb}{ft}$ $\quad W_{Ins_1} := \rho_{Ins} \cdot (AOO_1 - AO_1) = 0.434 \cdot \frac{lb}{ft}$

Total weight of CO_2 filled, and insulated 1.5" pipe

$W_{1.5} := W_{SS_1.5} + W_{CO2} + W_{Ins_1.5} = 3.468 \cdot \frac{lb}{ft}$ $\quad W_1 := W_{SS_1} + W_{CO2.1} + W_{Ins_1} = 2.186 \cdot \frac{lb}{ft}$

Weight of particular pipe sections

$Section1 := W_{1.5} \cdot 291in = 84.097 \cdot lb$ $\quad Section4 := W_1 \cdot 962.13in = 175.304 \cdot lb$

$Section2 := W_{1.5} \cdot 262in = 75.716 \cdot lb$

$Section3 := W_1 \cdot 688in = 125.357 \cdot lb$

$Section5 := W_1 \cdot 100in = 18.22 \cdot lb$

Pipe Section 1

Each section was modeled and then analyzed in Ansys with the described boundary conditions and subjected to numerous loads, weight of pipe was included in each analysis:

1.) Temperature drop from 71.6F to -110F
2.) Internal Pressure of 1200 psig
3.) Operating Temperature of -40F and Pressure of 131 psig

Material and equipment descriptions:

Assembly 1						
Pipe size	Piece#	Description	Length shown	end 1	end 2	MAWP (psi)
1.5	1	600# flange	0.875"			1480
1.5	2	Pipe	1.88	SW-flange	SW- valve	2000
1.5	3	Valve	5			1480
1.5	4	Pipe	1	SW- valve	Butt-elbow	2000
1.5	5	elbow	r=2.25	Butt-Pipe	Butt-Pipe	2000
1.5	6	Pipe	40.44	Butt-elbow	Butt-elbow	2000
1.5	7	elbow	r=2.25	Butt-Pipe	Butt-Pipe	2000
1.5	8	Pipe	30.85	Butt-elbow	Butt-elbow	2000
1.5	9	elbow	r=2.25	Butt-Pipe	Butt-Pipe	2000
1.5	10	Pipe	183.35	Butt-elbow	Butt-elbow	2000
1	10.1	Saddle fitting				3000
1	10.2	relief valve				10000 psi burst
1	10.3	fitting	1			3000
1	10.4	Pipe	16	Butt Fitting	Butt elbow	3000
1	10.5	elbow	1.5	Butt-Pipe		3000
1.5	11	elbow	r=2.25	Butt-Pipe	Butt-Pipe	2000
1.5	12	Pipe	2.88	Butt-elbow	SW-flange	2000
1.5	13	600# flange	0.875"			1480

Physical Description / Visual representation

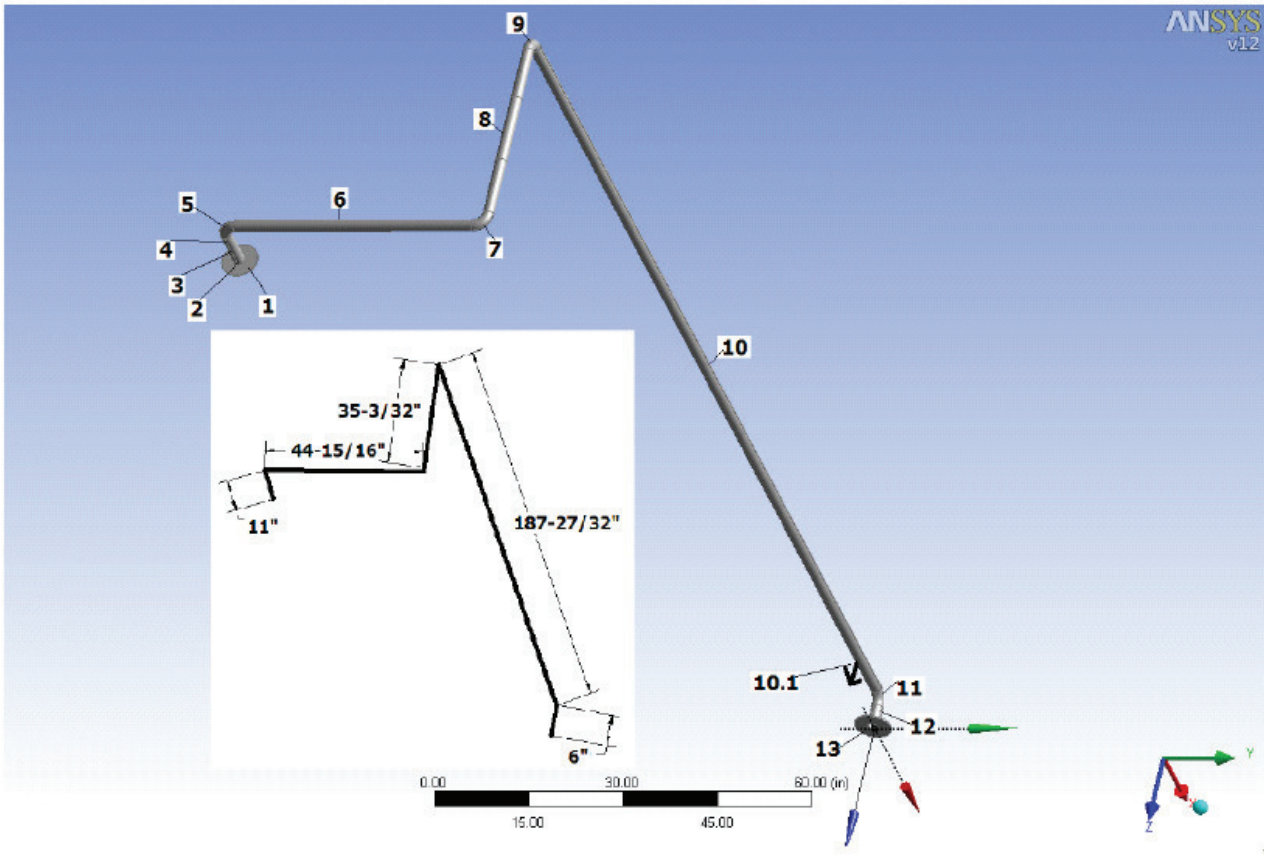

10.1 facing in Z direction **3 (Valve) handle facing "-Y" direction**

Boundary Conditions Internal Pressure

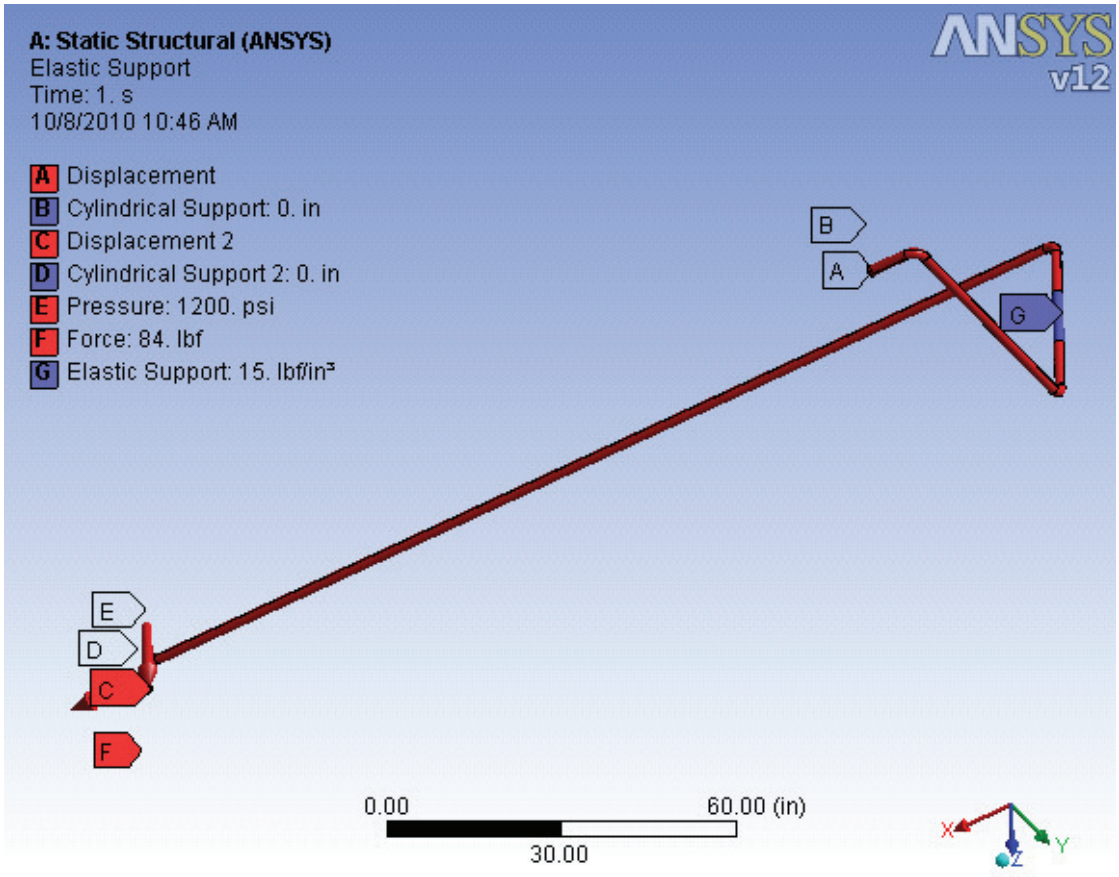

Stress Plot

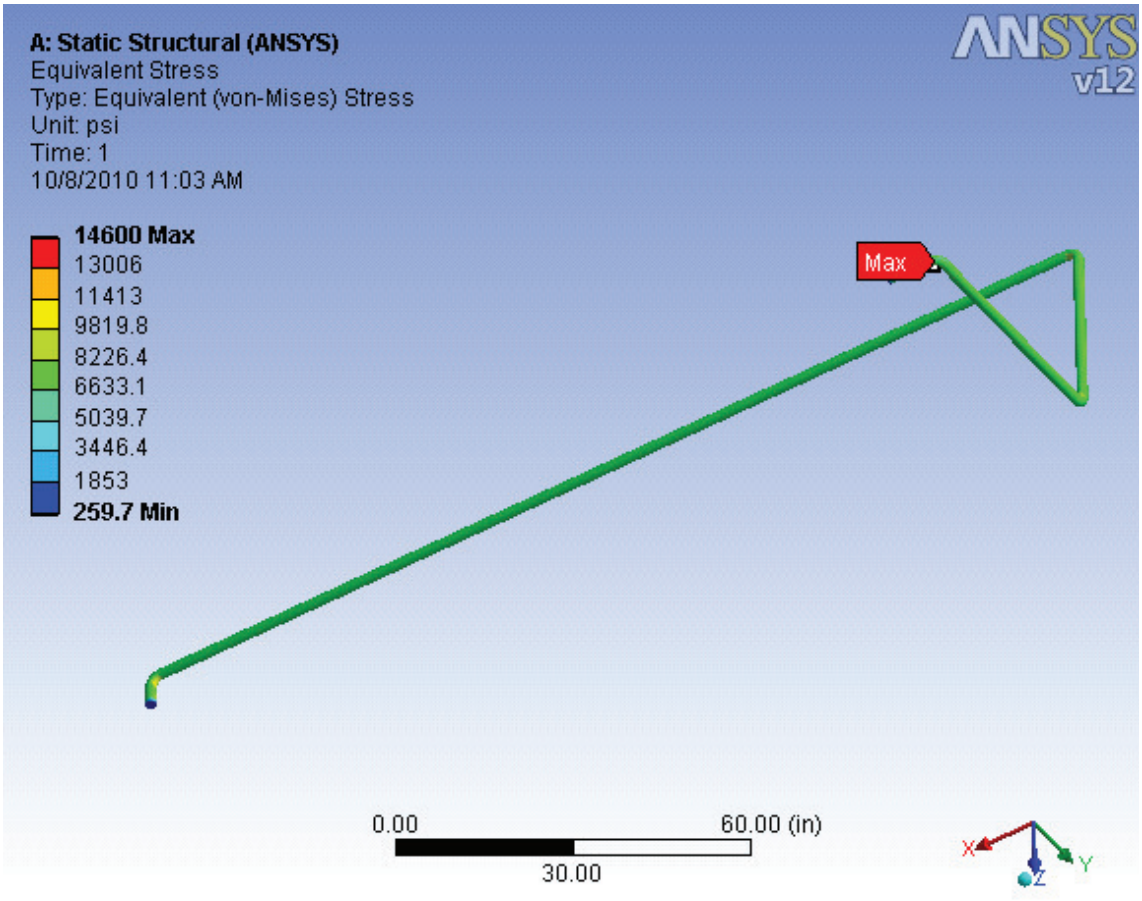

Deformation Plot

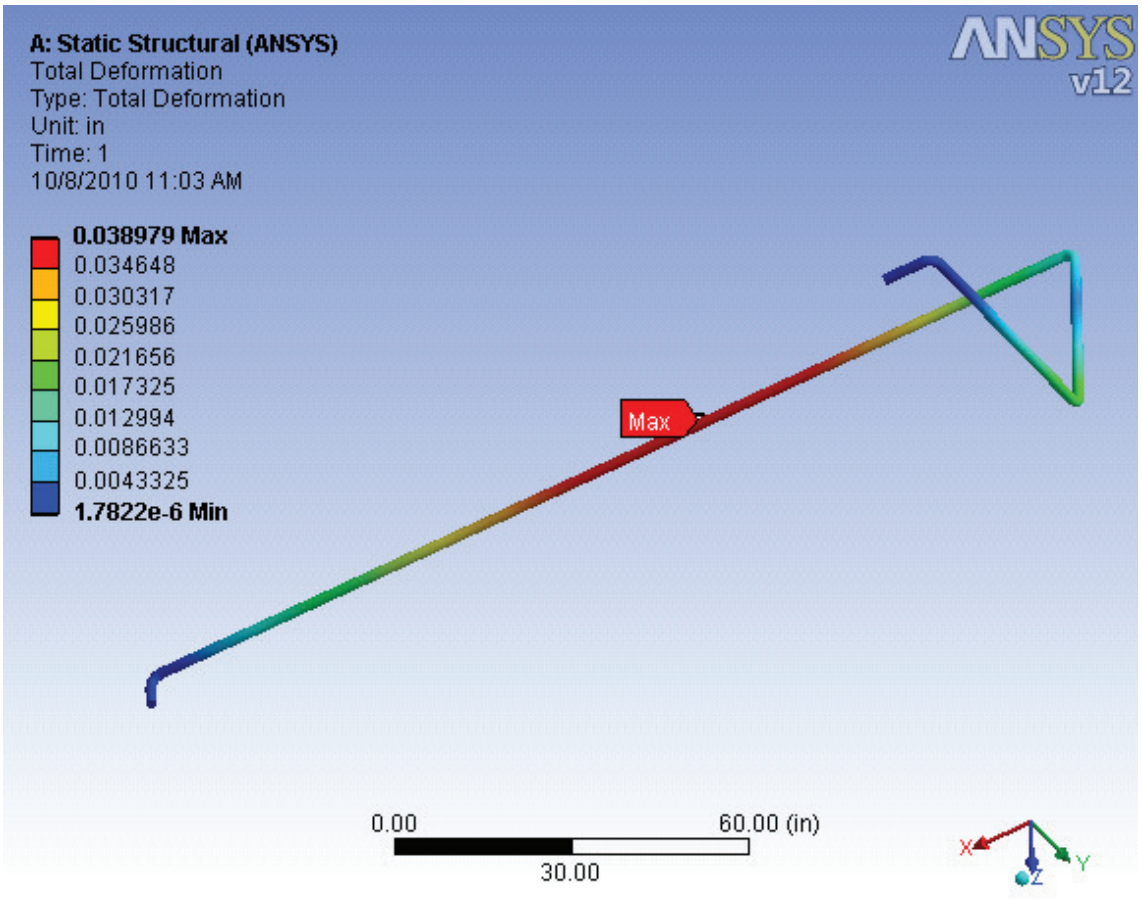

Boundary Conditions

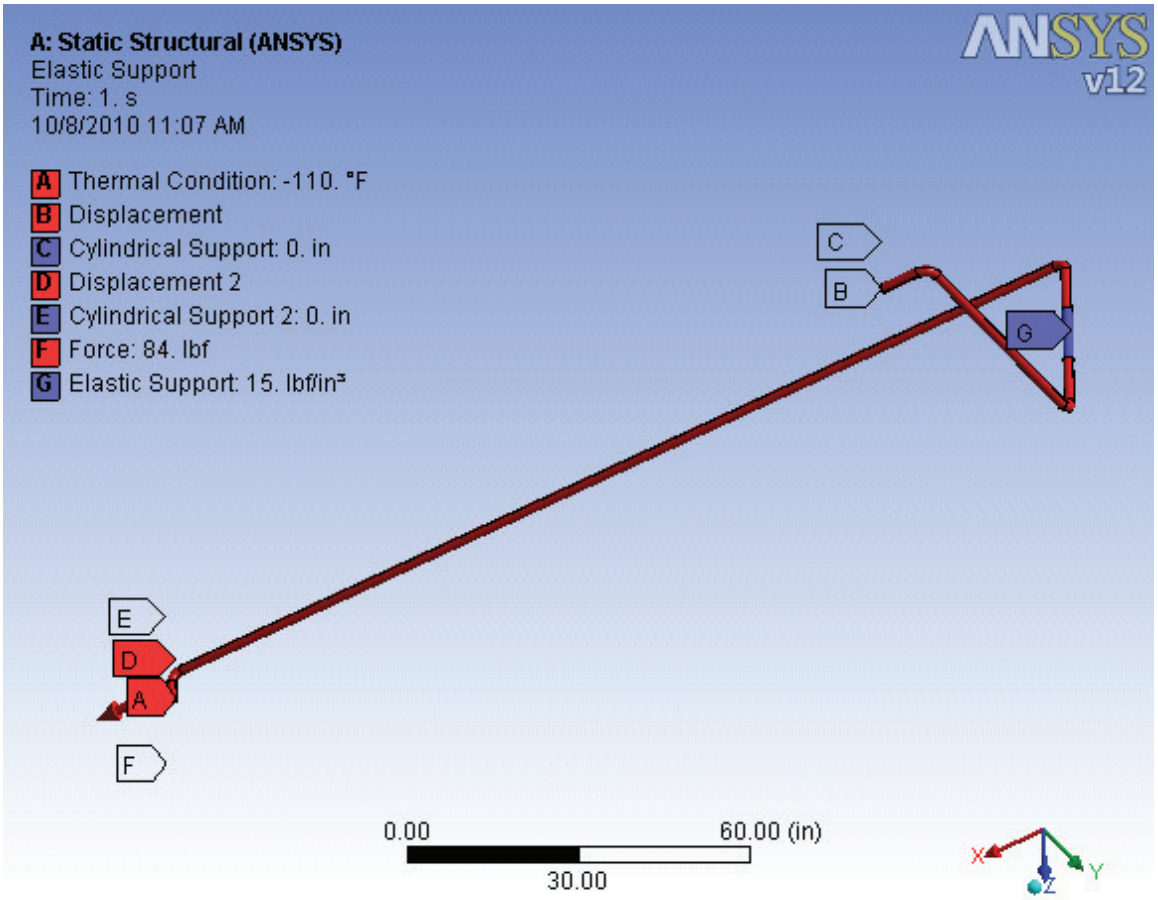

Stress Plot

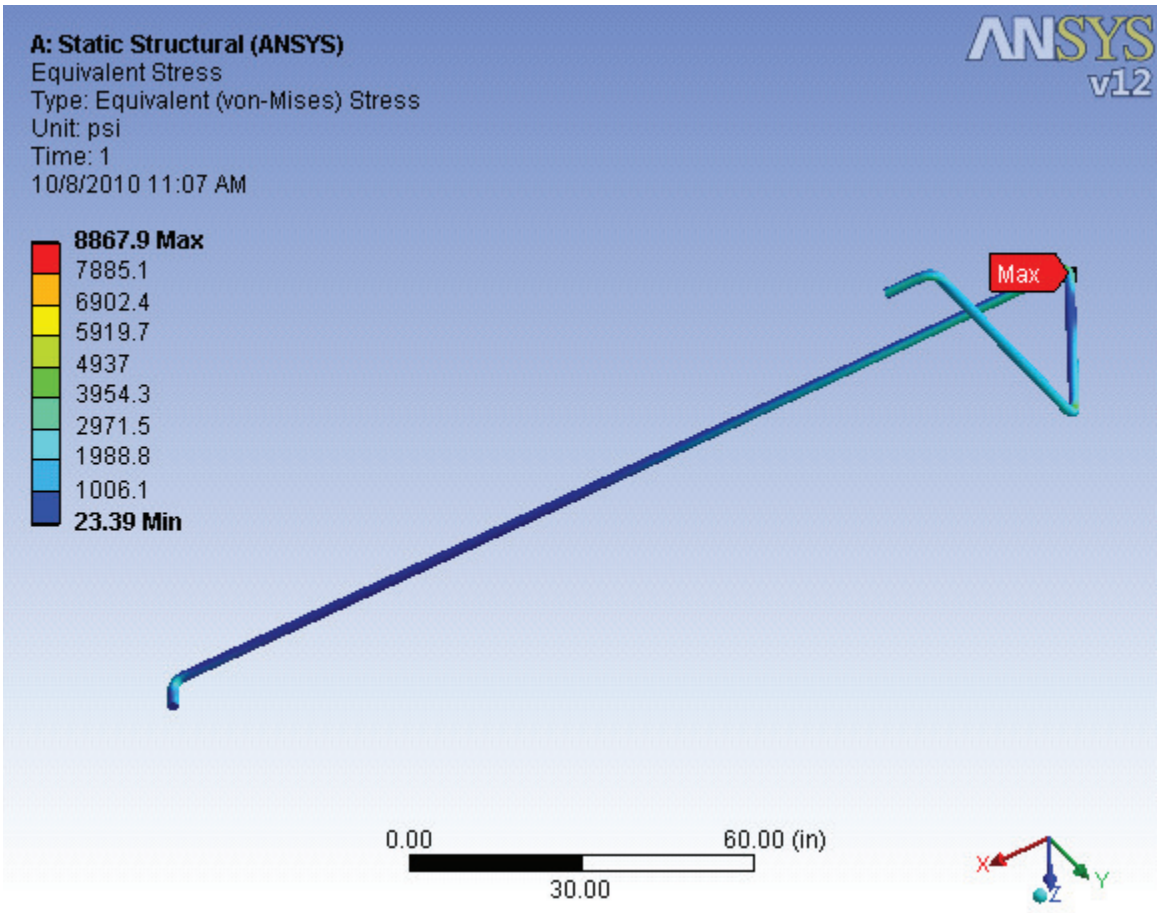

Deformation Plot

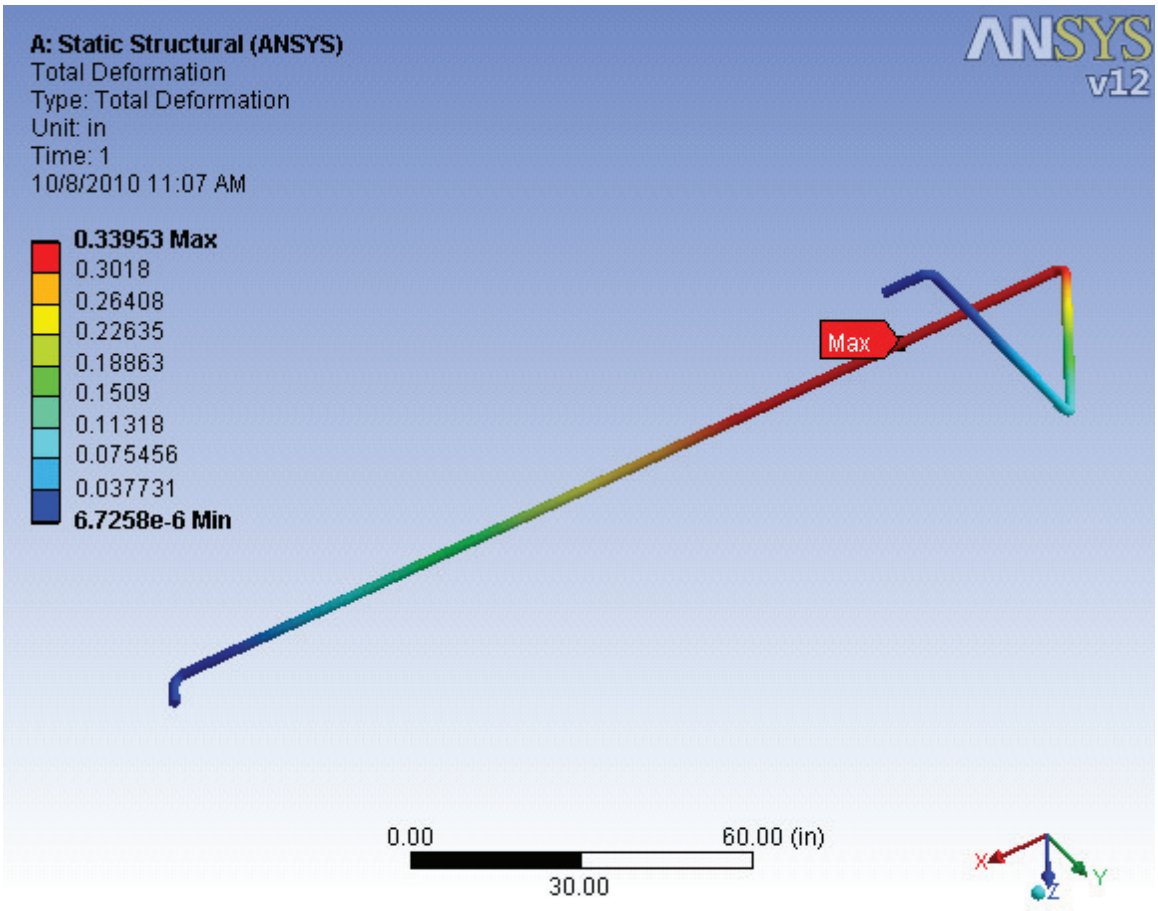

Boundary Conditions Temperature drop to -110F

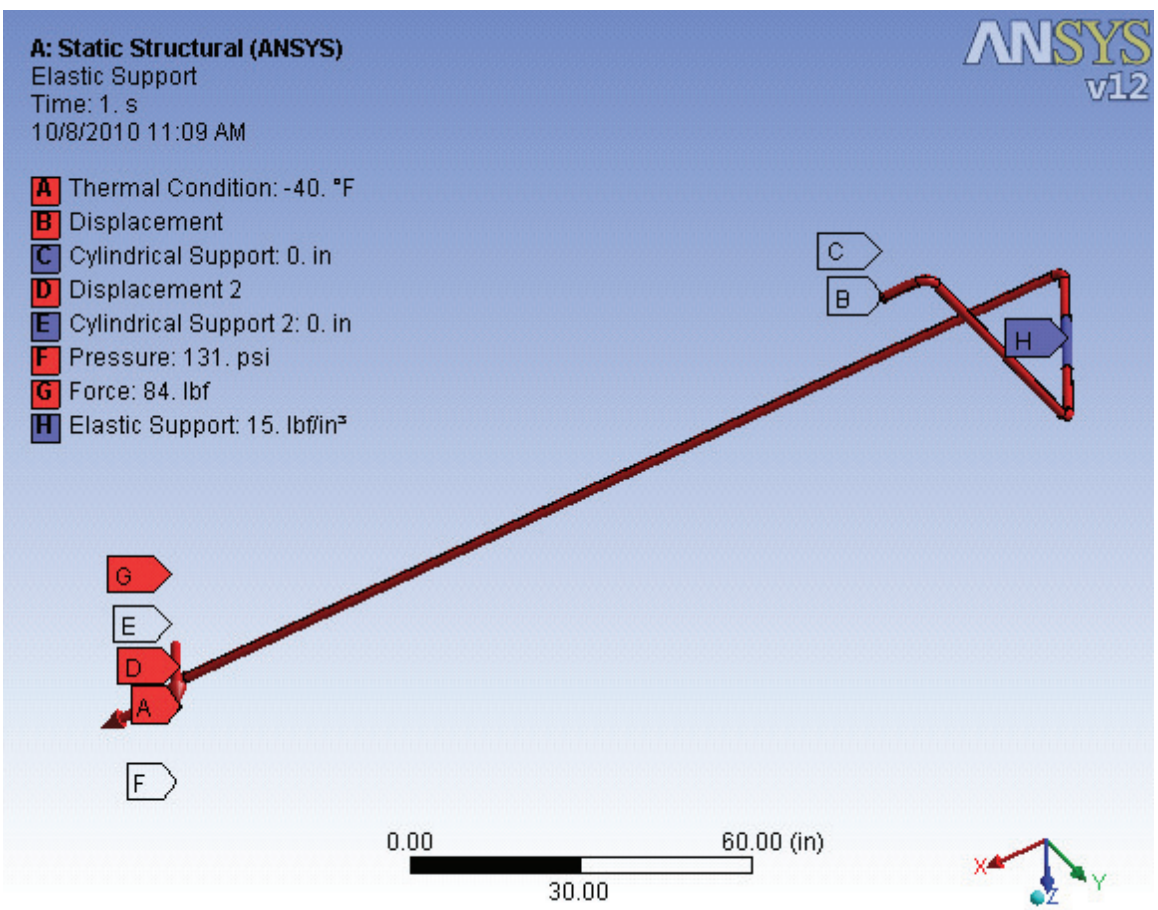

Stress Plot

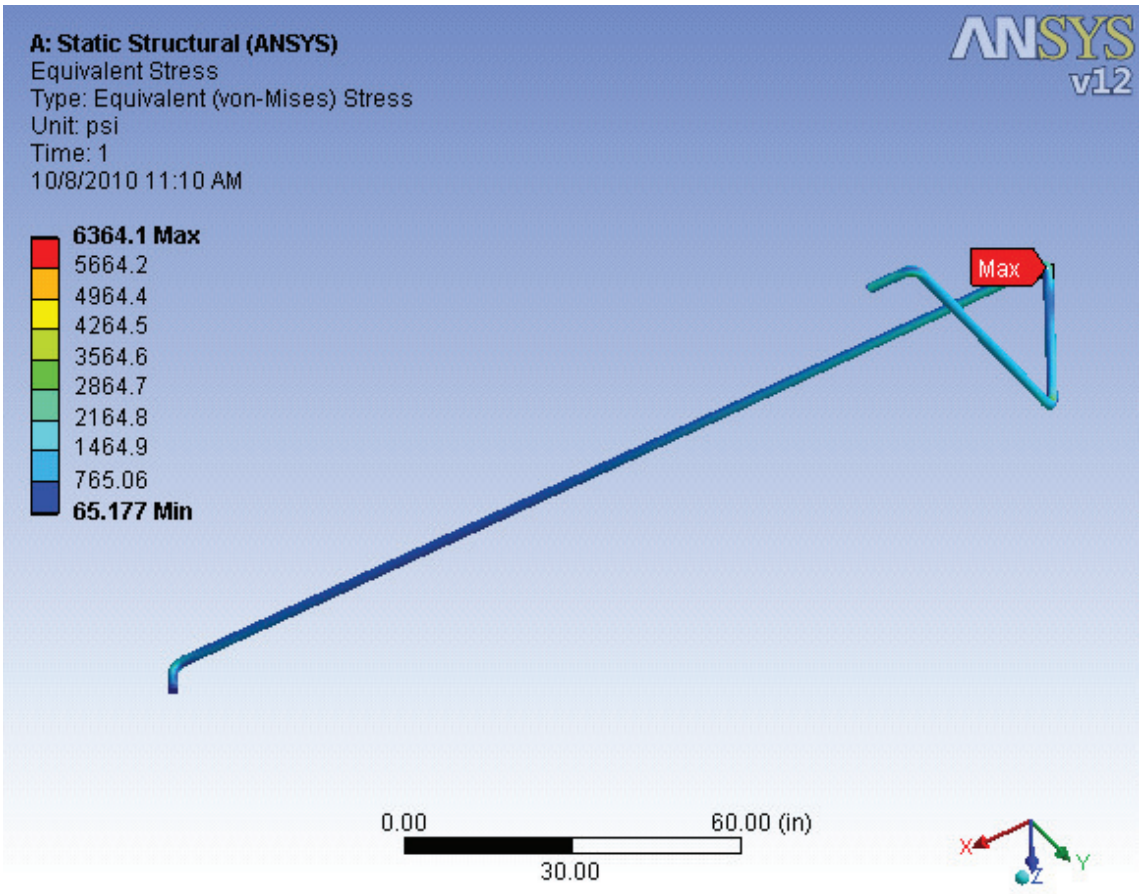

Deformation Plot

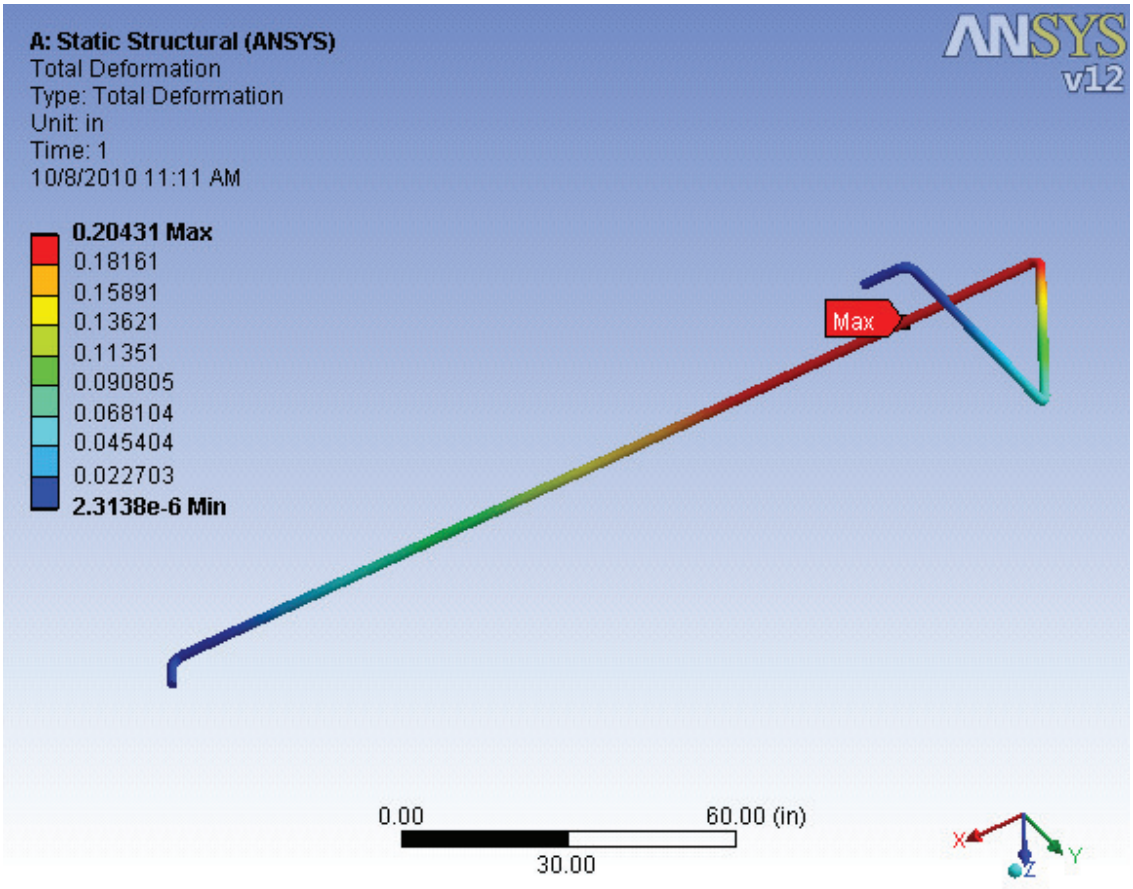

Result Summary For section #1

The stress levels fall below the allowed 16.7 ksi in ASME 31.3 process piping code. Fittings are designed thicker than the pipe itself, and are rated for the temperature and pressure and allowed by 31.3. Stress levels in the fittings should be somewhat lower than shown in the ansys model since they are modeled the same thickness as the pipe itself for a conservative approach. Deformation levels are reasonable and could easily be allowed by the pipe insulation and hangers without constraint. One can see from these results the operating temperature and pressure is low with respect to the two other extreme cases. Analysis for operating procedure will not be shown for additional pipe sections.

Pipe Section 2

Each section was modeled and then analyzed in Ansys with the described boundary conditions and subjected to numerous loads:

1.) Temperature drop from 71.6F to -110F
2.) Internal Pressure of 1200 psig

Material and Equipment description

Assembly 2						
Pipe size	Piece#	Description	Length shown	end 1	end 2	MAWP (psi)
1.5	1	600# flange	0.875"			2000
1.5	2	Pipe	8.52	SW-flange	Butt-Tee	2000
1.5	3	Tee	r=2.25	Butt-Pipe	Butt-Pipe	2000
1.5	4	Pipe	5.19	Butt-Tee	Butt-Flex	2000
0.5	4.1	Pipe saddle 1/2"		FW to piece 4	.5" Threaded	3000
0.5	4.2	threaded nipple		4.1	4.3	3000
0.5	4.3	1/2" valve		4.2	4.4	1480
0.5	4.4	1/2" pipe plug		4.3		3000
0.25	4.5	Pipe saddle 1/4"		FW to piece 4	for PDT	3000
1.5	5	Flex Hose	12	Butt-Pipe		1500
1.5	6	Strainer	5.5 inches			1480
1.5	7	Pipe	166.125	Butt-Tee	Butt-Pipe	2000
1.5	8	Tee	r=2.25	Butt-Pipe	Butt-Pipe	2000
1.5	8.1	SW coupling		SW Tee	Thermowell	3000
1.5	8.2	thermowell	TW30-1-1/2-L4-SS316			20000
1.5	9	Pipe	40.44	Butt-elbow	Butt-elbow	2000
1.5	10	elbow	r=2.25	Butt-Pipe	Butt-Pipe	2000
1.5	11	Pipe	1	Butt-elbow	SW- valve	2000
1.5	12	Valve	5			1480
1.5	13	Pipe	0.9	SW- valve	SW-flange	2000
1.5	14	600# flange	0.875"			1480

Physical Description / Visual representation

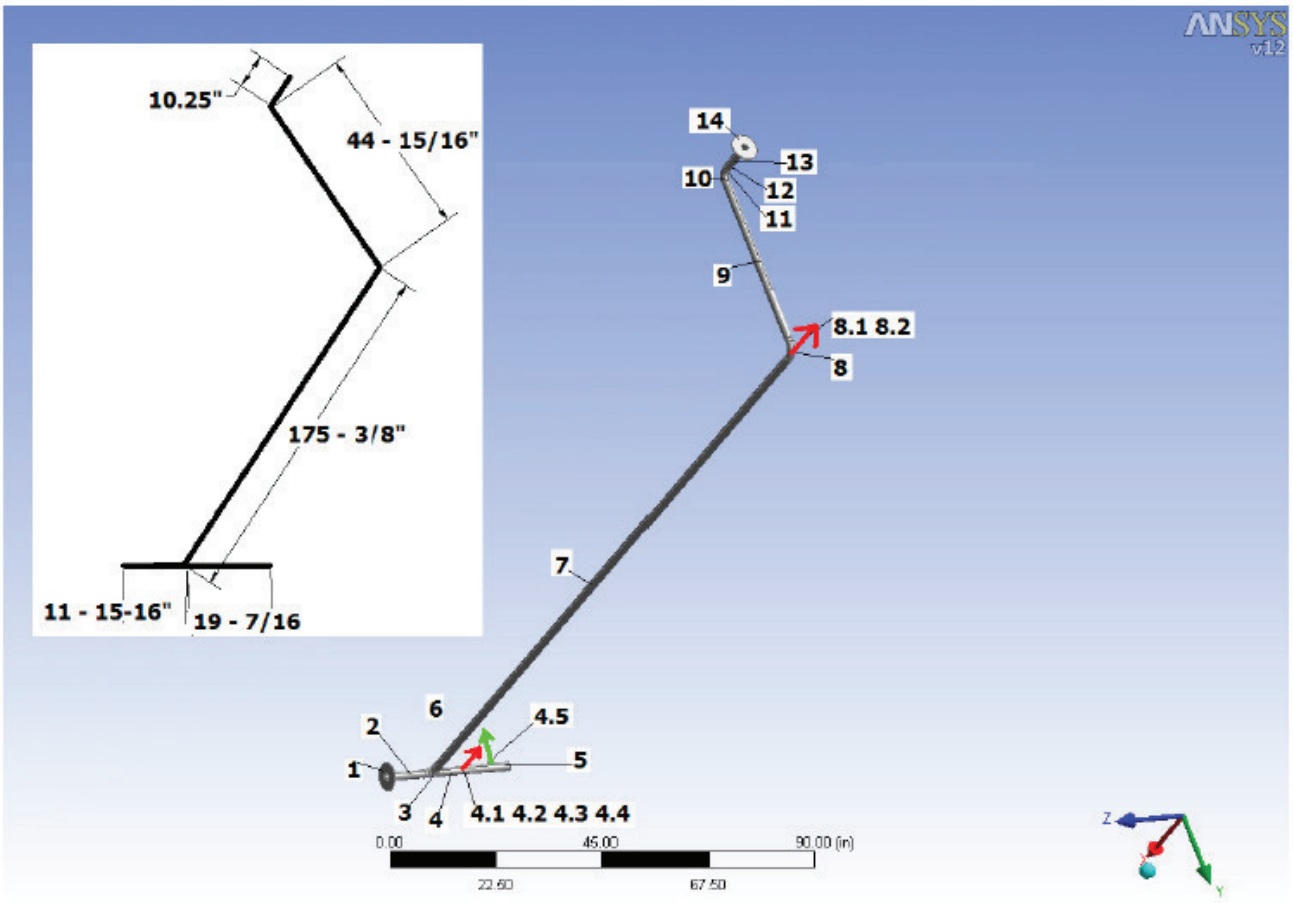

4.1,2,3,4 facing up "-X" direction

4.5 facing "-Y" direction

8.1,2 facing up "-X" direction

Boundary Conditions Internal Pressure

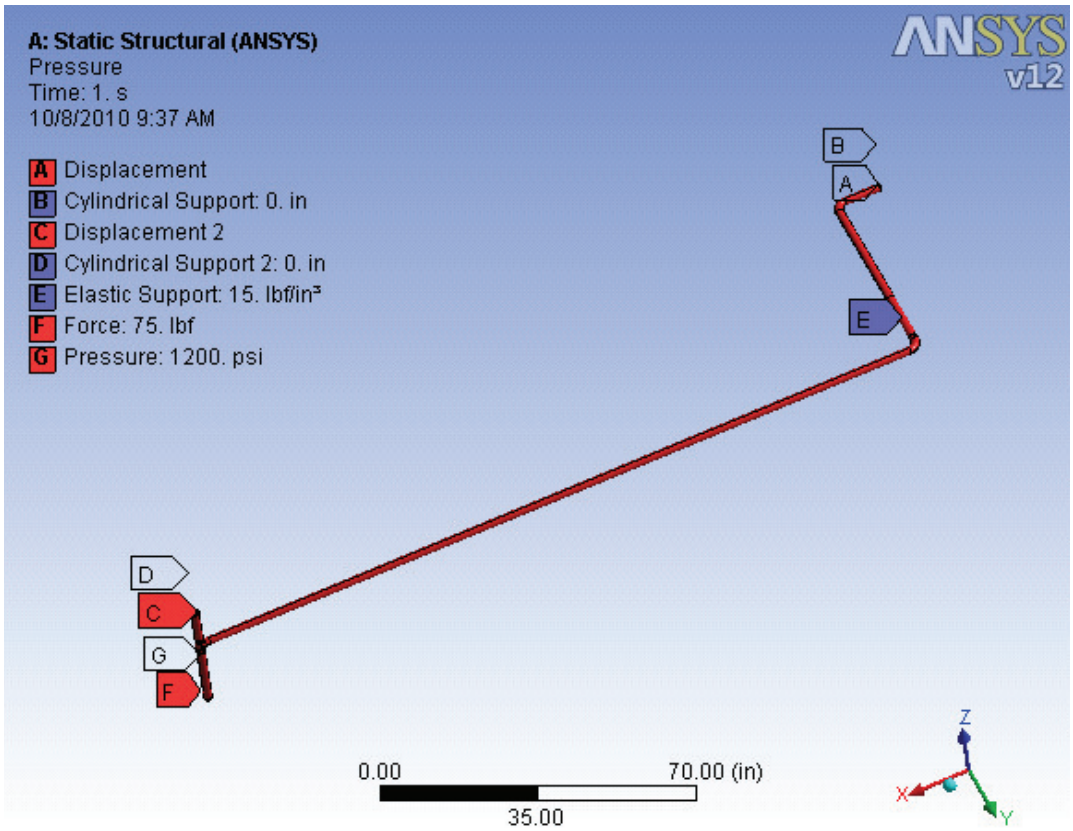

Stress Plot

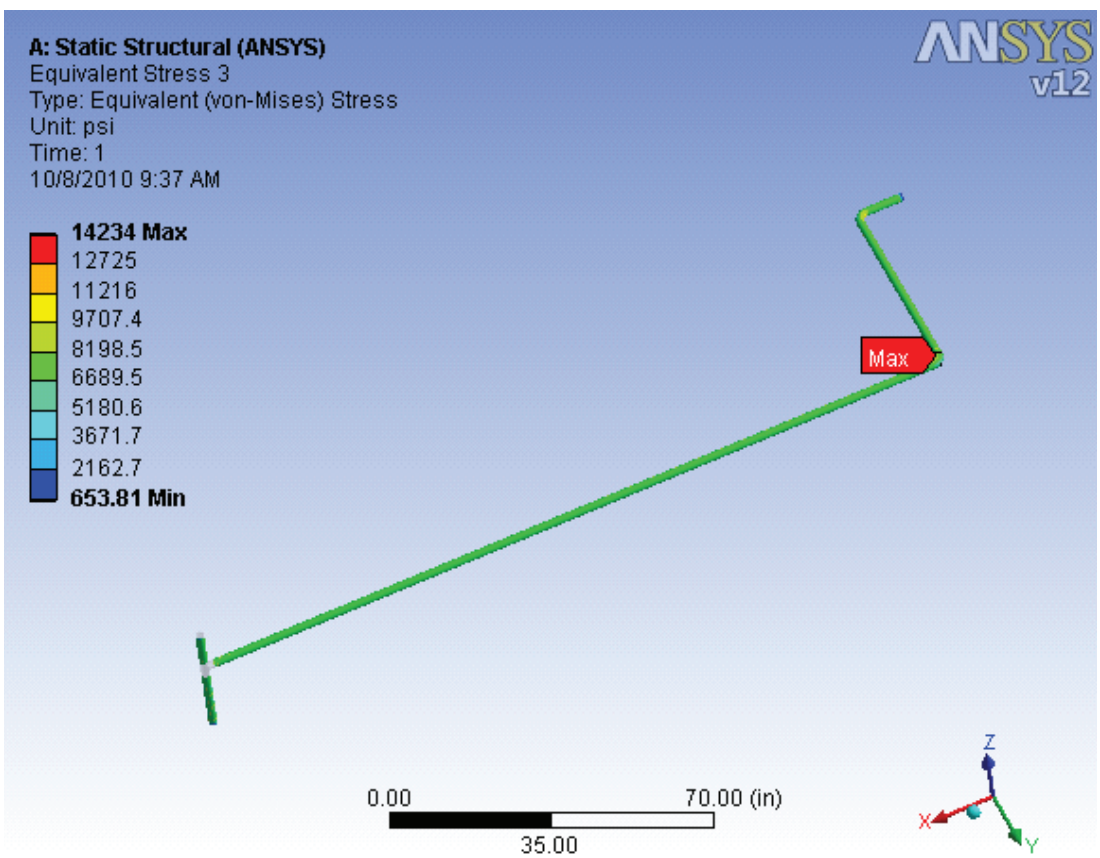

Deformation Plot

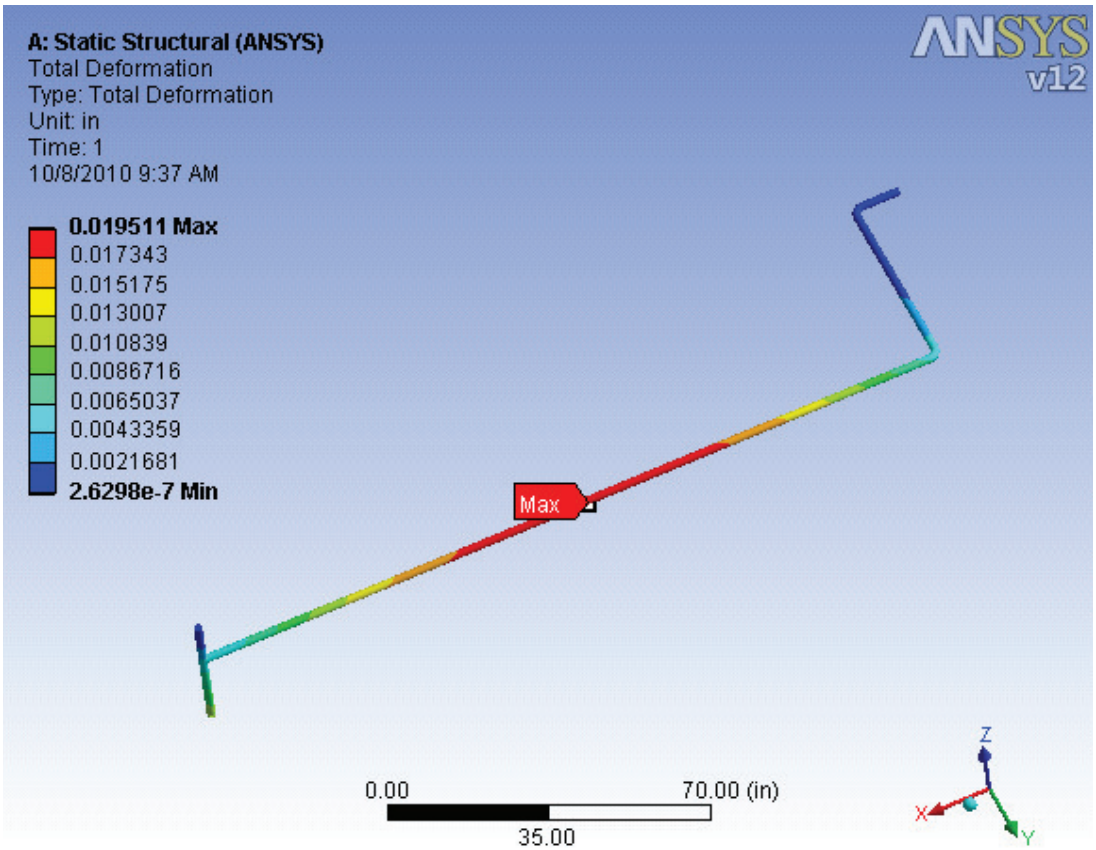

Boundary Conditions Temperature drop to -110F

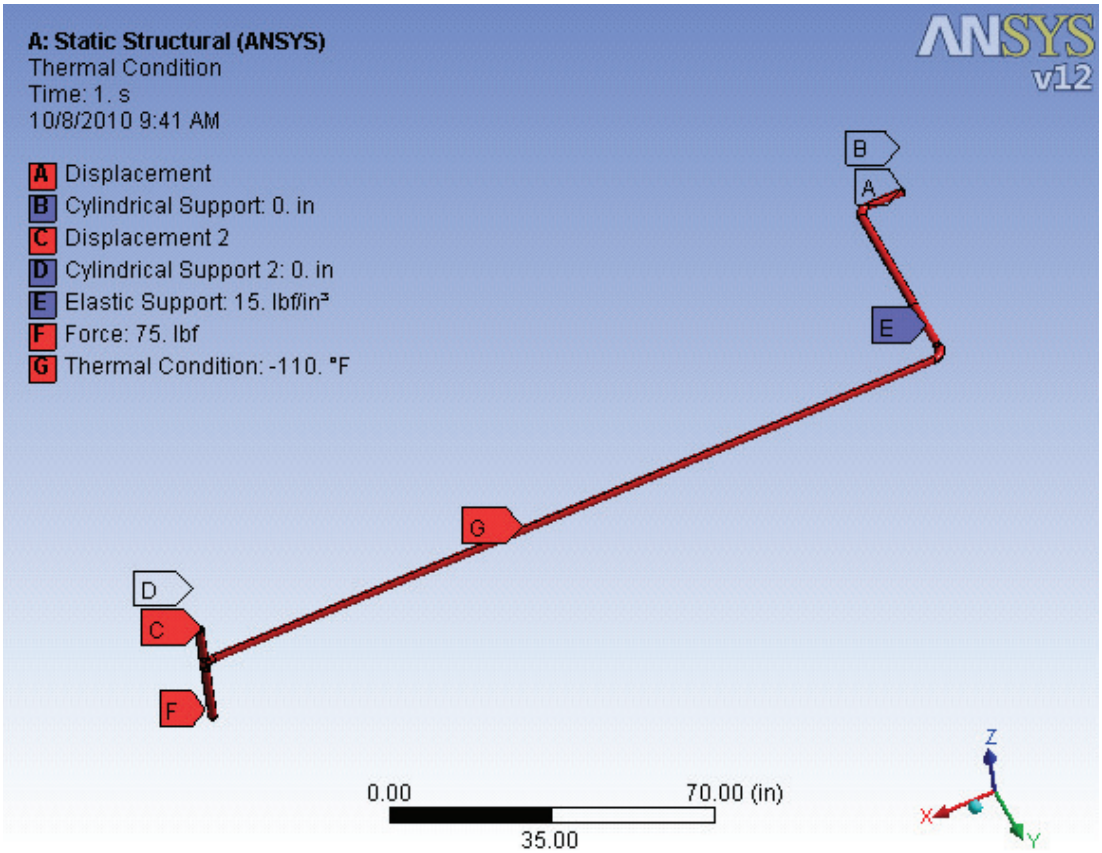

Stress Plot

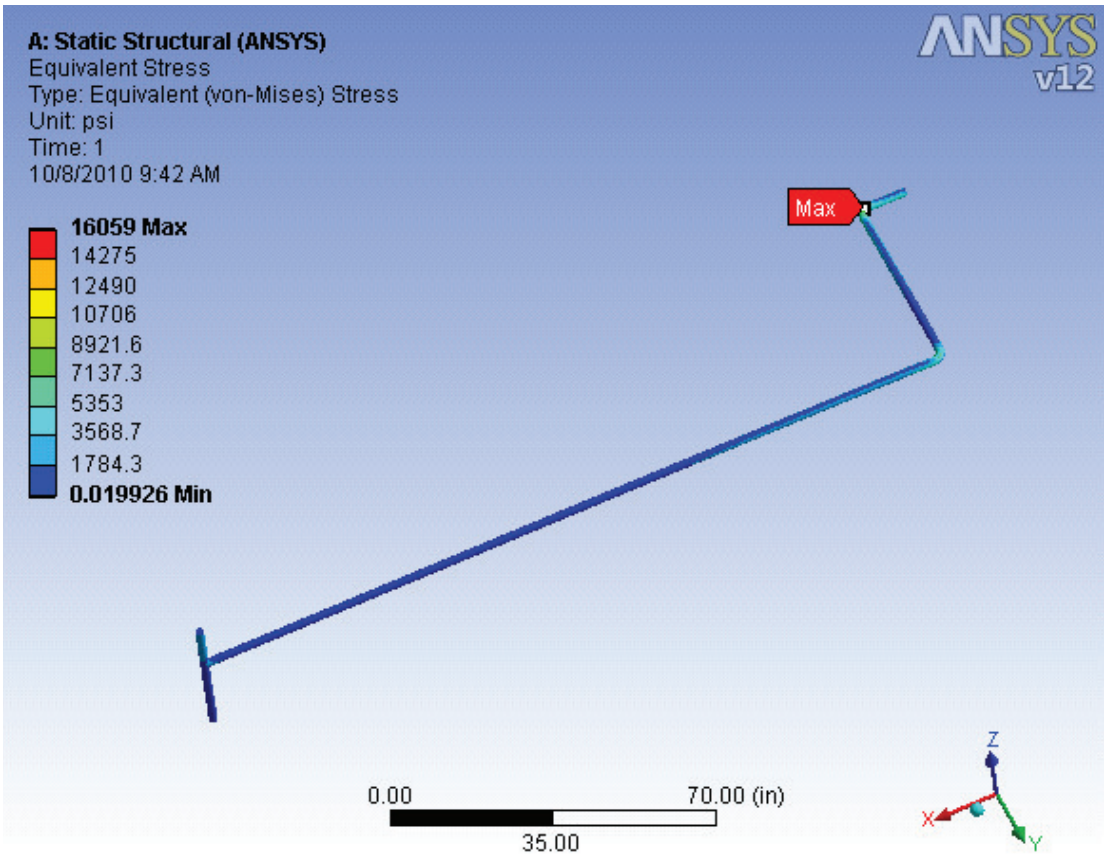

Deformation Plot

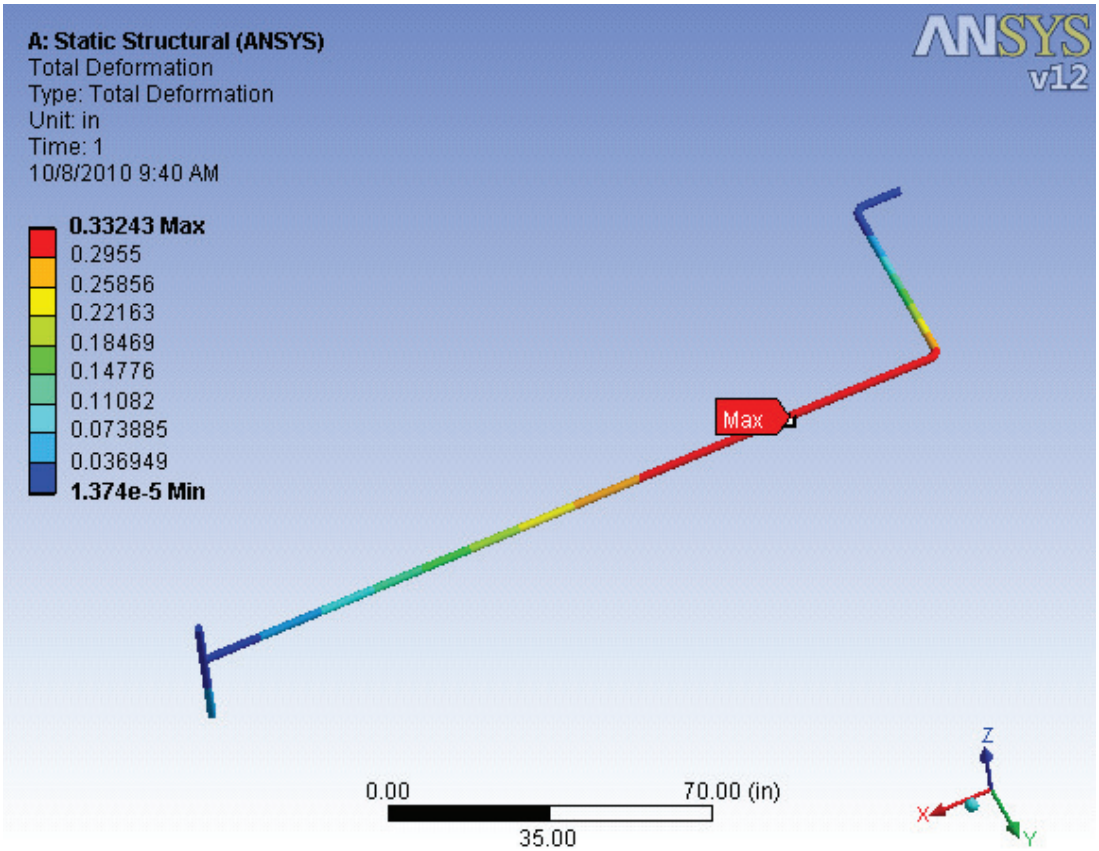

Result Summary For section #2

The stress levels fall below the allowed 16.7 ksi in ASME 31.3 process piping code. Fittings are designed thicker than the pipe itself, and are rated for the temperature and pressure and allowed by 31.3. Stress levels in the fittings should be somewhat lower than shown in the ansys model since they are modeled the same thickness as the pipe itself for a conservative approach. The pipe Tee was left out of the stress plot in the pressure analysis since it is rated to the temperature and pressure for ASME31.3. Deformation levels are reasonable and could easily be allowed by the pipe insulation and hangers without constraint.

Pipe Section 3

Pipe section 3 is two assemblies joined by a Hart union. The two were joined in an assembly and the model was then analyzed in Ansys with the described boundary conditions and subjected to numerous loads:

1.) Temperature drop from 71.6F to -110F
2.) Internal Pressure of 1200 psig

Pipe and equipment descriptions

Assembly 6 - return line 1						
Pipe size	Piece#	Description	Length shown	end 1	end 2	MAWP (psi)
1.5	1	flange	1.125	Vessel		1480
1.5	2	Pipe	1	SW flange	SW valve	2000
5	3	valve	5			1480
1.5 to 1	4	reducer	2.5	SW Valve	Butt-Pipe	2000
1	5	Pipe	12.625	Butt-Reducer	Butt-elbow	3000
1	6	elbow	1.5			3000
1	7	Pipe	263	Butt-elbow	SW Union	3000
1 to 3/4	7.1	saddle ftng (3/4)			relief Valve	3000
.75	7.2	relief valve				2000
1	7.3	fitting	1			3000
1	7.4	Pipe	63	Butt Fitting	Butt elbow	3000
1	7.5	elbow	1.5	Butt-Pipe	Outside	3000
1	8	SW union Thrd End			(Assm 8)	3000

Assembly 8 - return line						
Pipe size	Piece#	Description	Length shown	end 1	end 2	MAWP (psi)
1	1	Union Nut End		(Assm 6)		3000
1	2	Pipe	113.87	Butt-pipe	Butt-elbow	3000
1	3	elbow		Butt-Pipe	Butt-Pipe	3000
1	4	Pipe	17.5	Butt-elbow	Butt-elbow	3000
1	5	elbow		Butt-Pipe	Butt-Pipe	3000
1	6	Pipe	256	Butt-elbow	Butt-elbow	3000
1	7	elbow		Butt-Pipe	Butt-Pipe	3000
1	8	Pipe	3	Butt-elbow	SW Union	3000
1	9	Union TE	2.25/2	Piece 19	(to Assm 7)	3000

Boundary Conditions Temperature drop to -110F

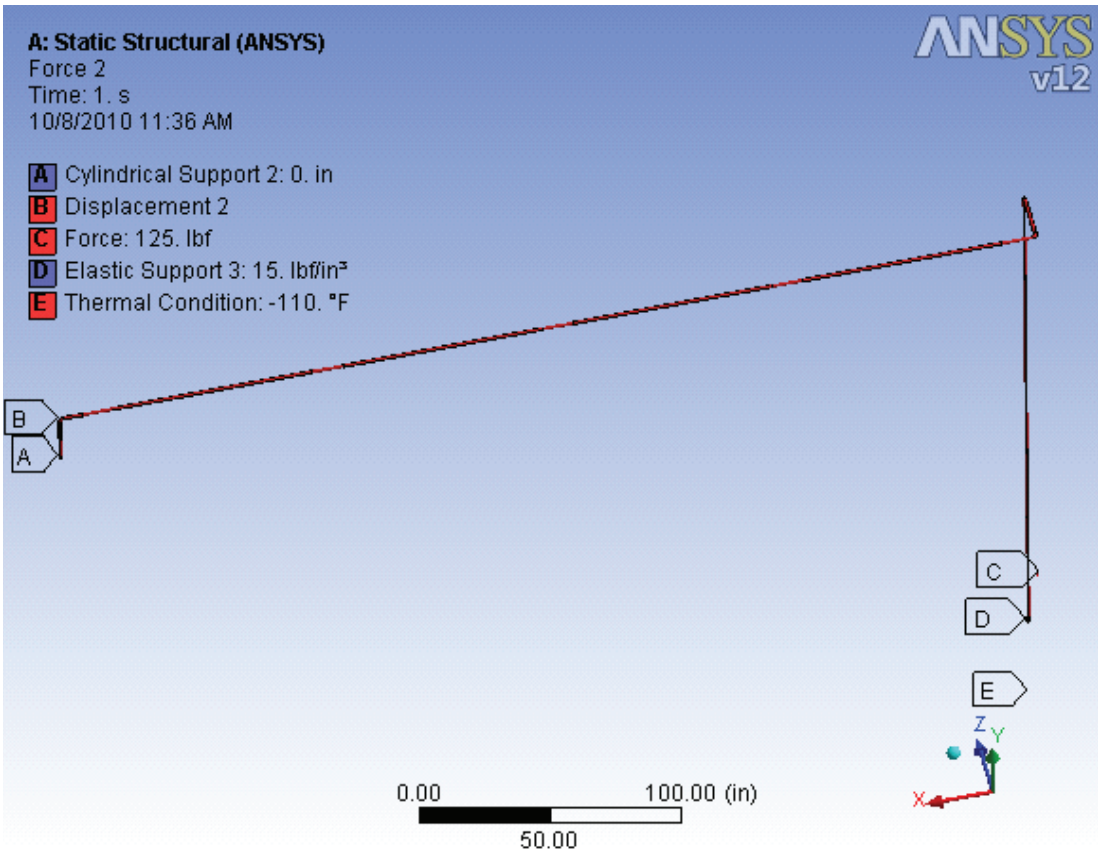

Stress Plot

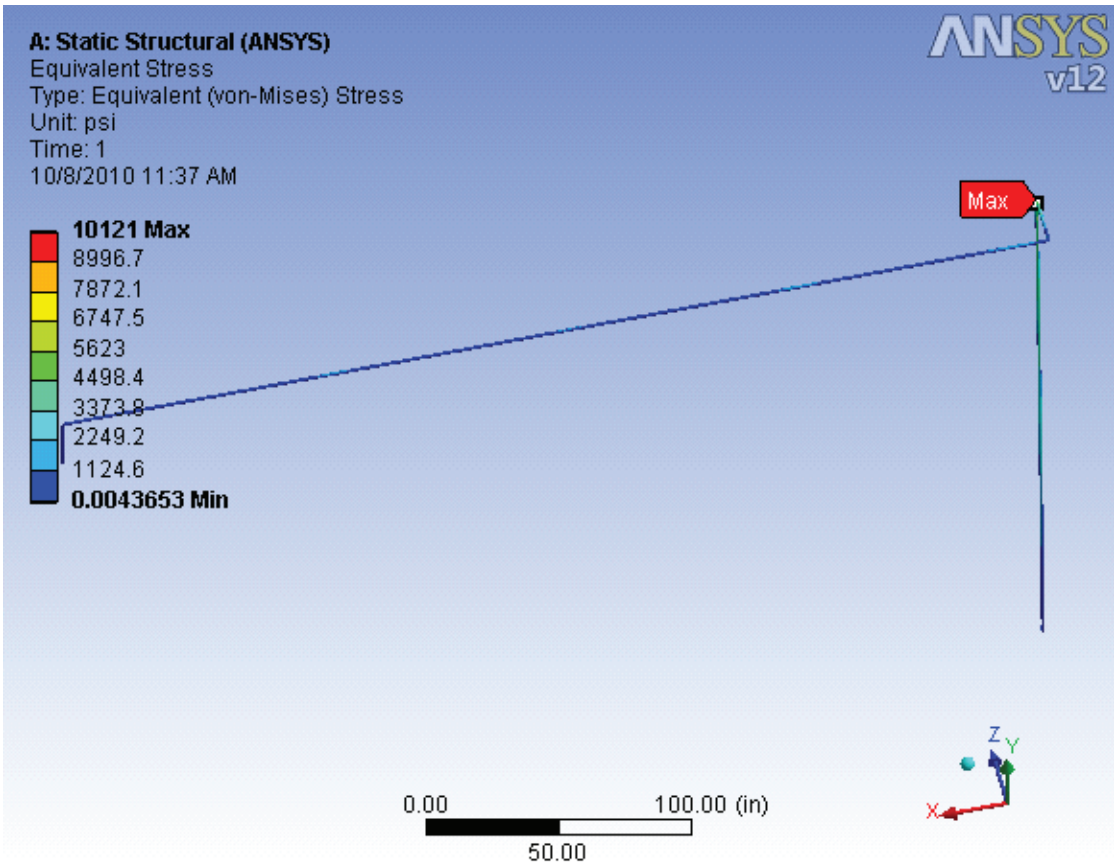

Deformation Plot

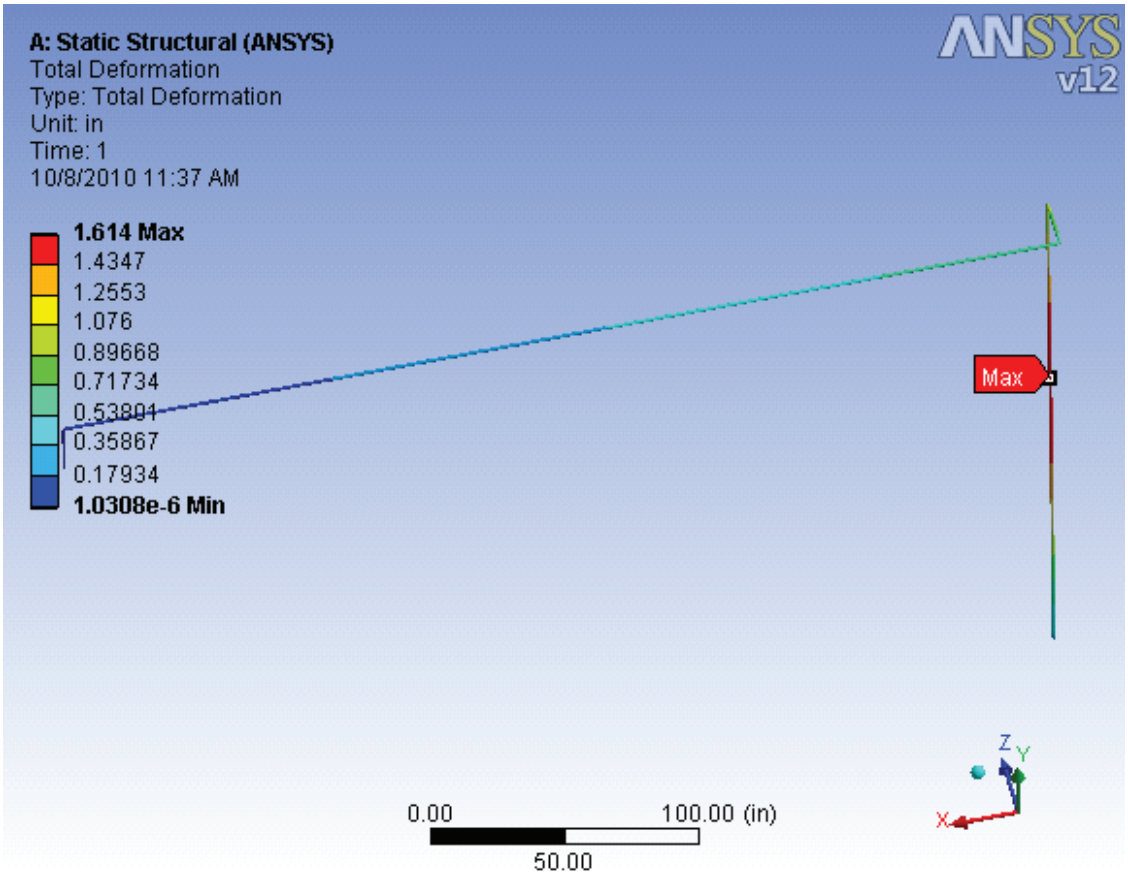

Boundary Conditions Internal Pressure

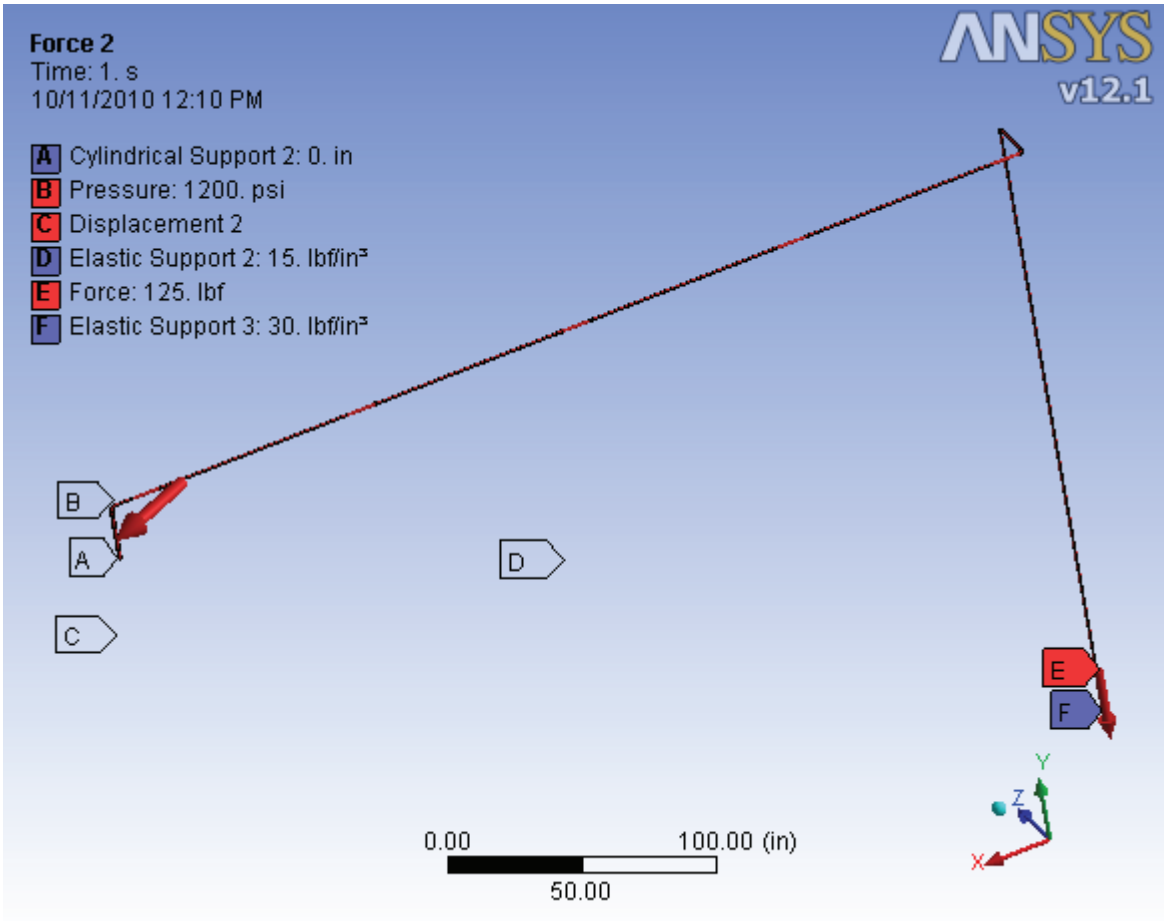

Stress Plot

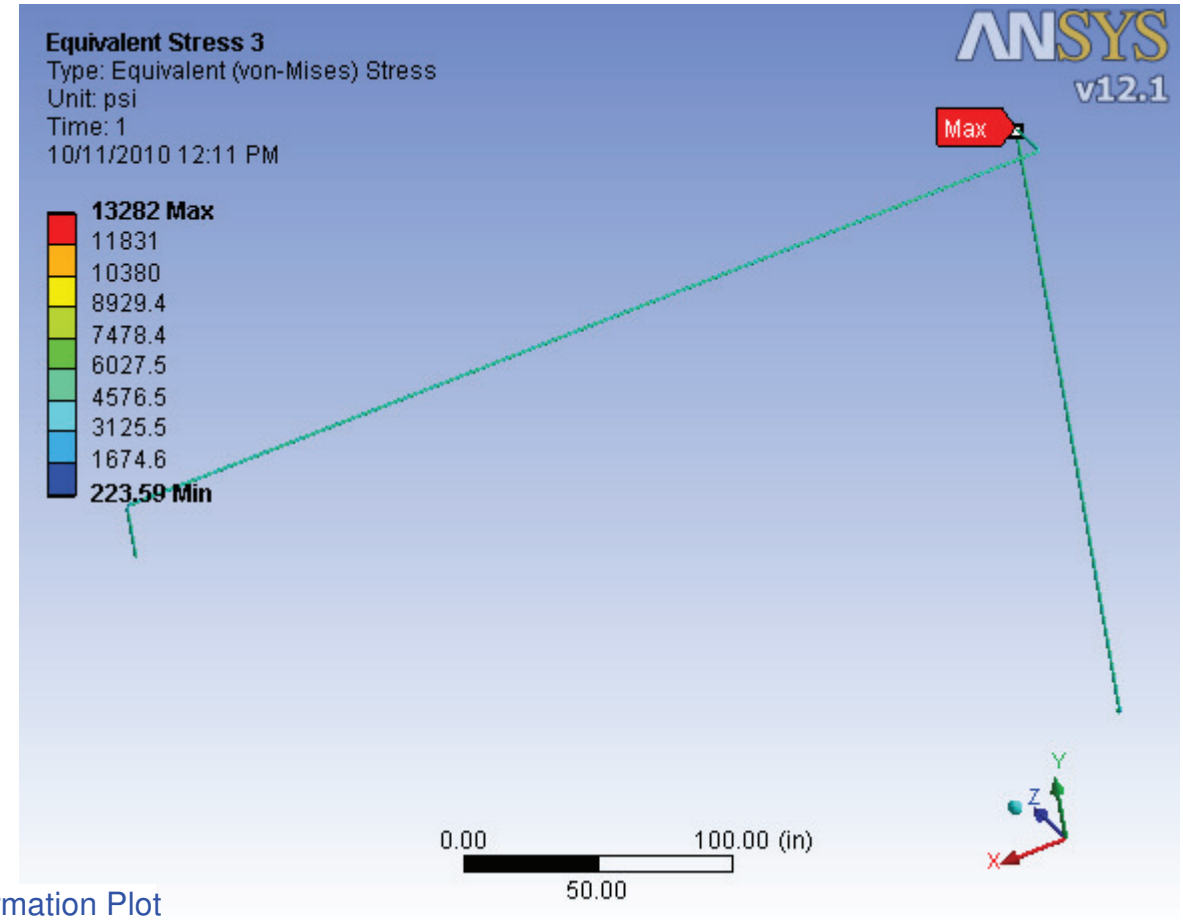

Deformation Plot

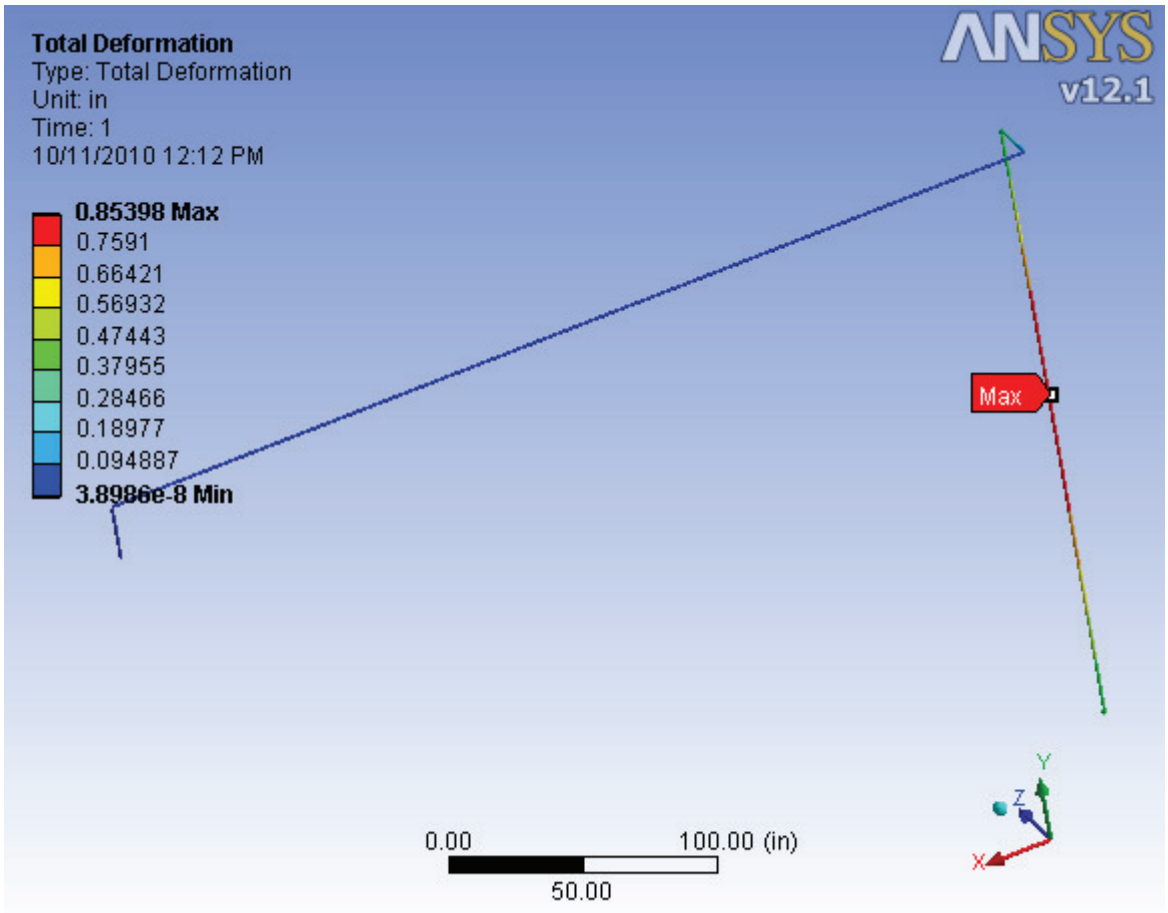

Pipe Section 4

Pipe section 4 is two assemblies joined by a welding. The two were joined in an assembly and the model was then analyzed in Ansys with the described boundary conditions and subjected to numerous loads:

1.) Temperature drop from 71.6F to -110F
2.) Internal Pressure of 1200 psig

Pipe and equipment descriptions

Assembly 3 - out of pump						
Pipe size	Piece#	Description	Length shown	end 1	end 2	MAWP (psi)
1.5 to 1	1	Flex Hose	16 - 5/16	Butt-Elbow		1500
	1.1	Pipe saddle 1/4"		Piece 1 reducer	tp PDT	3000
1	2	elbow	r=1.5	Butt-Pipe	Butt-Pipe	3000
1	3	Pipe	9.06	Butt-elbow	Butt-elbow	3000
1	4	elbow	r=1.5	Butt-Pipe	Butt-Pipe	3000
1	5	Pipe	5	Butt-elbow	SW strainer	3000
1	6	check valve	5			1480
1	7	Pipe	120.29	SW strainer	Butt-Tee	3000
	7.1	Pipe saddle 1"	~57" from CV	Piece 7	Relief valve	3000
1	7.2	relief valve				10000 psi burst
1	7.3	fitting	1			3000
1	7.4	Pipe	16	Butt Fitting	Butt elbow	3000
1	7.5	elbow	1.5	Butt-Pipe	Outside	3000
1	8	Tee	r=1.5	Butt-Pipe	Butt-Pipe	3000
1	9	Pipe	62.54	Butt-Tee	Butt-elbow	3000
1	10	elbow	r=1.5	Butt-Pipe	Butt-Pipe	3000
1	11	Pipe	282.16 (two	Butt-elbow	Butt-Pipe	3000
1	11.1	Pipe	pieces)	Butt-Pipe	Butt-elbow	3000
1	12	elbow	r=1.5	Butt-Pipe	Butt-Pipe	3000
1	13	Pipe	158.55	Butt-elbow	Butt-elbow	3000
1	14	elbow	r=1.5	Butt-Pipe	Butt-Pipe	3000
1	15	Pipe	92.88	Butt-elbow	Butt-elbow	3000
1	16	elbow	r=1.5	Butt-Pipe	Butt-Pipe	3000
1	17	Pipe	1.68	Butt-elbow	Butt-elbow	3000
1	18	elbow	r=1.5	Butt-Pipe	Butt-Pipe	3000
1	19	Pipe	3	Butt-elbow	SW Union	3000
1	20 TE	Union TE	2.25/2	Piece 19	(to Assm 5)	3000

Assembly 4 - out of Pump Pipe back to vessel dead head line						
Pipe size	Piece#	Description	Length shown	end 1	end 2	MAWP (psi)
1 to .75	1	reducer	2	Butt T (Assm3)	Butt-reducer	3000
.75 to .5	2	reducer	1.5	Butt-reducer	Butt-Pipe	3000
0.5	3	Pipe	58.75	Butt-reducer	Butt-elbow	3000
0.5	4	elbow	r = 1.5	Butt-Pipe	Butt-Pipe	3000
0.5	5	Pipe	18.09	Butt-elbow	Butt-elbow	3000
0.5	6	elbow	r = 1.5	Butt-Pipe	Butt-Pipe	3000
0.5	7	Pipe	58.57	Butt-elbow	Butt-elbow	3000
0.5	8	elbow	r = 1.5	Butt-Pipe	Butt-Pipe	3000
0.5	9	Pipe	22.5	Butt-elbow	Butt-elbow	3000
0.5	10	elbow	r = 1.5	Butt-Pipe	Butt-elbow	3000
0.5	11	45 degree elbow	r = 1.5	Butt-elbow	Butt-Pipe	3000
0.5	12	Pipe	10	Butt-elbow	SW Union	3000
0.5	13	hart union	2			3000
0.5	14	Thrd Pipe (cut in 1/2)	2.5	SW union	Valve	3000
0.5	15	1/2" valve	2.78	Thrd Pipe	reduc nipple	1480
.5 to .75	16	reducing nipple	0.25	valve	vessel port 1	6600

Boundary Conditions Temperature drop to -110F

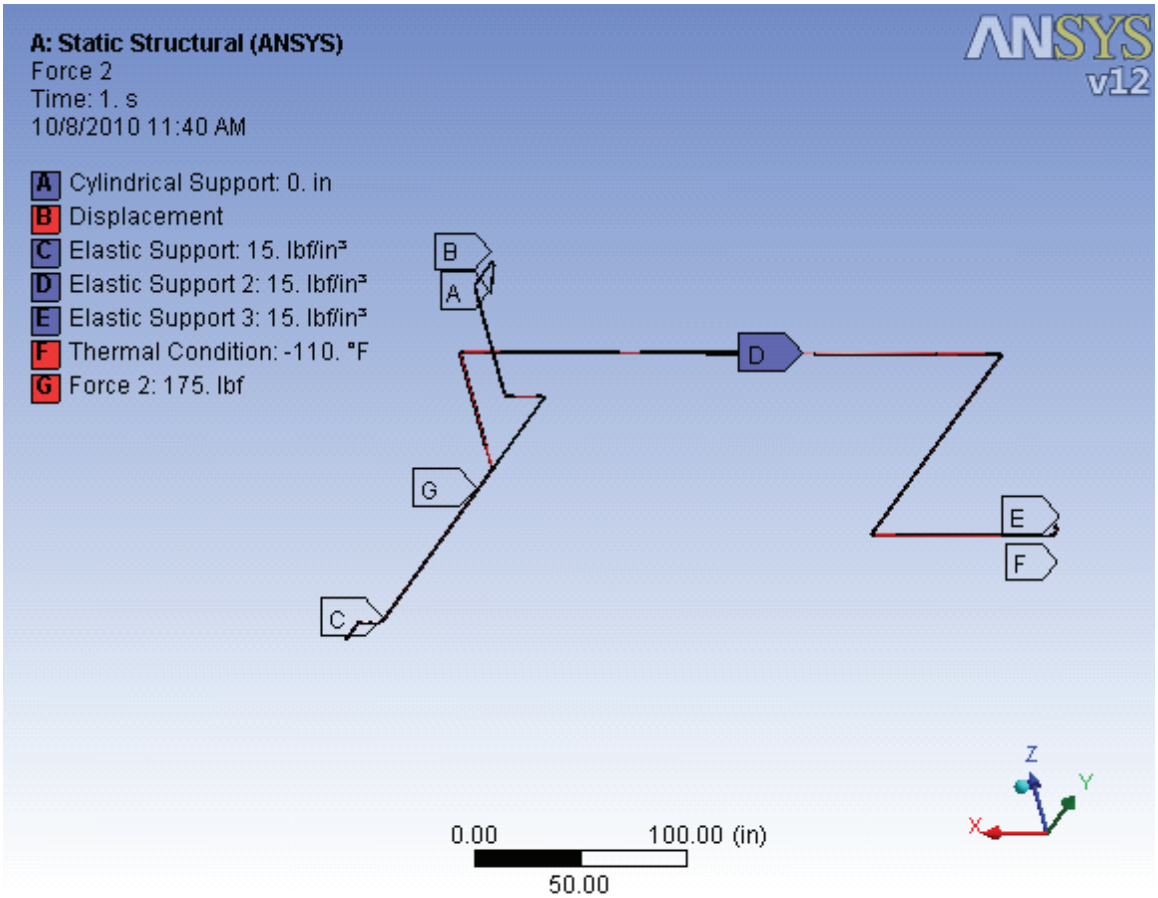

Stress Plot

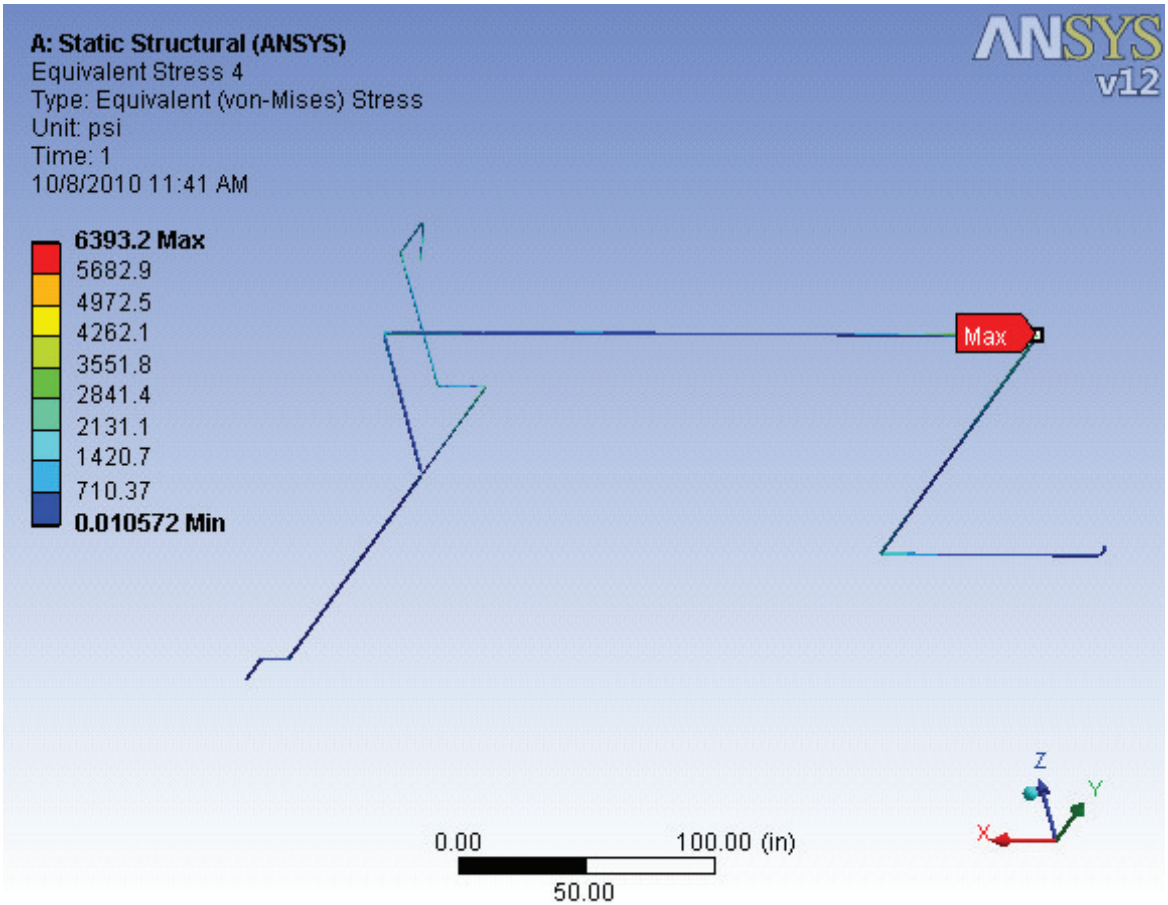

Deformation Plot

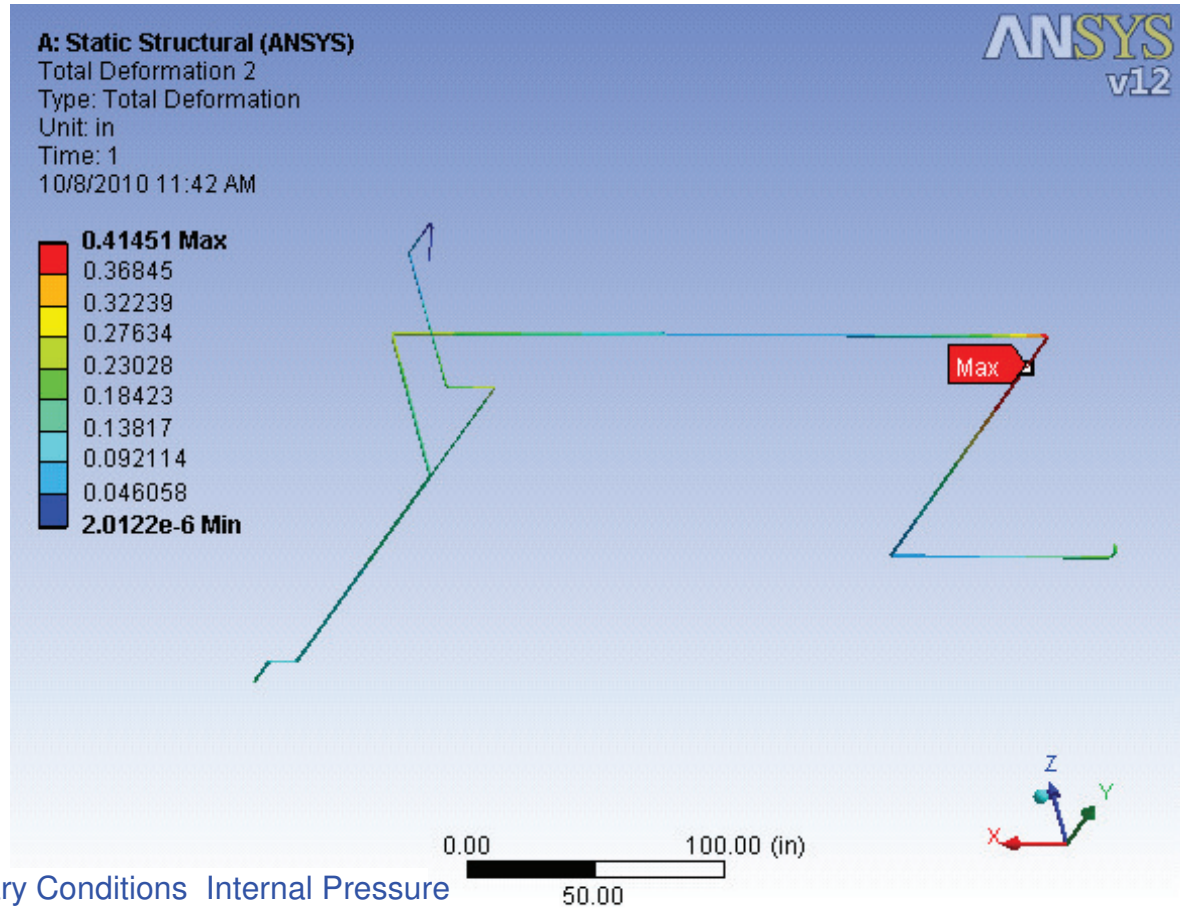

Boundary Conditions Internal Pressure

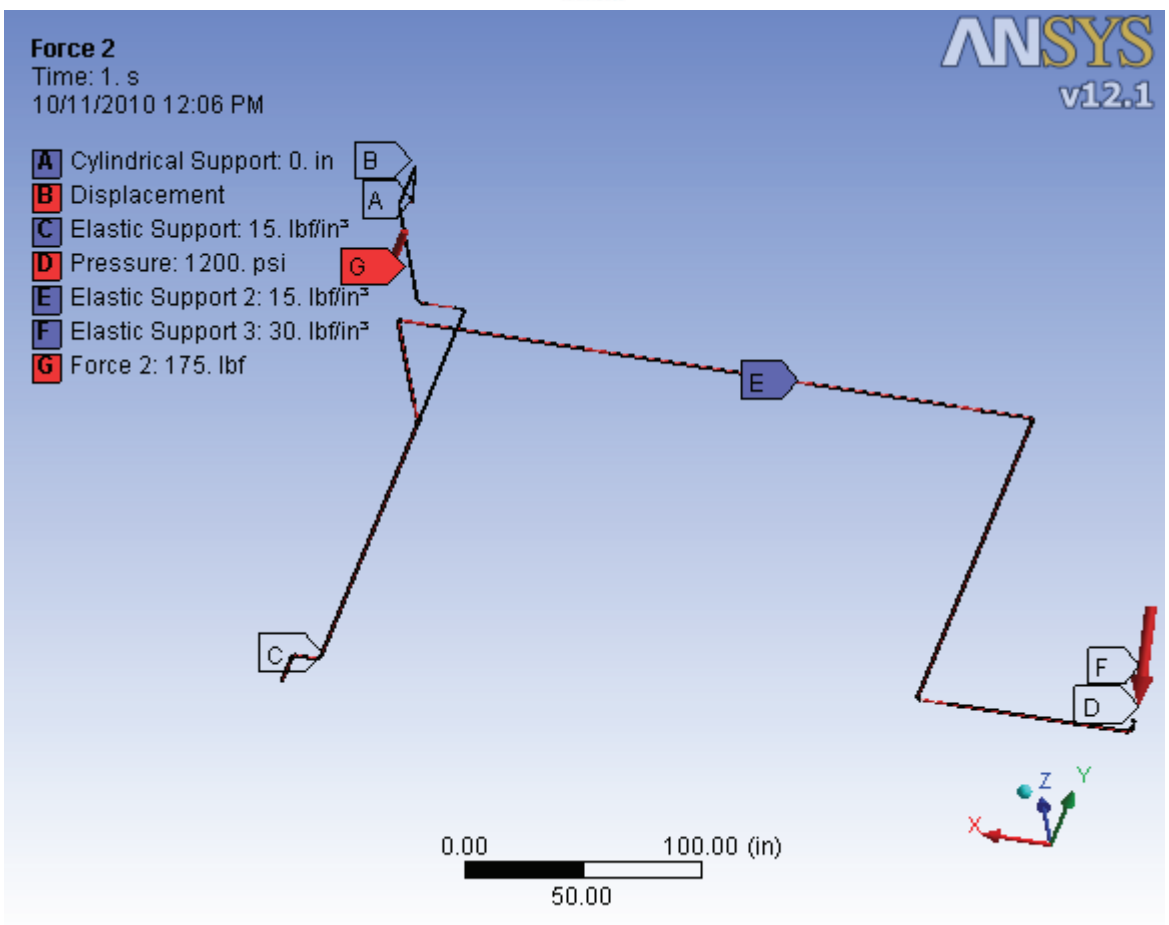

Stress Plot

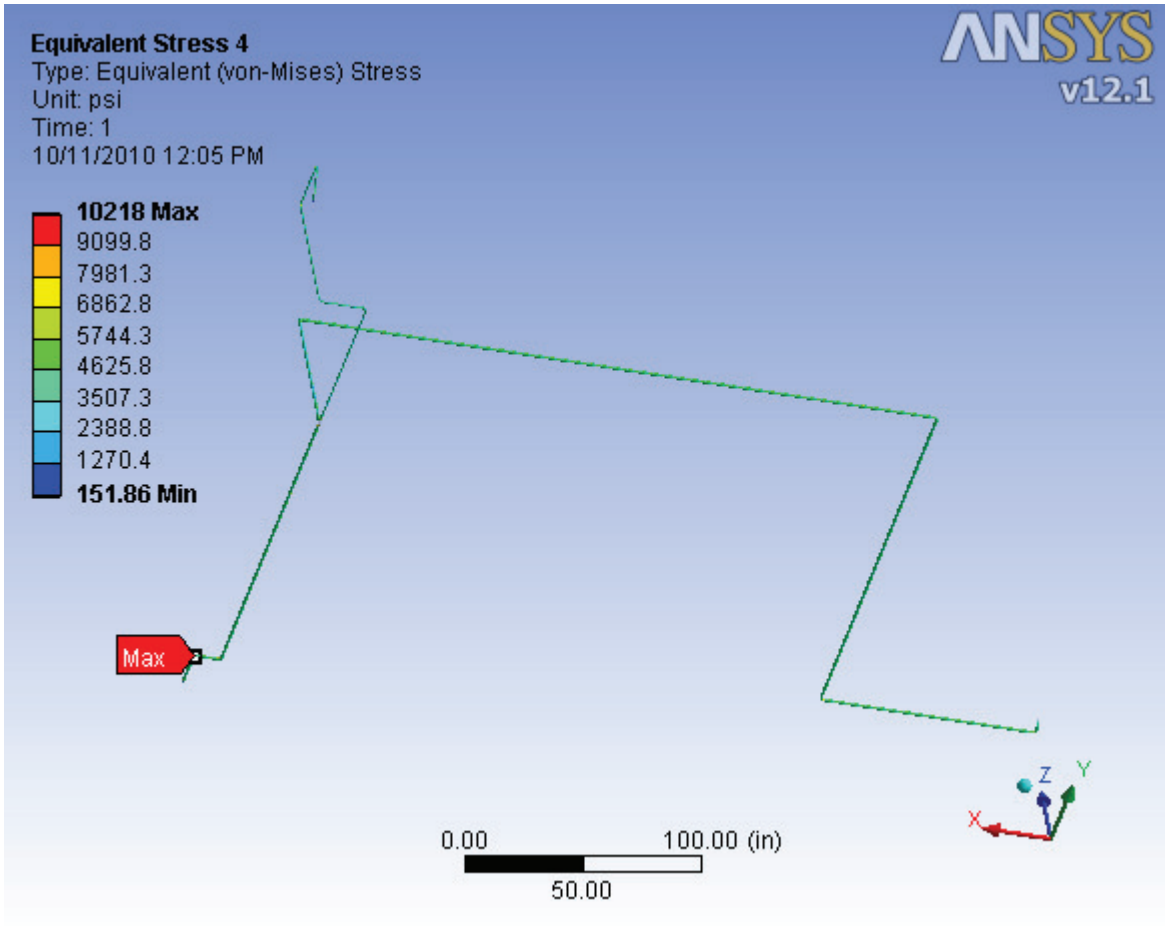

Deformation Plot

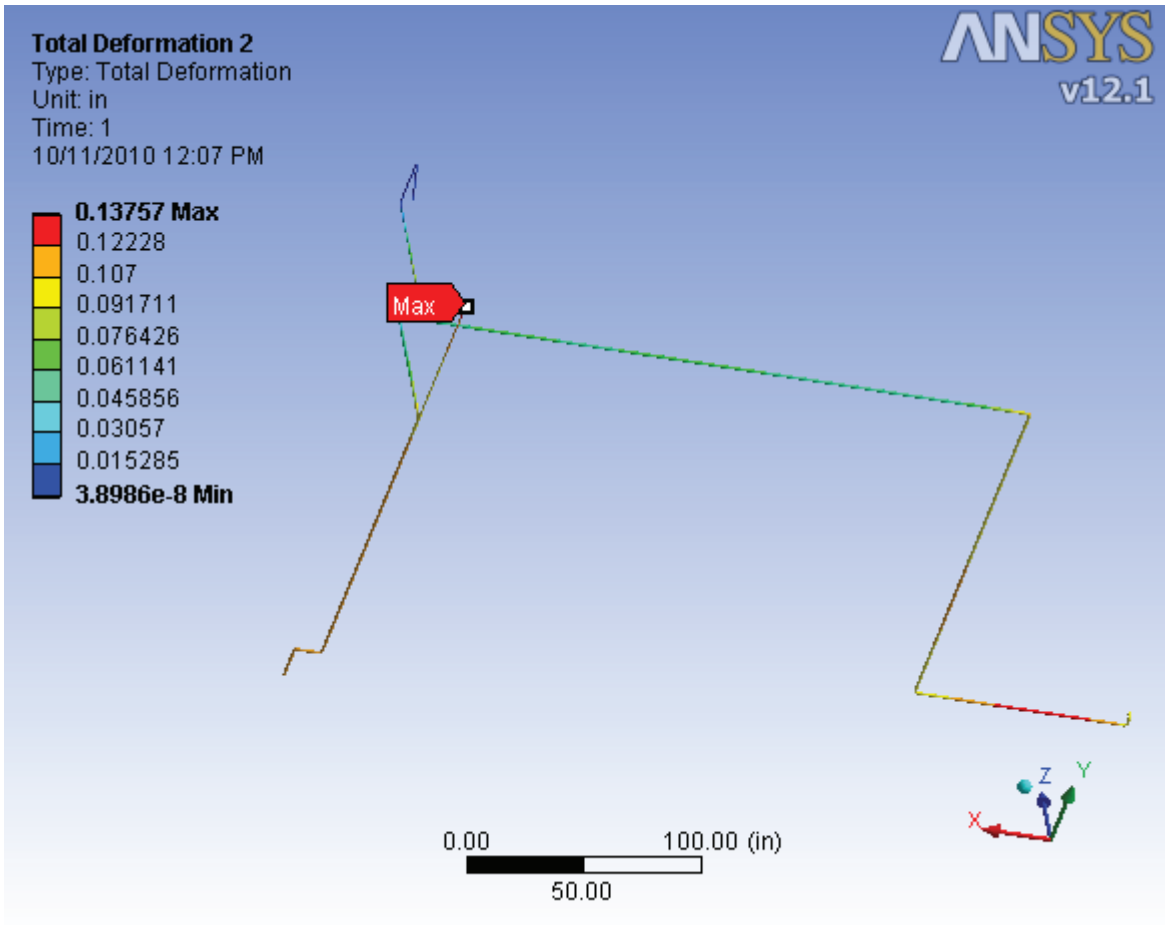

Pipe Section 5

Pipe section 4 is three assemblies joined by a flanges, hart unions and welding. They were joined in an assembly and the model was then analyzed in Ansys with the described boundary conditions and subjectec to numerous loads:

1.) Temperature drop from 71.6F to -110F
2.) Internal Pressure of 1200 psig

Unconstrained Extensions of the pipe were not added to the model to simplify computation as they do not effect analysis results. A small phase separation vessel was analyzed

Pipe and equipment descriptions

Assembly 5 - into cleanroom						
Pipe size	Piece#	Description	Length shown	end 1	end 2	MAWP (psi)
1	1	Union NUT END	2.25/2	(to Assm 3)	piece 2	3000
1	2	Pipe	12.55			3000
1	3	elbow		Butt-Pipe	Butt-Tee	3000
1	4	Tee		Butt-Elbow	Butt-Pipe	3000
1	4.1	1" Valve	4.22			1480
1	4.2	Pipe	1			3000
1	4.3	Flange				1480
1	4.4	Blind Flange				1480
1	5	Pipe	5.015	Butt-Tee	SW-Valve	3000
1	6	Valve	4.22			1480
1	7	Pipe	5.015	SW-Valve	Butt-Tee	3000
1	8	Tee	r=1.5	Butt-Pipe	Butt-Pipe	3000
1	8.1	1" Valve	4.22			1480
1	8.2	Pipe	1			3000
1	8.3	Flange				1480
1	8.4	Blind Flange				1480
1 to 1.5	9	reducer to 1.5	L=2.5	Butt-Tee	Butt-elbow	2000
1.5	10	elbow	r=2.25	Butt-Reducer	Butt-Pipe	2000
1.5	11	Pipe	0.4	Butt-elbow	SW-flange	2000
1.5	12	600# flange	0.875"+.25"			1480

Assembly 9 - Phase Separator Top outlet (P.S.)						
Pipe size	Piece#	Description	Length shown	end 1	end 2	MAWP (psi)
0.75	1	pipe nipple cut	3	threaded to P.S.	butt elbow	2000
0.75	2	pipe elbow	r = 1.5	Butt Pipe	Butt Pipe	3000
.75 to 1	3	reducer	2"	Butt-elbow	Butt Pipe	3000
1	4	Pipe	4	Butt-Reducer	Butt-elbow	3000
1	5	elbow	r = 1.5			3000
1	6	Pipe	4	Butt-elbow	SW strainer	3000
1	6.1	saddle fitting	2" from elbow			3000
1	6.11	sight glass				1450
1	6.2	saddle fitting				3000
1	6.21	sight glass				1450
1	7	Strainer	4.5			1480
1 to .75	8	reducer	2	SW-Strainer	Butt Reducer	3000
.75 to .5	9	reducer	1.5	Butt Reducer		3000
0.5	10	Check Valve	3.75			1480
0.5	11	Pipe	3 - 7/16	SW-CV	Butt elbow	3000
0.5	12	elbow				3000
0.5	13	Pipe	1	Butt-elbow	SW CV	3000
0.5	14	Control Valve				2000
0.5	15	Pipe	3	SW CV	SW-(Assm 7)	3000

Assembly 7 - return line in cleanroom

Pipe size	Piece#	Description	Length shown	end 1	end 2	MAWP (psi)
1	1	Union NE	2.25/2	Piece 19	(to Assm 8)	3000
1	2	Pipe	8.82	SW union	Butt - elbow	3000
1	3	elbow	r = 1.5	Butt-Pipe	Butt-Pipe	3000
1	4	Pipe	4.81	Butt-elbow	Butt-elbow	3000
1	5	elbow	r = 1.5	Butt-Pipe	Butt-Pipe	3000
1	6	Pipe	3.6	Butt-elbow	Butt-elbow	3000
1	7	elbow	r = 1.5	Butt-Pipe	Butt-Reducer	3000
1 to 1.5	8	Reducer	2.5 - .5	Butt-elbow	SW-CV	2000
1.5	9	Check-Valve	5	reducer	reducer	1480
1.5 to 1	10	Reducer	2.5 - .5	SW-CV	Butt-Pipe	2000
1	11	Pipe	17.05	Butt-Reducer	SW-Valve	3000
.5"	11.1	saddle fitting		pipe 11	(to assm 9)	3000
1	12	1" Valve	4.22	pipe 11	pipe13	3000
1	13	Pipe	1	SW-Valve	Butt-elbow	1480
1	14	Elbow	r = 1.5 "	Butt-Pipe	Butt-Pipe	3000
1 to 1.5	15	reducer	2.5	Butt-elbow	Butt-Pipe	2000
1.5	16	Pipe	9.375	Butt - reducer	SW-Valve	2000
1.5"	16.1	saddle fitting	2" from reducer			3000
1.5"	16.11	sight glass				1450
1.5"	16.2	saddle fitting	2" from reducer			3000
1.5"	16.21	sight glass				1450
.5"	16.3	saddle fitting	4.75" from reducer			3000
0.5	16.31	nipple				3000
0.5	16.32	Valve				1480
.5 to .25	16.33	bushing				3000
0.25	16.34	Pressure Trans				3000
.5"	16.4	saddle fitting	7.25" from reducer		relief valve	3000
0.5	16.41	relief valve				10000 psi burst
1.5	17	Valve	5	pipe 16	Pipe 18	1480
1.5	18	Pipe	1.5	SW-Valve	Butt Tee	2000
.25"	18.1	saddle fitting				3000
1.5	19	Tee		Butt pipe 18	Butt Tee 20	3000
1.5	19.1	Coupling		Tee 20	Thermowell	3000
1.5	19.11	Thermowell				20000
1.5	20	Tee		Butt Tee 19	Valve (up)	3000
1.5	20.1	Valve		Tee 19	Pipe 19.2	1480
1.5	20.11	Pipe	1	SW valve	SW flange	3000
1.5	20.12	flange		end of pipe 19.2		1480
1.5	20.13	blind flange				1480
1.5	21	45 degree elbow		Butt Tee 20		2000
1.5	22	Flex Pipe		Butt elbow	Butt Pipe	1200 (4842 Burst)
1.5	23	Pipe	2	Butt Flex	SW Flange	2000
0.375	24	saddle fitting				3000
0.375	24.1	Nipple				3000
0.375	24.11	Valve				1480
0.375	24.12	plug				3000
1.5	25	Flange				1480

Boundary Conditions Temperature drop to -110F

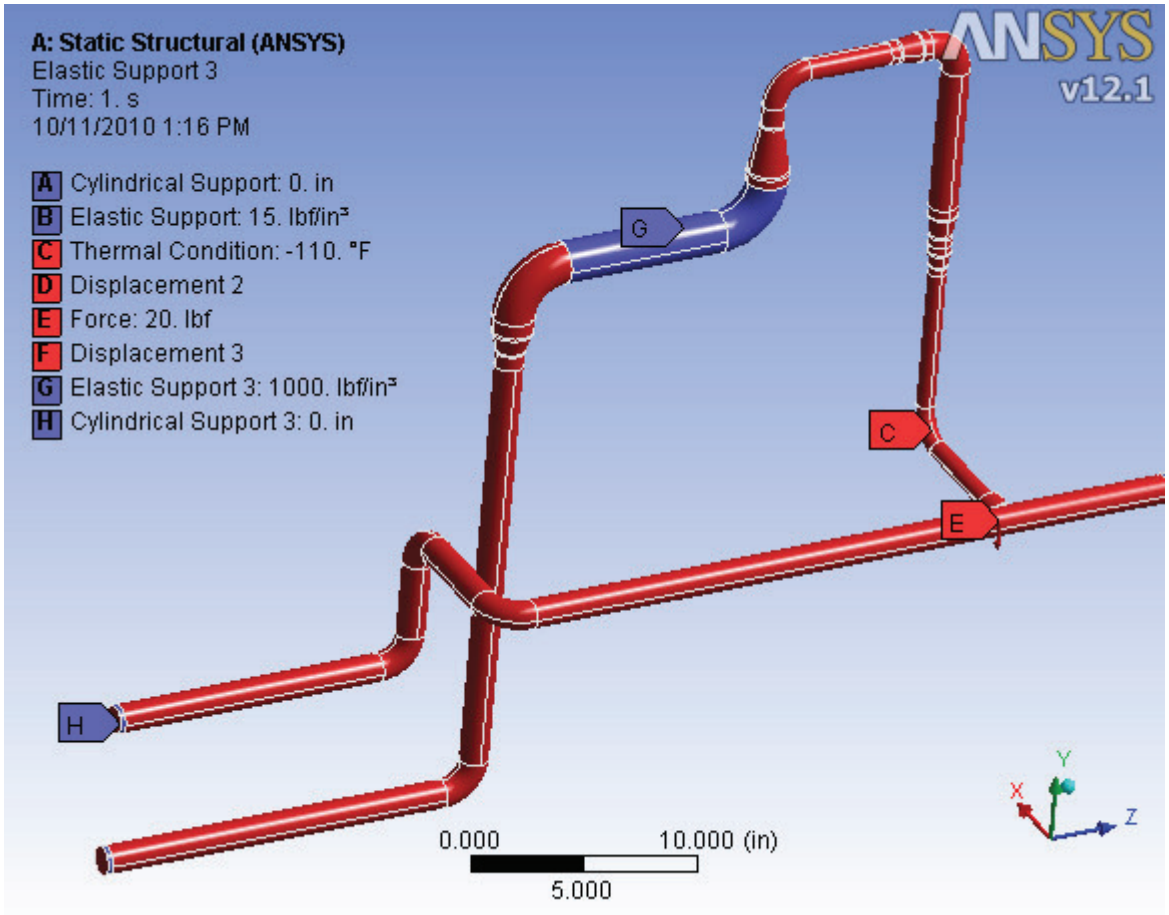

Stress Plot

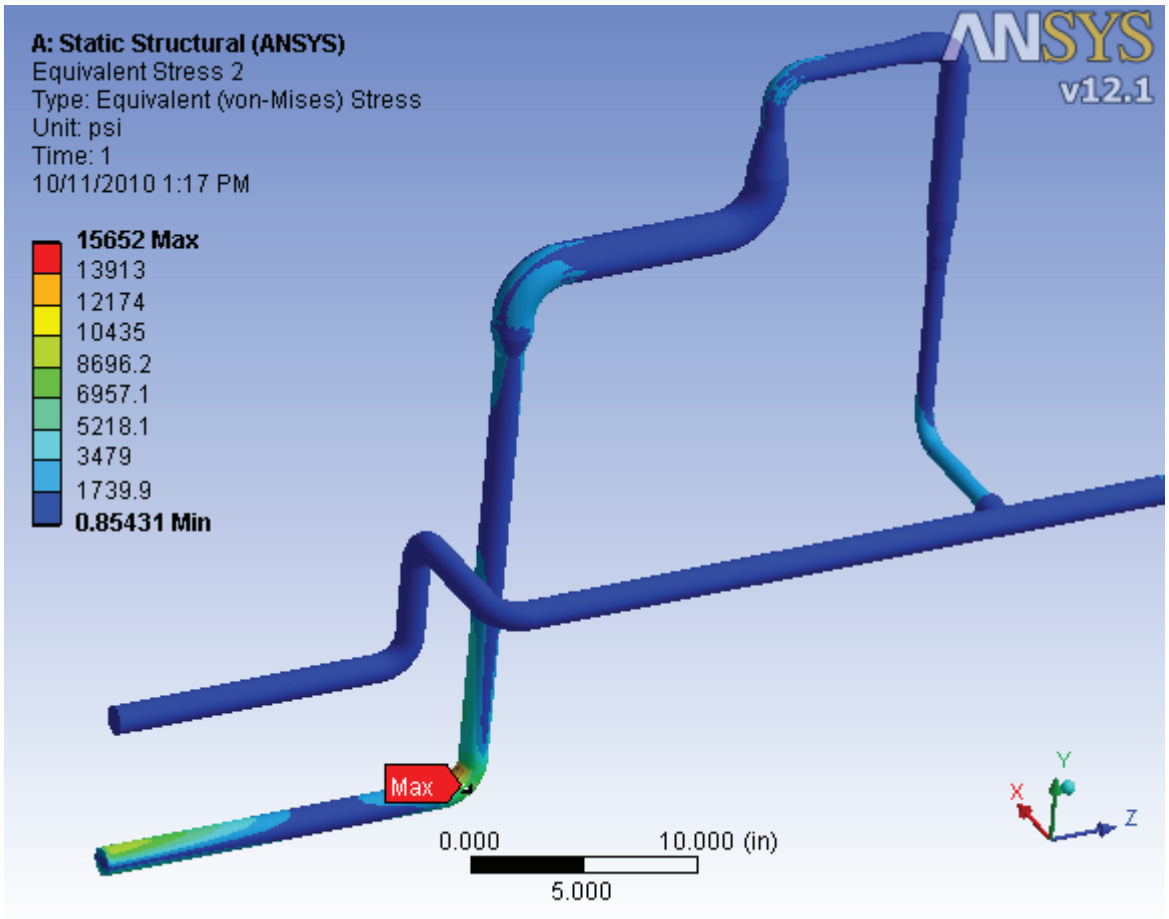

Deformation Plot

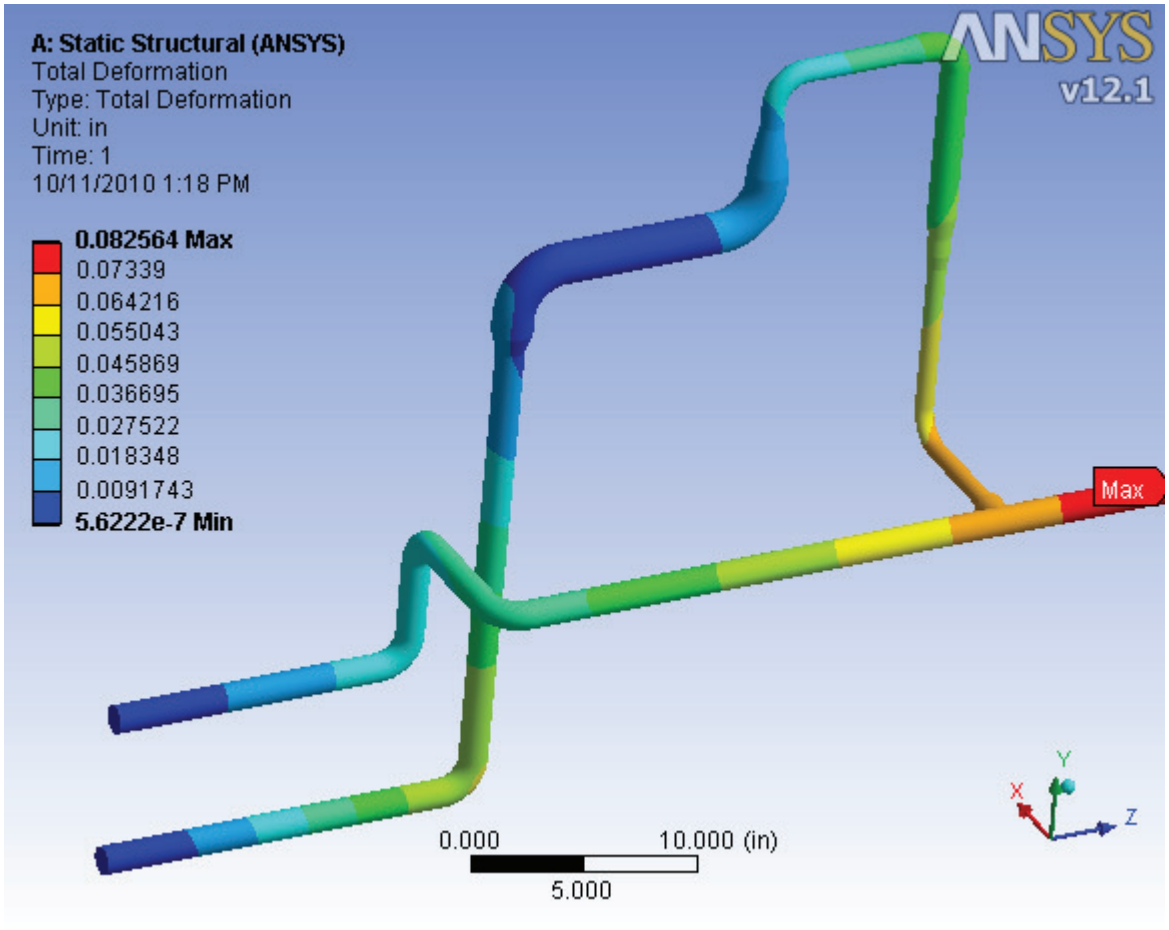

Boundary Conditions Internal Pressure

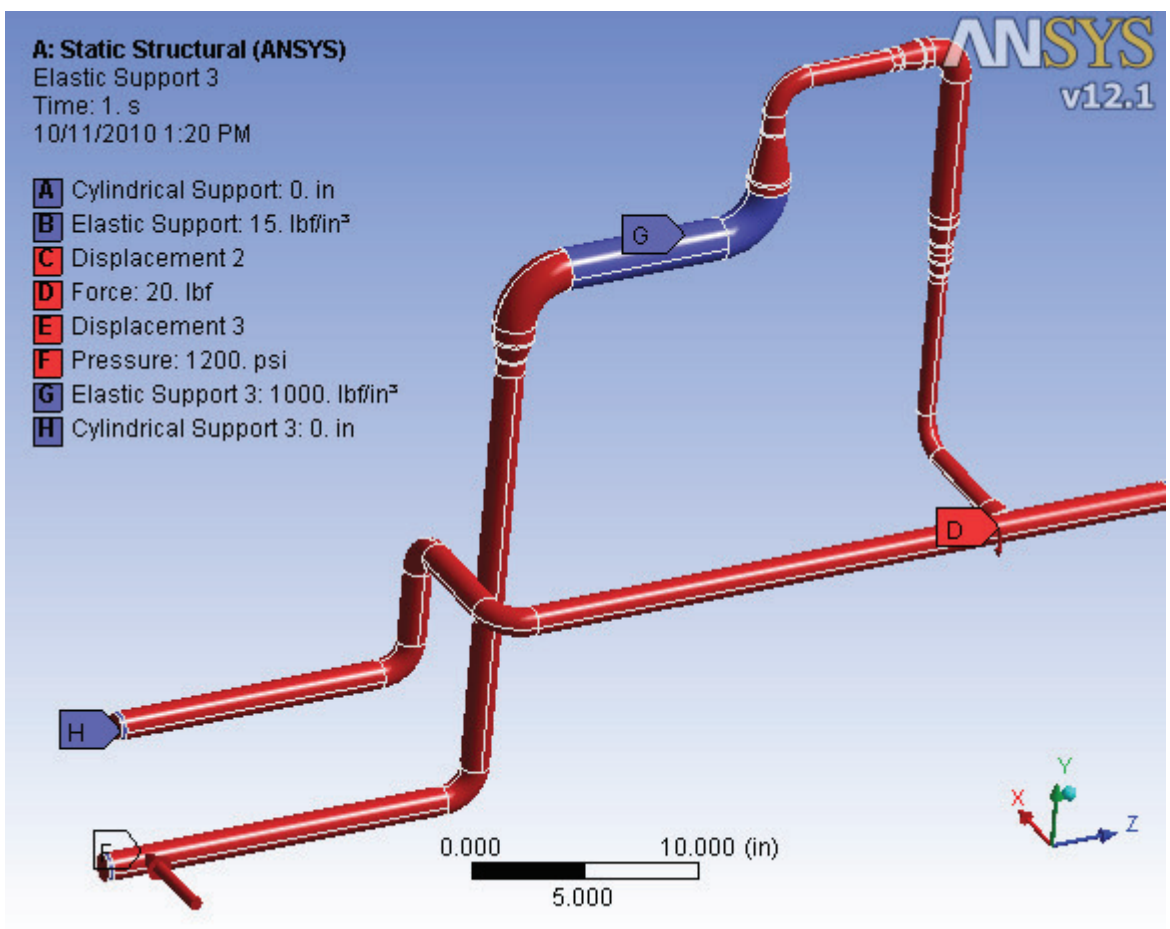

Stress Plot

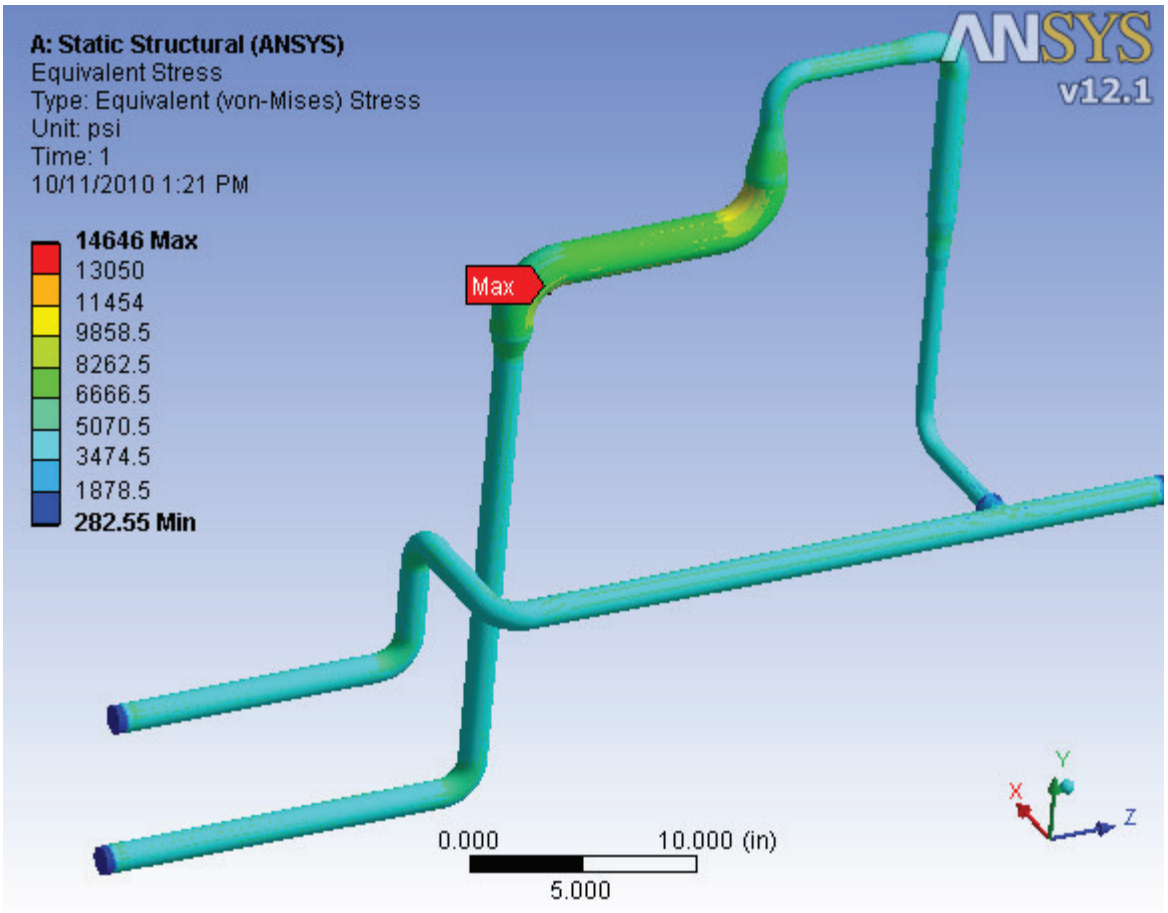

Deformation plot

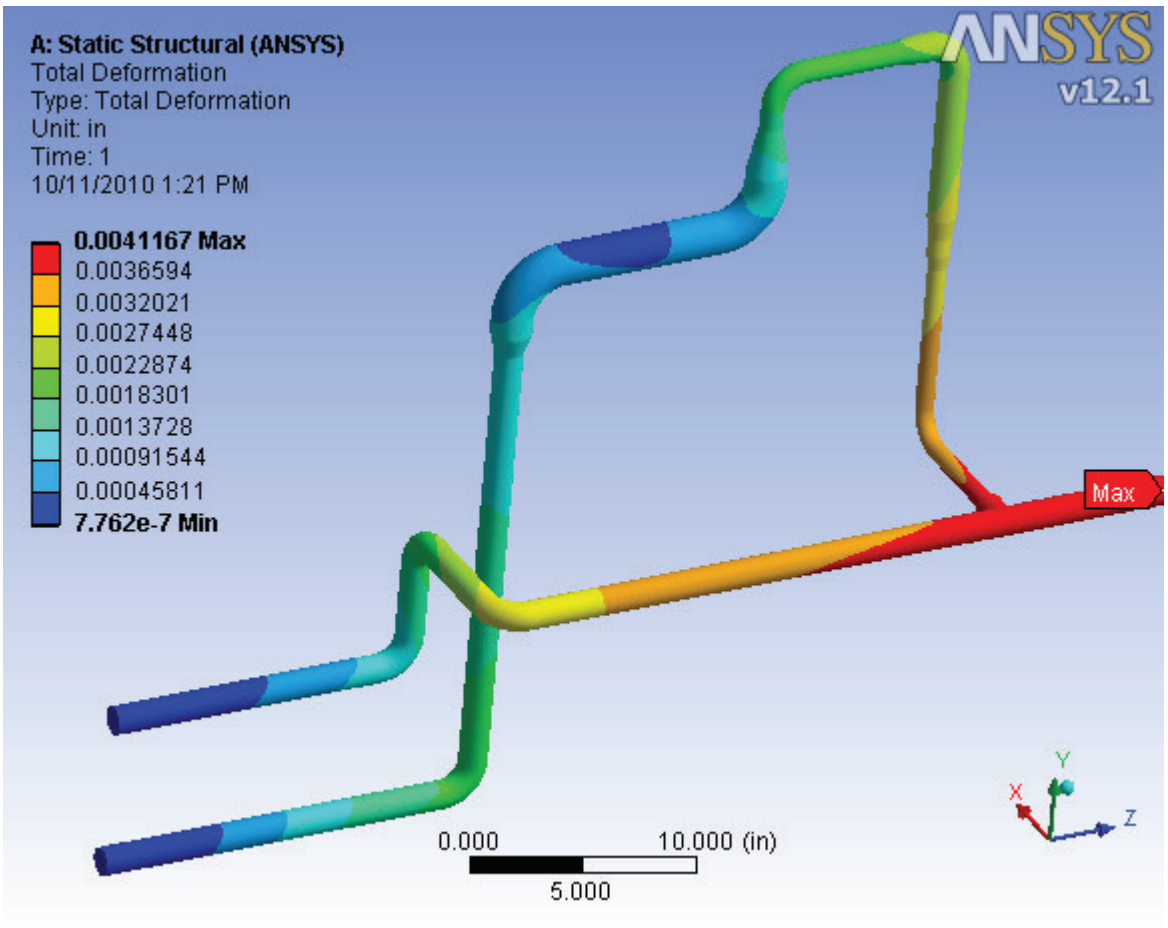

Pipe Sections 3, 4, and 5

Pipe sections 3 four and 5 were combines as their contact points are not perfectly fixed and their displacements effect each others stress levels. The three sections were joined in an assembly and the model was then analyzed in Ansys with the described boundary conditions (same as 3,4,and 5) and subjected to numerous loads:

1.) Temperature drop from 71.6F to -110F
2.) Internal Pressure of 1200 psig

Boundary Conditions Temperature drop to -110F

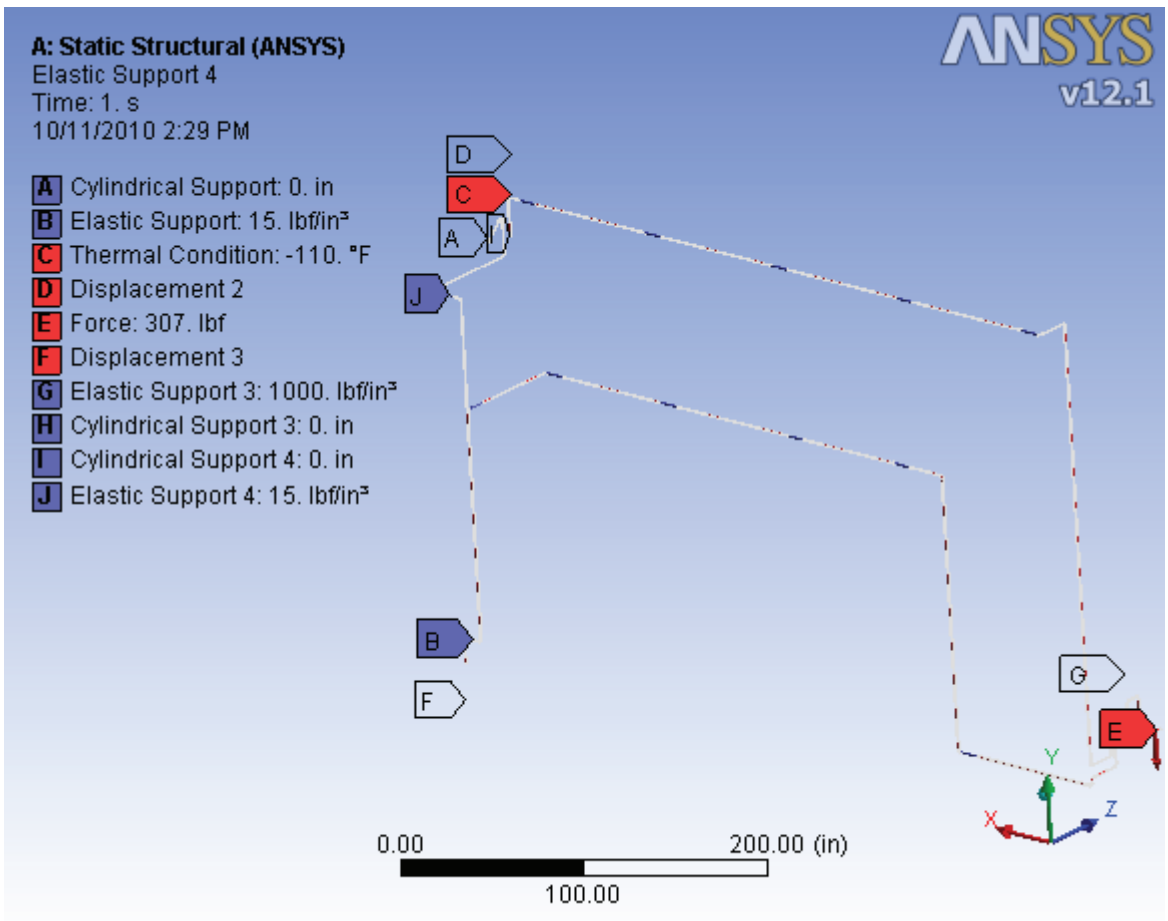

Stress Plot

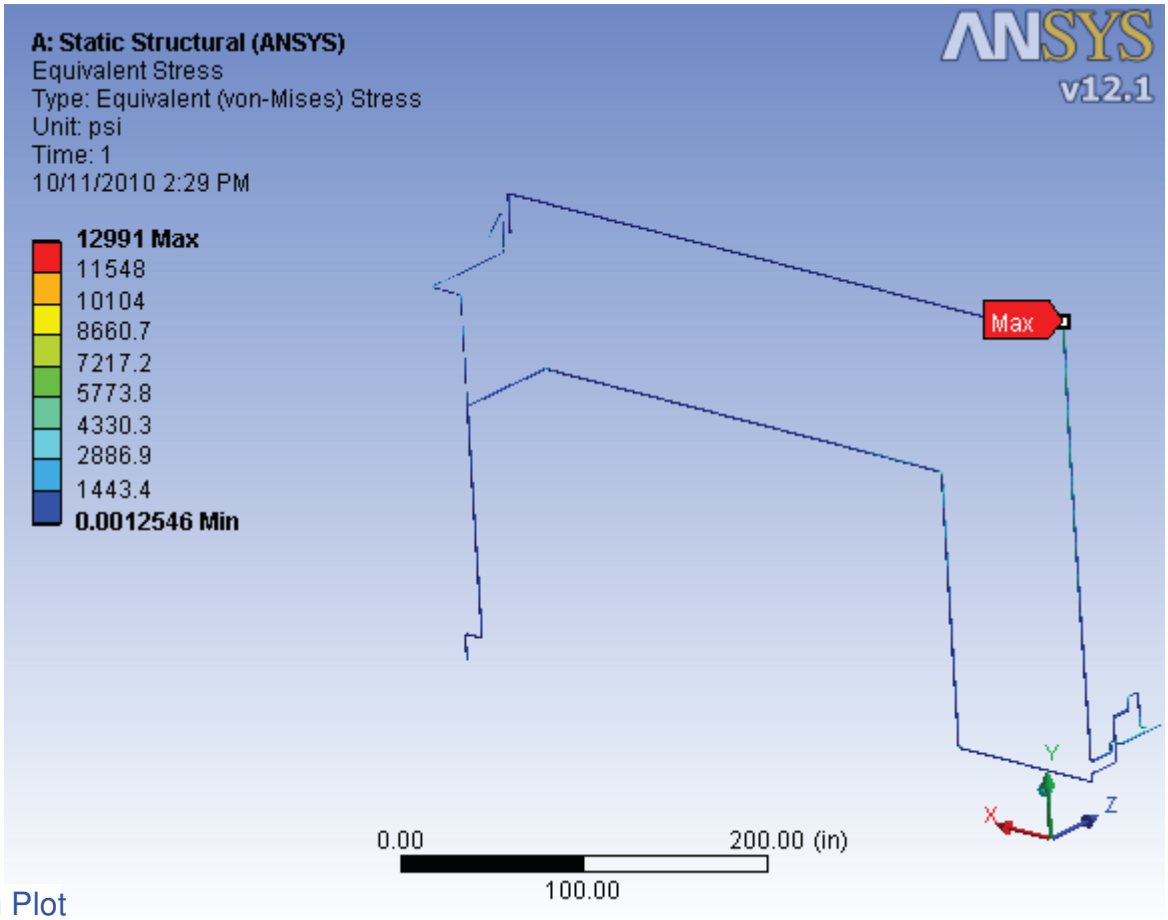

Deformation Plot

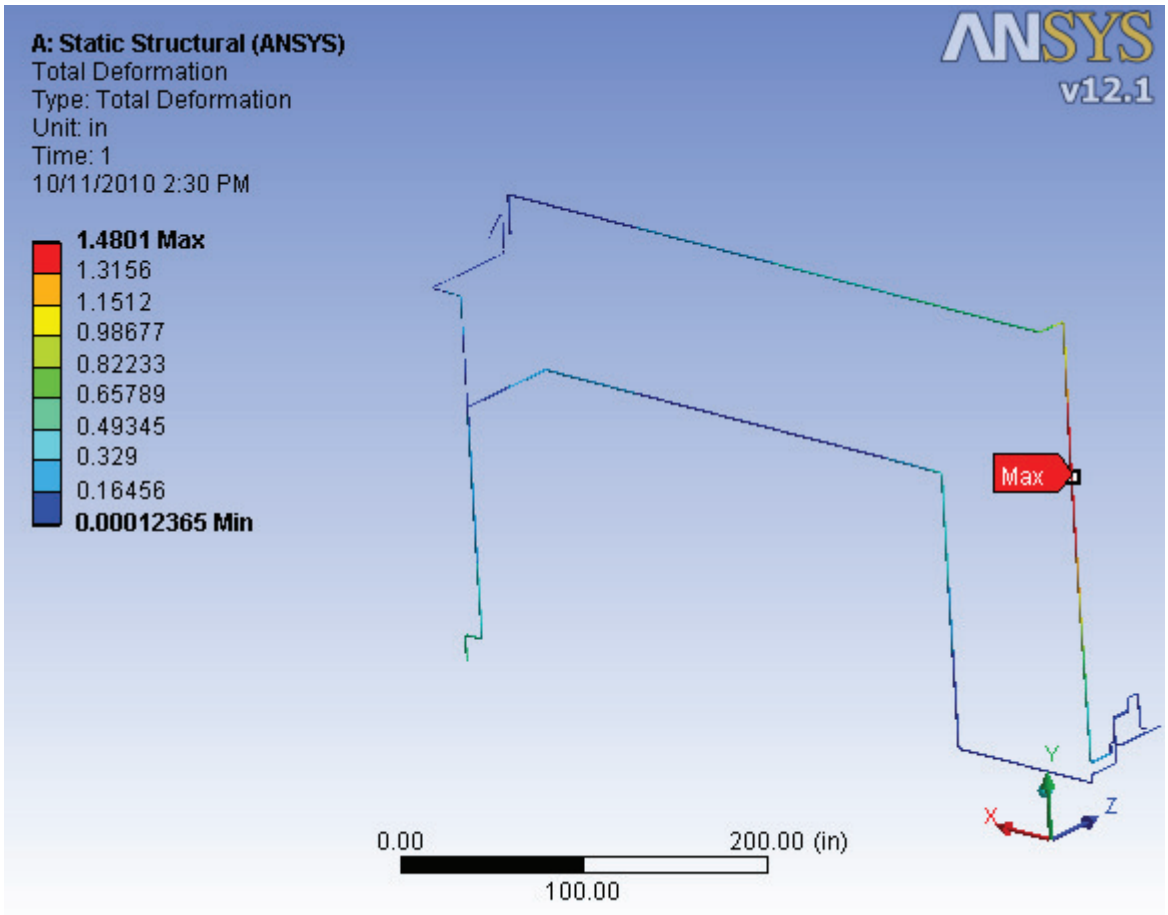

Boundary Conditions Internal Pressure

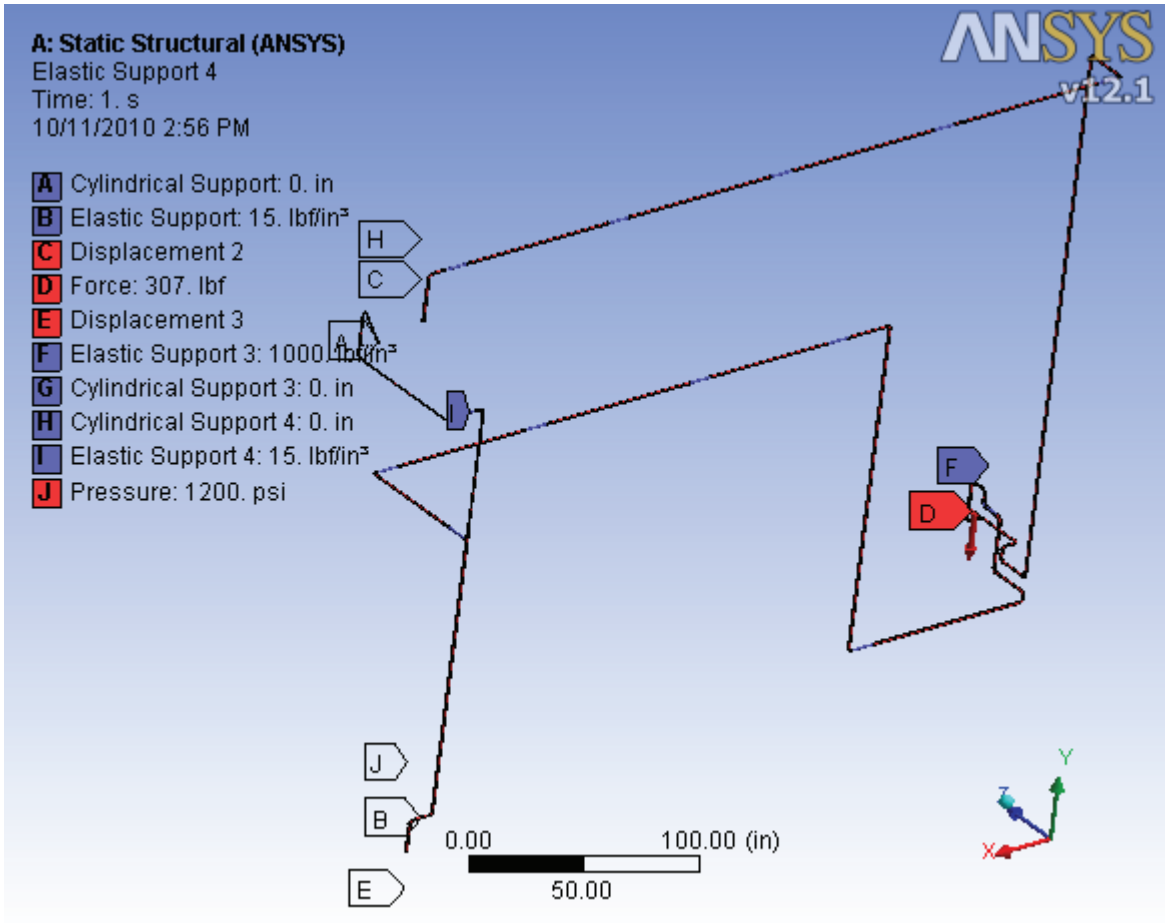

Stress Plot

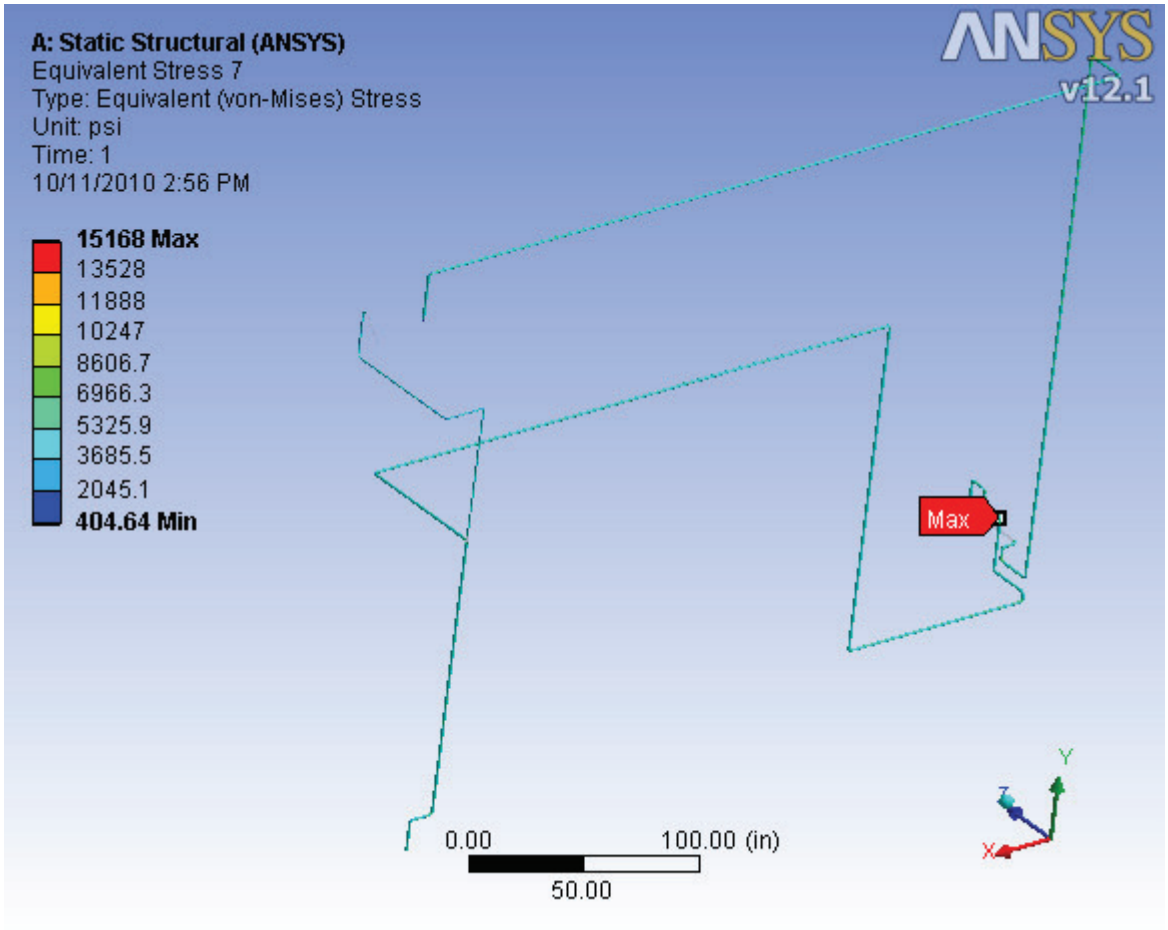

Deformation plot

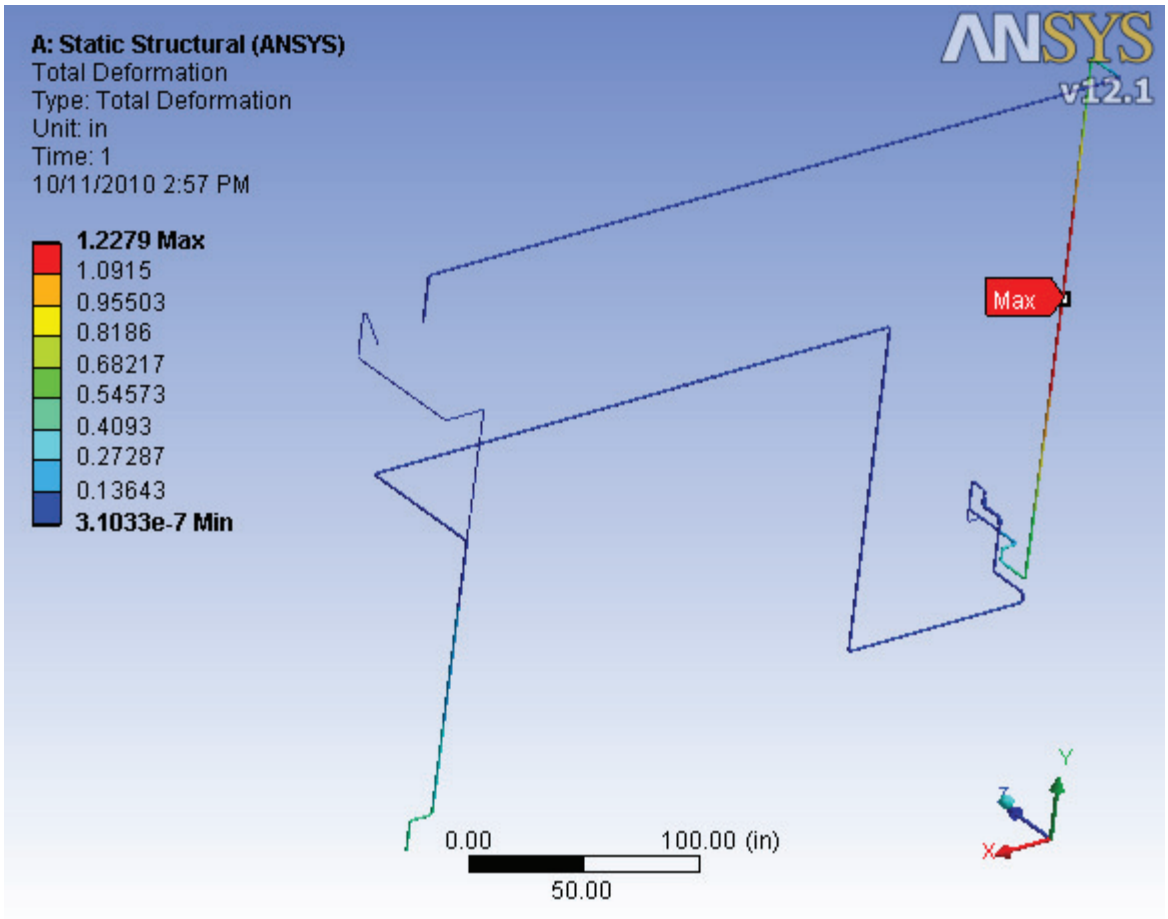

Result Summary For sections # 3,4 and 5

The stress levels fall below the allowed 16.7 ksi in ASME 31.3 process piping code. Fittings are designed thicker than the pipe itself, and are rated for the temperature and pressure and allowed by 31.3. Stress levels the fittings should be somewhat lower than shown in the ansys model since they are modeled the same thickness as the pipe itself for a conservative approach. The pipe Tee was left out of the stress plot in the pressure analysis since it is rated to the temperature and pressure for ASME31.3. Deformation levels are reasonable and could easily be allowed by the pipe insulation and hangers without constraint.

Pipe Section 6

Pipe section 6 is one assembly, which comes out of the bottom of the phase separator and is unconstrained at the end. An FEA model was not performed as one end in unconstrained and is not sensitive to expansion or contraction due to temperature or pressure changes.

Pipe and equipment descriptions:

Assembly 10 - Phase Separator Bottom outlet (P.S.)						
Pipe size	Piece#	Description	Length shown	end 1	end 2	MAWP (psi)
1.5	1	flange	1.125			1480
1.5	2	Pipe	0.65	SW flange	SW valve	2000
1.5	3	Valve	5			1480
1.5	4	Pipe	0.25	SW Valve	Butt Elbow	2000
1.5	5	Elbow	r = 2.25	Butt Pipe	Butt Reducer	2000
1.5 to 1	6	reducer	2.5	Butt-elbow	Butt Pipe	2000
1	7	Pipe	2	Butt-Reducer	SW-flange	3000
1	8	Orifice Flanges	2.5			1480
1	9	Pipe	3.75	SW Flange	SW Valve	3000
1"	9.1	saddle fitting	SW-F end	Pipe 9	relief valve	3000
1	9.11	relief valve				10000 psi burst
1	10	Valve	4.22			1480
1	11	Pipe	8.5	SW valve	Butt-Tee	3000
1	11.1	saddle fitting				3000
1	11.11	sight glass				1450
1	11.2	saddle fitting				3000
1	11.21	sight glass				1450
1	11.4	saddle fitting			relief valve	3000
1	11.41	relief valve				10000 psi burst
0.25	11.3	saddle fitting			DPT	3000
1	12	Tee		Butt-Pipe 11	Butt-Tee	3000
1	12.1	Coupling				3000
1	12.11	Thermowell				20000
1	13	Tee		Butt Tee 12	Valve	3000
1	13.1	Valve				1480
1	13.2	Pipe	1	SW-Valve	SW flange	3000
1	13.3	Flange				1480
1	13.4	Blind Flange				3000
1	14	45 degree elbow				3000
1.5	15	flex pipe				1200 (4842 Burst)
1.5	16	strainer				1480
1.5	17	Pipe	2	SW-strainer	SW flange	2000
0.375	18	Saddle Fitting				3000
0.375	18.1	Nipple				3000
0.375	18.2	Valve				1480
0.375	18.3	Plug				3000
1.5	19	flange				1480

Pressure Testing:
Block Off Plates For Storage Vessel

Since The Pressure Vessels have already been Hydrostatically Tested by the Manufacturer, the flanges will be blocked off with 1/4 in thick plates. This is done to avoid pressurizing the large volume of the storage tank. Plated were analyzed and capable of withstanding the test pressure of 1320 psi, with stress under code stress. Only the area which would be clamped in the face of the ring gasket is modeled, as the square extensions will not effect the analysis result. Quarter symmetry was used in the analysis as well to speed computation time. A drawing of the block of plates is below.

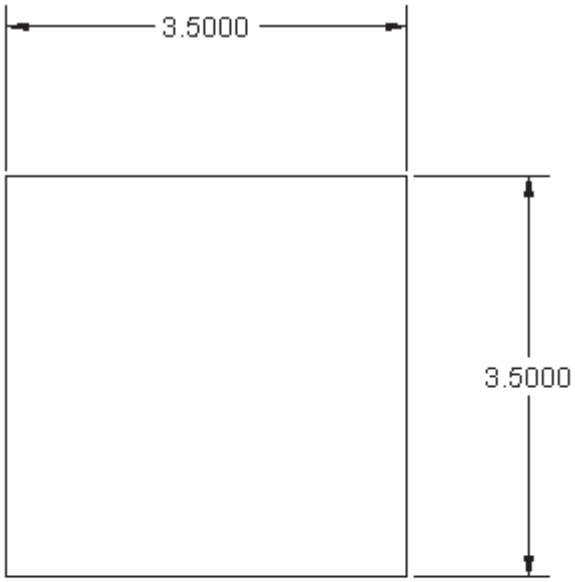

ASTM A108 Steel
Yield Strength 45000 psi

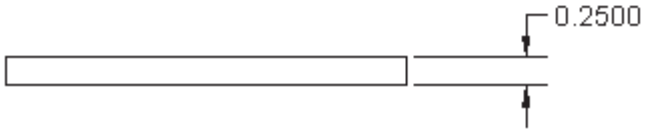

Boundary Conditions:
Pressure in Center. Elastic support equal to flange elasticity places on bottom outside ring

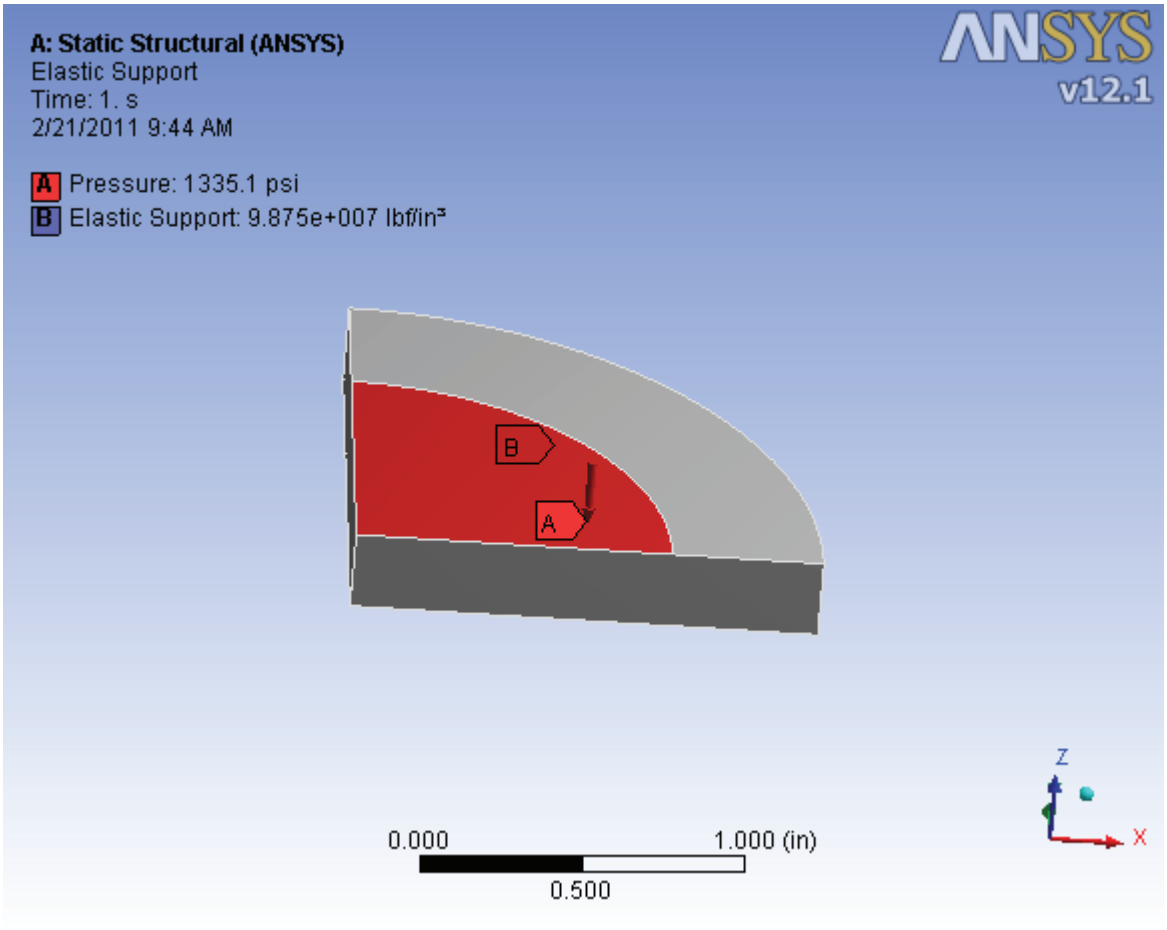

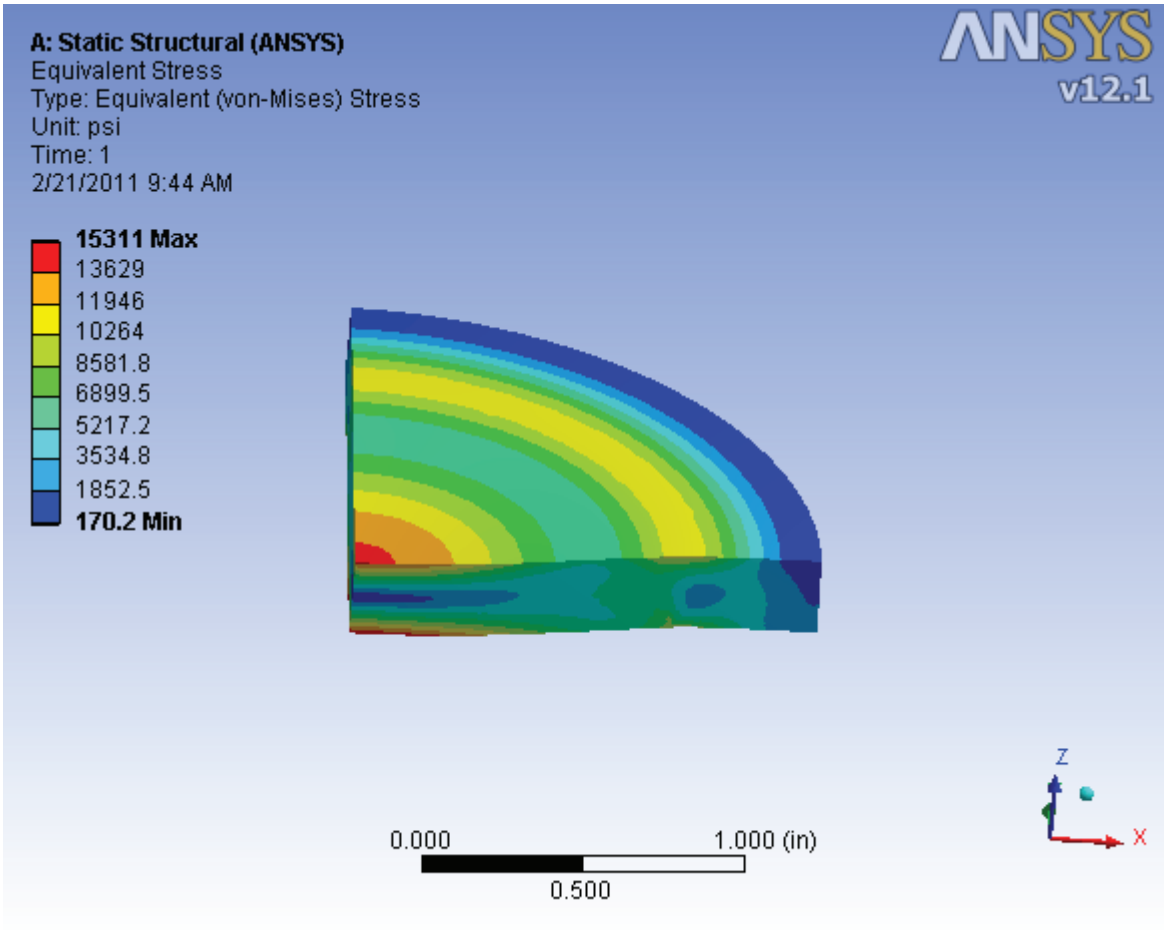

4. Pressure Containment / Relief System

Relief Valves:

Each of the six applicable piping areas are equipped with a trapped volume relief valve. These relief valves are set to open at 1200 psig. All relief valves are Anderson Greenwood Trim KT with a size '4' orifice area equal to 0.049 in^2. For specific valve numbers and locations see the Piping and Instrument Diagram.

Calculations were performed which show the capacity of these valves more than meets the criteria of API 521 and ASME standards. Inlet and outlet pressure drop is below the respective allowable 3% and 10% set by API standard 521. Details of these calculations are shown in the following pages.

CMS Bayonet Heater Tank Relief Valve Piping and Orifice Sizing

These MATHCAD calculations are for the Piping system relief valve, inlet, and outlet piping sizes.

Under ASME VIII-1, overpressure protection is in UG-125 to UG-136.

ASME requires that potential overpressure scenarios are identified and a method of overpressure protection be used to mitigate. Other than for fire, the larger of 10% or 3 psi overpressure is allow. If fire exposure is possible then 21% overpressure is allowed for the fire scenario. (UG-125)

The International ISO 23251/API 521 standard is used for evaluating the overpressure scenarios and estabilishing a basis for design. This standard is used in conjunction with API 520 for sizing. The API 520 standard is used as a supplement to the simple capacity conversion information in ASME Sect. VIII-Div 1.

For gas flow, MATHCAD's multiple equation solving function is used to perform actual compressible flow calculations.

Per ASME, "The calculated capacity of any pressure relief system may be determined by analyzing the total system resistance to flow. This analysis shall take into consideration the flow resistance of the pipine and piping components including the exit nozzle on the vessels, elbows, tees, reducers, and valves. The calculation shall be made using accepted engineering practices for determining fluid flow through piping systems. This caculated relieving capacity shall be mutiplied by a factor of 0.90 or less to allow for uncertainties inherent in this method.", UG-127(d)(1)(2), Open Flow Paths or Vents.

For evaluating the fire case, credit is taken for the fire resistant insulation and accounted for in the environment factor. The RV inlet and outlet pipe are checked with the flow that will pass through the selected orifice.

The vendor provided relief valve capacity for air will be rerated for Carbon Dioxide and checked against the estimated relief valve capacity.

Ref:
ASME Boiler and Pressure Vessel Code, ASME Section VIII-DIV 1, 2007
API Standard 520, Part I and II, 2008
ANSI/API Standard 521, 2007 with 2008 addendum

Scenario Check List (API 521)

1. **Closed outlets** - Closed outlets are possible but are not a source of overpressure,. The available supply pressure is less than vessel design (MAWP) pressure.

2. **Coolant failure** - Not applicable.
3. **Top reflux failure** - Not applicable.
4. **Side reflux failure** - Not applicable
5. **Lean Oil failure to absorber** - Not applicable.
6. **Accumulation of noncondensables** - Not applicable,
7. **Entrance of highly volatile material** - Not applicable.
8. **Overfilling** - Overfilling is possible but is not a source of overpressure The available supply pressure less than vessel design (MAWP) pressure.
9. **Control Failure** - Heater could remain on at maximum heat input of 6000W.
10. **Abnormal heat or vapor input** - worst case would be item 9
11. **Split exchanger tube** - NA
12. **Internal explosion** - NA
13. **Chemical reaction** - NA
14. **Hydraulic expansion** - Possible and analyzed in item 8 under supercritical conditions
15. **Exterior fire** - Possible that small quantity of flammables (box/papers) are near the piping.
16. **Power failure** (steam, electric, air, other) - system stable at ambient temperatures.

Item 9, and 15 above are identified as possible sources of overpressure.

Item 9 requires a relief rate of 330 lb/hr.
Item 15 requires an order of magnitude less relieving capacity, and is not the scenario of interest.

Vessels Anderson Greenwood relief valve is capable of venting over 7000 lb/hr of supercritical CO_2 and are more than adequate for safety purposes. Calculations follow:

Evaluation of Overpressure Scenario 9 - Heater Remains On at 6000W heat load

According to Compressed gas assocoation, the critical temperature for which calculations should be made for relieving a supercritical fluid are when: $\frac{\sqrt{v}}{v\cdot\left(\frac{\delta h}{\delta v_p}\right)}$ is at a maximum. CGA states at 200 psia the maximum value for hydrogen occurs at 62.7R. A Calculation method will be tested against hydrogen's given value to test for accuracy of the method.

$$dh_{dv}(Temp) := -0.514512683Temp^3 + 110.595964Temp^2 - 7937.122633Temp + 193723.0553$$

$$rootV(Temp) := -0.0002Temp^2 + 0.0345Temp - 1.0974$$

$$value(Temp) := \frac{1}{\left[\left(dh_{dv}(Temp)\right)\cdot(rootV(Temp))\right]}$$

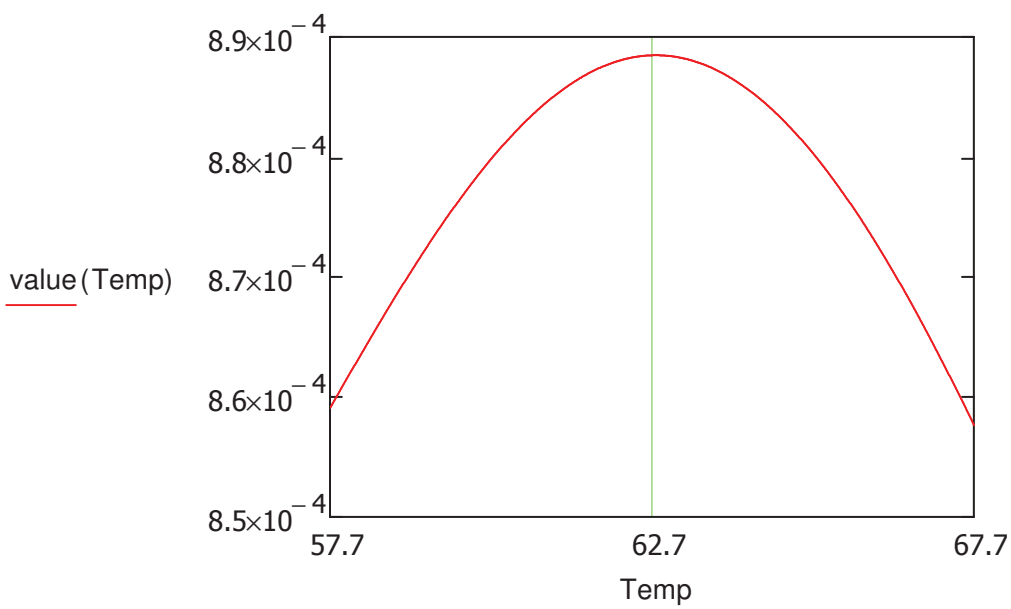

Method Works and is consistant with hydrogen gas value from Compressed gas association. The same method will be used to find the relief valve calculation Temperature of Carbon Dioxide at 1320psi

$$dh_{dv}(Temp) := -1.846799534\cdot Temp^3 + 695.2825211Temp^2 - 87493.47076Temp + 3721622.95$$

$$rootV(Temp) := 5.39422\cdot 10^{-7}Temp^3 - 0.000207814Temp^2 + 0.027073145Temp - 1.131746719$$

$$value(Temp) := \frac{1}{\left[\left(dh_{dv}(Temp)\right)\cdot(rootV(Temp))\right]}$$

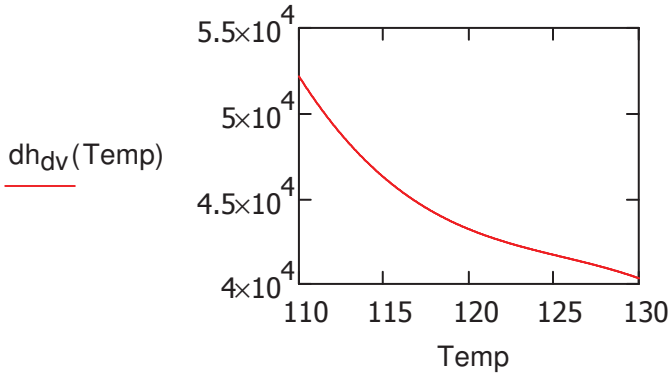

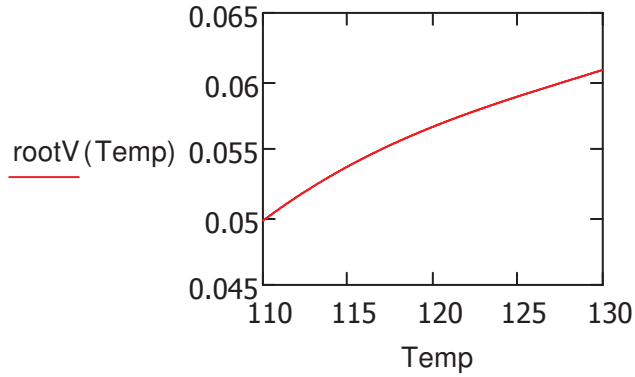

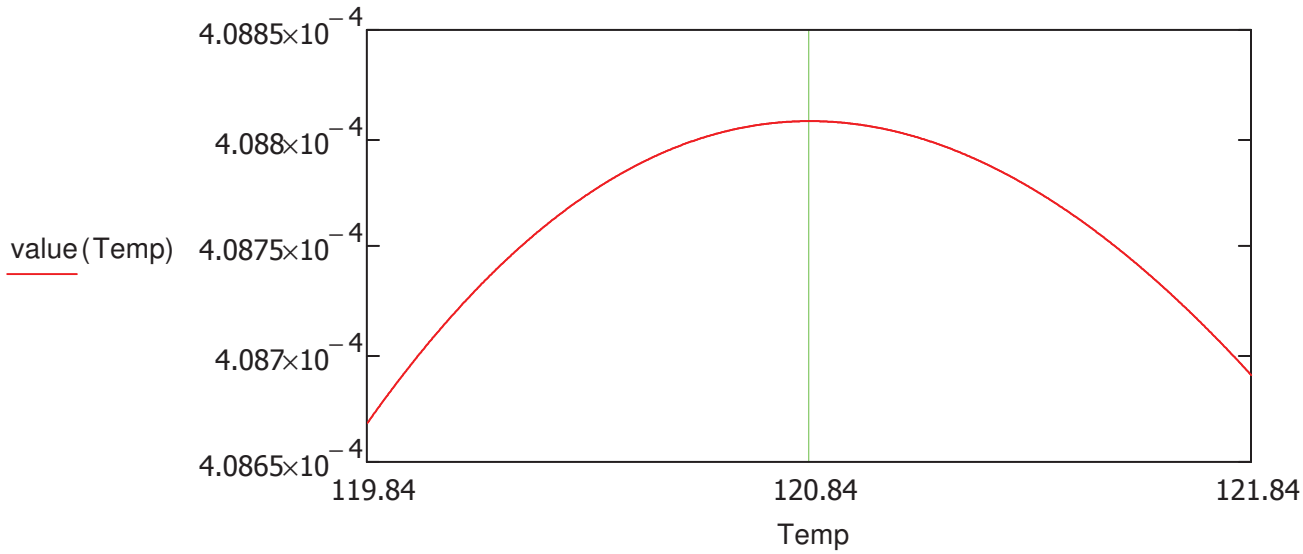

Temperature for Supercritical fluid relief calculations will be made using this temperature of 120.84 F.

This is seen as feasible when one looks at the dV/dh graph below as this derivitive rises rapidly after it reaches a supercritical state then levels off quickly.

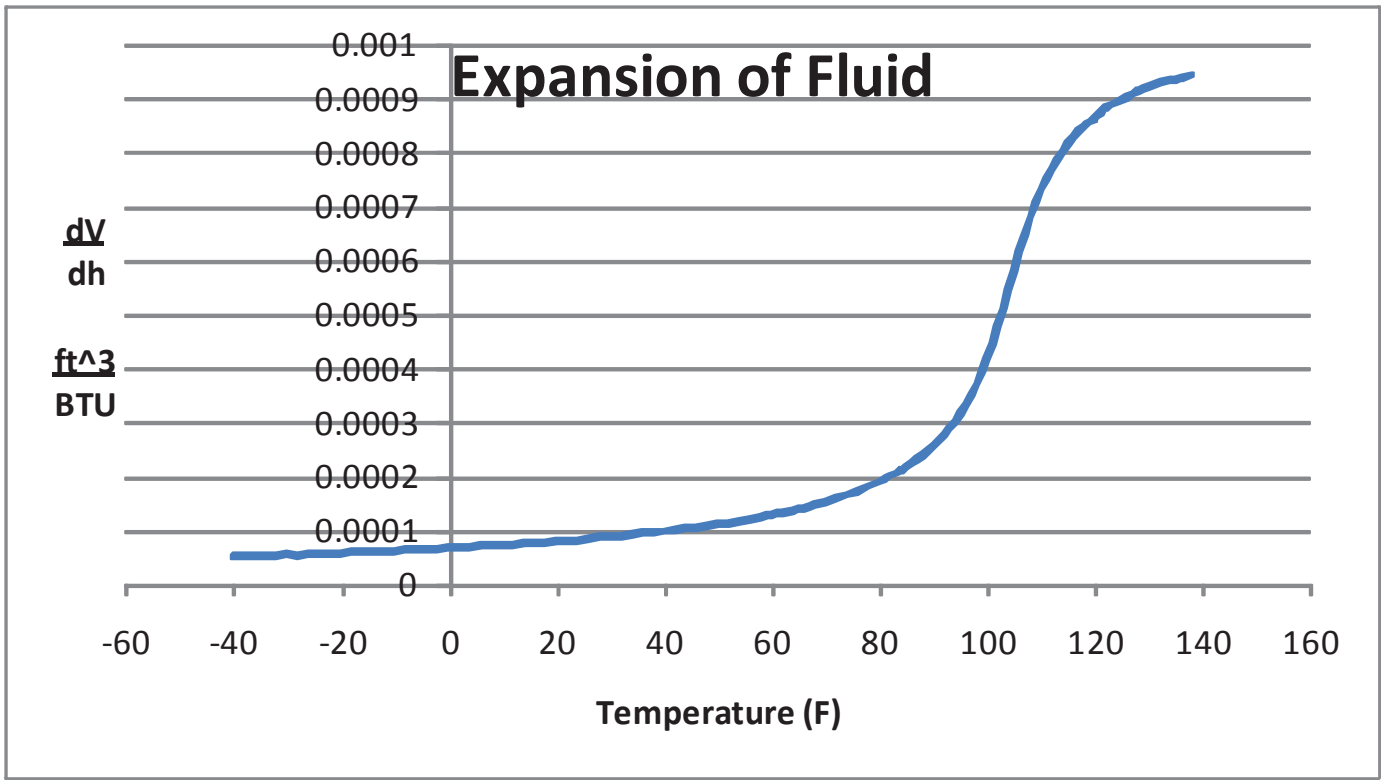

Relief Rate Calculations

Table generated by RefProp

Temperature (°F)	Pressure (psig)	Density (kg/m³)	Volume (m³/kg)	Enthalpy (kJ/kg)	Entropy (kJ/kg-°R)	Heat of Vapor. (kJ/kg)	Viscosity (μPa-s)
108.84	1320.0	424.45	0.0023560	362.93	0.84417	Undefined	30.562
120.84	1320.0	307.50	0.0032520	405.78	0.91887	Undefined	24.165
140.84	1320.0	243.57	0.0041056	440.59	0.97792	Undefined	21.889

$$\frac{dV}{dH} \quad \text{is} \quad dV_{dh} := \frac{(0.0041056 - 0.0023560)\frac{m^3}{kg}}{(440.59 - 362.93)\frac{kJ}{kg}} = 0.0008394 \cdot \frac{ft^3}{BTU} \qquad dV_{dh} = 2.25 \times 10^{-5} \cdot \frac{m^3}{kJ}$$

Derivative approach:

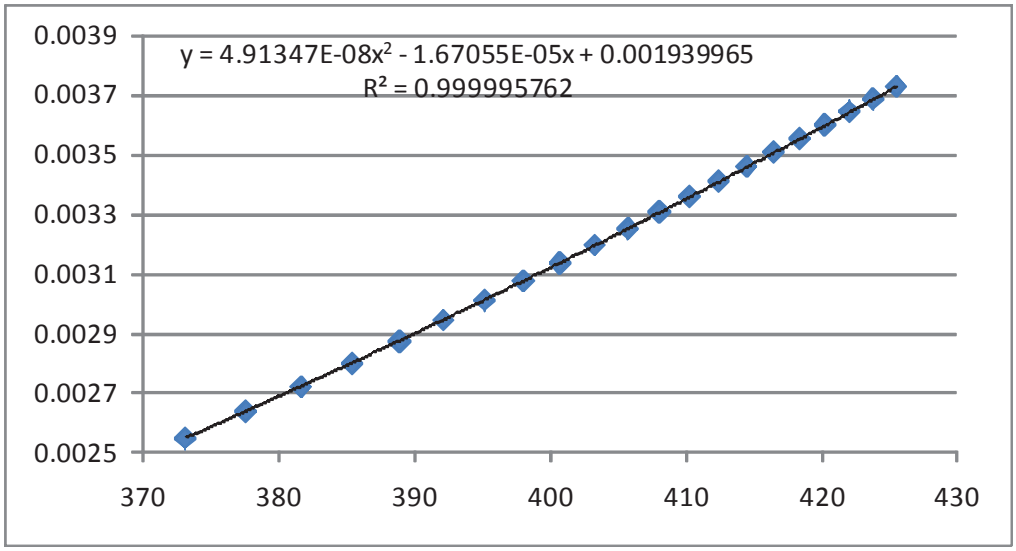

$$\text{Volume}(H) := 4.91347 \cdot 10^{-8} H^2 - 1.67055 \cdot 10^{-5} H + 0.001939965$$

$$\frac{d}{dH}\text{Volume}(H) \rightarrow 9.82694\text{e-}8 \cdot H - 0.0000167055 \qquad H := 405.78 \ \frac{kJ}{kg}$$

$$9.82694\text{e-}8 \cdot H - 0.0000167055 = 2.317 \times 10^{-5} \ \frac{m^3}{kJ}$$

virtually the same

This dV/dH value of will be used for relief valve sizing

$$\rho_{co2} := 307.50 \frac{kg}{m^3} = 19.2 \frac{lb}{ft^3}$$

$$\text{Heater}_{Power} := 6000W$$

Required Relief Rate for scenario 9

METHOD 1 API std 520

$$ReliefRate_{6000W_heater} := dV_{dh} \cdot Heater_{Power} \cdot \rho_{co2} = 329.894 \cdot \frac{lb}{hr}$$

Back Pressure Factor

$K_b := 1.0$

Coefficient of discharge

$K_d := 0.816$

Combination Factor

$K_c := 1.0$

$\Pi K := K_b \cdot K_d \cdot K_c$

$W_R := ReliefRate_{6000W_heater}$

Theoretical Mass flux rate

$G := 7030.31 \frac{lb}{s \cdot ft^2}$

found by methods listed in API std 520

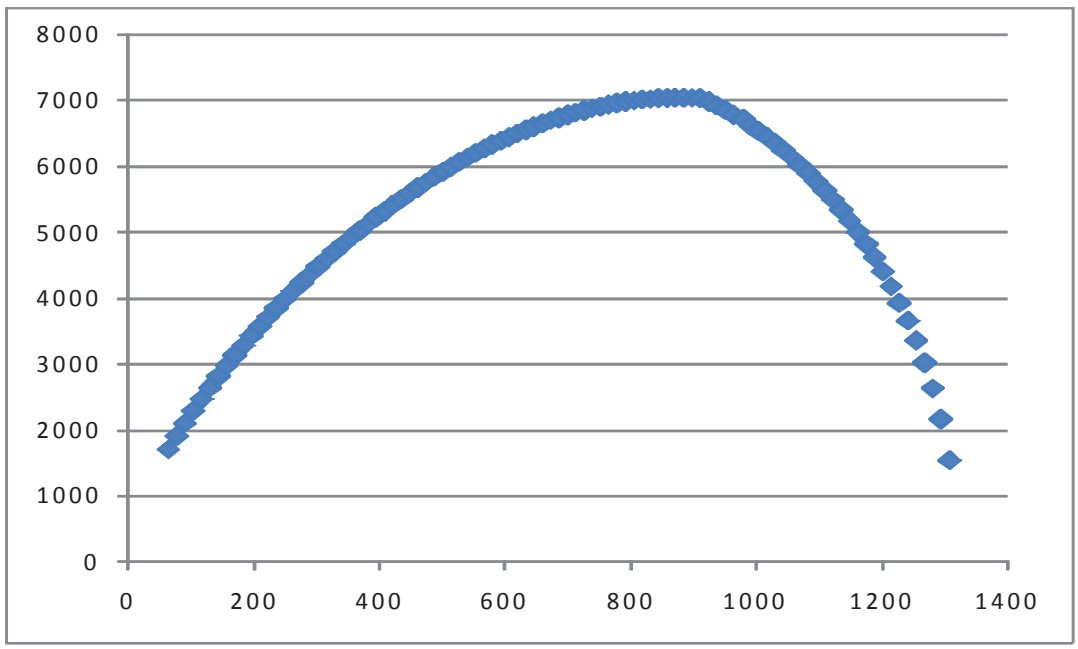

(API std 520 equation B.5)

$W_R = G \cdot Area_{orifice} \cdot \Pi K$

$$Area_{orifice} := \frac{W_R}{G \cdot \Pi K} = 0.0023 \cdot in^2$$

This area seems extremely small, however with a calculated relief pressure of 1320 psi the calculation may be accurate. Supercritical fluids also have a relatively low viscosity and high permeability causing them to flow quite easily, and needing only small orifice to relieve from. Subsequent orifice calculations will follow to test for consistency.

Required Relief Rate for scenario 9 METHOD 2

Relief Rate

$W_R = 329.9 \cdot \frac{lb}{hr}$

Unitless Relief Rate

$W_u := \frac{W_R}{\frac{lb}{hr}}$

Compressibility factor

$Z := .49103$

Coeff. of Discharge

$K_1 := K_d = 0.816$

C Value for CO2

$C := 345$

Backpressure Coefficient

$K_b = 1$

Molecular weight

$M := 44$

10% Overpressure

$P_1 := 1320$

Absolute

t $T := (120.8 + 460)$

$$Area := \frac{W_u \cdot \sqrt{T} \cdot \sqrt{Z}}{C \cdot K_1 \cdot P_1 \cdot K_b \cdot \sqrt{M}} = 0.0023 \quad in^2$$

which is very consistant with the previous method

Evaluation of Overpressure Scenario 15 - Exterior Fire

Calculate relief rate based on a blocked in fire scenario

Per API 521 sec. 5.15.1.1
To determine vapor generation, it is necessary to recognize only the portion of the piping that is wetted by its internal liquid and is equal to or less than 25 ft above the flame, in this case the entire blocked in area tank and surrounding piping will be evaluated for a worst case scenario.

Relief valve Set Pressure vessel Design P (MAWP)

$P_{set} := 1200 \cdot psi$

Equivalent Lenth of Longest length of pipe Blocked in pipe Vessel

$L_E := 60ft$

1" schedule 10 Pipe ID:

$D := 1.097in$

Total Wetted Surface Area:

$Pipe_{area} := \pi \cdot D \cdot L_E = 17.23 ft^2$

Physical Properties of supercritical fluid @ Relieving Conditions:

Molecular Weight

$M_w := 44.01 \cdot \frac{kg}{kgmole}$

Supercritical Temperature at relieving pressure

$T_{in} := (120.84 + 460)R$

Gas Compressibility

$Z := 0.49103$

Heat Capacity Ratio

$\gamma := 4.3081$

Heat Capacity

$Cpgas := 2.3788 \cdot \frac{kJ}{kg \cdot K}$

Viscocity

$\mu := 24.165 \mu Pa \cdot s$

Determination of Insulation Credit (per API 521 5.15.5.4)

This vessel will have either fiberglass insulation which will not burn.

Engineering Judgment:

Lab C is equipped with a fire alarm that will call the Fermilab fire department. Response time would be on the order of minutes.

Fermilab fire department is trained in dealing with cryogen containing vessels. As part of the CMS project they will receive a walkthrough of the CMS tank and associated equipment.

It is plausible that there could be a flammable box or papers near this vessel. Given the above, an insulation credit can be taken in the fire heat input calculation as specified in API 521.

The API 521 fire input rate will be used.

Insulation Thermal Conductivity (ambient conditions)

$k_{ins.ambient} := 0.034 \cdot \frac{W}{m \cdot K}$

Insulation Thickness

$Insul_{Th} := 2in$

API Calculation for F, with units added to factor for unit consistency

$$F := \frac{k_{ins.ambient} \cdot \left[(904 + 273.15)K - T_{in}\right]}{66570 \cdot \frac{kg}{s^3} \cdot Insul_{Th}} = 0.0086$$

API 521 eq. 13
sect. 5.15.5.4
The implied units of the API conversion factor are kg/sec^3.

CHECK: Same calculation forcing the units choice to use the API formula in unitless fashion. The result is the same.

$$\frac{k_{ins.ambient}\cdot\frac{1}{\frac{W}{m\cdot K}}\cdot\left[(904+273.15)K-T_{in}\right]\cdot\frac{1}{degC}}{66570\cdot Insul_{Th}\cdot\frac{1}{m}}=0.0086$$

Required Relief Rate for scenario 15 - Exterior Fire

$$Qv := 21000\cdot\left(\frac{BTU}{hr}\right)\cdot F\cdot\left(\frac{Pipe_{area}}{ft^2}\right)^{0.82} \qquad Qv = 1862\cdot\frac{BTU}{hr}$$

Equation from API 521

$$Qv = 545.8\cdot W$$

$$ReliefRate_{fire} := dV_{dh}\cdot Qv\cdot\rho_{co2} = 13.6\cdot\frac{kg}{hr}$$

Comparing Scenario Relief Rates

Rerate scenario 9 and 10 to 21% overpressure to then be comparable to fire case
(per ASME Sect. VIII- DIv.1, UG-133 (g)

Rerating is unneeded since the mass flow rate of the heater control failure is 11 times higher than the fire scenario. Heater control failure is the largest overpressure scenario and therefore will be used as the sizing basis.

$$\frac{ReliefRate_{6000W_heater}}{ReliefRate_{fire}} = 10.99 \text{ times higher}$$

Actual Relief Rate - Based on a selected relief valve flow chart

The following flow rate were given by the manufacturer Anderson Greenwood on their smallest orifice ("-4"; 0.049in^2) relief valve: $As := 0.049 \cdot in^2$

METHOD 1

$$W_{Relief} := G \cdot 0.049in^2 \cdot \Pi K = 7027 \cdot \frac{lb}{hr}$$

METHOD 2

$$W_{relieved} := \left(\frac{0.049 \cdot C \cdot K_1 \cdot P_1 \cdot K_b \cdot \sqrt{M}}{\sqrt{T} \cdot \sqrt{Z}} \right) \frac{lb}{hr} = 7152 \cdot \frac{lb}{hr}$$

METHOD 3

$$Wm_A := \Pi K \cdot 1320psi \cdot As \cdot \sqrt{\frac{\gamma \cdot M_w}{T_{in} \cdot R_g \cdot Z} \cdot \left(\frac{2}{\gamma + 1} \right)^{\frac{\gamma+1}{\gamma-1}}} \qquad Wm_A = 10215 \cdot \frac{lb}{hr} \qquad Vol_{Relief} := \frac{Wm_A}{\rho_{co2}}$$

Relief needed: $W_R = 329.9 \cdot \frac{lb}{hr}$

This shows even the smallest orifice size is 30 times oversized.
This relief valve will be chosen for this vessel as well as all pipes

Check of Relief Valve Inlet Pipe Pressure Drop

Per ASME Sect. VIII- Div. 1 methods, the selected Anderson Greenwood "-4" orifice relief valve has a capacity in excess of capacity estimated using the conservative methods of API 520/521.

The multiple relief valves will be mounted directly on the piping and have outlet piping which extends outdoors. the length of the longest pipe will be used as the length of the inlet pipe to be conservative.

$$Length := L_E = 60\,ft$$

$$Diam := 1.097in \qquad Area := \frac{\pi}{4} \cdot Diam^2 = 0.9 \cdot in^2$$

$$Velocity := \frac{Vol_{Relief}}{Area}$$

$$Re := \frac{\rho_{co2} \cdot Velocity \cdot Diam}{\mu} = 2.4 \times 10^6$$

Relative Roughness

$$\varepsilon := 0.046\text{mm} = 1.8 \times 10^{-3} \cdot \text{in}$$

ColeBrook Implicit equation

Given $\quad \dfrac{1}{\sqrt{f}} = -2\log\left(\dfrac{\varepsilon}{3.7\text{Diam}} + \dfrac{2.51}{\text{Re}\cdot\sqrt{f}}\right) \qquad f := \text{Find}(f) = 0.022359$

Crane 410 eq. 6-8 (unitless to psi)

Crane 410 eq. 6-8 for head, converted to pressure

$$\Delta P := f\cdot\left(\frac{\text{Length}}{\text{Diam}}\cdot\frac{\text{Velocity}^2}{2}\cdot\rho_{co2}\right) = 15.42\cdot\text{psi} \quad \Delta P_1 := 3.36\cdot 10^{-6}\cdot\frac{f\cdot\dfrac{\text{Length}}{\text{ft}}\cdot\left(\dfrac{Wm_A}{\dfrac{\text{lb}}{\text{hr}}}\right)^2}{\dfrac{\rho_{co2}}{\dfrac{\text{lb}}{\text{ft}^3}}\cdot\left(\dfrac{\text{Diam}}{\text{in}}\right)^5} = 15.42$$

$$\frac{\Delta P}{1334.3\text{psi}} = 1.1556\cdot\%$$ which is less than 3%, the inlet piping is sufficient

Check of Relief Valve Outlet Pipe Pressure Drop

Equivalent length used is conservative representation of straight pipe and fitting losses. The relief valve will be mounted on nearby piping to the vessel. Outlet piping will be routed outside. Relief valve will flash supercritical CO2 into vapor/solid mixture.

Solid "snow" could plug outlet lines, therefore the largest piping size which will still yield a sonic exit velocity is desired. Properties for CO2 will be used as close as possible to this relieving mixture which will be roughly 85-90% vapor quality and 10-15% solid by mass. For this calculation, 100% vapor will be analyzed to be conservative.

Temperature (°F)	Pressure (psig)	Density (lbm/ft³)	Volume (ft³/lbm)	Enthalpy (Btu/lbm)	Entropy (Btu/lbm-°R)
-68.000	5.0000	0.20624	4.8487	189.16	0.58018
-109.00	*0.00000000000000037765*	*0.17103*	*5.8469*	*181.88*	*0.57381*
-100.00	*5.0000*	*0.22612*	*4.4225*	*183.16*	*0.56419*

Comp. Factor	Heat of Vapor. (Btu/lbm)	Viscosity (lbm/ft-s)	Kin. Viscosity (ft²/s)
0.98095	Undefined	0.0000073552	0.000035663
0.97933	*0.00000*	*Not calculated*	*Not calculated*
0.97433	*0.00000*	*Not calculated*	*Not calculated*

estimated density relieved

$$\rho_{relieved} := 0.22612 \frac{lb}{ft^3}$$

estimated kinematic viscosity

$$\nu := 0.000035 \frac{ft^2}{s}$$

$$Vol_{relieved} := \frac{Wm_A}{\rho_{relieved}} = 4.5 \times 10^4 \cdot \frac{ft^3}{hr}$$

ID of 2" schedule 10 pipe

$$Diam := 2.157in \qquad Area := \frac{\pi}{4} \cdot Diam^2 = 3.7 \cdot in^2 \qquad Length := 25ft$$

Comp. Factor

$$Z := 0.97433 \qquad Velocity := \frac{Vol_{relieved}}{Area} \qquad Re := \frac{Velocity \cdot Diam}{\nu} = 2.5 \times 10^6$$

Relative Roughness from Crane 410 for commercial steel pipe

$$\varepsilon := 0.00015ft$$

ColeBrook Implicit equation

Given $\frac{1}{\sqrt{f}} = -2\log\left(\frac{\varepsilon}{3.7Diam} + \frac{2.51}{Re\cdot\sqrt{f}}\right)$ $f := Find(f) = 0.01894$

mass flow rate

$q_m := \frac{Wm_A}{\frac{lb}{hr}} = 10215.4$

diameter of outlet pipe

$d := \frac{Diam}{ft} = 0.18$

outlet pressure

$p_2 := 14.3$

-100F outlet temperature

$T_{outlet} := (460 - 100)$

outlet piping

$L := \frac{Length}{ft} = 25$

Mach number

$$Ma_2 := 1.702\cdot 10^{-5}\cdot\left(\frac{q_m}{p_2\cdot d^2}\right)\cdot\left(\frac{Z\cdot T_{outlet}}{M}\right)^{0.5} = 1.062$$

Using equation 26 from API std 521 to find the pressure (p2) just after the relief valve

$$\frac{f\cdot L}{d} = \frac{1}{Ma_2^{\,2}}\cdot\left(\frac{p_1}{p_2}\right)^2\cdot\left[1-\left(\frac{p_2}{p_1}\right)^2\right] - \ln\left(\frac{p_1}{p_2}\right)^2$$

$p_1 := Find(p_1) = 30.8$

$\Delta P := (p_1 - p_2)psi = 16.5\,psi$

$$\frac{\Delta P}{1334.3psi} = 1.2\cdot\%$$

check for sonic flow speed

$$p_{crit} := 1.702 \cdot 10^{-5} \cdot \left(\frac{q_m}{d^2}\right) \cdot \left(\frac{Z \cdot T}{M}\right)^{0.5} = 19.3$$

Which is above the outlet pressure showing we have sonic flow. High velocity flow is desireable in a CO2 relieving system to be sure the outlet piping will be swept of solid CO2.

from API std 521

If the critical pressure is less than the pipe outlet pressure, the flow is subsonic. If the critical pressure is greater than the pipe outlet pressure, the flow is sonic and $Ma_2 = 1$. Therefore, the pipe inlet pressure, p_1, is calculated from Equation (25) with p_2 equal to the critical pressure.

$$\frac{f \cdot l}{d} = \frac{1}{Ma_2^2}\left[\left(\frac{p_1}{p_2}\right)^2\right]\left[1-\left(\frac{p_2}{p_1}\right)^2\right] - \ln\left(\frac{p_1}{p_2}\right)^2 \qquad (26)$$

recalculated for sonic flow speed

$Ma_2 := 1$ $\qquad$ $p_2 := p_{crit}$

$$\frac{f \cdot L}{d} = \frac{1}{Ma_2^{\,2}} \cdot \left(\frac{p_1}{p_2}\right)^2 \cdot \left[1 - \left(\frac{p_2}{p_1}\right)^2\right] - \ln\left(\frac{p_1}{p_2}\right)^2 \qquad p_1 := \mathrm{Find}(p_1) = 39.3$$

$$\Delta P := (p_1 - p_2)\,\mathrm{psi} = 20\,\mathrm{psi}$$

$$\frac{\Delta P}{1334.3\,\mathrm{psi}} = 1.5 \cdot \%$$

which is less than 10%, the outlet piping is sufficient

This calculation was done for 25 feet of 2" pipe. Other relief valves are 1" diameter pipes, though their length is much shorter, up to only 5.5 feet.

Check of Relief Valve Outlet Pipe Pressure Drop with shorter 1" outlet

ID of 1" schedule 10 pipe

$Diam := 1.097in$ $\quad Area := \frac{\pi}{4} \cdot Diam^2 = 0.9 \cdot in^2$ $\quad Length := 5.5ft$

Comp. Factor

$Z := 0.97433$ $\quad Velocity := \frac{Vol_{relieved}}{Area}$ $\quad Re := \frac{Velocity \cdot Diam}{\nu} = 5 \times 10^6$

Relative Roughness from Crane 410 for commercial steel pipe

$\varepsilon := 0.00015ft$

ColeBrook Implicit equation

Given $\quad \frac{1}{\sqrt{f}} = -2\log\left(\frac{\varepsilon}{3.7Diam} + \frac{2.51}{Re \cdot \sqrt{f}}\right)$ $\quad f := Find(f) = 0.022279$

mass flow rate

$q_m := \frac{Wm_A}{\frac{lb}{hr}} = 10215.4$

diameter of outlet pipe

$d := \frac{Diam}{ft} = 0.091$

outlet pressure

$p_2 := 14.3$

-100F outlet temperature

$T_{outlet} := (460 - 100)$

outlet piping

$L := \frac{Length}{ft} = 5.5$

Mach number

$$Ma_2 := 1.702 \cdot 10^{-5} \cdot \left(\frac{q_m}{p_2 \cdot d^2}\right) \cdot \left(\frac{Z \cdot T_{outlet}}{M}\right)^{0.5} = 4.108$$

Using equation 26 from API std 521 to find the pressure (p2) just after the relief valve

$$\frac{f \cdot L}{d} = \frac{1}{Ma_2^{\,2}} \cdot \left(\frac{p_1}{p_2}\right)^2 \cdot \left[1 - \left(\frac{p_2}{p_1}\right)^2\right] - \ln\left(\frac{p_1}{p_2}\right)^2$$

$p_1 := \mathrm{Find}(p_1) = 156.9$

$\Delta P := (p_1 - p_2)\mathrm{psi} = 142.6\,\mathrm{psi}$

$$\frac{\Delta P}{1334.3\mathrm{psi}} = 10.7 \cdot \%$$

check for sonic flow speed

$$p_{crit} := 1.702 \cdot 10^{-5} \cdot \left(\frac{q_m}{d^2}\right) \cdot \left(\frac{Z \cdot T}{M}\right)^{0.5} = 74.6$$

Which is above the outlet pressure showing we have sonic flow. High velocity flow is desireable in a CO2 relieving system to be sure the outlet piping will be swept of solid CO2.

recalculated for sonic flow speed

$Ma_2 := 1$ $\quad$ $p_2 := p_{crit}$

$$\frac{f \cdot L}{d} = \frac{1}{Ma_2^{\,2}} \cdot \left(\frac{p_1}{p_2}\right)^2 \cdot \left[1 - \left(\frac{p_2}{p_1}\right)^2\right] - \ln\left(\frac{p_1}{p_2}\right)^2$$

$p_1 := \mathrm{Find}(p_1) = 119.4$

$\Delta P := (p_1 - p_2)\mathrm{psi} = 44.8\,\mathrm{psi}$

$$\frac{\Delta P}{1334.3\mathrm{psi}} = 3.4 \cdot \%$$

Which is less than 10%, the outlet piping is sufficient

5. Welding Information

The transfer line was assembled in two phases due to the long lengths and bends would be impossible to move through doorways and such. Maneuverable sections of the piping were fabricated in Lab F, MAB, and PC4. These sections were then joined and connected either by welding, Hart Unions, or flanges once in place. According to B31.3 Section 341, all piping in Normal Fluid Service shall be examined. Normally radiographic examination of at least 5% of the welds is required but in certain cases where the use of radiographic examination is difficult or impossible in-process examination is allowed in lieu of radiography. The shop fabrication was done by multiple Fermilab welders. Their qualifications are in section 6. An argon gas purge was used before and while performing all piping welds.

6. Welders Qualifications

Fermilab

Fermi National Accelerator Laboratory

Technical Division-Machine Shop

Welder Performance Qualification Record

Welder's Name	*Michael Cooper*			**FNAL #**	*12271N*	**ASME #**	*W-7*
Welding Process:	**1st**	*GTAW*	Type	*Manual*	**2nd**		Type
Performed in accordance with:	*Fermi WPS-SS-8-001*						

Joint:	~~Fillet:~~		~~Production Weld~~	*Test Coupon*		
Groove:	~~Double Welded:~~	~~Yes~~	*No*			
	Single Welded:	~~Metal Fused~~	~~Metal Non-Fused~~	~~Non-Metal~~	*Open Root*	Consumable Insert
		~~With Solid Backing~~	*Without Solid Backing*			

Base Metal:	Specification:	*SA 213, Type 304/304L*	TO	*SA 213, Type 304/304L*	*ASME P #8, Gp 1*	TO	*ASME P # 8, Gp 1*
Plate	**Pipe**				**Tube**		
Actual Thickness:	Nominal Diameter:		Actual Diameter		Overall Diameter: *0.250"*		
Qualified Range:	Wt/Schedule:		Qualified Thickness Range		Wall: *0.035"*		
	Actual Thickness		Qualified Diameter Range: .		Qualified Thickness Range: *0.070" Maximum*		
					Qualified Diameter Range: *0.250" Minimum*		

Filler:	**1st Process**		**2nd Process**	
	Specification: *5.9*	Class: *308/308L*	Specification:	Class:
	Diameter(s): *.035, .045, 1/16*		Diameter(s):	
	F #: *6*		F #:	
	Deposit Thickness: *0.035*	Range Qualification: *0.070 Maximum*	Deposit Thickness:	Range Qualification:

Welding Position: *6G*	If Vertical: *Uphill* ~~Down~~				
Gas (Type & Composition:	Shielding: *Argon 99.9%*		Root Side Backing - *Argon 99.9%*		
Electrical Characteristics	Type Current	~~AC~~	~~DCEP~~	*DCEN*	
	~~Transfer GMAW~~	~~Spray~~	~~Globular~~	~~Pulse~~	~~Short Circuit~~

Visual Inspection					
Appearance:	*Satisfactory*	Undercut:	*None*	Piping Porosity:	*None*

Guided Bend Test					
Type and Figure	Results	Type and Figure	Results	Type and Figure	Results
Test Conducted by:			Lab Test #:		Date:

Radiographic Test			
Results: *Satisfactory*		Per ASME IX-2007 and AWS D1.1-06	
Radiographer: *Alloyweld Inspection Co., Inc.*	Examiner: *Jennifer Anaya-Level II*	Register # *5304*	Date: *6/7/2010*

Fillet Weld Test Results				
Fracture Test: (Location, Nature, and size of Crack or Tear in Specimen)				
Length of Weld:	Length of Defect:	Percent of Defect		
Macro Test: Fusion				
Appearance: Fillet Size	inch X	inch	☐ Convex	☐ Concave
Test Conducted by:		Lab Test #:		

Test Verified by: *Roger Hiller, 00362N*	Verification Report #*5112010-2RH*	Signature

We certify that the statements in this record are correct and that the test welds were prepared, welded, and tested in accordance with the requirements of **ASME IX-2007 & AWS D1.1-06** ***Fermi National Accelerator Laboratory***

By: Roger Hiller 00362N Authorized Representative	Date: *6/7/2010*

Fermilab

Fermi National Accelerator Laboratory

Technical Division-Machine Shop

Welder Performance Qualification Record

Welder's Name	*Mike Cooper*			**FNAL #**	*12271N*	**ASME #**	*W-7*
Welding Process:	**1st**	*GTAW*	Type	*Manual*	**2nd**		Type
Performed in accordance with:	*Fermi WPS-SS-9-002*						

Joint:	~~Fillet:~~		~~Production Weld~~	*Test Coupon*		
Groove:	Double Welded:	~~Yes~~	*No*			
	Single Welded	~~Metal Fused~~	~~Metal Non-Fused~~	~~Non-Metal~~	*Open Root*	Consumable Insert
		~~With Solid Backing~~	*Without Solid Backing*			

Base Metal:	Specification:	*SA 213, Type 304/304L*	TO	*SA 213, Type 304/304L*	*ASME P #8, Gp 1*	TO	*ASME P # 8, Gp 1*
Plate		**Pipe**			**Tube**		
Actual Thickness:		Nominal Diameter:		Actual Diameter	Overall Diameter: *0.500"*		
Qualified Range:		Wt/Schedule:		Qualified Thickness Range	Wall: *0.095"*		
		Actual Thickness		Qualified Diameter Range	Qualified Thickness Range: *0.190" Maximum*		
					Qualified Diameter Range: *0.500" Minimum*		

Filler:	**1st Process**		**2nd Process**	
	Specification: *5.9*	Class: *308/308L*	Specification:	Class:
	Diameter(s): *.045, 1/16 , 3/32*		Diameter(s):	
	F #: *6*		F #:	
	Deposit Thickness: *0.095*	Range Qualification: *0.190 Maximum*	Deposit Thickness:	Range Qualification:

Welding Position: *6G*	If Vertical: *Uphill* ~~Down~~				
Gas (Type & Composition:	Shielding: *Argon 99.9%*		Root Side Backing - *Argon 99.9%*		
Electrical Characteristics	Type Current	~~AC~~	~~DCEP~~	*DCEN*	
	~~Transfer GMAW~~	~~Spray~~	~~Globular~~	~~Pulse~~	~~Short Circuit~~

Visual Inspection					
Appearance:	*Satisfactory*	Undercut:	*None*	Piping Porosity:	*None*

Guided Bend Test					
Type and Figure	Results	Type and Figure	Results	Type and Figure	Results
Test Conducted by:			Lab Test #:		Date:

Radiographic Test			
Results: *Satisfactory*		Per ASME IX-2007 and AWS D1.1-06	
Radiographer: *Alloyweld Inspection Co., Inc.*	Examiner: *Jennifer Anaya-Level II*	Register #: *5088*	Date: *5/24/2010*

Fillet Weld Test Results				
Fracture Test: (Location, Nature, and size of Crack or Tear in Specimen)				
Length of Weld:	Length of Defect:		Percent of Defect	
Macro Test: Fusion				
Appearance: Fillet Size	inch X	inch	❑ Convex	❑ Concave
Test Conducted by:		Lab Test #:		

Test Verified by: *Roger Hiller 00362N*	Verification Report #*5272010-2*	Signature

We certify that the statements in this record are correct and that the test welds were prepared, welded, and tested in accordance with the requirements of **ASME IX-2007 & AWS D1.1-06** ***Fermi National Accelerator Laboratory***

By: Roger Hiller 00362N Authorized Representative	Date: *6/16/2010*

Fermilab

Fermi National Accelerator Laboratory

Technical Division-Machine Shop

Welder Performance Qualification Record

Welder's Name	*Michael Cooper*				**FNAL #**	*12271*		**ASME #**	*W-7*
Welding Process:	**1st**	*GTAW*	Type	*Manual*	**2nd**			Type	
Performed in accordance with:	*Fermi WPS SS-3,R4*								

Joint:	~~Fillet:~~		~~Production Weld~~	*Test Coupon*		
Groove:	~~Double Welded:~~	~~Yes~~	No			
	Single Welded:	~~Metal Fused~~	~~Metal Non-Fused~~	~~Non-Metal~~	*Open Root*	~~Consumable Insert~~
		~~With Solid Backing~~	*Without Solid Backing*			

Base Metal:	Specification:	*SA 312, Gr 304*	TO	*SA 312, Gr 304*	ASME P #8	TO	ASME P # 8

~~Plate~~	**Pipe**		~~Tube~~
Actual Thickness:	Nominal Diameter: 4	Actual Diameter: *4.5"*	Overall Diameter:
Qualified Range:	Wt/Schedule: *Sch. 80*	Qualified Thickness Range: *0-0.674*	Wall:
	Actual Thickness: *0.337*	Qualified Diameter Range: *2.875" minimum*	Qualified Thickness Range:
			Qualified Diameter Range:

Filler:	**1st Process**		**2nd Process**	
	Specification: *SFA 5.9*	Class: *ER 308/308L*	Specification:	Class:
	Diameter(s): *1/16Ø, 3/32Ø*		Diameter(s):	
	F #: *6*		F #:	
	Deposit Thickness: *0.337"*	Range Qualification: *0-0.674"*	Deposit Thickness:	Range Qualification:

Welding Position: *6G*	If Vertical: *Upward* ~~Down~~				
Gas (Type & Composition:	Shielding: *Argon 99.9%*		Root Side Backing	*Argon 99.9%*	
Electrical Characteristics	Type Current	~~AC~~	~~DCEP~~	*DCEN*	
	Transfer GMAW	~~Spray~~	~~Globular~~	~~Pulse~~	~~Short Circuit~~

For Information Only		**Machine Welding**		
Filler Metal Trade Name:		Control:	❑ Visual	❑ Remote Visual
SAW Flux Trade Name:		Arc Voltage Control:	❑ Auto	❑ Other:
Shielding Gas Trade Name:		Joint Tracking:	❑ Yes	❑ No

Visual Inspection					
Appearance:	Satisfactory	Undercut:		Piping Porosity:	

Guided Bend Test					
Type and Figure	Results	Type and Figure	Results	Type and Figure	Results
Test Conducted by:			Lab Test #:		Date:

Radiographic Test			
Results: Satisfactory		Per ASME IX-2007 and AWS D1.1-06	
Radiographer: *Alloyweld Inspection Co., Inc.*	Examiner: *Jennifer Anaya-Level II*	*Register #5304*	Date: *6/7/2010*

Fillet Weld Test Results			
Fracture Test:(Location, Nature, and size of Crack or Tear in Specimen)			
Length of Weld:	Length of Defect:	Percent of Defect	
Macro Test: Fusion			
Appearance: Fillet Size inch X inch		❑ Convex	❑ Concave
Test Conducted by:		Lab Test #:	

We certify that the statements in this record are correct and that the test welds were prepared, welded, and tested in accordance with the requirements of **ASME IX-2007 & AWS D1.1-06** ***Fermi National Accelerator Laboratory***

By:	Date:
Roger E Miller	6/16/2010

FERMILAB COPY

Welder Qualification Test Record

Welder's Name Michael Cooper Ident No. 122271 Date 03/19/99

Welding Process GTAW Type Manual

Test in Accordance With WPS # ES-155003 Root Open

Material Specification SA 53-B To Material Specification SA 53-B

P-No 1 To P-No 1 Thickness .280" Diam 6"

Filler Metal Specification SFA A5.18 Classification ER-70S-2 F-No 6

Thickness Deposited .280

Backing Argon Gas Shielding Argon

Position 6-G Progression Upward

Electrical Characteristics: Current DC Polarity Straight

Thickness Qualified .560" Max Diameter Qualified 2-7/8" O.D. and over

GUIDED BEND TEST RESULTS

Specimen No	Type	Figure	Results
1	Face	QW-462.3a	Acceptable
2	Face	QW-462.3a	Acceptable
3	Root	QW-462.3a	Acceptable
4	Root	QW-462.3a	Acceptable

Test Conducted By IFR Engineering Test No. 008-09-01 Date 3/19/99

We certify that the statements in this record are correct and that the test welds were prepared, welded and tested in accordance with the requirements of Section IX of the ASME Code.

By: Roger Estelle

Date: 4/22/99

FERMILAB

COPY

Welder Qualification Test Record

Welder's Name Michael Cooper Ident No. 122271 Date 03/19/99

Welding Process SMAW Type Manual

Test in Accordance With WPS # ES-155000 Root Open

Material Specification SA 53-B To Material Specification SA 53-B

P-No 1 To P-No 1 Thickness .432" Diam 6"

Filler Metal Specification SFA A5.1 Classification E6010/E7018 F-No F3/F4

Thickness Deposited .432"

Backing None Gas Shielding N/A

Position 6-G Progression Upward

Electrical Characteristics: Current DC Polarity Reverse

Thickness Qualified .864" Max Diameter Qualified 2-7/8" O.D. and over

GUIDED BEND TEST RESULTS

Specimen No	Type	Figure	Results
1	Side	QW-462.2	Acceptable
2	Side	QW-462.2	Acceptable
3	Side	QW-462.2	Acceptable
4	Side	QW-462.2	Acceptable

Test Conducted By IFR Engineering Test No. 008-09-01 Date 3/19/99

We certify that the statements in this record are correct and that the test welds were prepared, welded and tested in accordance with the requirements of Section IX of the ASME Code.

By: [illegible]

Date: 4/22/99

Fermilab

Fermi National Accelerator Laboratory

Technical Division-Machine Shop

Welder Performance Qualification Record

Welder's Name	*Michael Jeeninga*			**FNAL #**	*15566N*	**ASME #**	*W-3*
Welding Process:	**1st**	*GTAW*	Type	*Manual*	**2nd**	Type	
Performed in accordance with:	*Fermi WPS SS-3,R4*						

Joint:	~~Fillet:~~		~~Production Weld~~	*Test Coupon*		
Groove:	~~Double Welded:~~	~~Yes~~	No			
	Single Welded:	~~Metal Fused~~	~~Metal Non-Fused~~	~~Non-Metal~~	*Open Root*	~~Consumable Insert~~
		~~With Solid Backing~~	*Without Solid Backing*			

Base Metal:	Specification:	*SA 312, Gr 304*	TO	*SA 312, Gr 304*	*ASME P #8, Gp. 1*	TO	*ASME P # 8, Gp. 1*

~~Plate~~	**Pipe**		~~Tube~~
Actual Thickness:	Nominal Diameter: 4	Actual Diameter: *4.5"*	Overall Diameter:
Qualified Range:	Wt/Schedule: *Sch. 80*	Qualified Thickness Range: *0-0.674*	Wall:
	Actual Thickness: *0.337*	Qualified Diameter Range: *2.875" minimum*	Qualified Thickness Range:
			Qualified Diameter Range:

Filler:	**1st Process**		**2nd Process**	
	Specification: *SFA 5.9*	Class: *ER 308/308L*	Specification:	Class:
	Diameter(s): *1/16"Ø, 3/32"Ø*		Diameter(s):	
	F #: *6*		F #:	
	Deposit Thickness: *0.0337*	Range Qualification: *0-0.674"*	Deposit Thickness:	Range Qualification:

Welding Position: *6G*	If Vertical: *Upward* ~~Down~~					
Gas (Type & Composition:	Shielding: *Argon 99.9%*			Root Side Backing	*Argon 99.9%*	
Electrical Characteristics	Type Current	~~AC~~	~~DCEP~~	*DCEN*		
	Transfer GMAW		~~Spray~~	~~Globular~~	~~Pulse~~	~~Short Circuit~~

Visual Inspection					
Appearance:	*Satisfactory*	Undercut:	*None Visually Observed*	Piping Porosity:	*None Visually Observed*

Guided Bend Test					
Type and Figure	Results	Type and Figure	Results	Type and Figure	Results
Test Conducted by:			Lab Test #:		Date:

Radiographic Test			
Results: Satisfactory		Per ASME IX-2007 and AWS D1.1-06	
Radiographer: *Alloyweld Inspection Co., Inc.*	Examiner: *Jennifer Anaya-Level II*	*Register #6469*	Date: *8/04/2010*

Fillet Weld Test Results			
Fracture Test:(Location, Nature, and size of Crack or Tear in Specimen)			
Length of Weld:	Length of Defect:	Percent of Defect	
Macro Test: Fusion			
Appearance: Fillet Size inch X inch		☐ Convex	☐ Concave
Test Conducted by:		Lab Test #:	

Test Verified by: *Michael Reynolds, 03993N*	Verification Report *#7302010-1-MR*	Michael P. Reynolds Signature

We certify that the statements in this record are correct and that the test welds were prepared, welded, and tested in accordance with the requirements of **ASME IX-2007** ***Fermi National Accelerator Laboratory***

By: *Roger Hiller. 00362N* Roger Hiller	Date: *8/04/2010*

Fermilab — *Fermi National Accelerator Laboratory*

Technical Division-Machine Shop

Welder Performance Qualification Record

Welder's Name	*Michael Jeeninga*				**FNAL #**	*15566N*	**ASME #**	*W-3*
Welding Process:	**1st**	*GTAW*	Type	*Manual*	**2nd**		Type	
Performed in accordance with:	*Fermi WPS-SS-8-001*							

Joint:	~~Fillet:~~		~~Production Weld~~	*Test Coupon*		
Groove:	~~Double Welded:~~	~~Yes~~	*No*			
	Single Welded:	~~Metal Fused~~	~~Metal Non Fused~~	~~Non Metal~~	*Open Root*	Consumable Insert
		~~With Solid Backing~~	*Without Solid Backing*			

Base Metal:	Specification:	*SA 213, Type 304/304L*	TO	*SA 213, Type 304/304L*	*ASME P #8, Gp 1*	TO	*ASME P # 8, Gp 1*
Plate	**Pipe**				**Tube**		
Actual Thickness:	Nominal Diameter:		Actual Diameter		Overall Diameter: *0.250"*		
Qualified Range:	Wt/Schedule:		Qualified Thickness Range		Wall: *0.035"*		
	Actual Thickness		Qualified Diameter Range		Qualified Thickness Range: *0.070" Maximum*		
					Qualified Diameter Range: *0.250" Minimum*		

Filler:	**1st Process**		**2nd Process**	
	Specification: *5.9*	Class: *308/308L*	Specification:	Class:
	Diameter(s): *.035, .045, 1/16*		Diameter(s):	
	F #: *6*		F #:	
	Deposit Thickness: *0.035*	Range Qualification: *0.070 Maximum*	Deposit Thickness:	Range Qualification:

Welding Position: *6G*	If Vertical: *Uphill* ~~Down~~				
Gas (Type & Composition:	Shielding: *Argon 99.9%*		Root Side Backing - *Argon 99.9%*		
Electrical Characteristics	Type Current	~~AC~~	~~DCEP~~	*DCEN*	
	~~Transfer GMAW~~	~~Spray~~	~~Globular~~	~~Pulse~~	~~Short Circuit~~

Visual Inspection					
Appearance:	*Satisfactory*	Undercut:	*None*	Piping Porosity:	*None*

Guided Bend Test					
Type and Figure	Results	Type and Figure	Results	Type and Figure	Results
Test Conducted by:			Lab Test #:		Date:

Radiographic Test			
Results: *Satisfactory*		Per ASME IX-2007	
Radiographer: *Alloyweld Inspection Co., Inc.*	Examiner: *Jennifer Anaya-Level II*	Register # *6469*	Date: *8/4/2010*

Fillet Weld Test Results			
Fracture Test: (Location, Nature, and size of Crack or Tear in Specimen)			
Length of Weld:	Length of Defect:	Percent of Defect	
Macro Test: Fusion			
Appearance: Fillet Size inch X inch		❑ Convex	❑ Concave
Test Conducted by:		Lab Test #:	

Test Verified by: *Roger Hiller, 00362N*	Verification Report *#7302010-3RH*	Signature

We certify that the statements in this record are correct and that the test welds were prepared, welded, and tested in accordance with the requirements of **ASME IX-2007 & AWS D1.1-06** ***Fermi National Accelerator Laboratory***

By: Roger Hiller 00362N Authorized Representative	Date: *8/04/2010*

Fermilab

Fermi National Accelerator Laboratory

Technical Division-Machine Shop

Welder Performance Qualification Record

Welder's Name	*Mike Jeeninga*				**FNAL #**	*15566N*	**ASME #**	*W-3*
Welding Process:	**1st**	*GTAW*	Type	*Manual*	**2nd**		Type	
Performed in accordance with:	*Fermi WPS-SS-9-002*							

Joint:	~~Fillet:~~		~~Production Weld~~	*Test Coupon*		
Groove:	Double Welded:	~~Yes~~	*No*			
	Single Welded	~~Metal Fused~~	~~Metal Non-Fused~~	~~Non-Metal~~	*Open Root*	Consumable Insert
		~~With Solid Backing~~	*Without Solid Backing*			

Base Metal:	Specification:	*SA 213, Type 304/304L*	TO	*SA 213, Type 304/304L*	*ASME P #8, Gp 1*	TO	*ASME P # 8, Gp 1*
Plate	**Pipe**				**Tube**		
Actual Thickness:	Nominal Diameter:			Actual Diameter	Overall Diameter: *0.500"*		
Qualified Range:	Wt/Schedule:			Qualified Thickness Range	Wall: *0.095"*		
	Actual Thickness			Qualified Diameter Range	Qualified Thickness Range: *0.190" Maximum*		
					Qualified Diameter Range: *0.500" Minimum*		

Filler:	**1st Process**		**2nd Process**	
	Specification: *5.9*	Class: *308/308L*	Specification:	Class:
	Diameter(s): *.045, 1/16 , 3/32*		Diameter(s):	
	F #: *6*		F #:	
	Deposit Thickness: *0.095*	Range Qualification: *0.190 Maximum*	Deposit Thickness:	Range Qualification:

Welding Position: *6G*	If Vertical: *Uphill* ~~Down~~				
Gas (Type & Composition:	Shielding: *Argon 99.9%*		Root Side Backing - *Argon 99.9%*		
Electrical Characteristics	Type Current	~~AC~~	~~DCEP~~	*DCEN*	
	~~Transfer-GMAW~~	~~Spray~~	~~Globular~~	~~Pulse~~	~~Short Circuit~~

Visual Inspection					
Appearance:	*Satisfactory*	Undercut:	*None*	Piping Porosity:	*None*

Guided Bend Test					
Type and Figure	Results	Type and Figure	Results	Type and Figure	Results
Test Conducted by:			Lab Test #:		Date:

Radiographic Test			
Results: *Satisfactory*		Per ASME IX-2007 and AWS D1.1-06	
Radiographer: *Alloyweld Inspection Co., Inc.*	Examiner: *Jennifer Anaya-Level II*	Register #: *6469*	Date: *8/4/2010*

Fillet Weld Test Results			
Fracture Test: (Location, Nature, and size of Crack or Tear in Specimen)			
Length of Weld:	Length of Defect:	Percent of Defect	
Macro Test: Fusion			
Appearance: Fillet Size	inch X inch	❑ Convex	❑ Concave
Test Conducted by:		Lab Test #:	

Test Verified by: *Roger Hiller 00362N*	Verification Report *#7272010-2RH*	Signature

We certify that the statements in this record are correct and that the test welds were prepared, welded, and tested in accordance with the requirements of **ASME IX-2007 & AWS D1.1-06** ***Fermi National Accelerator Laboratory***

By: Roger Hiller 00362N Authorized Representative	Date: *8/04/2010*

Fermilab

Fermi National Accelerator Laboratory

Technical Division-Machine Shop

Welder Performance Qualification Record

Welder's Name	*Ryan Mahoney*			**FNAL #**	*15470N*	**ASME #**	*W-2*
Welding Process:	**1st**	*GTAW*	Type	*Manual*	**2nd**		Type
Performed in accordance with:	*Fermi WPS CS-5-001*						

Joint:	~~Fillet:~~		~~Production Weld~~	Test Coupon		
Groove:	~~Double Welded:~~	~~Yes~~	No			
	Single V Groove:	~~Metal Fused~~	~~Metal Non-Fused~~	~~Non-Metal~~	*Open Root*	~~Consumable Insert~~
		~~With Solid Backing~~	*Without Solid Backing*			

Base Metal:	Specification:	*ASME P # 1, Group 1*		TO	*ASME P # 1, Group 1*		
~~**Plate**~~		~~**Pipe**~~				**Tube**	
Actual Thickness:		Nominal Diameter:		Actual Diameter:		Overall Diameter:	*2.75"Ø*
Qualified Range:		Wt/Schedule:		Qualified Thickness Range:		Wall:	*0.625"*
		Actual Thickness:		Qualified Diameter Range:		Qualified Thickness Range:	*All Thickness*
						Qualified Diameter Range:	*1"Ø minimum*

Filler:	**1st Process**		**2nd Process**	
	Specification: *SFA 5.18*	Class: *ER 70S-2*	Specification:	Class:
	Diameter(s): *1/16Ø,3/32Ø, 1/8Ø*		Diameter(s):	
	F #: *6*	A#: *1*	F #:	
	Deposit Thickness: *0.625"*	Range Qualification: *All Thickness*	Deposit Thickness:	Range Qualification:

Welding Position: *6G*	If Vertical: *Upward*				
Gas (Type & Composition:	Shielding: *Argon 99.99%*		Root Side Backing	*Argon 99.99%*	
Electrical Characteristics	Type Current	~~AC~~	~~DCEP~~	*DCEN*	
	~~Transfer GMAW~~	~~Spray~~	~~Globular~~	~~Pulse~~	~~Short Circuit~~

For Information Only		**Machine Welding**		
Filler Metal Trade Name:		Control:	☐ Visual	☐ Remote Visual
SAW Flux Trade Name:		Arc Voltage Control:	☐ Auto	☐ Other:
Shielding Gas Trade Name:		Joint Tracking:	☐ Yes	☐ No

Visual Inspection					
Appearance:	*Satisfactory*	Undercut:	*None Visible*	Piping Porosity:	*None Visible*

Guided Bend Test					
Type and Figure	Results	Type and Figure	Results	Type and Figure	Results
Test Conducted by:			Lab Test #:		Date:

Radiographic Test			
Results: Satisfactory		Per ASME IX-2007 and AWS D1.1-06	
Radiographer: Alloyweld Inspection Co., Inc.	Examiner: Jennifer Anaya-Level II	Register #: *6760*	Date: *8/20/2010*

Fillet Weld Test Results			
Fracture Test: (Location, Nature, and size of Crack or Tear in Specimen)			
Length of Weld:	Length of Defect:	Percent of Defect	
Macro Test: Fusion			
Appearance: Fillet Size	inch X	inch	☐ Convex ☐ Concave
Test Conducted by:		Lab Test #:	

We certify that the statements in this record are correct and that the test welds were prepared, welded, and tested in accordance with the requirements of **ASME IX-2007 & AWS D1.1-06** ***Fermi National Accelerator Laboratory***

By: Roger E Heller 003620	Date: *9/01/2010*

Fermilab

Fermi National Accelerator Laboratory

Technical Division-Machine Shop

Welder Performance Qualification Record

Welder's Name	*Ryan Mahoney*			**FNAL #**	*15470N*	**ASME #**	*W-2*
Welding Process:	**1st**	*GTAW*	Type	*Manual*	**2nd**		Type
Performed in accordance with:	*Fermi WPS SS-3,R4*						

Joint:	~~Fillet:~~		~~Production Weld~~	*Test Coupon*		
Groove:	~~Double Welded:~~	~~Yes~~	No			
	Single Welded:	~~Metal Fused~~	~~Metal Non-Fused~~	~~Non-Metal~~	*Open Root*	~~Consumable Insert~~
		~~With Solid Backing~~	*Without Solid Backing*			

Base Metal:	Specification:	*SA 312, Gr 304*	TO	*SA 312, Gr 304*	ASME P #8	TO	ASME P # 8

~~Plate~~	**Pipe**		~~Tube~~
Actual Thickness:	Nominal Diameter: 4	Actual Diameter: *4/5"*	Overall Diameter:
Qualified Range:	Wt/Schedule: *Sch. 80*	Qualified Thickness Range: *0-0.674*	Wall:
	Actual Thickness: *0.337*	Qualified Diameter Range: *2.875" minimum*	Qualified Thickness Range:
			Qualified Diameter Range:

Filler:	**1st Process**		**2nd Process**	
	Specification: *SFA 5.9*	Class: *ER 308/308L*	Specification:	Class:
	Diameter(s): *1/16"Ø, 3/32"Ø*		Diameter(s):	
	F #: *6*		F #:	
	Deposit Thickness: *0.0337*	Range Qualification: *0-0.674"*	Deposit Thickness:	Range Qualification:

Welding Position: *6G*	If Vertical: *Upward* ~~Down~~				
Gas (Type & Composition:	Shielding: *Argon 99.9%*		Root Side Backing	*Argon 99.9%*	
Electrical Characteristics	Type Current	~~AC~~	~~DCEP~~	*DCEN*	
	Transfer GMAW	~~Spray~~	~~Globular~~	~~Pulse~~	~~Short Circuit~~

For Information Only		**Machine Welding**		
Filler Metal Trade Name:		Control:	❑ Visual	❑ Remote Visual
SAW Flux Trade Name:		Arc Voltage Control:	❑ Auto	❑ Other:
Shielding Gas Trade Name:		Joint Tracking:	❑ Yes	❑ No

Visual Inspection					
Appearance:	*Satisfactory*	Undercut:		Piping Porosity:	

Guided Bend Test					
Type and Figure	Results	Type and Figure	Results	Type and Figure	Results
Test Conducted by:			Lab Test #:		Date:

Radiographic Test			
Results: Satisfactory		Per ASME IX-2007 and AWS D1.1-06	
Radiographer: *Alloyweld Inspection Co., Inc.*	Examiner: *Jennifer Anaya-Level II*	*Register # 5615*	Date: *6/18/2010*

Fillet Weld Test Results			
Fracture Test:(Location, Nature, and size of Crack or Tear in Specimen)			
Length of Weld:	Length of Defect:	Percent of Defect	
Macro Test: Fusion			
Appearance: Fillet Size	inch X	inch	❑ Convex ❑ Concave
Test Conducted by:		Lab Test #:	

We certify that the statements in this record are correct and that the test welds were prepared, welded, and tested in accordance with the requirements of **ASME IX-2007** ***Fermi National Accelerator Laboratory***

By:	Date:
Roger E Miller	6/18/2010

Fermilab

Fermi National Accelerator Laboratory

Technical Division-Machine Shop

Welder Performance Qualification Record

Welder's Name	*Ryan Mahoney*			**FNAL #**	*15470N*	**ASME #**	*W-2*
Welding Process:	**1st**	*GTAW*	Type	*Manual*	**2nd**		Type
Performed in accordance with:	*Fermi WPS-SS-8-001*						

Joint:	~~Fillet:~~		~~Production Weld~~	*Test Coupon*		
Groove:	~~Double Welded:~~	~~Yes~~	*No*			
	Single Welded:	~~Metal Fused~~	~~Metal Non Fused~~	~~Non Metal~~	*Open Root*	Consumable Insert
		~~With Solid Backing~~	*Without Solid Backing*			

Base Metal:	Specification:	*SA 213, Type 304/304L*	TO	*SA 213, Type 304/304L*	*ASME P #8, Gp 1*	TO	*ASME P # 8, Gp 1*
Plate	**Pipe**				**Tube**		
Actual Thickness:	Nominal Diameter:			Actual Diameter	Overall Diameter: *0.250"*		
Qualified Range:	Wt/Schedule:			Qualified Thickness Range	Wall: *0.035"*		
	Actual Thickness			Qualified Diameter Range: .	Qualified Thickness Range: *0.070" Maximum*		
					Qualified Diameter Range: *0.250" Minimum*		

Filler:	**1st Process**		**2nd Process**	
	Specification: *5.9*	Class: *308/308L*	Specification:	Class:
	Diameter(s): *.035, .045, 1/16*		Diameter(s):	
	F #: *6*		F #:	
	Deposit Thickness: *0.035*	Range Qualification: *0.070 Maximum*	Deposit Thickness:	Range Qualification:

Welding Position: *6G*	If Vertical: *Uphill* ~~Down~~				
Gas (Type & Composition:	Shielding: *Argon 99.9%*		Root Side Backing - *Argon 99.9%*		
Electrical Characteristics	Type Current	~~AC~~	~~DCEP~~	*DCEN*	
	~~Transfer GMAW~~	~~Spray~~	~~Globular~~	~~Pulse~~	~~Short Circuit~~

Visual Inspection					
Appearance:	*Satisfactory*	Undercut:	*None*	Piping Porosity:	*None*

Guided Bend Test					
Type and Figure	Results	Type and Figure	Results	Type and Figure	Results
Test Conducted by:			Lab Test #:		Date:

Radiographic Test			
Results: *Satisfactory*		Per ASME IX-2007	
Radiographer: *Alloyweld Inspection Co., Inc.*	Examiner: *Jennifer Anaya-Level II*	Register # *5615*	Date: *6/18/2010*

Fillet Weld Test Results				
Fracture Test: (Location, Nature, and size of Crack or Tear in Specimen)				
Length of Weld:	Length of Defect:	Percent of Defect		
Macro Test: Fusion				
Appearance: Fillet Size	inch X	inch	❑ Convex	❑ Concave
Test Conducted by:		Lab Test #:		

Test Verified by: *Roger Hiller, 00362N*	Verification Report #*5112010-2RH*	
		Signature

We certify that the statements in this record are correct and that the test welds were prepared, welded, and tested in accordance with the requirements of **ASME IX-2007 & AWS D1.1-06** ***Fermi National Accelerator Laboratory***

By: Roger Hiller 00362N	Date: *6/18/2010*

Authorized Representative

Fermilab

Fermi National Accelerator Laboratory

Technical Division-Machine Shop

Welder Performance Qualification Record

Welder's Name	*Ryan Mahoney*			**FNAL #**	*15470N*	**ASME #**	*W-2*
Welding Process:	**1st**	*GTAW*	Type	*Manual*	**2nd**		Type
Performed in accordance with:	*Fermi WPS-SS-9-002*						

Joint:	~~Fillet:~~		~~Production Weld~~	*Test Coupon*		
Groove:	Double Welded:	~~Yes~~	*No*			
	Single Welded	~~Metal Fused~~	~~Metal Non-Fused~~	~~Non-Metal~~	*Open Root*	Consumable Insert
		~~With Solid Backing~~	*Without Solid Backing*			

Base Metal:	Specification:	*SA 213, Type 304/304L*	TO	*SA 213, Type 304/304L*	*ASME P #8, Gp 1*	TO *ASME P # 8, Gp 1*
Plate	**Pipe**				**Tube**	
Actual Thickness:	Nominal Diameter:		Actual Diameter		Overall Diameter: *0.500"*	
Qualified Range:	Wt/Schedule:		Qualified Thickness Range		Wall: *0.095"*	
	Actual Thickness		Qualified Diameter Range		Qualified Thickness Range: *0.190" Maximum*	
					Qualified Diameter Range: *0.500" Minimum*	

Filler:	**1st Process**		**2nd Process**	
	Specification: *5.9*	Class: *308/308L*	Specification:	Class:
	Diameter(s): *.045, 1/16 , 3/32*		Diameter(s):	
	F #: *6*		F #:	
	Deposit Thickness: *0.095*	Range Qualification: *0.190 Maximum*	Deposit Thickness:	Range Qualification:

Welding Position: *6G*	If Vertical: *Uphill* ~~Down~~				
Gas (Type & Composition:	Shielding: *Argon 99.9%*		Root Side Backing - *Argon 99.9%*		
Electrical Characteristics	Type Current	~~AC~~	~~DCEP~~	*DCEN*	
	~~Transfer GMAW~~	~~Spray~~	~~Globular~~	~~Pulse~~	~~Short Circuit~~

Visual Inspection					
Appearance:	*Satisfactory*	Undercut:	*None*	Piping Porosity:	*None*

Guided Bend Test					
Type and Figure	Results	Type and Figure	Results	Type and Figure	Results
Test Conducted by:			Lab Test #:		Date:

Radiographic Test			
Results: *Satisfactory*		Per ASME IX-2007 and AWS D1.1-06	
Radiographer: *Alloyweld Inspection Co., Inc.*	Examiner: *Jennifer Anaya-Level II*	Register # 5615	Date: *6/18/2010*

Fillet Weld Test Results				
Fracture Test: (Location, Nature, and size of Crack or Tear in Specimen)				
Length of Weld:	Length of Defect:		Percent of Defect	
Macro Test: Fusion				
Appearance: Fillet Size	inch X	inch	☐ Convex	☐ Concave
Test Conducted by:		Lab Test #:		

Test Verified by: *Roger Hiller 00362N*	Verification Report #*5272010-2*	

Signature

We certify that the statements in this record are correct and that the test welds were prepared, welded, and tested in accordance with the requirements of **ASME IX-2007 & AWS D1.1-06** ***Fermi National Accelerator Laboratory***

By: Roger Hiller 00362N Roger E Hiller	Date: *6/18/2010*

Authorized Representative

7. Inspection Plan / Examiners Report

In accordance with ASME 31.3 code for process piping, in process weld inspection was performed on a minimum of 5% of all circumferential welds performed by each welder. The “in process weld inspection” forms are appended in the following pages.

PPD Mechanical
In-Process Weld Inspection Form

(as per In-Process Weld Inspection Guidelines, AD Cryogenics, Nov 3, 2006)

FNAL W-3

Date 12-7-10 **Project:** PIXELS UPGRADE CO2 COOLING
Pipe Section: A1 **Weld Number:** 6, 7, 8, 11, 12
Weld location: MAB
Welder: MIKE JEENINGA W-3 **Inspector:** OTTO ALVAREZ

WELDS
ITEM 6 TO 7
ITEM 7 TO 8
ITEM 12 TO 11

Before Welding:

Type of weld: (butt) X (other) ____

(1) Pipe #1 Size, Schedule and material: 1 1/2" SCH 10S PIPE

(2) Pipe #2 Size, Schedule and material: 1 1/2" SCH 10S ELBOW

(1) Joint Preparation and Cleanliness

Joint Preparation and Cleanliness acceptable? YES

(2) Welding Machine

(a) Remote foot pedal? Yes

(b) DC straight machine? Yes

(3) Joint Fit-up, and Internal Alignment.

(a) Internal alignment acceptable? YES

(b) Joint Clearance acceptable? YES

(c) End Preparation acceptable? YES

(4) Filler Rod

(a) AWS A5.9 stainless steel filler rod? YES

(b) Filler rod: Class 308L Diameter .045" AND 1/16"

(5) Purge Gas.

(a) type of purge gas : ARGON

(b) time length of purge: AS NEEDED purge flow rate: 10 SCFH ____

(b) (if done) O2 reading: 0.7 O2 Monitor manf/model : CHECK-WELD

(6) Inspection After Root Pass

(a) No visible cracks. ✓

(b) No suck holes, which are small holes in middle of weld. ✓

(c) No porosity or obvious imperfections. ✓

(d) Filler material fused along edges of weld . ✓

(8) Repeat inspection after every pass: ✓

(9) Final Inspection: GOOD

PPD Mechanical
In-Process Weld Inspection Form

(as per In-Process Weld Inspection Guidelines, AD Cryogenics, Nov 3, 2006)

FNAL W-3

Date 12-17-10 **Project:** PIXELS UPGRADE CO2 COOLING
Pipe Section: A-10 **Weld Number:** 4, 5, 6, 7, 11, 12, 13, 14
Weld location: MAB
Welder: MIKE JEENIAGA W-3 **Inspector:** CHONLYDPEZ

WELD'S
ITEM 4 TO 5
5 TO 6
6 TO 7
11 TO 12
12 TO 13
13 TO 14

Before Welding:

Type of weld: (butt) X (other) _____
(1) Pipe #1 Size, Schedule and material: 1" SCH 10S
(2) Pipe #2 Size, Schedule and material: 1½" SCH 10S

(1) Joint Preparation and Cleanliness
Joint Preparation and Cleanliness acceptable? YES

(2) Welding Machine
(a) Remote foot pedal? YES
(b) DC straight machine? YES

(3) Joint Fit-up, and Internal Alignment.
(a) Internal alignment acceptable? YES
(b) Joint Clearance acceptable? YES
(c) End Preparation acceptable? YES

(4) Filler Rod
(a) AWS A5.9 stainless steel filler rod? YES
(b) Filler rod: Class 308L Diameter .045" + 1/16"

(5) Purge Gas.
(a) type of purge gas : ARGON
(b) time length of purge: AS NEEDED purge flow rate: 10 SCFH
(b) (if done) O2 reading: .07 O2 Monitor manf/model : CHECK-WELD

(6) Inspection After Root Pass
(a) No visible cracks. ✓
(b) No suck holes, which are small holes in middle of weld. ✓
(c) No porosity or obvious imperfections. ✓
(d) Filler material fused along edges of weld . ✓

(8) Repeat inspection after every pass: ✓

(9) Final Inspection: GOOD

PPD Mechanical
In-Process Weld Inspection Form

(as per In-Process Weld Inspection Guidelines, AD Cryogenics, Nov 3, 2006)

FNAL W-3

Date 12-14-10 **Project:** PIXELS UPGRADE CO2 COOLING LINES
Pipe Section: A7 **Weld Number:** 22, 23, 20, 21, 18, 19
Weld location: MAB
Welder: MIKE JEENINGA W-3 **Inspector:** OTO DLVADEZ

ITEM 18 TO 19
20 TO 21
22 TO 23

Before Welding:

Type of weld: (butt) X (other) _____

(1) Pipe #1 Size, Schedule and material: 1 1/2" SCH 10S

(2) Pipe #2 Size, Schedule and material: 1 1/2" SCH 10S

(1) Joint Preparation and Cleanliness

Joint Preparation and Cleanliness acceptable? YES

(2) Welding Machine

(a) Remote foot pedal? YES

(b) DC straight machine? YES

(3) Joint Fit-up, and Internal Alignment.

(a) Internal alignment acceptable? YES

(b) Joint Clearance acceptable? YES

(c) End Preparation acceptable? YES

(4) Filler Rod

(a) AWS A5.9 stainless steel filler rod? YES

(b) Filler rod: Class 308L Diameter .045" + 1/16"

(5) Purge Gas.

(a) type of purge gas : ARGON

(b) time length of purge: AS NEEDED purge flow rate: 10 SCFH

(b) (if done) O2 reading: .06 O2 Monitor manf/model : CHECK-WE 20

(6) Inspection After Root Pass

(a) No visible cracks. ✓

(b) No suck holes, which are small holes in middle of weld. ✓

(c) No porosity or obvious imperfections. ✓

(d) Filler material fused along edges of weld . ✓

(8) Repeat inspection after every pass: YES

(9) Final Inspection: GOOD

PPD Mechanical
In-Process Weld Inspection Form

(as per In-Process Weld Inspection Guidelines, AD Cryogenics, Nov 3, 2006)

FNAL W-3

Date 12-13-10 **Project:** PIXELS UPGRADE CO^2 COOLING
Pipe Section: A7 **Weld Number:** 2,3,6,7,8
Weld location: MAB
Welder: MIKE JEENINGA W-3 **Inspector:** OTTO ALVAREZ

WELDS ITEM 2 TO 3, 6 TO 7, 7 TO 8

Before Welding:

Type of weld: (butt) X (other) _____

(1) Pipe #1 Size, Schedule and material: 1" SCH 10S

(2) Pipe #2 Size, Schedule and material: 1" SCH 10S

(1) Joint Preparation and Cleanliness

Joint Preparation and Cleanliness acceptable? YES

(2) Welding Machine

(a) Remote foot pedal? YES

(b) DC straight machine? YES

(3) Joint Fit-up, and Internal Alignment.

(a) Internal alignment acceptable? YES

(b) Joint Clearance acceptable? YES

(c) End Preparation acceptable? YES

(4) Filler Rod

(a) AWS A5.9 stainless steel filler rod? YES

(b) Filler rod: Class 308L Diameter .045" + 1/16"

(5) Purge Gas.

(a) type of purge gas : ARGON

(b) time length of purge: AS NEEDED purge flow rate: 10 SCFH

(b) (if done) O2 reading: .08 O2 Monitor manf/model : CHECK - WELD

(6) Inspection After Root Pass

(a) No visible cracks. ✓

(b) No suck holes, which are small holes in middle of weld. ✓

(c) No porosity or obvious imperfections. ✓

(d) Filler material fused along edges of weld . ✓

(8) Repeat inspection after every pass: ✓

(9) Final Inspection: GOOD

PPD Mechanical
In-Process Weld Inspection Form

(as per In-Process Weld Inspection Guidelines, AD Cryogenics, Nov 3, 2006)

FNAL W-3

Date 12-8-10 **Project:** PIXELS UPGRADE CO^2 COOLING
Pipe Section: A2 **Weld Number:** 8, 9, 10, 11
Weld location: MAB
Welder: MIKE JEENINGA W-3 **Inspector:** OTTO ALVAREZ

WELDS ITEM (8) TO (9), (9) TO (10), (10) TO (11)

Before Welding:

Type of weld: (butt) X (other) ____

(1) Pipe #1 Size, Schedule and material: 1 1/2" SCH 10S PIPE

(2) Pipe #2 Size, Schedule and material: 1 1/2" SCH 10S ELBOW + TEE

(1) Joint Preparation and Cleanliness

Joint Preparation and Cleanliness acceptable? YES

(2) Welding Machine

(a) Remote foot pedal? YES

(b) DC straight machine? YES

(3) Joint Fit-up, and Internal Alignment.

(a) Internal alignment acceptable? YES

(b) Joint Clearance acceptable? YES

(c) End Preparation acceptable? YES

(4) Filler Rod

(a) AWS A5.9 stainless steel filler rod? YES

(b) Filler rod: Class 308L Diameter .045" + 1/16"

(5) Purge Gas.

(a) type of purge gas : ARGON

(b) time length of purge: AS NEEDED purge flow rate: 10 SCFH

(b) (if done) O2 reading: .08 O2 Monitor manf/model : CHECK-WELD

(6) Inspection After Root Pass

(a) No visible cracks. ✓

(b) No suck holes, which are small holes in middle of weld. ✓

(c) No porosity or obvious imperfections. ✓

(d) Filler material fused along edges of weld . ✓

(8) Repeat inspection after every pass: ✓

(9) Final Inspection: GOOD

CMS CO_2 Test Stand
In-Process Weld Inspection Form

(as per In-Process Weld Inspection Guidelines, NML Cryogenic System, 9/29/06)

Date: 2/9/11 Project: CMS CO_2 Test Stand

Pipe Section: A3 Weld Number: A3-13 to A3-14

Weld Location:

Welder: Mike Cooper Inspector: Abraham Diaz

Before Welding:

Type of weld: (butt) ✓ (other) ____

(1) Pipe #1 Size, Schedule and Material: Stainless / 1"

(2) Pipe #2 Size, Schedule and Material: Stainless / 1"

(1) Joint Preparation and Cleanliness

Joint Preparation and Cleanliness acceptable? Yes

(2) Welding Machine

(a) Remote foot pedal? ✓

(b) DC straight machine? ____

(3) Joint Fit-up, and Internal Alignment

(a) Internal alignment acceptable? Yes

(b) Joint clearance acceptable? Yes

(c) End preparation acceptable? Yes

(4) Filler Rod

(a) AWS A5.9 stainless steel filler rod? ✓

(b) Filler rod: Class 308L Diameter 1/16"

(5) Purge Gas

(a) type of purge gas: Argon

(b) time length of purge: 2min purge flow rate: 10 PSI

(6) Inspection After Root Pass

(a) No visible cracks. NO

(b) No suck holes, which are small holes in middle of weld. NO

(c) No porosity or obvious imperfections: NO

(d) Filler material fused along edges of weld. ✓

(7) Repeat inspection after every pass: yes

(8) Final Inspection: [signature]

CMS CO_2 Test Stand
In-Process Weld Inspection Form

(as per In-Process Weld Inspection Guidelines, NML Cryogenic System, 9/29/06)

Date: 2/22/11 Project: CMS CO_2 Test Stand

Pipe Section: A3 Weld Number: ~~#4 – #10~~ #8 to 9, #9 to #10, #10 to #11

Weld Location: LAB F / Lab C

Welder: Mike Cooper Inspector: [signature]

Before Welding:

Type of weld: (butt) ✓ (other) ____

(1) Pipe #1 Size, Schedule and Material: 7" Schedule 10

(2) Pipe #2 Size, Schedule and Material: 7" Schedule 10 Elbow

(1) Joint Preparation and Cleanliness

Joint Preparation and Cleanliness acceptable? yes

(2) Welding Machine

(a) Remote foot pedal? Yes

(b) DC straight machine? Yes

(3) Joint Fit-up, and Internal Alignment

(a) Internal alignment acceptable? yes

(b) Joint clearance acceptable? yes

(c) End preparation acceptable? yes

(4) Filler Rod

(a) AWS A5.9 stainless steel filler rod? yes

(b) Filler rod: Class 308 L Diameter 1/16"

(5) Purge Gas

(a) type of purge gas: Argon

(b) time length of purge: 2 min purge flow rate: 20 psig

(6) Inspection After Root Pass

(a) No visible cracks. NO

(b) No suck holes, which are small holes in middle of weld. NO

(c) No porosity or obvious imperfections: NO

(d) Filler material fused along edges of weld. ✓

(7) Repeat inspection after every pass: yes

(8) Final Inspection: [signature]

CMS CO_2 Test Stand
In-Process Weld Inspection Form

(as per In-Process Weld Inspection Guidelines, NML Cryogenic System, 9/29/06)

Date: 2/22/11 Project: CMS CO_2 Test Stand

Pipe Section: A-6 Weld Number: Items #5 to #6 #6 to #7

Weld Location: LAB F/LABC

Welder: Mike Cooper Inspector: Abraham Diaz

Before Welding:

Type of weld: (butt) ✓ (other) ____

(1) Pipe #1 Size, Schedule and Material: 1" schedule 10

(2) Pipe #2 Size, Schedule and Material: 1" Schedule 10 Elbow

(1) Joint Preparation and Cleanliness

Joint Preparation and Cleanliness acceptable? yes

(2) Welding Machine

(a) Remote foot pedal? yes

(b) DC straight machine? No

(3) Joint Fit-up, and Internal Alignment

(a) Internal alignment acceptable? yes

(b) Joint clearance acceptable? yes

(c) End preparation acceptable? yes

(4) Filler Rod

(a) AWS A5.9 stainless steel filler rod? yes

(b) Filler rod: Class 308 L Diameter 1/16"

(5) Purge Gas

(a) type of purge gas: Argon

(b) time length of purge: 2min purge flow rate: 20 psig

(6) Inspection After Root Pass

(a) No visible cracks. NO

(b) No suck holes, which are small holes in middle of weld. NO

(c) No porosity or obvious imperfections: NO

(d) Filler material fused along edges of weld. ✓

(7) Repeat inspection after every pass: yes

(8) Final Inspection: Abraham D

CMS CO_2 Test Stand
In-Process Weld Inspection Form

(as per In-Process Weld Inspection Guidelines, NML Cryogenic System, 9/29/06)

Date: 12-7-2011 Project: CMS CO_2 Test Stand

Pipe Section: Assm - 5 Weld Number: #10 to #9

Weld Location: PC 4

Welder: Ryan (W-2) Inspector: Erik Voirin

Before Welding:

Type of weld: (butt) X (other) ____

(1) Pipe #1 Size, Schedule and Material: schedule 10 1.5" 90° elbow

(2) Pipe #2 Size, Schedule and Material: schedule 10 1.5" to 1" reducer

(1) Joint Preparation and Cleanliness

Joint Preparation and Cleanliness acceptable? Yes

(2) Welding Machine

(a) Remote foot pedal? Yes

(b) DC straight machine? Yes

(3) Joint Fit-up, and Internal Alignment

(a) Internal alignment acceptable? Yes

(b) Joint clearance acceptable? Yes

(c) End preparation acceptable? Yes

(4) Filler Rod

(a) AWS A5.9 stainless steel filler rod? Yes

(b) Filler rod: Class 308L Diameter 1/16"

(5) Purge Gas

(a) type of purge gas: Ar

(b) time length of purge: 2 min purge flow rate: 10 scfh

(6) Inspection After Root Pass

(a) No visible cracks. NO

(b) No suck holes, which are small holes in middle of weld. NO

(c) No porosity or obvious imperfections: NO

(d) Filler material fused along edges of weld. ✓

(7) Repeat inspection after every pass: Yes

(8) Final Inspection: [signature]

CMS CO_2 Test Stand
In-Process Weld Inspection Form

(as per In-Process Weld Inspection Guidelines, NML Cryogenic System, 9/29/06)

Date: 12-7-2011 Project: CMS CO_2 Test Stand

Pipe Section: Assm-4 Weld Number: #10 to #11

Weld Location: PC4

Welder: Ryan (W-2) Inspector: Erik Voirin

Before Welding:

Type of weld: (butt) X (other) ____

(1) Pipe #1 Size, Schedule and Material: 1/2" shedule 10 45° elbow

(2) Pipe #2 Size, Schedule and Material: 1/2" schedule 10 90° elbow

(1) Joint Preparation and Cleanliness

Joint Preparation and Cleanliness acceptable? Yes

(2) Welding Machine

(a) Remote foot pedal? Yes

(b) DC straight machine? Yes

(3) Joint Fit-up, and Internal Alignment

(a) Internal alignment acceptable? Yes

(b) Joint clearance acceptable? Yes

(c) End preparation acceptable? Yes

(4) Filler Rod

(a) AWS A5.9 stainless steel filler rod? Yes

(b) Filler rod: Class 308L Diameter 1/16"

(5) Purge Gas

(a) type of purge gas: Ar

(b) time length of purge: 2 minutes purge flow rate: 10 scfh

(6) Inspection After Root Pass

(a) No visible cracks. NO

(b) No suck holes, which are small holes in middle of weld. NO

(c) No porosity or obvious imperfections: NO

(d) Filler material fused along edges of weld. ✓

(7) Repeat inspection after every pass: Yes

(8) Final Inspection: [signature]

8. Component Identification

Process and Instrument diagram:

The process and instrument diagram is on drawing 9212.750-ME-466879, and also included on the following page. This diagram is followed by the valve and instrument list.

Piping components:

Drawings and lists of each piping run including all fittings and their pressure ratings are included following the valve and instrument list. Purchase requisition forms are included as well.

- The system contains 4 flex hoses rated to a minimum of 1200 psi. The purpose of these hoses is to allow the pump to vibrate more freely, and attached to unknown detector attachments. The braided hoses are two at 1.5" x 60" (to and from detector), one at 1.5 x 12" (pump inlet), and one at 1.5 x 16" (pump outlet). The hoses were purchased from Janco Process Control.
- The Valves used in the system are stainless steel valves rated to 1480 psi. The valves are Sharpe series 99 valves.
- Strainers are class 600 strainers manufactured by Keckley, they are rated for 1480 psi
- The check valves are cryogenic swing type check valves class 600 rated
- The manual control valve is a Triad valve rated to 2000 psi
- Flanges are class 600 rated
- Hart Unions are rated to 3000 psi

Descriptions / specifications follow the piping drawings.

Appendix B
Equipment Documentation

- Flex Hoses (Req Attached)
  - Pressure Flex hoses have a MAWP of 1200 psi, and a burst pressure of 4842 psi.
    - http://www.hosemaster.com/products/corrugatedmetalhoses/hose.php?id=7
  - Hydra Flex hoses have a MAWP of at least 1500 psi, and a burst pressure of at least 6000 psi.
    - http://www.hosemaster.com/products/corrugatedmetalhoses/hose.php?id=11

- Sharpe Valves (Req Attached)
  - The 99 series Sharpe Valves have a pressure rating of at least 1480 psi
    - http://www.sharpevalves.com/pdfs/series_99.pdf

- ½" Control Valve (Req Attached)
  - This Valve has a pressure rating of 2000 psi.
    - http://www.triadprocess.com/pdf/Triad66FD.pdf

- Strainers (Req Attached)
  - The Keckley Brand Strainers have a class rating of 600 (1480 psi)
    - http://www.keckley.com/pdf/downloads/Style%20SSB-7.pdf

- Check Valves (Req Attached)
  - The Velan Brand Check Valves are Class 600 rated (1480 psi)
    - http://www.velan.com/velan/en/products/16/31/?product_id=64

- Flanges (Req Attached)
  - Flanges are all ASME Class 600 rated (1480 psi)
    - Purchased from Janco Process Control
    - Orifice Flange purchased from Specialty Flange and Fitting

- Sight Glasses (Req Attached)
  - MetaGlass sight glasses are rated to 1450 psi per Distributor. This value is stated on purchase requisition as well.
    - Purchased from Chemray

- Instruments (Req Attached)
  - Fuji Differential Pressure Transmitters are rated for at least 1450 psi
    - http://www.instrumart.com/assets/108/FKCnew_datasheet.pdf
  - Setra SC207 Pressure Transmitters have a range of 0-3000 psig, which shows their MAWP is at least 3000 psi.

- Unions (Req Attached)
  - Unions are Rated at 3000 psi and were purchased from Hart Industries
    - http://www.hartindustries.com/images/HART%203333%20Union%20Technical%20Data%20Sheet_1.pdf

- Pipe (Req Attached)
  - Piping is all 304/304L Schedule 10 Stainless and which complies with ASTM Standards. Piping was purchased from RJ Keck.
    - Material mill reports are available.

- Studs and Nuts (Req Attached)
  - Grade A320 Grade B7 studs are used throughout the system. They comply with the temperature range and pressures involved. They were purchased from Fastenal.
    - Heavey Hex Nuts used with all studs.

- Gaskets (Req Attached)
  - High Quality Dual solid metal ring gaskets are used throughout the system. They were Purchased from Flexitallic

REV	DESCRIPTION	DRAWN	DATE
		APPROVED	DATE

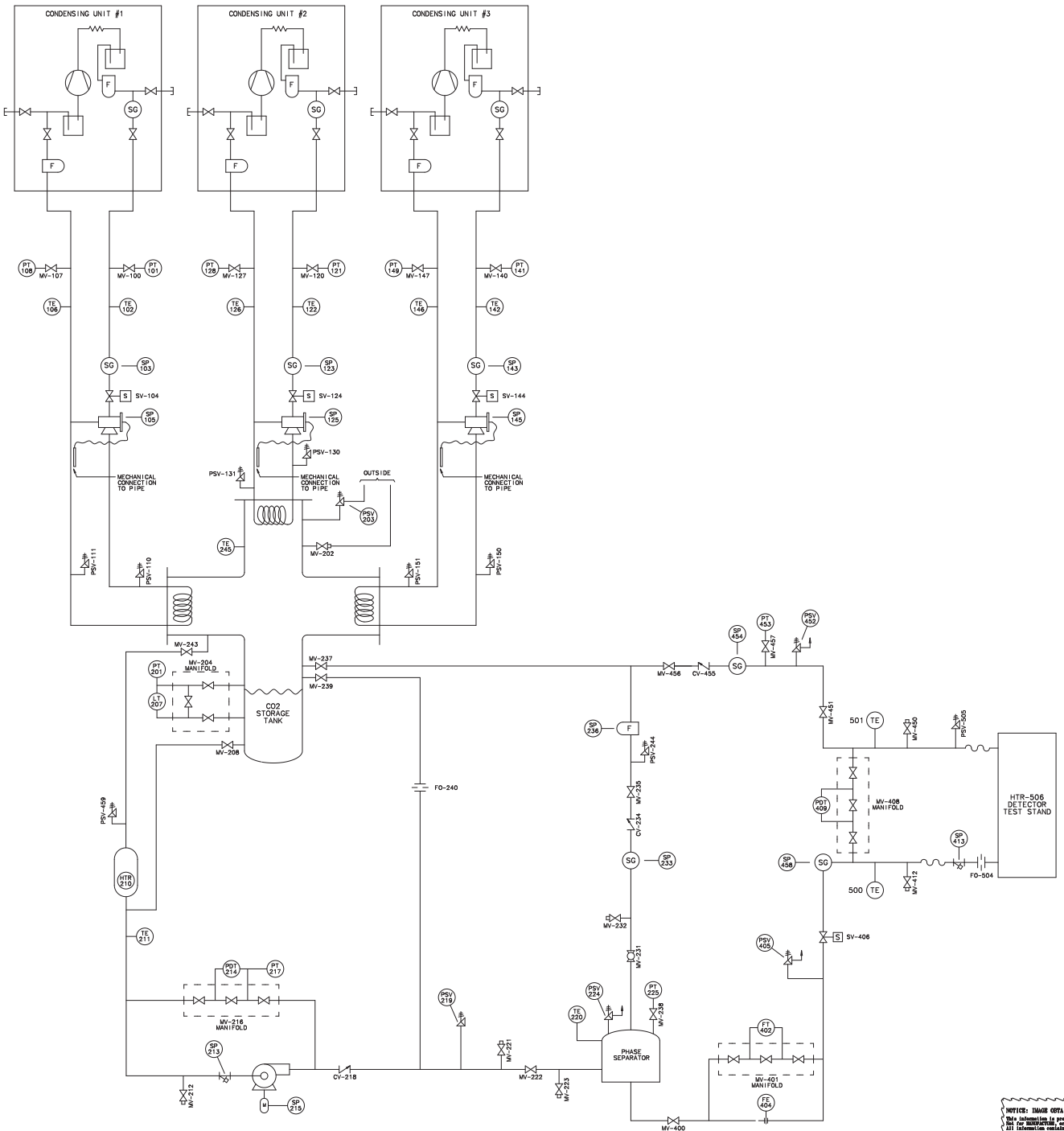

UNLESS OTHERWISE SPECIFIED	ORIGINATOR	M.ADAMOWSKI	04-FEB-2010
	DRAWN	J.CATALANELLO	09-FEB-2010
± ± ±	CHECKED	E.VOIRIN	02-AUG-2010
1. BREAK ALL SHARP EDGES MAX	APPROVED	E.VOIRIN	02-AUG-2010
2. DO NOT SCALE DRAWING. 3. DIMENSIONS BASED UPON	USED ON		
4. MAX. ALL MACH. SURFACES √	MATERIAL		
5. DRAWING UNITS:			

FERMI NATIONAL ACCELERATOR LABORATORY
UNITED STATES DEPARTMENT OF ENERGY

CMS/DETECTORS
PIXEL
CMS CO2 COOLING P&ID

SCALE	DRAWING NUMBER	SHEET	REV
NONE	9212.750-ME-466879	1 OF 1	

CREATED WITH : Ideas12NXSeries GROUP: PPD/MECHANICAL DEPARTMENT

NOTICE: IMAGE OBTAINED FROM FERMILAB WEB SITE
This information is provided for REFERENCE use only. Not for MANUFACTURE or BUILD INFORMATION.
All information contained in this document represents work sponsored by an agency of the U.S. Government. Neither the U.S. Government nor any agency thereof, nor Universities Research Association, Inc., nor any of their employees or officers, makes any warranty, express or implied, or assumes any legal liability or responsibility for the accuracy, completeness, or usefulness of any information, apparatus, product or process disclosed, or represents that its use would not infringe privately owned rights.

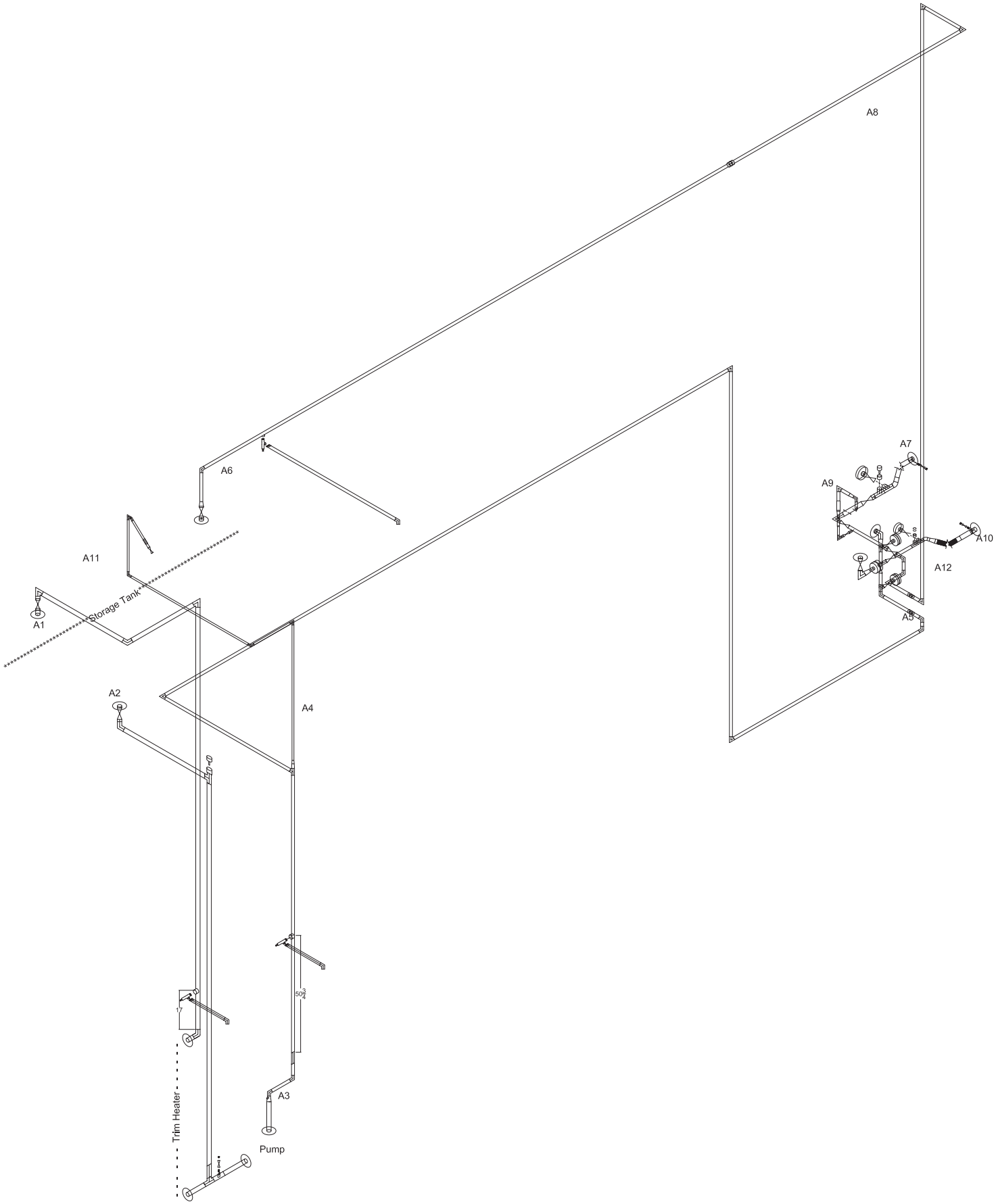
A8
A7
A6
A9
A10
A11
A12
Storage Tank
A1
A5
A2
A4
17
50 3/4
A3
Trim Heater
Pump

Assembly 1						
Pipe size	Piece#	Description	Length shown	end 1	end 2	MAWP (psi)
1.5	1	600# flange	0.875"			1480
1.5	2	Pipe	1.88	SW-flange	SW- valve	2000
1.5	3	Valve	5			1480
1.5	4	Pipe	1	SW- valve	Butt-elbow	2000
1.5	5	elbow	r=2.25	Butt-Pipe	Butt-Pipe	2000
1.5	6	Pipe	40.44	Butt-elbow	Butt-elbow	2000
1.5	7	elbow	r=2.25	Butt-Pipe	Butt-Pipe	2000
1.5	8	Pipe	30.85	Butt-elbow	Butt-elbow	2000
1.5	9	elbow	r=2.25	Butt-Pipe	Butt-Pipe	2000
1.5	10	Pipe	183.35	Butt-elbow	Butt-elbow	2000
1	10.1	Saddle fitting				3000
1	10.2	relief valve				10000 psi burst
1	10.3	fitting	1			3000
1	10.4	Pipe	16	Butt Fitting	Butt elbow	3000
1	10.5	elbow	1.5	Butt-Pipe		3000
1.5	11	elbow	r=2.25	Butt-Pipe	Butt-Pipe	2000
1.5	12	Pipe	2.88	Butt-elbow	SW-flange	2000
1.5	13	600# flange	0.875"			1480

Assembly 2						
Pipe size	Piece#	Description	Length shown	end 1	end 2	MAWP (psi)
1.5	1	600# flange	0.875"			2000
1.5	2	Pipe	8.52	SW-flange	Butt-Tee	2000
1.5	3	Tee	r=2.25	Butt-Pipe	Butt-Pipe	2000
1.5	4	Pipe	5.19	Butt-Tee	Butt-Flex	2000
0.5	4.1	Pipe saddle 1/2"		FW to piece 4	.5" Threaded	3000
0.5	4.2	threaded nipple		4.1	4.3	3000
0.5	4.3	1/2" valve		4.2	4.4	1480
0.5	4.4	1/2" pipe plug		4.3		3000
0.25	4.5	Pipe saddle 1/4"		FW to piece 4	for PDT	3000
1.5	5	Flex Hose	12	Butt-Pipe		1500
1.5	6	Strainer	5.5 inches			1480
1.5	7	Pipe	166.125	Butt-Tee	Butt-Pipe	2000
1.5	8	Tee	r=2.25	Butt-Pipe	Butt-Pipe	2000
1.5	8.1	SW coupling		SW Tee	Thermowell	3000
1.5	8.2	thermowell	TW30-1-1/2-L4-SS316			20000
1.5	9	Pipe	40.44	Butt-elbow	Butt-elbow	2000
1.5	10	elbow	r=2.25	Butt-Pipe	Butt-Pipe	2000
1.5	11	Pipe	1	Butt-elbow	SW- valve	2000
1.5	12	Valve	5			1480
1.5	13	Pipe	0.9	SW- valve	SW-flange	2000
1.5	14	600# flange	0.875"			1480

Assembly 3 - out of pump						
Pipe size	Piece#	Description	Length shown	end 1	end 2	MAWP (psi)
1.5 to 1	1	Flex Hose	16 - 5/16	Butt-Elbow		1500
	1.1	Pipe saddle 1/4"		Piece 1 reducer	tp PDT	3000
1	2	elbow	r=1.5	Butt-Pipe	Butt-Pipe	3000
1	3	Pipe	9.06	Butt-elbow	Butt-elbow	3000
1	4	elbow	r=1.5	Butt-Pipe	Butt-Pipe	3000
1	5	Pipe	5	Butt-elbow	SW strainer	3000
1	6	check valve	5			1480
1	7	Pipe	120.29	SW strainer	Butt-Tee	3000
	7.1	Pipe saddle 1"	~57" from CV	Piece 7	Relief valve	3000
1	7.2	relief valve				10000 psi burst
1	7.3	fitting	1			3000
1	7.4	Pipe	16	Butt Fitting	Butt elbow	3000
1	7.5	elbow	1.5	Butt-Pipe	Outside	3000
1	8	Tee	r=1.5	Butt-Pipe	Butt-Pipe	3000
1	9	Pipe	62.54	Butt-Tee	Butt-elbow	3000
1	10	elbow	r=1.5	Butt-Pipe	Butt-Pipe	3000
1	11	Pipe	282.16 (two pieces)	Butt-elbow	Butt-Pipe	3000
1	11.1	Pipe		Butt-Pipe	Butt-elbow	3000
1	12	elbow	r=1.5	Butt-Pipe	Butt-Pipe	3000
1	13	Pipe	158.55	Butt-elbow	Butt-elbow	3000
1	14	elbow	r=1.5	Butt-Pipe	Butt-Pipe	3000
1	15	Pipe	92.88	Butt-elbow	Butt-elbow	3000
1	16	elbow	r=1.5	Butt-Pipe	Butt-Pipe	3000
1	17	Pipe	1.68	Butt-elbow	Butt-elbow	3000
1	18	elbow	r=1.5	Butt-Pipe	Butt-Pipe	3000
1	19	Pipe	3	Butt-elbow	SW Union	3000
1	20 TE	Union TE	2.25/2	Piece 19	(to Assm 5)	3000

Assembly 4 - out of Pump Pipe back to vessel dead head line						
Pipe size	Piece#	Description	Length shown	end 1	end 2	MAWP (psi)
1 to .75	1	reducer	2	Butt T (Assm3)	Butt-reducer	3000
.75 to .5	2	reducer	1.5	Butt-reducer	Butt-Pipe	3000
0.5	3	Pipe	58.75	Butt-reducer	Butt-elbow	3000
0.5	4	elbow	r = 1.5	Butt-Pipe	Butt-Pipe	3000
0.5	5	Pipe	18.09	Butt-elbow	Butt-elbow	3000
0.5	6	elbow	r = 1.5	Butt-Pipe	Butt-Pipe	3000
0.5	7	Pipe	58.57	Butt-elbow	Butt-elbow	3000
0.5	8	elbow	r = 1.5	Butt-Pipe	Butt-Pipe	3000
0.5	9	Pipe	22.5	Butt-elbow	Butt-elbow	3000
0.5	10	elbow	r = 1.5	Butt-Pipe	Butt-elbow	3000
0.5	11	45 degree elbow	r = 1.5	Butt-elbow	Butt-Pipe	3000
0.5	12	Pipe	10	Butt-elbow	SW Union	3000
0.5	13	hart union	2			3000
0.5	14	Thrd Pipe (cut in 1/2) 2.5		SW union	Valve	3000
0.5	15	1/2" valve	2.78	Thrd Pipe	reduc nipple	1480
.5 to .75	16	reducing nipple	0.25	valve	vessel port 1	6600

Assembly 5 - into cleanroom						
Pipe size	Piece#	Description	Length shown	end 1	end 2	MAWP (psi)
1	1	Union NUT END	2.25/2	(to Assm 3)	piece 2	3000
1	2	Pipe	12.55			3000
1	3	elbow		Butt-Pipe	Butt-Tee	3000
1	4	Tee		Butt-Elbow	Butt-Pipe	3000
1	4.1	1" Valve	4.22			1480
1	4.2	Pipe	1			3000
1	4.3	Flange				1480
1	4.4	Blind Flange				1480
1	5	Pipe	5.015	Butt-Tee	SW-Valve	3000
1	6	Valve	4.22			1480
1	7	Pipe	5.015	SW-Valve	Butt-Tee	3000
1	8	Tee	r=1.5	Butt-Pipe	Butt-Pipe	3000
1	8.1	1" Valve	4.22			1480
1	8.2	Pipe	1			3000
1	8.3	Flange				1480
1	8.4	Blind Flange				1480
1 to 1.5	9	reducer to 1.5	L=2.5	Butt-Tee	Butt-elbow	2000
1.5	10	elbow	r=2.25	Butt-Reducer	Butt-Pipe	2000
1.5	11	Pipe	0.4	Butt-elbow	SW-flange	2000
1.5	12	600# flange	0.875"+.25"			1480

Assembly 6 - return line 1						
Pipe size	Piece#	Description	Length shown	end 1	end 2	MAWP (psi)
1.5	1	flange	1.125	Vessel		1480
1.5	2	Pipe	1	SW flange	SW valve	2000
5	3	valve	5			1480
1.5 to 1	4	reducer	2.5	SW Valve	Butt-Pipe	2000
1	5	Pipe	12.625	Butt-Reducer	Butt-elbow	3000
1	6	elbow	1.5			3000
1	7	Pipe	263	Butt-elbow	SW Union	3000
1 to 3/4	7.1	saddle ftng (3/4)			relief Valve	3000
.75	7.2	relief valve				2000
1	7.3	fitting	1			3000
1	7.4	Pipe	63	Butt Fitting	Butt elbow	3000
1	7.5	elbow	1.5	Butt-Pipe	Outside	3000
1	8	SW union Thrd End			(Assm 8)	3000

Assembly 7 - return line in cleanroom						
Pipe size	Piece#	Description	Length shown	end 1	end 2	MAWP (psi)
1	1	Union NE	2.25/2	Piece 19	(to Assm 8)	3000
1	2	Pipe	8.82	SW union	Butt - elbow	3000
1	3	elbow	r = 1.5	Butt-Pipe	Butt-Pipe	3000
1	4	Pipe	4.81	Butt-elbow	Butt-elbow	3000
1	5	elbow	r = 1.5	Butt-Pipe	Butt-Pipe	3000
1	6	Pipe	3.6	Butt-elbow	Butt-elbow	3000
1	7	elbow	r = 1.5	Butt-Pipe	Butt-Reducer	3000
1 to 1.5	8	Reducer	2.5 - .5	Butt-elbow	SW-CV	2000
1.5	9	Check-Valve	5	reducer	reducer	1480
1.5 to 1	10	Reducer	2.5 - .5	SW-CV	Butt-Pipe	2000
1	11	Pipe	17.05	Butt-Reducer	SW-Valve	3000
.5"	11.1	saddle fitting		pipe 11	(to assm 9)	3000
1	12	1" Valve	4.22	pipe 11	pipe13	3000
1	13	Pipe	1	SW-Valve	Butt-elbow	1480
1	14	Elbow	r = 1.5 "	Butt-Pipe	Butt-Pipe	3000
1 to 1.5	15	reducer	2.5	Butt-elbow	Butt-Pipe	2000
1.5	16	Pipe	9.375	Butt - reducer	SW-Valve	2000
1.5"	16.1	saddle fitting	2" from reducer			3000
1.5"	16.11	sight glass				1450
1.5"	16.2	saddle fitting	2" from reducer			3000
1.5"	16.21	sight glass				1450
.5"	16.3	saddle fitting	4.75" from reducer			3000
0.5	16.31	nipple				3000
0.5	16.32	Valve				1480
.5 to .25	16.33	bushing				3000
0.25	16.34	Pressure Trans				3000
.5"	16.4	saddle fitting	7.25" from reducer		relief valve	3000
0.5	16.41	relief valve				10000 psi burst
1.5	17	Valve	5	pipe 16	Pipe 18	1480
1.5	18	Pipe	1.5	SW-Valve	Butt Tee	2000
.25"	18.1	saddle fitting				3000
1.5	19	Tee		Butt pipe 18	Butt Tee 20	3000
1.5	19.1	Coupling		Tee 20	Thermowell	3000

1.5	19.11	Thermowell				20000
1.5	20	Tee		Butt Tee 19	Valve (up)	3000
1.5	20.1	Valve		Tee 19	Pipe 19.2	1480
1.5	20.11	Pipe	1	SW valve	SW flange	3000
1.5	20.12	flange		end of pipe 19.2		1480
1.5	20.13	blind flange				1480
1.5	21	45 degree elbow		Butt Tee 20		2000
1.5	22	Flex Pipe		Butt elbow	Butt Pipe	1200 (4842 Burst)
1.5	23	Pipe	2	Butt Flex	SW Flange	2000
0.375	24	saddle fitting				3000
0.375	24.1	Nipple				3000
0.375	24.11	Valve				1480
0.375	24.12	plug				3000
1.5	25	Flange				1480

Assembly 8 - return line						
Pipe size	Piece#	Description	Length shown	end 1	end 2	MAWP (psi)
1	1	Union Nut End		(Assm 6)		3000
1	2	Pipe	113.87	Butt-pipe	Butt-elbow	3000
1	3	elbow		Butt-Pipe	Butt-Pipe	3000
1	4	Pipe	17.5	Butt-elbow	Butt-elbow	3000
1	5	elbow		Butt-Pipe	Butt-Pipe	3000
1	6	Pipe	256	Butt-elbow	Butt-elbow	3000
1	7	elbow		Butt-Pipe	Butt-Pipe	3000
1	8	Pipe	3	Butt-elbow	SW Union	3000
1	9	Union TE	2.25/2	Piece 19	(to Assm 7)	3000

Assembly 9 - Phase Separator Top outlet (P.S.)						
Pipe size	Piece#	Description	Length shown	end 1	end 2	MAWP (psi)
0.75	1	pipe nipple cut	3	threaded to P.S.	butt elbow	2000
0.75	2	pipe elbow	r = 1.5	Butt Pipe	Butt Pipe	3000
.75 to 1	3	reducer	2"	Butt-elbow	Butt Pipe	3000
1	4	Flex Pipe	12	Butt-Reducer	Butt-elbow	1500
1	4.1	elbow	1.5	Butt-Flex	Butt Pipe	3000
1	4.2	Pipe	4	Butt-elbow	Butt-elbow	3000
1	4.3	elbow	1.5	Butt Pipe	Butt Pipe	3000
1	4.4	Pipe	12	Butt-elbow	Butt-elbow	3000
1	5	elbow	r = 1.5	Butt Pipe	Butt Pipe	3000
1	6	Pipe	4	Butt-elbow	SW strainer	3000
1	6.1	saddle fitting	2" from elbow			3000
1	6.11	sight glass				1450
1	6.2	saddle fitting				3000
1	6.21	sight glass				1450
1	7	Strainer	4.5			1480
1 to .75	8	reducer	2	SW-Strainer	Butt Reducer	3000
.75 to .5	9	reducer	1.5	Butt Reducer		3000
0.5	10	Check Valve	3.75			1480
0.5	11	Pipe	3 - 7/16	SW-CV	Butt elbow	3000
0.5	12	elbow				3000
0.5	13	Pipe	1	Butt-elbow	SW CV	3000
0.5	14	Control Valve				2000
0.5	15	Pipe	3	SW CV	SW-(Assm 7)	3000

Assembly 10 - Phase Separator Bottom outlet (P.S.)						
Pipe size	Piece#	Description	Length shown	end 1	end 2	MAWP (psi)
1.5	1	flange	1.125			1480
1.5	2	Pipe	0.65	SW flange	SW valve	2000
1.5	3	Valve	5			1480
1.5	4	Pipe	0.25	SW Valve	Butt Elbow	2000
1.5	5	Elbow	r = 2.25	Butt Pipe	Butt Reducer	2000
1.5 to 1	6	reducer	2.5	Butt-elbow	Butt Pipe	2000
1	7	Pipe	2	Butt-Reducer	SW-flange	3000
1	8	Orifice Flanges	2.5			1480
1	9	Pipe	3.75	SW Flange	SW Valve	3000
1"	9.1	saddle fitting	SW-F end	Pipe 9	relief valve	3000
1	9.11	relief valve				10000 psi burst
1	10	Valve	4.22			1480
1	11	Pipe	8.5	SW valve	Butt-Tee	3000
1	11.1	saddle fitting				3000
1	11.11	sight glass				1450
1	11.2	saddle fitting				3000
1	11.21	sight glass				1450
1	11.4	saddle fitting			relief valve	3000
1	11.41	relief valve				10000 psi burst
0.25	11.3	saddle fitting			DPT	3000
1	12	Tee		Butt-Pipe 11	Butt-Tee	3000
1	12.1	Coupling				3000
1	12.11	Thermowell				20000
1	13	Tee		Butt Tee 12	Valve	3000
1	13.1	Valve				1480
1	13.2	Pipe	1	SW-Valve	SW flange	3000
1	13.3	Flange				1480
1	13.4	Blind Flange				3000
1	14	45 degree elbow				3000
1.5	15	flex pipe				1200 (4842 Burst)
1.5	16	strainer				1480
1.5	17	Pipe	2	SW-strainer	SW flange	2000
0.375	18	Saddle Fitting				3000
0.375	18.1	Nipple				3000
0.375	18.2	Valve				1480
0.375	18.3	Plug				3000
1.5	19	flange				1480

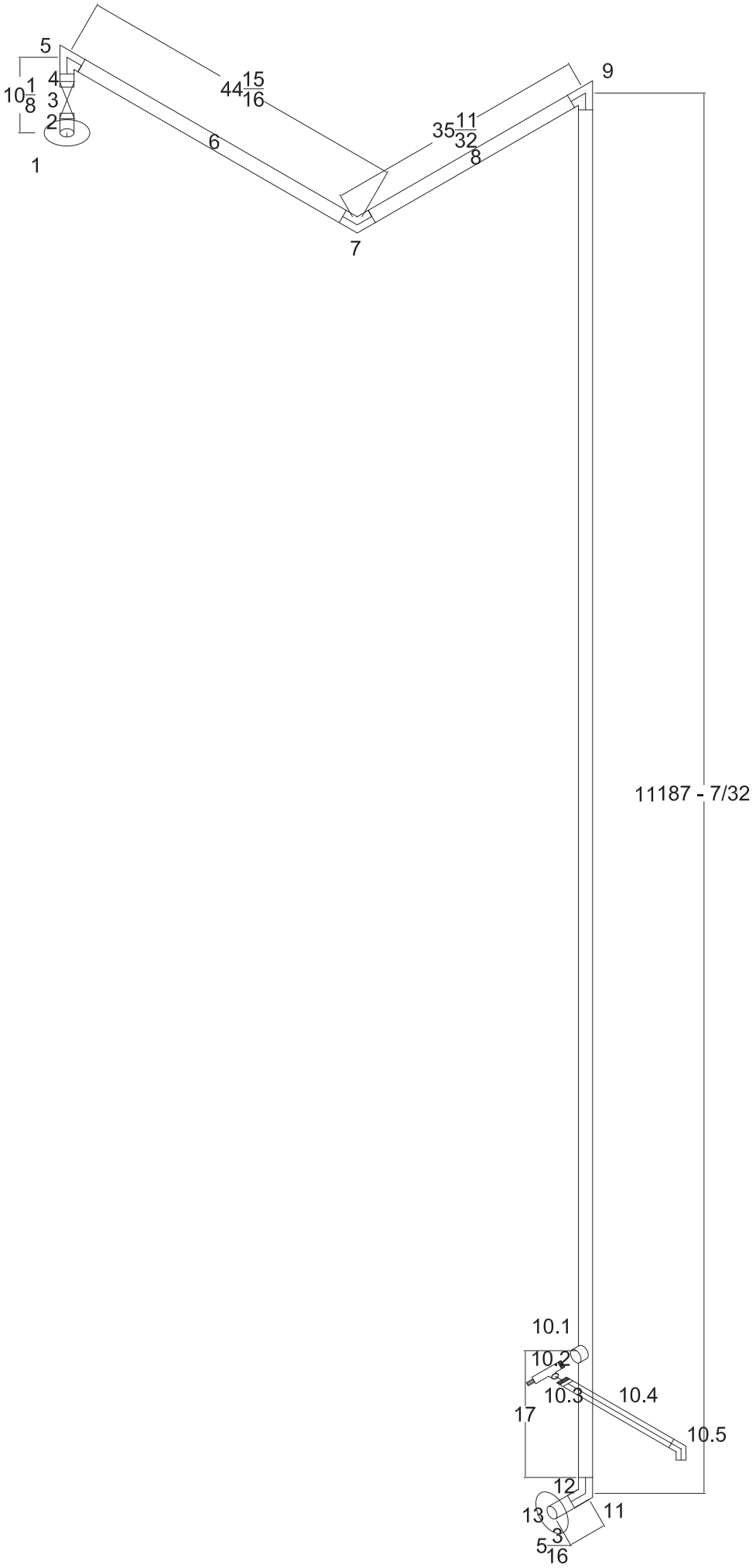
5
4
3
2
1
$10\frac{1}{8}$
$44\frac{15}{16}$
6
$35\frac{11}{32}$
8
9
7
11187 - 7/32
10.1
10.2
10.3
10.4
10.5
17
12
13
11
$5\frac{3}{16}$

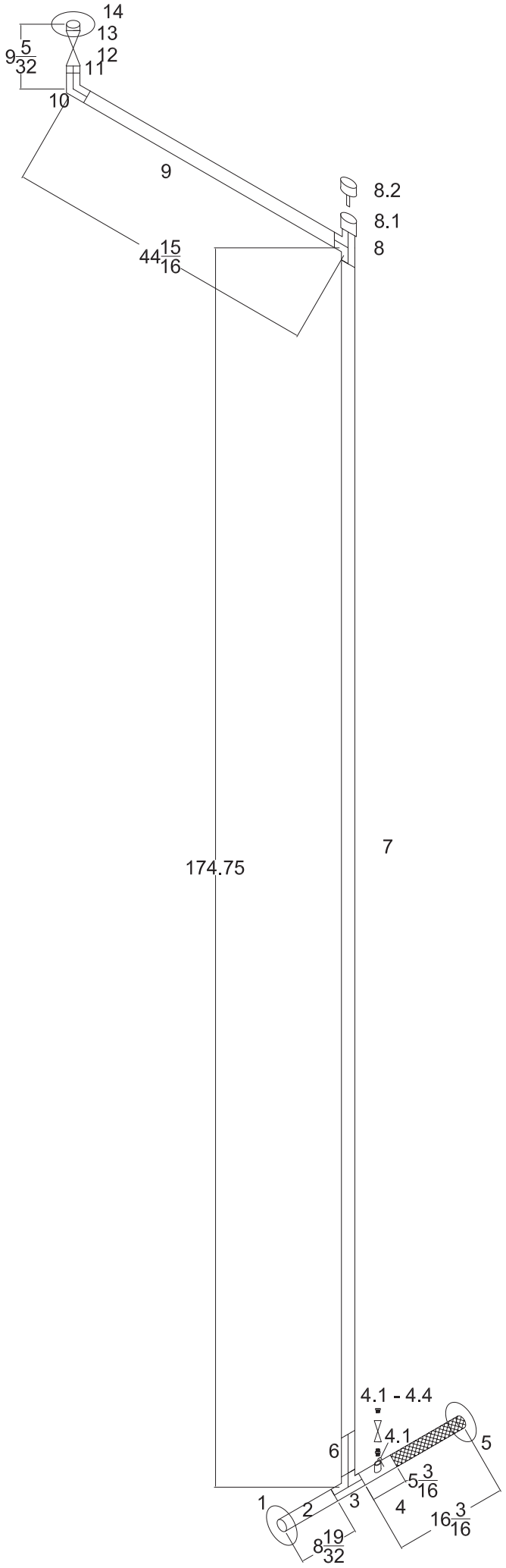
14
13
12
11
10
9 5/32
9
8.2
8.1
8
44 15/16
174.75
7
4.1 - 4.4
4.1
6
5
5 3/16
1
2
3
4
16 3/16
8 19/32

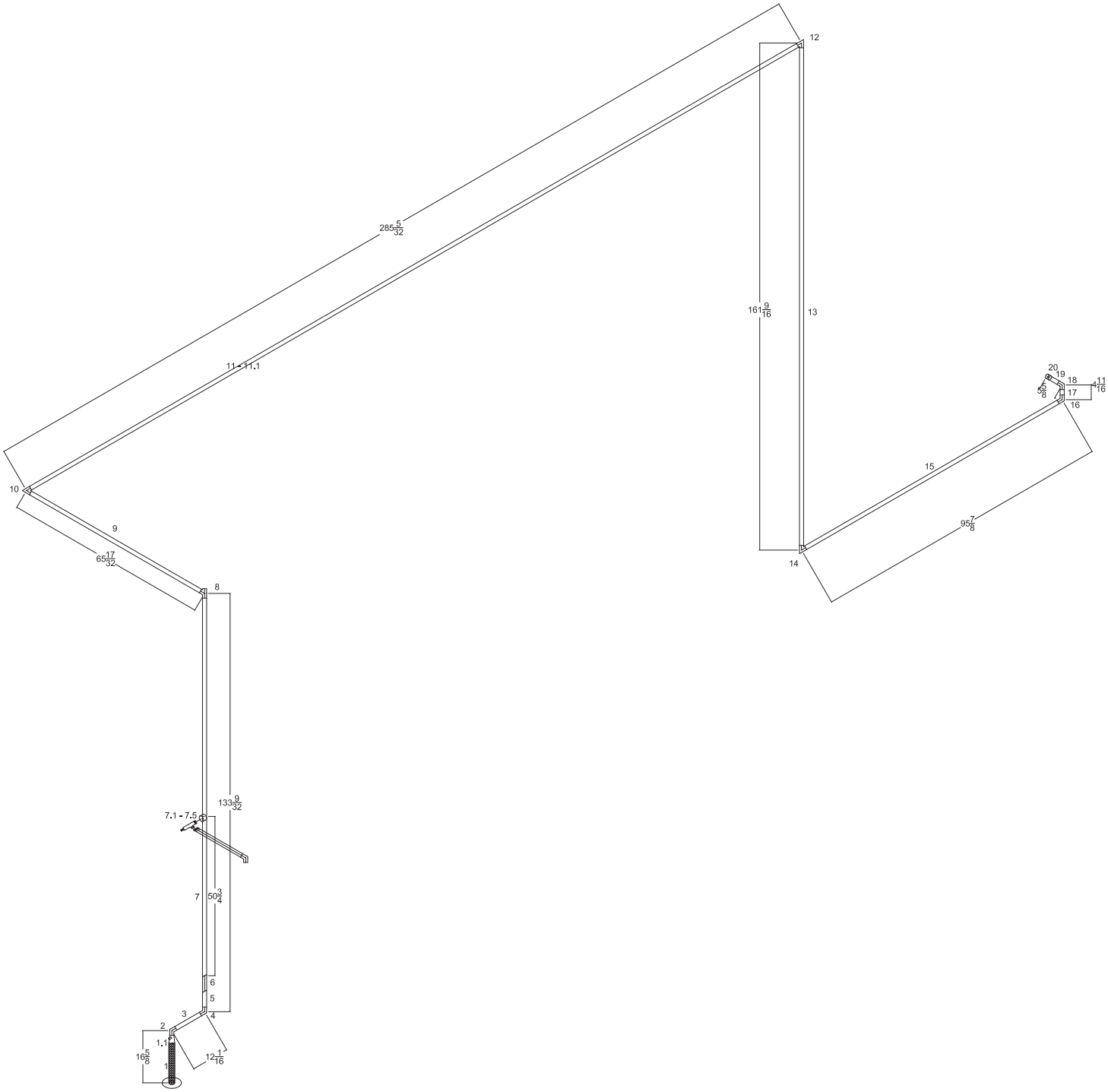
12
285 5/32
161 9/16
13
11 - 11.1
20
19
18
11/16
5/8
17
16
15
10
9
65 17/32
95 7/8
14
8
133 9/32
7.1 - 7.5
7
50 3/4
6
5
3
4
2
1.1
16 5/8
12 1/16
1

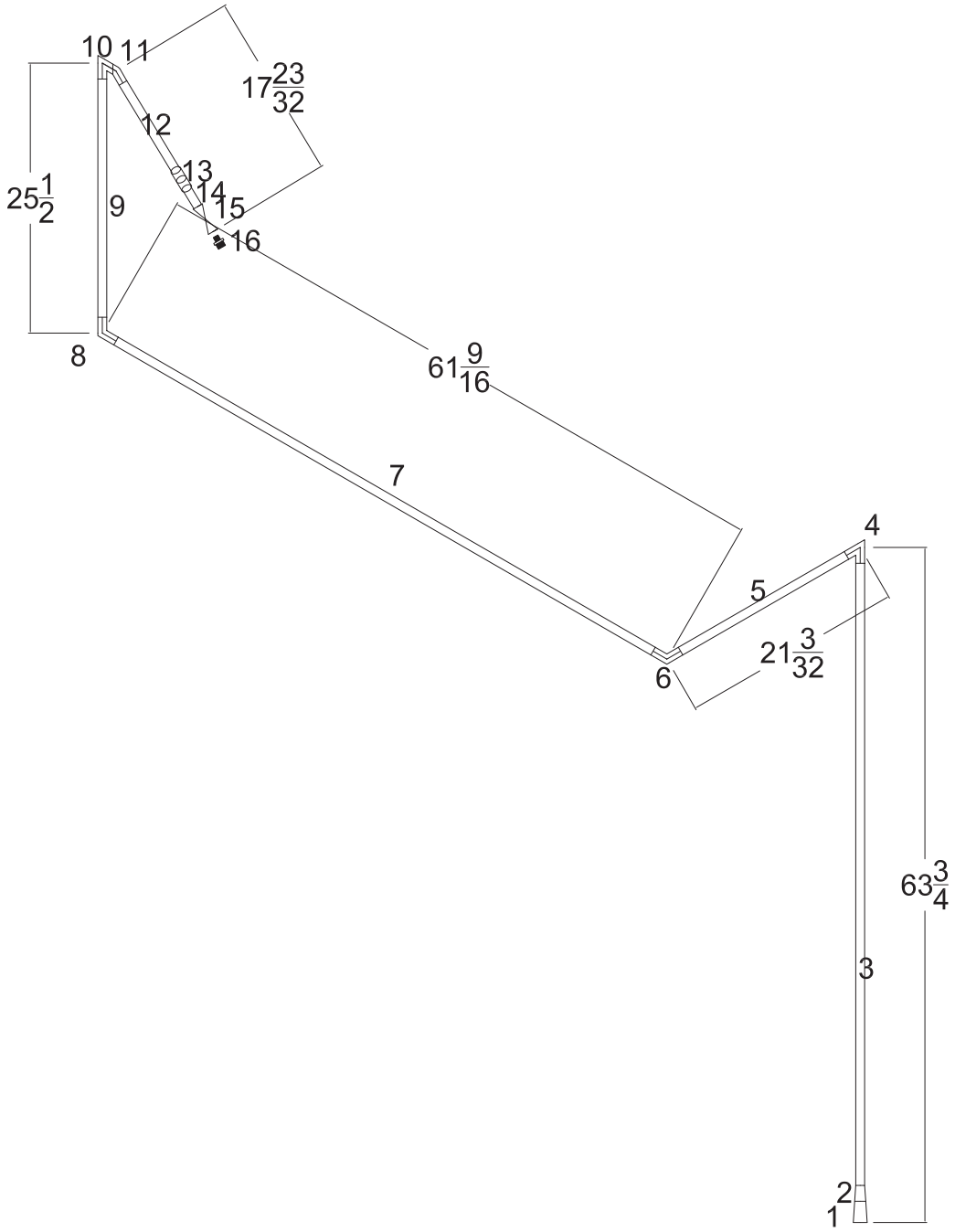
10
11
$17\frac{23}{32}$
12
13
14
15
16
$25\frac{1}{2}$
9
8
$61\frac{9}{16}$
7
4
5
$21\frac{3}{32}$
6
$63\frac{3}{4}$
3
2
1

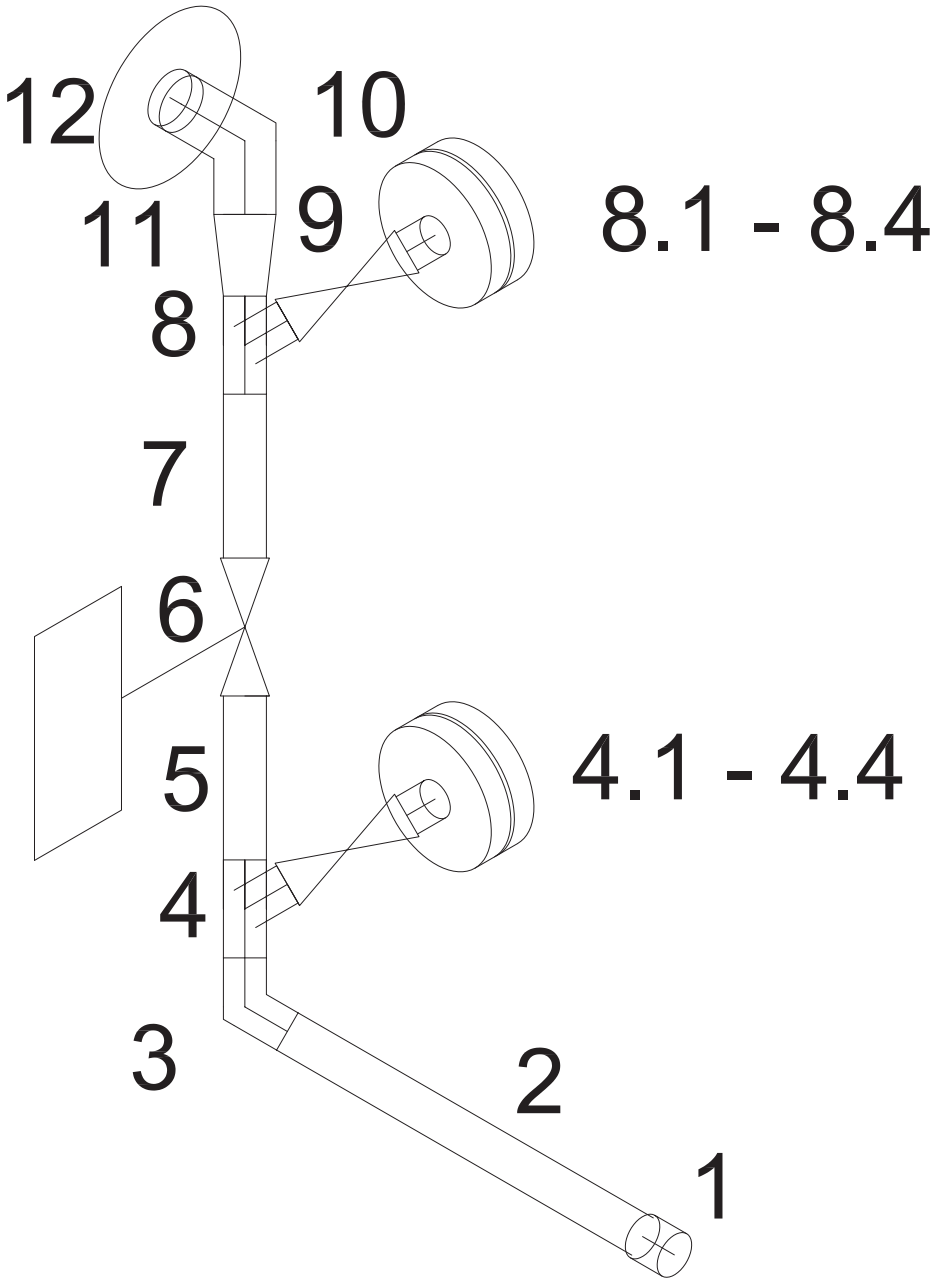
12
10
11
9
8.1 - 8.4
8
7
6
5
4.1 - 4.4
4
3
2
1

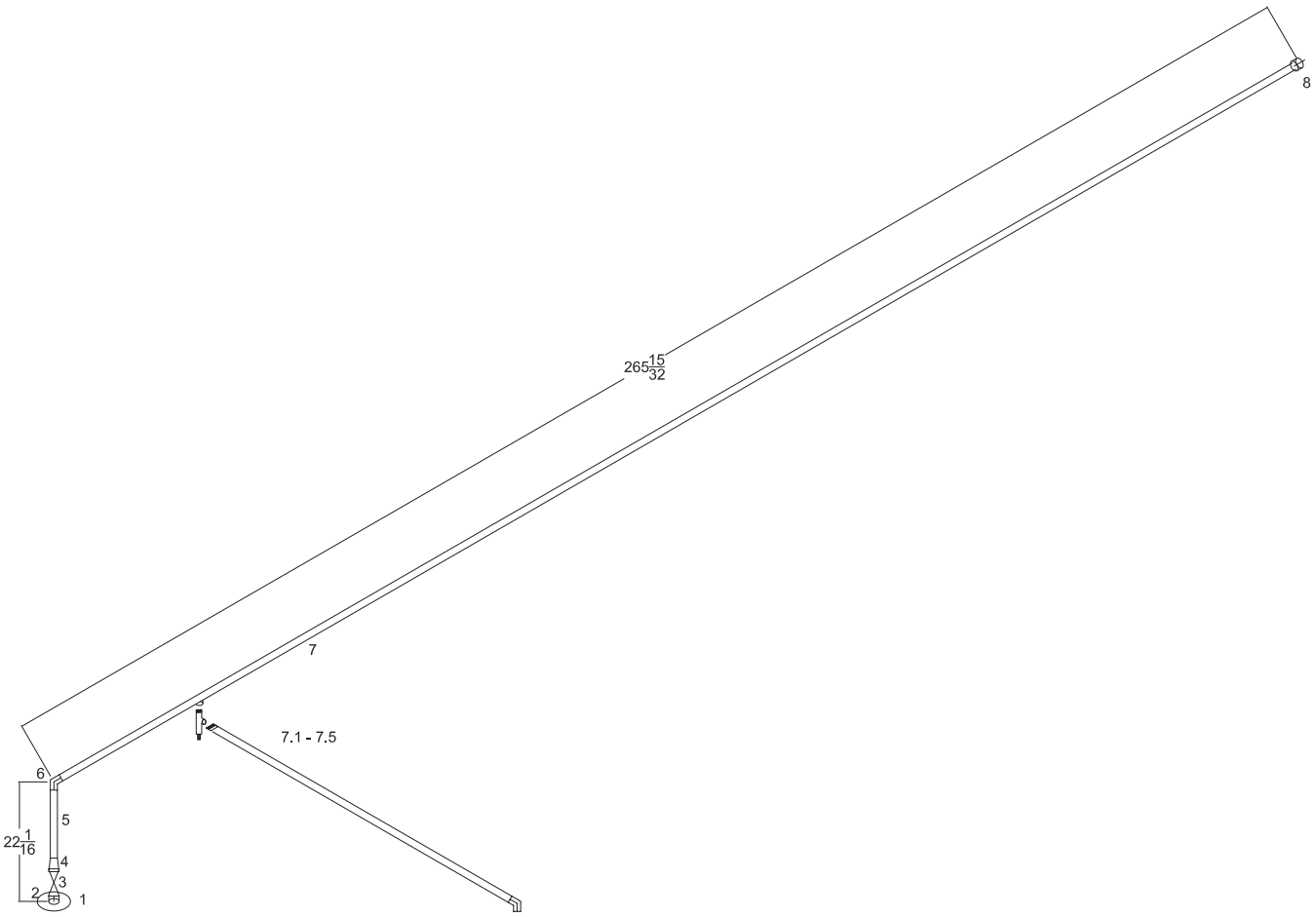
8
265 15/32
7
7.1 - 7.5
6
5
22 1/16
4
3
2
1

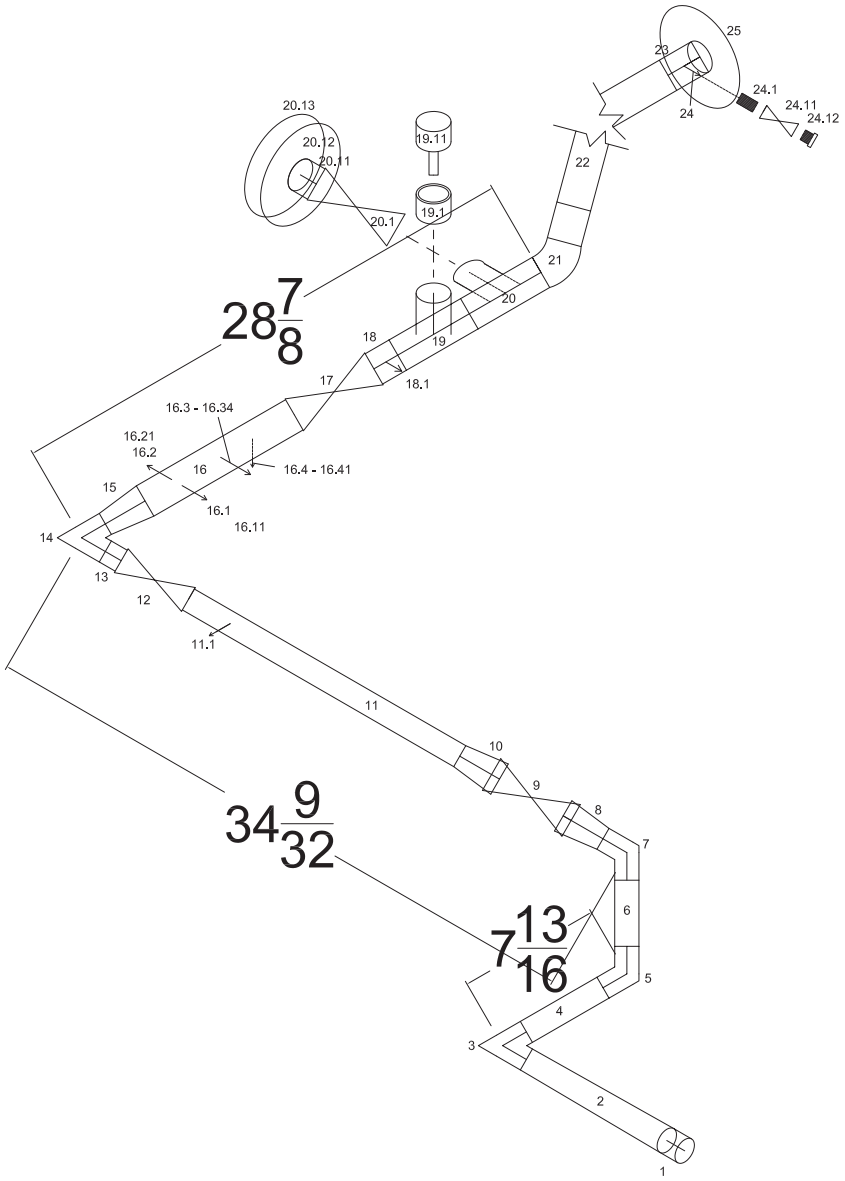
25
23
24.1
24.11
24.12
24
20.13
20.12
20.11
19.11
22
20.1
19.1
21
20
$28\frac{7}{8}$
18
19
18.1
17
16.3 - 16.34
16.21
16.2
16
16.4 - 16.41
15
16.1
16.11
14
13
12
11.1
11
10
9
8
7
$34\frac{9}{32}$
6
$7\frac{13}{16}$
5
4
3
2
1

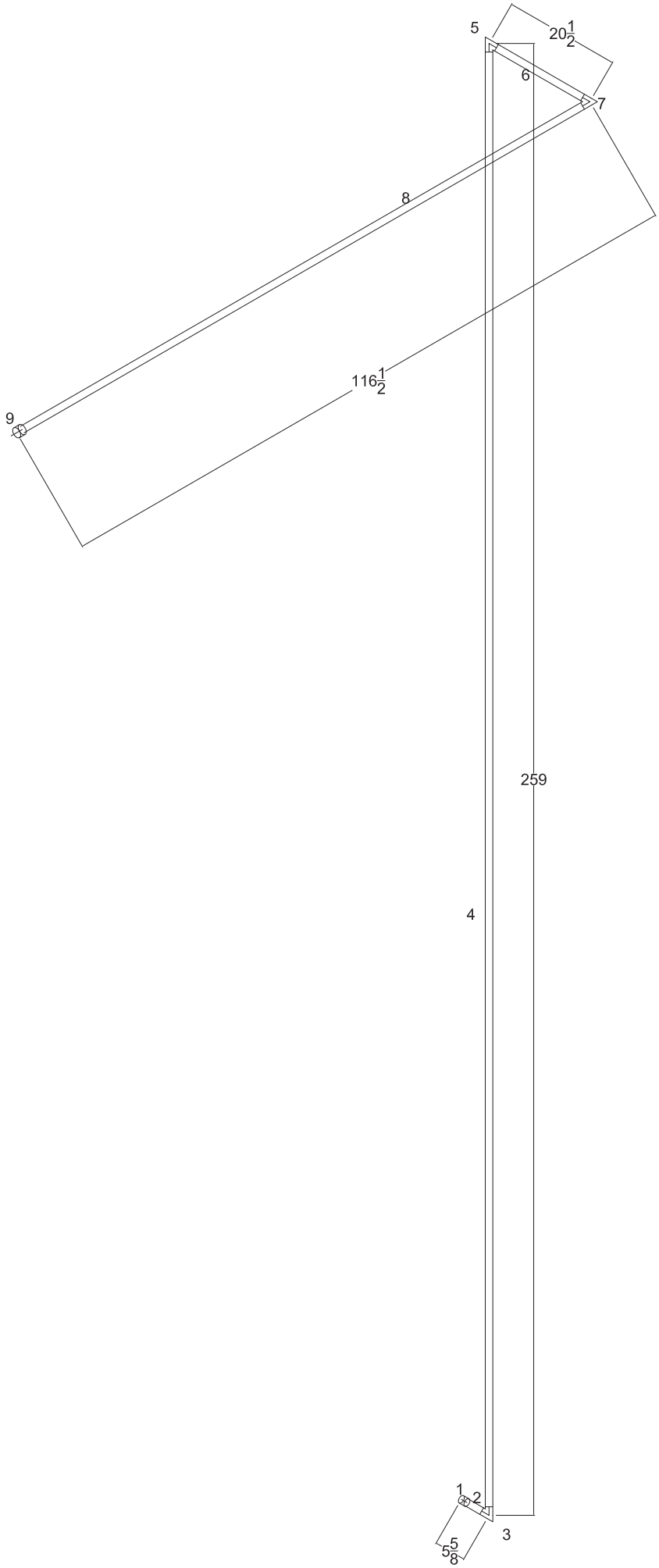
5
20 1/2
6
7
8
116 1/2
9
259
4
1
2
3
5 5/8

A9

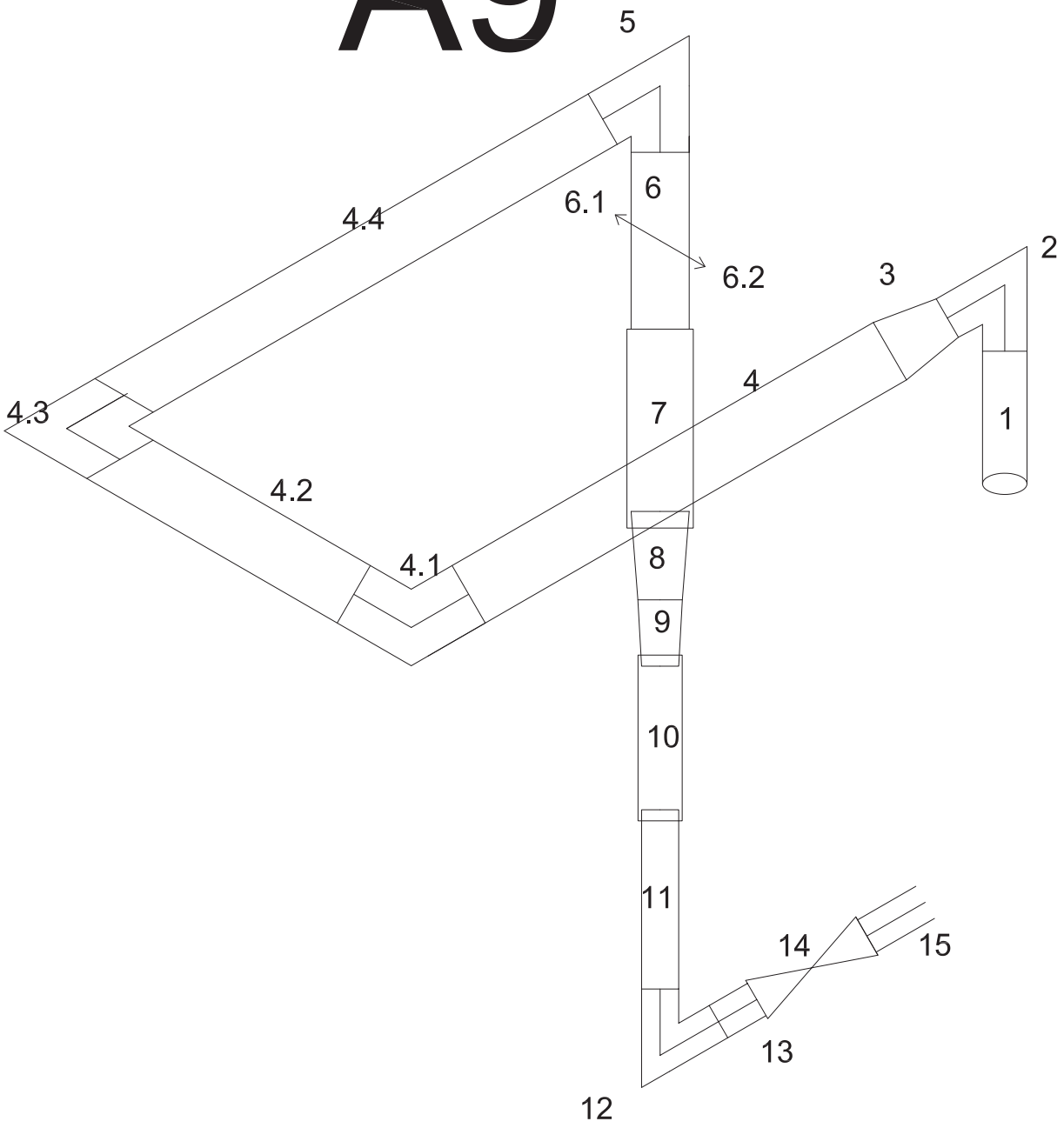

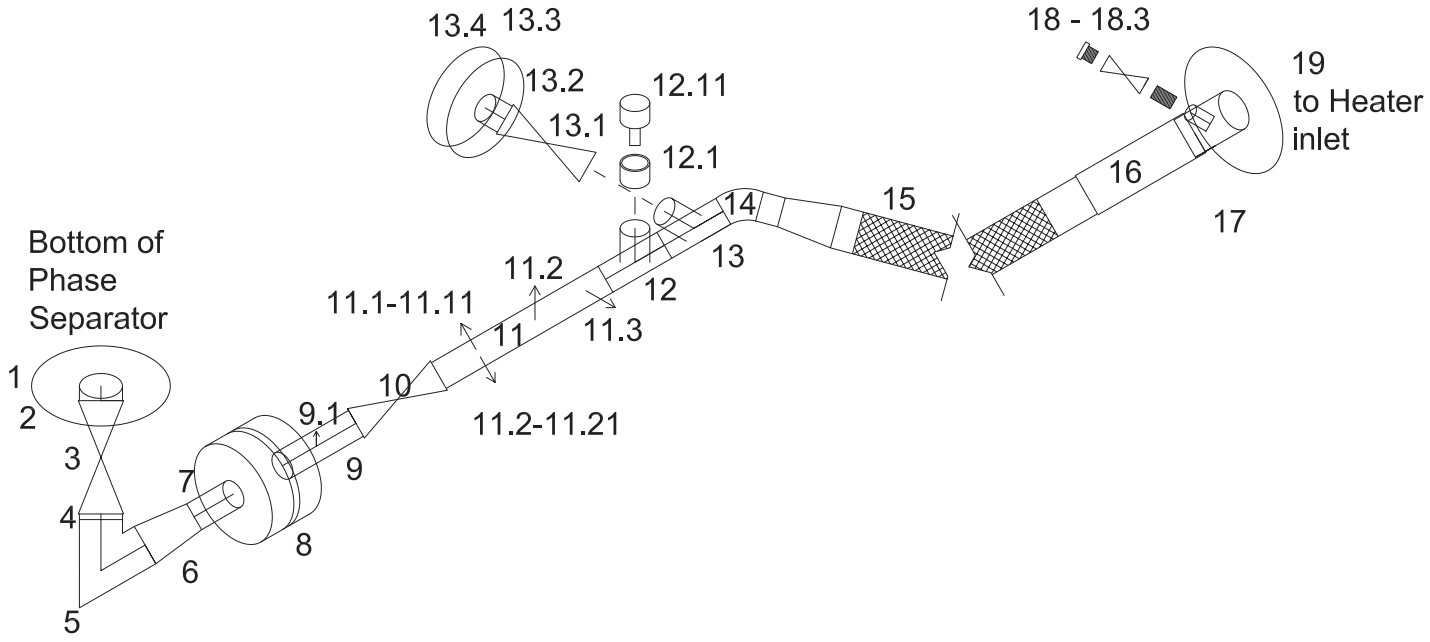
13.4
13.3
13.2
12.11
13.1
12.1
18 - 18.3
19
to Heater
inlet
16
15
14
17
13
12
11.2
11.1-11.11
11
11.3
Bottom of
Phase
Separator
1
2
3
4
5
6
7
8
9.1
9
10
11.2-11.21

WL 5821C006 ~07
WL 5821C017 ~19

MILL INSPECTION CERTIFICATE

CHANGSHU WALSIN SPECIALTY STEEL CO.,LTD.

EN10204 3.1

WLPS4498

CUSTOMER:
DATE OF ISSUE: 2009/07/09

COMMODITY: STAINLESS STEEL SEAMLESS PIPES

HEAT NO.: 3B712
CONDITION: COLD FINISHED, ANNEALED, PICKLED, PLAIN END
CERTIFICATE NO.: 200907098962006
GRADE: TP304/304L

CHEMICAL COMPOSITION (WT%)

ELEMENTS		C	Si	Mn	P	S	Ni	Cr	Mo	N	Cu	Ti	Cb+Ta	Co	Al	V	B		
SPECIFICATION	min						8.000	18.000											
	max	0. 035	1. 000	2.000	0.045	0.030	11.000	20.000											
RESULTS (LADLE)		0.017	0.3	1.77	0.025	0.002	8.52	18.32											
RESULTS(PRODUCT)		0.013	0.3	1.82	0.026	0.002	8.43	18.35											

SIZE NPS(")*SCH(")	PKG NO.	PIECES	WEIGHT FT	WEIGHT (kg)	TS MPa	YS 0.2% MPa	YS 1% MPa	EL %	HARDNESS HRB	FLATTENING TEST	FLARING TEST	I.C. TEST	GRAIN SIZE	HYDROSTATIC TEST	EDDY CURRENT TEST	ULTRASONIC TEST
1"*80S	AC-13	53	1193	1204	545	285	/	57.5	79	GOOD	/	GOOD	/	/	GOOD	/
3/4"*40S	AC-4	74	1627	856	590	290	/	64	78	GOOD	/	GOOD	/	/	GOOD	/
1"*80S	DC-22	49	1124	1132	560	330	/	56.5	84	GOOD	/	GOOD	/	/	GOOD	/
1/2"*80S	DC-29	99	2123	1062	565	245	/	60.5	75	GOOD	/	GOOD	/	/	GOOD	/
1/2"*10S	DC-55	30	674	211	555	285	/	66	79	GOOD	/	GOOD	/	/	GOOD	/
TOTAL:		305	6741	4465												

REMARK:
AS PER ASTM A312-08/A376-06,ASME SA312-07/SA376-07
NACE MR0175:2003
LENGTH : 20/24FT
AS PER PROFORMA INVOICE NO.:L26088
I.C.TEST PER ASTM A262-02a E MIL-P24691/3 MIL-P1144D
NO REPAIR BY WELDING
MATERIAL FREE FROM MERCURY CONTAMINATION MELTED & MANUFACTURED IN CHINA
ET standard practice: ASTM E426
Reference discontinuity : drilled hole water quenched
ANNEALING TEMPERATURE:1060℃

1.WE HEREBY CERTIFY THAT THE MATERIAL DESCRIBED HEREIN BEEN MADE IN ACCORDANCE WITH THE RESULTS OF THE CONTRACT, AND CONFORM TO THE SPECIFICATION ABOVE.

2.THE CERTIFICATE SHALL NOT BE REPRODUCED EXCEPT IN FULL WITHOUT THE WRITTEN APPROVAL OF THE COMPANY.

Bin Sun

DIRECTOR , TECHNOLOGY

WLCS-QP-T24-06

MILL INSPECTION CERTIFICATE

WL 58677022 N23

CHANGSHU WALSIN SPECIALTY STEEL CO.,LTD.

EN10204 3.1

WLPS4668

CUSTOMER:

2009/08/01

COMMODITY: STAINLESS STEEL SEAMLESS PIPES

HEAT NO.: 3B863
CONDITION:COLD FINISHED, ANNEALED, PICKLED, PLAIN END
CERTIFICATE NO.: 200908068962012
GRADE: TP304/304L

CHEMICAL COMPOSITION (WT%)

ELEMENTS		C	Si	Mn	P	S	Ni	Cr	Mo	N	Cu	Ti	Cb+Ta	Co	Al	V	B		
SPECIFICATION	min						8.000	18.000											
	max	0. 035	1. 000	2.000	0.045	0.030	11.000	20.000											
RESULTS (LADLE)		0.016	0.330	1.760	0.024	0.002	8.090	18.150											
RESULTS(PRODUCT)		0.014	0.339	1.762	0.025	0.002	8.072	18.136											

SIZE(mm) NPS(")*SCH(")	BUNDLE NO.	PIECES	WEIGHT FT	WEIGHT (kg)	TS MPa	YS 0.2% MPa	YS 1% MPa	EL %	HARDNESS HRB	FLATTENING TEST	FLARING TEST	I.C. TEST	GRAIN SIZE	HYDROSTATIC TEST	EDDY CURRENT TEST	ULTRASONIC TEST
1 1/2"*40S	YH-2	40	883	1094	550/560	285/285	/	58/58	78/78	GOOD	/	GOOD	/	/	GOOD	/
2 "*10S	2D-45	24	516	619	540	305	/	55.5	75	GOOD	/	GOOD	/	/	GOOD	/
TOTAL:		64	1399	1713												

REMARK:
AS PER ASTM A312-08/A376-06,ASME SA312-07/SA376-07
NACE MR0175:2003
LENGTH : 20/24FT
AS PER PROFORMA INVOICE NO.:L26089
I.C.TEST PER ASTM A262-02a E MIL-P24691/3 MIL-P1144D
NO REPAIR BY WELDING
MATERIAL FREE FROM MERCURY CONTAMINATION
MELTED & MANUFACTURED IN CHINA
ET standard practice: ASTM E426
Reference discontinuity : drilled hole water quenched
ANNEALING TEMPERATURE:1060℃

1.WE HEREBY CERTIFY THAT THE MATERIAL DESCRIBED HEREIN BEEN MADE IN ACCORDANCE WITH THE RESULTS OF THE CONTRACT, AND CONFORM TO THE SPECIFICATION ABOVE.

2.THE CERTIFICATE SHALL NOT BE REPRODUCED EXCEPT IN FULL WITHOUT THE WRITTEN APPROVAL OF THE COMPANY.

Bin Sun

QUALITY MANAGER

WLCS-QP-T24-06

MILL INSPECTION CERTIFICATE

WL 6521100 7~08; WL 6521107 5~16

WALSN

TÜV CERT DIN EN ISO9001 NO.05 100 21166 | TÜV | TÜV | TÜV

CHANGSHU WALSIN SPECIALTY STEEL CO.,LTD.

EN10204 3.1

WLPS5491

CUSTOMER:

2010/04/28

COMMODITY: STAINLESS STEEL SEAMLESS PIPES

HEAT NO.: 00910955

CONDITION:COLD FINISHED, ANNEALED, PICKLED, PLAIN END

CERTIFICATE NO.: 201004288962004

GRADE: TP304/304L

CHEMICAL COMPOSITION (WT%)

ELEMENTS		C	Si	Mn	P	S	Ni	Cr	Mo	N	Cu	Ti	Cb+Ta	Co	Al	V	B		
SPECIFICATION	min						8.000	18.000											
	max	0.035	0.750	2.000	0.045	0.030	11.000	20.000											
RESULTS (LADLE)		0.025	0.460	1.650	0.027	0.001	8.690	18.270											
RESULTS(PRODUCT)		0.025	0.497	1.605	0.021	0.002	8.547	18.459											

SIZE(mm) NPS(")*SCH(")	BUNDLE NO.	PIECES	WEIGHT FT	WEIGHT (kg)	TS MPa	YS 0.2% MPa	YS 1% MPa	EL (50mm) %	HARDNESS HRB	FLATTENING TEST	FLARING TEST	I.C. TEST	GRAIN SIZE	Lot No.	HYDROSTATIC TEST	EDDY CURRENT TEST	ULTRASONIC TEST
1*10S	K-2	55	1198.13	792	615/605	340/340	/	50.5/52	81/82	ACCEPTABLE	/	ACCEPTABLE	/	201002-A-335	/	ACCEPTABLE	/
3/4*40S	K-23	73	1610.53	835	655/645	320/310	/	59/59	82/81	ACCEPTABLE	/	ACCEPTABLE	/	201003-A-030	/	ACCEPTABLE	/
1 1/4*40S	K-35	24	552.43	591	635/645	365/380	/	53/50.5	85/86	ACCEPTABLE	/	ACCEPTABLE	/	201003-A-506	/	ACCEPTABLE	/
1 1/4*40S	K-36	23	526.67	563	635/645	365/380	/	53/50.5	85/86	ACCEPTABLE	/	ACCEPTABLE	/	201003-A-506	/	ACCEPTABLE	/
1 1/4*40S	K-37	25	574.15	606	620/635	345/355	/	56/52.5	83/84	ACCEPTABLE	/	ACCEPTABLE	/	201003-A-522	/	ACCEPTABLE	/
3/8*80S	K-86	60	1389.76	467	605/605	275/270	/	57/58	76/76	ACCEPTABLE	/	ACCEPTABLE	/	201003-A-106	/	ACCEPTABLE	/
3/8*80S	K-87	65	1494.36	503	605/605	275/270	/	57/58	76/76	ACCEPTABLE	/	ACCEPTABLE	/	201003-A-106	/	ACCEPTABLE	/
TOTAL:		325	7346.03	4357													

REMARK:
AS PER ASTM A312-09/A376-06,ASME SA312-07/SA376-07
NACE MR0175:2003
LENGTH : 20/24FT
AS PER PROFORMA INVOICE NO.:L27690
I.C.TEST PER ASTM A262-02a E MIL-P24691/3 MIL-P1144D
NO REPAIR BY WELDING
MATERIAL FREE FROM MERCURY CONTAMINATION
MELTED & MANUFACTURED IN CHINA
ET standard practice: ASTM E426
Reference discontinuity : drilled hole water quenched
ANNEALING TEMPERATURE:1060℃

1.WE HEREBY CERTIFY THAT THE MATERIAL DESCRIBED HEREIN BEEN MADE IN ACCORDANCE WITH THE RESULTS OF THE CONTRACT, AND CONFORM TO THE SPECIFICATION ABOVE.

2.THE CERTIFICATE SHALL NOT BE REPRODUCED EXCEPT IN FULL WITHOUT THE WRITTEN APPROVAL OF THE COMPANY.

Huikan Yang

QUALITY MANAGER

WLCS-QP-T24-06

MILL INSPECTION CERTIFICATE

CHANGSHU WALSIN SPECIALTY STEEL CO.,LTD

EN10204 3.1B

WLBS1797

CUSTOMER:

2007/07/01

COMMODITY: STAINLESS STEEL SEAMLESS PIPES

HEAT NO.: M0704-505

CONDITION:COLD FINISHED, ANNEALED, PICKLED, PLAIN END

CERTIFICATE NO.: 200707018962010

GRADE: TP304/304L

CHEMICAL COMPOSITION (WT%)

ELEMENTS		C	Si	Mn	P	S	Ni	Cr	Mo	N	Cu	Ti	Cb+Ta	Co	Al	V	B		
SPECIFICATION	min						8.000	18.000											
	max	0. 035	1. 000	2.000	0.045	0.030	11.000	20.000											
RESULTS (LADLE)		0.025	0.320	0.670	0.031	0.001	9.050	18.590											
RESULTS(PRODUCT)		0.020	0.350	0.680	0.035	0.001	9.180	18.380											

SIZE(mm) OD(") ×WT(")	BUNDLE NO.	PIECES	WEIGHT FT	WEIGHT (kg)	TS MPa	YS 0.2% MPa	YS 1% MPa	EL %	HARDNESS HRB	FLATTENING TEST	FLARING TEST	I.C. TEST	GRAIN SIZE	HYDROSTATIC TEST	EDDY CURRENT TEST	ULTRASONIC TEST
1 1/2"*10S	SF-8	22	469	461	510	305	/	55	/	GOOD	/	GOOD	/	/	GOOD	/
TOTAL:		22	469	461												

REMARK:
AS PER ASTM A312-02/A376-02,ASME SA312-02/SA376-02
NACE MR0175:2003
LENGTH : 20/24 FT
AS PER PROFORMA INVOICE NO.:L19855
I.C.TEST PER ASTM A262-02a E MIL-P24691/3 MIL-P1144D
NO REPAIR BY WELDING
MATERIAL FREE FROM MERCURY CONTAMINATION ELTED &
MANUFACTURED IN CHINA ET standard practice: ASTM E426
Reference discontinuity : drilled hole
water quenched

1.WE HEREBY CERTIFY THAT THE MATERIAL DESCRIBED HEREIN BEEN MADE IN ACCORDANCE WITH THE RESULTS OF THE CONTRACT, AND CONFORM TO THE SPECIFICATION ABOVE.

2.THE CERTIFICATE SHALL NOT BE REPRODUCED EXCEPT IN FULL WITHOUT THE WRITTEN APPROVAL OF THE

DIRECTOR , TECHNOLOGY

WLCS-QP-T24-06

WL 65217001
WL 65217004 ~ 05

MILL INSPECTION CERTIFICATE

CHANGSHU WALSIN SPECIALTY STEEL CO.,LTD.

EN10204 3.1

WLPS5452

CUSTOMER:

2010/04/29

COMMODITY: STAINLESS STEEL SEAMLESS PIPES

HEAT NO.: 00910955
CONDITION:COLD FINISHED, ANNEALED, PICKLED, PLAIN END
CERTIFICATE NO.: 201004298962001
GRADE: TP304/304L

CHEMICAL COMPOSITION (WT%)

ELEMENTS		C	Si	Mn	P	S	Ni	Cr	Mo	N	Cu	Ti	Cb+Ta	Co	Al	V	B		
SPECIFICATION	min						8.000	18.000											
	max	0. 035	0. 750	2.000	0.045	0.030	11.000	20.000											
RESULTS (LADLE)		0.025	0.460	1.650	0.027	0.001	8.690	18.270											
RESULTS(PRODUCT)		0.021	0.474	1.575	0.025	0.002	8.667	18.418											

SIZE(mm) NPS(")*SCH(")	BUNDLE NO.	PIECES	WEIGHT FT	WEIGHT (kg)	TS MPa	YS 0.2% MPa	YS 1% MPa	El. (50mm) %	HARDNESS HRB	FLATTENING TEST	FLARING TEST	I.C. TEST	GRAIN SIZE	Lot No.	HYDROSTATIC TEST	EDDY CURRENT TEST	ULTRASONIC TEST
1/2*80S	12-1#	76	1754.2	839	625/625	310/305	/	58/56	81/80.5	ACCEPTABLE	/	ACCEPTABLE	/	201004-L-045	/	ACCEPTABLE	/
1*10S	2-1#	32	716.31	458	615/605	340/340	/	50.5/52	81/82	ACCEPTABLE	/	ACCEPTABLE	/	201002-A-335	/	ACCEPTABLE	/
1/2*40S	2-2#	63	1454.79	555	590/595	250/255	/	63/64	75.5/76	ACCEPTABLE	/	ACCEPTABLE	/	201003-A-363	/	ACCEPTABLE	/
TOTAL:		171	3925.3	1852													

REMARK:
AS PER ASTM A312-09/A376-06,ASME SA312-07/SA376-07
NACE MR0175:2003
LENGTH : 20/24FT
AS PER PROFORMA INVOICE NO.:L27690
I.C.TEST PER ASTM A262-02a E MIL-P24691/3 MIL-P1144D
NO REPAIR BY WELDING
MATERIAL FREE FROM MERCURY CONTAMINATION MELTED & MANUFACTURED IN CHINA
ET standard practice: ASTM E426
Reference discontinuity : drilled hole water quenched
ANNEALING TEMPERATURE:1060℃

1.WE HEREBY CERTIFY THAT THE MATERIAL DESCRIBED HEREIN BEEN MADE IN ACCORDANCE WITH THE RESULTS OF THE CONTRACT, AND CONFORM TO THE SPECIFICATION ABOVE.

2.THE CERTIFICATE SHALL NOT BE REPRODUCED EXCEPT IN FULL WITHOUT THE WRITTEN APPROVAL OF THE COMPANY.

Huikai Yang

QUALITY MANAGER

WLCS-QP-T24-06

Fermilab

PURCHASE REQUISITION

Requisition

Requisition Number (Filled in by System)	Oracle Preparer (Filled in by System)	Date	Request Originator:	Extension:
		08/05/10	Erik Voirin	#5168
Division/Section Approval		Date	NEPA Approval	
Business Office Approval		Date		
Directorate Approval		Date		

Requisition Header

Description (of entire requisition)
Swing Type Check Valves

Note to Approver
For the CMS CO2 cooling system. Ref. Quote #7220652

Justification (To Approver)

Requisition Entry Defaults

Requester	Deliver-To-Location	Buyer Note (use attachments)	
Erik Voirin	**Lab F**		
Suggested Vendor	Suggested Vendor Site	Suggested Vendor Contact	Suggested Vendor
McJunkin	4026 MOUND ROAD JOLIET IL 60436	ANNE ALCORN	Telephone: 815-729-7742
Reference # / Need-By-Date	Project/Task/Expenditure Type and Expenditure Organization		Building Maintenance: Yes or No (Circle One)
08/15/10	45A / 45A.20.16.2.11.3.1		FIMS #
Note to Receiver			Total of Requisition
This is for CMS CO2 Cooling System			$1235.53

Requisition Lines

Line #	Line Type	PO Line Category	Description (Start with a Noun) (240 Characters Maximum, Enter Additional Description in Cell Below Line Item)	Quantity, Unit of Measure and Price		Project Information		Split Coding Qty's
1	GR	Check Valve	6985-XXXX 1.0000 EA 305.1800 305.18 08/03/10 1/2" VELAN W03-2114C-14GX 600# 316SS SW CHECK VALVE (BORED OUT FROM THRD) ** AND CHANGED TO SX TRIM (TEFLON GSKT) UN Number Hazard Class	Quantity	1	Project	45A	
				Unit of Measure	each	Task	45A.20.16.2.11.3.1	
				Price per Unit	$305.18	Exp. Type	Material purchase	
				Extended Price	$305.18	Exp. Org.	CMS	

Line #	Line Type	PO Line Category	Description (Start with a Noun) (240 Characters Maximum, Enter Additional Description in Cell Below Line Item)	Quantity, Unit of Measure and Price		Project Information		Split Coding Qty's
2	GR	Check Valve	6985-XXXX 1.0000 EA 413.7500 413.75 08/03/10 1" VELAN W05-2114C-14GX 600# 316SS SW CHECK VALVE (BORED FROM THRD) ** CHANGED TO 13SX W/ TEFLON GSKT *** UN Number Hazard Class	Quantity	1	Project	45A	
				Unit of Measure	Each	Task	45A.20.16.2.11.3.1	
				Price per Unit	$413.75	Exp. Type	Material purchase	
				Extended Price	$413.75	Exp. Org.	CMS	

Line #	Line Type	PO Line Category	Description (Start with a Noun) (240 Characters Maximum, Enter Additional Description in Cell Below Line Item)	Quantity, Unit of Measure and Price		Project Information		Split Coding Qty's
3	GR	Check Valve	6985-XXXX 1.0000 EA 516.6000 516.60 08/03/10 1-1/2 VELAN W07-2114C 14GX 600# 316 SW CHECK VALVE (BORED FROM THRD) ** MODIFIED TO 13SX W/ TEFLON GASKET UN Number Hazard Class	Quantity	1	Project	45A	
				Unit of Measure	Each	Task	45A.20.16.2.11.3.1	
				Price per Unit	$516.60	Exp. Type	Material purchase	
				Extended Price	$516.60	Exp. Org.	CMS	

Fermilab

PURCHASE REQUISITION

Requisition

Requisition Number (Filled in by System)	Oracle Preparer (Filled in by System)	Date	Request originator:	Extension: 5168
		08/18/10	Erik Voirin	MS: 219
Division/Section Approval		Date	NEPA Approval	
Business Office Approval		Date		
Directorate Approval		Date		

Requisition Header

Description (of entire requisition)
Manual Control Valve for regulating saturated mixture CO2 flow out of phase separation tank returning to storage tank.

Note to Approver

Justification (To Approver)

Requisition Entry Defaults

Requester	Deliver-To-Location	Buyer Note (use attachments) (i.e., Previous PO)	
Erik Voirin	Lab F		
Suggested Vendors	Suggested Vendor Site	Suggested Vendor Contact	Suggested Vendors
FCX Performance Inc	55 N Lively Blvd Elk Grove Village, IL 60007-1618	Michael McKee	Telephone # 847-806-1885
Reference # / Need-By-Date: 09-10-2010	Project/Task/Expenditure Type and Expenditure Organization: 45A / 45A.20.16.2.11.3.1		Building Maintenance: Yes or No (Circle One) / FIMS #
Note to Receiver: This is for CMS CO2 Cooling System			Total of Requisition: $280.00

Requisition Lines

Line #	Line Type	PO Line Category	Description (Start with a Noun) (240 Characters Maximum, Enter Additional Description in Cell Below Line Item)	Quantity, Unit of Measure and Price		Project Information		Split Coding Qty's
1	GR	Manual Control Valve	1pc Part Number- V8-SW-0050-SXX-3, 1/2" 3-Piece, 316SST BV Socket Weld Ends 30 Deg V-Port, 50% STFE Seats. Your cost $280.00 Net. UN Number Hazard Class	Quantity	1	Project	45A	
				Unit of Measure	each	Task	45A.20.16.2.11.3.1	
				Price per Unit	$280.00	Exp. Type	Material purchase	
				Extended Price	$280.00	Exp. Org.	CMS	

Fermilab

PURCHASE REQUISITION

Requisition

Requisition Number (Filled in by System)	Oracle Preparer (Filled in by System)	Date	Request originator:	Extension: 5168
		09/07/10	Erik Voirin	MS: 219
Division/Section Approval		Date	NEPA Approval	
Business Office Approval		Date		
Directorate Approval		Date		

Requisition Header

Description (of entire requisition) Flange Gaskets for CMS CO2 piping and vessel flanges.
Note to Approver
Justification (To Approver)

Requisition Entry Defaults

Requester		Deliver-To-Location	Buyer Note (use attachments) (i.e., Previous PO)		
Erik Voirin		Lab F			
Suggested Vendors		Suggested Vendor Site		Suggested Vendor Contact	Suggested Vendors
Schimberg Co.		1106 Shaver rd. N.E. Cedar Rapids, IA 52402		Steve Reck	Telephone 800-728-9421
Reference #	Need-By-Date	Project/Task/Expenditure Type and Expenditure Organization			Building Maintenance: No
	9/30/2010	45A / 45A.20.16.2.11.3.1			FIMS #
Note to Receiver					Total of Requisition
					$939.48

Requisition Lines

Line #	Line Type	PO Line Category	Description (Start with a Noun) (240 Characters Maximum, Enter Additional Description in Cell Below Line Item)	Quantity, Unit of Measure and Price		Project Information		Split Coding Qty's
1	GR	gaskets	Flange Gasket N200 CGI 316L/316L/PTFE/316L 600#12 316L Inner Ring, outer ring, windings and Teflon Filler 600# Class 12" P/N: 1200602020602 UN Number Hazard Class	Quantity	3	Project	45A	
				Unit of Measure	each	Task	45A.20.16.2.11.3.1	
				Price per Unit	$ 200.12	Exp. Type	Material purchase	
				Extended Price	$600.36	Exp. Org.	CMS	

Requisition Lines

Line #	Line Type	PO Line Category	Description (Start with a Noun) (240 Characters Maximum, Enter Additional Description in Cell Below Line Item)	Quantity, Unit of Measure and Price		Project Information		Split Coding Qty's
2	GR	gaskets	Flange Gasket N200 CGI 316L/316L/PFTE/316L 1-1/2" 3/4/600# Spiral Gasket 316L outer ring, Inner Ring, windings and Teflon Filler P/N: 0150302020602 UN Number Hazard Class	Quantity	15	Project	45A	
				Unit of Measure	each	Task	45A.20.16.2.11.3.1	
				Price per Unit	$ 18.60	Exp. Type	Material purchase	
				Extended Price	$279.00	Exp. Org.	CMS	

Requisition Lines

Line #	Line Type	PO Line Category	Description (Start with a Noun) (240 Characters Maximum, Enter Additional Description in Cell Below Line Item)	Quantity, Unit of Measure and Price		Project Information		Split Coding Qty's
3	GR	gaskets	Flange Gasket N200 CGI 316L/316L/PFTE/316L 1" 3/4/600# Spiral Gasket 316L outer ring, Inner Ring, windings and Teflon Filler P/N: 0100302020602 UN Number Hazard Class	Quantity	4	Project	45A	
				Unit of Measure	each	Task	45A.20.16.2.11.3.1	
				Price per Unit	$ 15.03	Exp. Type	Material purchase	
				Extended Price	$60.12	Exp. Org.	CMS	

Fermilab

PURCHASE REQUISITION

Requisition

Requisition Number (Filled in by System)	Oracle Preparer (Filled in by System)	Date	Request originator:	Extension: 5168
		09/08/10	Erik Voirin	MS: 219
Division/Section Approval		Date	NEPA Approval	
Business Office Approval		Date		
Directorate Approval		Date		

Requisition Header

Description (of entire requisition)
Flanges and Flex hoses for piping

Note to Approver

Justification (To Approver)

Requisition Entry Defaults

Requester	Deliver-To-Location	Buyer Note (use attachments) (i.e., Previous PO)	
Erik Voirin	Lab F		
Suggested Vendors	Suggested Vendor Site	Suggested Vendor Contact	Suggested Vendors
Janco Process Control	368 West Liberty Street, Suite H; Wauconda IL 60084	Nick Patitsas	Telephone # 847-526-0800
Reference # / Need-By-Date: 9/30/2010	Project/Task/Expenditure Type and Expenditure Organization: 45A / 45A.20.16.2.11.3.1		Building Maintenance: Yes or No (Circle One) / FIMS #
Note to Receiver: This is for CMS CO2 Cooling System			Total of Requisition: $1901.30

Requisition Lines

Line #	Line Type	PO Line Category	Description (Start with a Noun) (240 Characters Maximum, Enter Additional Description in Cell Below Line Item)	Quantity, Unit of Measure and Price		Project Information		Split Coding Qty's
1	GR	Pipe/ Fittings	304-24-FLG/SO-RF-600 1-1/2" SLIP-ON RF 600# FLANGE $59.50/ea UN Number Hazard Class	Quantity	11	Project	45A	
				Unit of Measure	each	Task	45A.20.16.2.11.3.1	
				Price per Unit	$59.50	Exp. Type	Material purchase	
				Extended Price	$654.50	Exp. Org.	CMS	

Line #	Line Type	PO Line Category	Description (Start with a Noun) (240 Characters Maximum, Enter Additional Description in Cell Below Line Item)	Quantity, Unit of Measure and Price		Project Information		Split Coding Qty's
2	GR	Pipe/ Fittings	304-24-FLG/BL-RF-600 1-1/2" BLIND RF FLANGE $48.70 UN Number Hazard Class	Quantity	3	Project	45A	
				Unit of Measure	each	Task	45A.20.16.2.11.3.1	
				Price per Unit	$48.70	Exp. Type	Material purchase	
				Extended Price	$146.10	Exp. Org.	CMS	

Line #	Line Type	PO Line Category	Description (Start with a Noun) (240 Characters Maximum, Enter Additional Description in Cell Below Line Item)	Quantity, Unit of Measure and Price		Project Information		Split Coding Qty's
3	GR	Pipe/ Fittings	304-16-FLG/SO-RF-600 1" SLIP-ON RF 600# FLANGE $36.90/ea UN Number Hazard Class	Quantity	3	Project	45A	
				Unit of Measure	each	Task	45A.20.16.2.11.3.1	
				Price per Unit	$39.60	Exp. Type	Material purchase	
				Extended Price	$118.80	Exp. Org.	CMS	

Line #	Line Type	PO Line Category	Description (Start with a Noun) (240 Characters Maximum, Enter Additional Description in Cell Below Line Item)	Quantity, Unit of Measure and Price		Project Information		Split Coding Qty's
4	GR	Pipe/ Fittings	304-16-FLG/BL-RF-600 1" BLIND RF FLANGE $34.45/ea UN Number Hazard Class	Quantity	3	Project	45A	
				Unit of Measure	each	Task	45A.20.16.2.11.3.1	
				Price per Unit	$34.45	Exp. Type	Material purchase	
				Extended Price	$103.35	Exp. Org.	CMS	

Line #	Line Type	PO Line Category	Description (Start with a Noun) (240 Characters Maximum, Enter Additional Description in Cell Below Line Item)	Quantity, Unit of Measure and Price		Project Information		Split Coding Qty's
5	GR	Pipe/ Fittings	CA-482239-1 $342.70 1.5" HF3455 HOSE X 12.0" OAL INLET: 304SS 1.5" SCH #10 PIPE WELD NIPPLE 37 DEG BEVEL, 1.0" Lg OUTLET: 304SS 1.5" 600# SOCKET WELD RF FLANGE UN Number Hazard Class	Quantity	1	Project	45A	
				Unit of Measure	each	Task	45A.20.16.2.11.3.1	
				Price per Unit	$342.70	Exp. Type	Material purchase	
				Extended Price	$342.70	Exp. Org.	CMS	

Line #	Line Type	PO Line Category	Description (Start with a Noun) (240 Characters Maximum, Enter Additional Description in Cell Below Line Item)	Quantity, Unit of Measure and Price		Project Information		Split Coding Qty's
6	GR	Pipe/ Fittings	CA-482239-2 $379.25 1.5" HF3455 HOSE X 16.0" OAL INLET: 304SS SCH #10 CONICAL REDUCER 1-1/2" X 1" & WELD 304SS 1" SCH #10 X 1.0" Lg NIPPLE w/ 37 DEG BEVEL OUTLET: 304SS 1.5" 600# SOCKET WELD RF FLANGE UN Number Hazard Class	Quantity	1	Project	45A	
				Unit of Measure	each	Task	45A.20.16.2.11.3.1	
				Price per Unit	$379.25	Exp. Type	Material purchase	
				Extended Price	$379.25	Exp. Org.	CMS	

Line #	Line Type	PO Line Category	Description (Start with a Noun) (240 Characters Maximum, Enter Additional Description in Cell Below Line Item)	Quantity, Unit of Measure and Price		Project Information		Split Coding Qty's
7	GR	Control Valve	CA-482239-3 $156.60 1.0" HF3455 HOSE X 16.0" OAL INLET: 304SS 1.0" SCH #10 PIPE WELD NIPPLE 37 DEG BEVEL, 1.0" Lg OUTLET: WELD 304SS SCH # 10 CONICAL REDUCER 1-1/2" X 1", WELD 304SS SCH #10 1-1/2" WELD NIPPLE 1.0" Lg w/ 37 DEG BEVEL UN Number Hazard Class	Quantity	1	Project	45A	
				Unit of Measure	each	Task	45A.20.16.2.11.3.1	
				Price per Unit	$156.60	Exp. Type	Material purchase	
				Extended Price	$156.60	Exp. Org.	CMS	

Fermilab

PURCHASE REQUISITION

Requisition

Requisition Number (Filled in by System)	Oracle Preparer (Filled in by System)	Date	Request originator:	Extension: 5168
		08/20/10	Erik Voirin	MS: 219
Division/Section Approval		Date	NEPA Approval	
Business Office Approval		Date		
Directorate Approval		Date		

Requisition Header

Description (of entire requisition)
Fuji Differential Pressure Transmitters

Note to Approver
Reference Quote #Q925269 Also see non-competitive procurement form

Justification (To Approver)

Requisition Entry Defaults

Requester	Deliver-To-Location	Buyer Note (use attachments) (i.e., Previous PO)	
Erik Voirin	Lab F		
Suggested Vendors	Suggested Vendor Site	Suggested Vendor Contact	Suggested Vendors
Instrumart	PO Box 1073, 8 Leroy Road Williston, VT 05495	Matt Naik	Tele# 800-235-8367 ext. 239
Reference # / Need-By-Date	Project/Task/Expenditure Type and Expenditure Organization		Building Maintenance: Yes or No (Circle One)
09-15-2010	45A / 45A.20.16.2.11.3.1		FIMS #
Note to Receiver			Total of Requisition
PDT for CMS CO2 Cooling System			$5924.00

Requisition Lines

Line #	Line Type	PO Line Category	Description (Start with a Noun) (240 Characters Maximum, Enter Additional Description in Cell Below Line Item)	Quantity, Unit of Measure and Price		Project Information		Split Coding Qty's
1	GR	Differential Pressure Transmitter	**Fuji Part #FKCT33V5-AVCYY-BE** Fuji Electric Differential Pressure Transmitter/FM Flame-Proof or Explosion Proof / 1/4-18NPT Process Connection / 7/16-20UNF Oval Flange Screw / 1/2-14 NPT Conduit Connection / L Type Case / 1.25 to 125 inwc DP Range/-14 to 2300 PSI Static Pressure / 4-20mA Output / 316 SST Materials of Construction / Silicone Fill Fluid / Teflon Gasket / 304 stainless steel bolt/304 stainless steel nut	Quantity	2	Project	45A	
				Unit of Measure	each	Task	45A.20.16.2.11.3.1	
				Price per Unit	$1403.00	Exp. Type	Material purchase	
			UN Number Hazard Class	Extended Price	$2806.00	Exp. Org.	CMS	

Line #	Line Type	PO Line Category	Description (Start with a Noun) (240 Characters Maximum, Enter Additional Description in Cell Below Line Item)	Quantity, Unit of Measure and Price		Project Information		Split Coding Qty's
2	GR	Differential Pressure Transmitter	**Fuji Part #FKCT36V5-AVCYY-BE** Fuji Electric Differential Pressure Transmitter/FM Flame-Proof or Explosion Proof / 1/4-18NPT Process Connection / 7/16-20UNF Oval Flange Screw / 1/2-14 NPT Conduit Connection / L Type Case / 20 to 2000 inwc DP Range/-14 to 2300 PSI Static Pressure / 4-20mA Output / 316 SST Materials of Construction / Silicone Fill Fluid / Teflon Gasket / 304 stainless steel bolt/304 stainless steel nut UN Number Hazard Class	Quantity	2	Project	45A	
				Unit of Measure	each	Task	45A.20.16.2.11.3.1	
				Price per Unit	$1559.00	Exp. Type	Material purchase	
				Extended Price	$3118.00	Exp. Org.	CMS	

Fermilab

PURCHASE REQUISITION

Requisition

Requisition Number (Filled in by System)	Oracle Preparer (Filled in by System)	Date	Request originator:	Extension: 5168
		06/30/10	Erik Voirin	MS: 219
Division/Section Approval		Date	NEPA Approval	
Business Office Approval		Date		
Directorate Approval		Date		

Requisition Header

Description (of entire requisition)
Manifolds for instrumentation and flexible stainless steel hoses for piping versitility.

Note to Approver

Justification (To Approver)

Requisition Entry Defaults

Requester	Deliver-To-Location	Buyer Note (use attachments) (i.e., Previous PO)	
Erik Voirin	Lab F		
Suggested Vendors	Suggested Vendor Site	Suggested Vendor Contact	Suggested Vendors
Janco Process Control	368 West Liberty Street, Suite H; Wauconda IL 60084	Nick Patitsas	Telephone # 847-526-0800
Reference # / Need-By-Date: 08-031-2010	Project/Task/Expenditure Type and Expenditure Organization: 45A / 45A.20.16.2.11.3.1		Building Maintenance: Yes or No (Circle One) FIMS #
Note to Receiver: This is for CMS CO2 Cooling System			Total of Requisition: $1565.62

Requisition Lines

Line #	Line Type	PO Line Category	Description (Start with a Noun) (240 Characters Maximum, Enter Additional Description in Cell Below Line Item)	Quantity, Unit of Measure and Price		Project Information		Split Coding Qty's
1	GR	Inst. Manifold	Hy-Lok part #M3VDMTV-8N-316L 3 VALVE MANIFOLD Stainless Steel UN Number Hazard Class	Quantity	2	Project	45A	
				Unit of Measure	each	Task	45A.20.16.2.11.3.1	
				Price per Unit	$171.36	Exp. Type	Material purchase	
				Extended Price	$342.72	Exp. Org.	CMS	

Line #	Line Type	PO Line Category	Description (Start with a Noun) (240 Characters Maximum, Enter Additional Description in Cell Below Line Item)	Quantity, Unit of Measure and Price		Project Information		Split Coding Qty's
2	GR	Inst. Manifold	Hy-Lok part # M3VTV8N-316L 1/2 FNPT 3-VALVE MANIFOLD Stainless Steel UN Number Hazard Class	Quantity	2	Project	45A	
				Unit of Measure	each	Task	45A.20.16.2.11.3.1	
				Price per Unit	$167.20	Exp. Type	Material purchase	
				Extended Price	$334.40	Exp. Org.	CMS	

Line #	Line Type	PO Line Category	Description (Start with a Noun) (240 Characters Maximum, Enter Additional Description in Cell Below Line Item)	Quantity, Unit of Measure and Price		Project Information		Split Coding Qty's
3	GR	Inst. Valve.	Hy-Lok part # GV2TV-MF12N8N-S316 3/4 MNPT X 1/2 FNPT GAUGE 2 VALVE, V-TIP, S316 UN Number Hazard Class	Quantity	2	Project	45A	
				Unit of Measure	each	Task	45A.20.16.2.11.3.1	
				Price per Unit	$132.60	Exp. Type	Material purchase	
				Extended Price	$265.20	Exp. Org.	CMS	

Line #	Line Type	PO Line Category	Description (Start with a Noun) (240 Characters Maximum, Enter Additional Description in Cell Below Line Item)	Quantity, Unit of Measure and Price		Project Information		Split Coding Qty's
4	GR	Control Valve	PRESSUREFLEX AF8755 1-1/2": OVERALL LENGTH 60.0" PURGE ALL WELDS; BEVEL FITTINGS; POLISH ENDS. INLET/OUTLET: WELD T304 #10 PIPE END 1.50", LENGTH: 1.5" STANDARD PRESSURE TEST, CLEAN & BAG UN Number Hazard Class	Quantity	1	Project	45A	
				Unit of Measure	each	Task	45A.20.16.2.11.3.1	
				Price per Unit	$298.80	Exp. Type	Material purchase	
				Extended Price	$298.80	Exp. Org.	CMS	

Line #	Line Type	PO Line Category	Description (Start with a Noun) (240 Characters Maximum, Enter Additional Description in Cell Below Line Item)	Quantity, Unit of Measure and Price		Project Information		Split Coding Qty's
5	GR	Control Valve	PRESSUREFLEX AF8755 1-1/2": OVERALL LENGTH 60.0" PURGE ALL WELDS; BEVEL FITTINGS; POLISH ENDS. INLET: WELD T304 #10 PIPE END 1.50" LENGTH 1.5" OUTLET: WELD T304 #10 CONC. WELD REDUCER 1-1/2" X 1"; WELD T304 #10 PIPE END 1.0" LENGTH: 1.50" STANDARD PRESSURE TEST, CLEAN & BAG UN Number Hazard Class	Quantity	1	Project	45A	
				Unit of Measure	each	Task	45A.20.16.2.11.3.1	
				Price per Unit	$324.50	Exp. Type	Material purchase	
				Extended Price	$324.50	Exp. Org.	CMS	

Fermilab

PURCHASE REQUISITION

Requisition

Requisition Number (Filled in by System)	Oracle Preparer (Filled in by System)	Date 07/15/10	Request originator: Erik Voirin	Extension: 5168 MS: 219
Division/Section Approval		Date	NEPA Approval	
Business Office Approval		Date		
Directorate Approval		Date		

Requisition Header

Description (of entire requisition)
Parts for pressure testing system for NOvA PVC modules

Note to Approver

Justification (To Approver)

Requisition Entry Defaults

Requester	Deliver-To-Location	Buyer Note (use attachments) (i.e., Previous PO)	
Erik Voirin	Lab F		
Suggested Vendors: McMaster-Carr	Suggested Vendor Site: 200 Aurora Industrial Pkwy. Aurora, OH 44202-8087	Suggested Vendor Contact	Suggested Vendors: Telephone #(330) 995-5500
Reference #	Need-By-Date: 08-15-2010	Project/Task/Expenditure Type and Expenditure Organization: ///PPD-425 NOVA 1.8.9.5 NOvA Assembly RD///	Building Maintenance: Yes or No (Circle One) FIMS #
Note to Receiver: Parts for pressure testing system for NOvA PVC modules			Total of Requisition: $376.34

Requisition Lines

Line #	Line Type	PO Line Category	Description (Start with a Noun) (240 Characters Maximum, Enter Additional Description in Cell Below Line Item)	Quantity, Unit of Measure and Price		Project Information		Split Coding Qty's
1	GR	Cylinder Regulator	7897A65 Gas Pressure Regulator Std Duty, 1-Stage, Argon, 0-100 PSI, Cga #580 *In stock* at $102.35 Each UN Number Hazard Class	Quantity	1	Project	425	
				Unit of Measure	each	Task	1.8.9.5	
				Price per Unit	$102.35	Exp. Type	Material purchase	
				Extended Price	$102.35	Exp. Org.	NOvA	

Line #	Line Type	PO Line Category	Description (Start with a Noun) (240 Characters Maximum, Enter Additional Description in Cell Below Line Item)	Quantity, Unit of Measure and Price		Project Information		Split Coding Qty's
2	GR	Thread adaptor	7919A51 Welding Hose Fitting Brass Adapter, 1/4" NPT Male to 9/16"-18 Female Rh ***In stock*** at $8.79 Each UN Number Hazard Class	Quantity	1	Project	425	
				Unit of Measure	each	Task	1.4.6.5	
				Price per Unit	$8.79	Exp. Type	Material purchase	
				Extended Price	$8.79	Exp. Org.	NOvA	
Line #	Line Type	PO Line Category	Description (Start with a Noun) (240 Characters Maximum, Enter Additional Description in Cell Below Line Item)	Quantity, Unit of Measure and Price		Project Information		Split Coding Qty's
3	GR	Tube fitting	5520K174 Solder-Joint Copper Tube Fitting for Water Female Reducing Adapter for 1/8" Tube Sz, 1/4" NPT ***In stock*** at $3.56 Each UN Number Hazard Class	Quantity	1	Project	425	
				Unit of Measure	Each	Task	1.4.6.5	
				Price per Unit	$3.56	Exp. Type	Material purchase	
				Extended Price	$3.56	Exp. Org.	NOvA	
Line #	Line Type	PO Line Category	Description (Start with a Noun) (240 Characters Maximum, Enter Additional Description in Cell Below Line Item)	Quantity, Unit of Measure and Price		Project Information		Split Coding Qty's
4	GR	Tube fitting	5520K121 Solder-Joint Copper Tube Fitting for Water Male Reducing Adapter for 1/8" Tube Size, 1/4" NPT ***In stock*** at $4.26 Each UN Number Hazard Class	Quantity	1	Project	425	
				Unit of Measure	Each	Task	1.4.6.5	
				Price per Unit	$4.26	Exp. Type	Material purchase	
				Extended Price	$4.26	Exp. Org.	NOvA	
Line #	Line Type	PO Line Category	Description (Start with a Noun) (240 Characters Maximum, Enter Additional Description in Cell Below Line Item)	Quantity, Unit of Measure and Price		Project Information		Split Coding Qty's
5	GR	Pressure regulator	1888K1 Aluminum Body HI-Flow Precision Air Regulator 1/4" Pipe, 80 Maximum SCFM @ 100 PSI $71.96 Each UN Number Hazard Class	Quantity	1	Project	425	
				Unit of Measure	each	Task	1.4.6.5	
				Price per Unit	$71.96	Exp. Type	Material purchase	
				Extended Price	$71.96	Exp. Org.	NOvA	

Line #	Line Type	PO Line Category	Description (Start with a Noun) (240 Characters Maximum, Enter Additional Description in Cell Below Line Item)	Quantity, Unit of Measure and Price		Project Information		Split Coding Qty's
6	GR	Pressure regulator mounting bracket	1888K5 Mounting Bracket for Aluminum Body HI-Flow Precision Air Regulator ***In stock*** at $8.95 Each UN Number Hazard Class	Quantity	1	Project	425	
				Unit of Measure	Each	Task	1.4.6.5	
				Price per Unit	$8.95	Exp. Type	Material purchase	
				Extended Price	$8.95	Exp. Org.	NOvA	
Line #	Line Type	PO Line Category	Description (Start with a Noun) (240 Characters Maximum, Enter Additional Description in Cell Below Line Item)	Quantity, Unit of Measure and Price		Project Information		Split Coding Qty's
7	GR	Hose fitting	5357K34 Aluminum Barbed Hose Fitting Std-Wall Adapter, 5/16" Hose ID X 1/4" NPT Male Pipe ***In stock*** at $2.86 Each UN Number Hazard Class	Quantity	1	Project	425	
				Unit of Measure	Each	Task	1.4.6.5	
				Price per Unit	$2.86	Exp. Type	Material purchase	
				Extended Price	$2.86	Exp. Org.	NOvA	
Line #	Line Type	PO Line Category	Description (Start with a Noun) (240 Characters Maximum, Enter Additional Description in Cell Below Line Item)	Quantity, Unit of Measure and Price		Project Information		Split Coding Qty's
8	GR	PVC tube	5233K59 Masterkleer PVC Tubing 5/16" ID, 7/16" OD, 1/16" Wall Thickness ***In stock*** Quantity — Per Ft. 1-99 Ft. — $0.25 UN Number Hazard Class	Quantity	25	Project	425	
				Unit of Measure	Foot	Task	1.4.6.5	
				Price per Unit	$0.25	Exp. Type	Material purchase	
				Extended Price	$6.25	Exp. Org.	NOvA	
Line #	Line Type	PO Line Category	Description (Start with a Noun) (240 Characters Maximum, Enter Additional Description in Cell Below Line Item)	Quantity, Unit of Measure and Price		Project Information		Split Coding Qty's
9	GR	Hose fitting	5346K26 Brass Barbed Hose Fitting Adapter for 5/16" Hose ID X 3/8" NPTF Male Pipe ***In stock*** at $12.72 per Pack UN Number Hazard Class	Quantity	1	Project	425	
				Unit of Measure	Pack	Task	1.4.6.5	
				Price per Unit	$12.72	Exp. Type	Material purchase	
				Extended Price	$12.72	Exp. Org.	NOvA	

Line #	Line Type	PO Line Category	Description (Start with a Noun) (240 Characters Maximum, Enter Additional Description in Cell Below Line Item)	Quantity, Unit of Measure and Price		Project Information		Split Coding Qty's
10	GR	Pipe fitting	4429K226 Low-Pressure Brass Threaded Pipe Fitting 1/2" X 1/4" X 1/2" Pipe Size, Reducing Tee ***In stock*** at $9.01 Each UN Number Hazard Class	Quantity	1	Project	425	
				Unit of Measure	Each	Task	1.4.6.5	
				Price per Unit	$9.01	Exp. Type	Material purchase	
				Extended Price	$9.01	Exp. Org.	NOvA	
Line #	Line Type	PO Line Category	Description (Start with a Noun) (240 Characters Maximum, Enter Additional Description in Cell Below Line Item)	Quantity, Unit of Measure and Price		Project Information		Split Coding Qty's
11	GR	Threaded pipe	9176K133 Std-Wall Chrm-Pltd Brass Threaded Pipe Nipple 3/8" Pipe Size X 2" L, 13/32" Thread Length, Sch 40 ***In stock*** at $4.47 Each UN Number Hazard Class	Quantity	1	Project	425	
				Unit of Measure	Each	Task	1.4.6.5	
				Price per Unit	$4.47	Exp. Type	Material purchase	
				Extended Price	$4.47	Exp. Org.	NOvA	
Line #	Line Type	PO Line Category	Description (Start with a Noun) (240 Characters Maximum, Enter Additional Description in Cell Below Line Item)	Quantity, Unit of Measure and Price		Project Information		Split Coding Qty's
12	GR	Ball valve	47865K22 Brass Ball Valve 3/8" NPT Female Connections ***In stock*** at $7.62 Each UN Number Hazard Class	Quantity	1	Project	425	
				Unit of Measure	Each	Task	1.4.6.5	
				Price per Unit	$7.62	Exp. Type	Material purchase	
				Extended Price	$7.62	Exp. Org.	NOvA	
Line #	Line Type	PO Line Category	Description (Start with a Noun) (240 Characters Maximum, Enter Additional Description in Cell Below Line Item)	Quantity, Unit of Measure and Price		Project Information		Split Coding Qty's
13	GR	Hose fitting	5346K65 Brass Barbed Hose Fitting Adapter for 5/8" Hose ID X 3/8" NPTF Male Pipe ***In stock*** at $8.49 per Pack UN Number Hazard Class	Quantity	1	Project	425	
				Unit of Measure	Each	Task	1.4.6.5	
				Price per Unit	$8.49	Exp. Type	Material purchase	
				Extended Price	$8.49	Exp. Org.	NOvA	

Line #	Line Type	PO Line Category	Description (Start with a Noun) (240 Characters Maximum, Enter Additional Description in Cell Below Line Item)	Quantity, Unit of Measure and Price		Project Information		Split Coding Qty's
14	GR	PVC tube	5233K87 Masterkleer PVC Tubing 5/8" ID, 13/16" OD, 3/32" Wall Thickness ***In stock*** Quantity — Per Ft. 1-99 Ft. — $0.76 UN Number Hazard Class	Quantity	25	Project	425	
				Unit of Measure	Foot	Task	1.4.6.5	
				Price per Unit	$0.76	Exp. Type	Material purchase	
				Extended Price	$19.00	Exp. Org.	NOvA	
Line #	**Line Type**	**PO Line Category**	**Description (Start with a Noun) (240 Characters Maximum, Enter Additional Description in Cell Below Line Item)**	**Quantity, Unit of Measure and Price**		**Project Information**		**Split Coding Qty's**
15	GR	Hose fitting	91355K53 Brass Barbed Hose Fitting Tee for 5/8" Hose ID $7.24 per Pack. UN Number Hazard Class	Quantity	1	Project	425	
				Unit of Measure	Pack	Task	1.4.6.5	
				Price per Unit	$7.24	Exp. Type	Material purchase	
				Extended Price	$7.24	Exp. Org.	NOvA	
Line #	**Line Type**	**PO Line Category**	**Description (Start with a Noun) (240 Characters Maximum, Enter Additional Description in Cell Below Line Item)**	**Quantity, Unit of Measure and Price**		**Project Information**		**Split Coding Qty's**
16	GR	Hose clamp	7329K14 Constant-Tension Spring Band Hose/Tube Clamp for 25/32" Hose OD ***In stock*** at $5.64 per Pack UN Number Hazard Class	Quantity	1	Project	425	
				Unit of Measure	Pack	Task	1.4.6.5	
				Price per Unit	$5.64	Exp. Type	Material purchase	
				Extended Price	$5.64	Exp. Org.	NOvA	
Line #	**Line Type**	**PO Line Category**	**Description (Start with a Noun) (240 Characters Maximum, Enter Additional Description in Cell Below Line Item)**	**Quantity, Unit of Measure and Price**		**Project Information**		**Split Coding Qty's**
17	GR	Hose fitting	9431K12 Bronze Barbed Hose Fitting Adapter for 5/8" Hose ID X 1/2" NPT Male Pipe ***In stock*** at $6.44 Each UN Number Hazard Class	Quantity	1	Project	425	
				Unit of Measure	Each	Task	1.4.6.5	
				Price per Unit	$6.44	Exp. Type	Material purchase	
				Extended Price	$6.44	Exp. Org.	NOvA	

Line #	Line Type	PO Line Category	Description (Start with a Noun) (240 Characters Maximum, Enter Additional Description in Cell Below Line Item)	Quantity, Unit of Measure and Price		Project Information		Split Coding Qty's
18	GR	Ball valve	47865K23 Brass Ball Valve 1/2" NPT Female Connections ***In stock*** at $8.86 Each UN Number Hazard Class	Quantity	1	Project	425	
				Unit of Measure	Each	Task	1.4.6.5	
				Price per Unit	$8.86	Exp. Type	Material purchase	
				Extended Price	$8.86	Exp. Org.	NOvA	
Line #	Line Type	PO Line Category	Description (Start with a Noun) (240 Characters Maximum, Enter Additional Description in Cell Below Line Item)	Quantity, Unit of Measure and Price		Project Information		Split Coding Qty's
19	GR	Hose clamp	7329K16 Constant-Tension Spring Band Hose/Tube Clamp for 1-1/16" Hose OD ***In stock*** at $7.56 per Pack UN Number Hazard Class	Quantity	1	Project	425	
				Unit of Measure	Pack	Task	1.4.6.5	
				Price per Unit	$7.56	Exp. Type	Material purchase	
				Extended Price	$7.56	Exp. Org.	NOvA	
Line #	Line Type	PO Line Category	Description (Start with a Noun) (240 Characters Maximum, Enter Additional Description in Cell Below Line Item)	Quantity, Unit of Measure and Price		Project Information		Split Coding Qty's
20	GR	PVC tube	5233K72 Masterkleer PVC Tubing 1" ID, 1-1/4" OD, 1/8" Wall Thickness ***In stock*** Quantity — Per Ft. 1-49 Ft. — $1.18 UN Number Hazard Class	Quantity	25	Project	425	
				Unit of Measure	Foot	Task	1.4.6.5	
				Price per Unit	$1.18	Exp. Type	Material purchase	
				Extended Price	$29.50	Exp. Org.	NOvA	
Line #	Line Type	PO Line Category	Description (Start with a Noun) (240 Characters Maximum, Enter Additional Description in Cell Below Line Item)	Quantity, Unit of Measure and Price		Project Information		Split Coding Qty's
21	GR	Hose fitting	5346K69 Brass Barbed Hose Fitting Adapter for 1" Hose ID X 3/4" NPTF Male Pipe ***In stock*** at $8.31 per Pack UN Number Hazard Class	Quantity	1	Project	425	
				Unit of Measure	Pack	Task	1.4.6.5	
				Price per Unit	$8.31	Exp. Type	Material purchase	
				Extended Price	$8.31	Exp. Org.	NOvA	

Line #	Line Type	PO Line Category	Description (Start with a Noun) (240 Characters Maximum, Enter Additional Description in Cell Below Line Item)	Quantity, Unit of Measure and Price		Project Information	
22	GR	Ball valve	47865K24 Brass Ball Valve 3/4" NPT Female Connections ***In stock*** at $11.90 Each UN Number Hazard Class	Quantity	1	Project	425
				Unit of Measure	Each	Task	1.4.6.5
				Price per Unit	$11.90	Exp. Type	Material purchase
				Extended Price	$11.90	Exp. Org.	NOvA
Line #	Line Type	PO Line Category	Description (Start with a Noun) (240 Characters Maximum, Enter Additional Description in Cell Below Line Item)	Quantity, Unit of Measure and Price		Project Information	
23	GR	Worm-gear clamp	5407K57 Worm-Drive Hose & Tube Clamp W/Nonslip Screw 3/8" to 7/8" Clamp Dia Range, 9/16" Band ***In stock*** at $10.30 per Pack UN Number Hazard Class	Quantity	1	Project	425
				Unit of Measure	Pack	Task	1.4.6.5
				Price per Unit	$10.30	Exp. Type	Material purchase
				Extended Price	$10.30	Exp. Org.	NOvA
Line #	Line Type	PO Line Category	Description (Start with a Noun) (240 Characters Maximum, Enter Additional Description in Cell Below Line Item)	Quantity, Unit of Measure and Price		Project Information	
24	GR	Worm-gear clamp	5407K62 Worm-Drive Hose & Tube Clamp W/Nonslip Screw 11/16" to 1-1/2" Clamp Dia Range, 9/16" Band Width ***In stock*** at $10.53 per Pack UN Number Hazard Class	Quantity	1	Project	425
				Unit of Measure	Pack	Task	1.4.6.5
				Price per Unit	$10.30	Exp. Type	Material purchase
				Extended Price	$10.30	Exp. Org.	NOvA

Fermilab

PURCHASE REQUISITION

Requisition

Requisition Number (Filled in by System)	Oracle Preparer (Filled in by System)	Date	Request originator:	Extension: 5168
		09/07/10	Erik Voirin	MS: 219
Division/Section Approval		Date	NEPA Approval	
Business Office Approval		Date		
Directorate Approval		Date		

Requisition Header

Description (of entire requisition)
Orifice Flange for CMS CO2 Test Stand Flowmeter

Note to Approver

Justification (To Approver)

Requisition Entry Defaults

Requester	Deliver-To-Location	Buyer Note (use attachments) (i.e., Previous PO)	
Erik Voirin	Lab F		
Suggested Vendors	Suggested Vendor Site	Suggested Vendor Contact	Suggested Vendors
Specialty Flange & Fitting, Inc	649 Lebanon Avenue Williamstown, NJ 08094		Phone #(856) 728-8530
Reference # / Need-By-Date: 9/30/2010	Project/Task/Expenditure Type and Expenditure Organization: 45A / 45A.20.16.2.11.3.1		Building Maintenance: No / FIMS #

Note to Receiver

Company does not accept credit cards – Fax# (856) 728-1304 – see line 3

Total of Requisition: $443.00

Requisition Lines

Line #	Line Type	PO Line Category	Description (Start with a Noun) (240 Characters Maximum, Enter Additional Description in Cell Below Line Item)	Quantity, Unit of Measure and Price		Project Information		Split Coding Qty's
1	GR	Pipe Fittings	Orifice Flanges - 1" 600# 304 Stainless Steel. Slip-on raised face ½"NPT Taps Includes SS Bolts gaskets and nuts UN Number Hazard Class	Quantity	1	Project	45A	
				Unit of Measure	pair	Task	45A.20.16.2.11.3.1	
				Price per Unit	$ 298.00	Exp. Type	Material purchase	
				Extended Price	$298.00	Exp. Org.	CMS	

Requisition Lines

Line #	Line Type	PO Line Category	Description (Start with a Noun) (240 Characters Maximum, Enter Additional Description in Cell Below Line Item)	Quantity, Unit of Measure and Price		Project Information		Split Coding Qty's
2	GR	Pipe Fittings	Orifice Plate For above 1” 600# flange 304 Stainless Steel Center bored with 0.290” orifice UN Number Hazard Class	Quantity	1	Project	45A	
				Unit of Measure	each	Task	45A.20.16.2.11.3.1	
				Price per Unit	$ 70	Exp. Type	Material purchase	
				Extended Price	$70	Exp. Org.	CMS	

Requisition Lines

Line #	Line Type	PO Line Category	Description (Start with a Noun) (240 Characters Maximum, Enter Additional Description in Cell Below Line Item)	Quantity, Unit of Measure and Price		Project Information		Split Coding Qty's
3	GR	Pipe Fittings	Orifice Plate For 1.5” 600# flange 304 Stainless Steel Furnished Blank (no orifice hole) Please Provide gaskets for orifice plate, If additional charge is necessary, add to total price. UN Number Hazard Class	Quantity	1	Project	45A	
				Unit of Measure	each	Task	45A.20.16.2.11.3.1	
				Price per Unit	$ 75	Exp. Type	Material purchase	
				Extended Price	$75	Exp. Org.	CMS	

Fermilab

PURCHASE REQUISITION

Requisition

Requisition Number (Filled in by System)	Oracle Preparer (Filled in by System)	Date	Request originator:	Extension: 5168
		09/02/10	Erik Voirin	MS: 219
Division/Section Approval		Date	NEPA Approval	
Business Office Approval		Date		
Directorate Approval		Date		

Requisition Header

Description (of entire requisition)
Pipe Fittings for CMS CO2 Test Stand Piping

Note to Approver

Justification (To Approver)

Requisition Entry Defaults

Requester		Deliver-To-Location	Buyer Note (use attachments) (i.e., Previous PO)	
Erik Voirin		Lab F		
Suggested Vendors		Suggested Vendor Site	Suggested Vendor Contact	Suggested Vendors
McMaster-Carr		200 Aurora Industrial Pkwy. Aurora, OH 44202-8087		Telephone #(330) 995-5500
Reference #	Need-By-Date	Project/Task/Expenditure Type and Expenditure Organization		Building Maintenance: No
	9/21/2010	45A / 45A.20.16.2.11.3.1		FIMS #
Note to Receiver				Total of Requisition
				$2499.23

Requisition Lines

Line #	Line Type	PO Line Category	Description (Start with a Noun) (240 Characters Maximum, Enter Additional Description in Cell Below Line Item)	Quantity, Unit of Measure and Price		Project Information		Split Coding Qty's
1	GR	Pipe Fittings	45735K255 Thin-Wall 304/304L SS Butt-Weld Pipe Fitting Unthreaded, 1-1/2" Pipe Size, Tee, Schedule 10 In stock at $18.13 Each UN Number Hazard Class	Quantity	4	Project	45A	
				Unit of Measure	each	Task	45A.20.16.2.11.3.1	
				Price per Unit	$ 18.13	Exp. Type	Material purchase	
				Extended Price	$72.52	Exp. Org.	CMS	

Requisition Lines

Line #	Line Type	PO Line Category	Description (Start with a Noun) (240 Characters Maximum, Enter Additional Description in Cell Below Line Item)	Quantity, Unit of Measure and Price		Project Information		Split Coding Qty's
2	GR	Pipe Fittings	45735K253 Thin-Wall 304/304L SS Butt-Weld Pipe Fitting Unthreaded, 1" Pipe Size, Tee, Schedule 10 In stock at $18.13 Each UN Number Hazard Class	Quantity	6	Project	45A	
				Unit of Measure	each	Task	45A.20.16.2.11.3.1	
				Price per Unit	$ 18.13	Exp. Type	Material purchase	
				Extended Price	$108.78	Exp. Org.	CMS	

Requisition Lines

Line #	Line Type	PO Line Category	Description (Start with a Noun) (240 Characters Maximum, Enter Additional Description in Cell Below Line Item)	Quantity, Unit of Measure and Price		Project Information		Split Coding Qty's
3	GR	Pipe Fittings	44965K458 Unthreaded HI-Pressure SS Sckt-Weld Fitting 304 SS, 1-1/2" Pipe Size, Coupling In stock at $31.65 Each UN Number Hazard Class	Quantity	2	Project	45A	
				Unit of Measure	each	Task	45A.20.16.2.11.3.1	
				Price per Unit	$ 31.65	Exp. Type	Material purchase	
				Extended Price	$63.30	Exp. Org.	CMS	

Requisition Lines

Line #	Line Type	PO Line Category	Description (Start with a Noun) (240 Characters Maximum, Enter Additional Description in Cell Below Line Item)	Quantity, Unit of Measure and Price		Project Information		Split Coding Qty's
4	GR	Pipe Fittings	44965K456 Unthreaded HI-Pressure SS Sckt-Weld Fitting 304 SS, 1" Pipe Size, Coupling In stock at $15.50 Each UN Number Hazard Class	Quantity	1	Project	45A	
				Unit of Measure	each	Task	45A.20.16.2.11.3.1	
				Price per Unit	$ 15.50	Exp. Type	Material purchase	
				Extended Price	$15.50	Exp. Org.	CMS	

Requisition Lines

Line #	Line Type	PO Line Category	Description (Start with a Noun) (240 Characters Maximum, Enter Additional Description in Cell Below Line Item)	Quantity, Unit of Measure and Price		Project Information		Split Coding Qty's
5	GR	Pipe Fittings	45735K321 Thin-Wall 304/304L SS Butt-Weld Pipe Fitting Unthreaded, 1" 90 Degree Short Radius Elbow, Sch 10 In stock at $37.07 Each UN Number Hazard Class	Quantity	16	Project	45A	
				Unit of Measure	each	Task	45A.20.16.2.11.3.1	
				Price per Unit	$ 37.07	Exp. Type	Material purchase	
				Extended Price	$593.12	Exp. Org.	CMS	

Requisition Lines

Line #	Line Type	PO Line Category	Description (Start with a Noun) (240 Characters Maximum, Enter Additional Description in Cell Below Line Item)	Quantity, Unit of Measure and Price		Project Information		Split Coding Qty's
6	GR	Pipe Fittings	45735K323 Thin-Wall 304/304L SS Butt-Weld Pipe Fitting Unthreaded, 1-1/2" 90 Deg Short Radius Elbow, Sch 10 In stock at $39.49 Each UN Number Hazard Class	Quantity	7	Project	45A	
				Unit of Measure	each	Task	45A.20.16.2.11.3.1	
				Price per Unit	$ 39.49	Exp. Type	Material purchase	
				Extended Price	$276.43	Exp. Org.	CMS	

Requisition Lines

Line #	Line Type	PO Line Category	Description (Start with a Noun) (240 Characters Maximum, Enter Additional Description in Cell Below Line Item)	Quantity, Unit of Measure and Price		Project Information		Split Coding Qty's
7	GR	Pipe Fittings	45735K211 Thin-Wall 304/304L SS Butt-Weld Pipe Fitting Unthreaded, 1/2" 90 Deg Long Radius Elbow, Sch 10 In stock at $5.04 Each UN Number Hazard Class	Quantity	5	Project	45A	
				Unit of Measure	each	Task	45A.20.16.2.11.3.1	
				Price per Unit	$ 5.04	Exp. Type	Material purchase	
				Extended Price	$25.20	Exp. Org.	CMS	

Requisition Lines

Line #	Line Type	PO Line Category	Description (Start with a Noun) (240 Characters Maximum, Enter Additional Description in Cell Below Line Item)	Quantity, Unit of Measure and Price		Project Information		Split Coding Qty's
8	GR	Pipe Fittings	45735K231 Thin-Wall 304/304L SS Butt-Weld Pipe Fitting Unthreaded, 1/2" 45 Degree Elbow, Schedule 10 In stock at $6.45 Each UN Number Hazard Class	Quantity	1	Project	45A	
				Unit of Measure	each	Task	45A.20.16.2.11.3.1	
				Price per Unit	$ 6.45	Exp. Type	Material purchase	
				Extended Price	$6.45	Exp. Org.	CMS	

Requisition Lines

Line #	Line Type	PO Line Category	Description (Start with a Noun) (240 Characters Maximum, Enter Additional Description in Cell Below Line Item)	Quantity, Unit of Measure and Price		Project Information		Split Coding Qty's
9	GR	Pipe Fittings	4565T332 HI-Pressure 304/304L SS Weld-on Pipe Fitting Threaded, 1/2" Outlet, Fits 3/4" to 36" Pipe Size UN Number Hazard Class	Quantity	2	Project	45A	
				Unit of Measure	each	Task	45A.20.16.2.11.3.1	
				Price per Unit	$ 34.50	Exp. Type	Material purchase	
				Extended Price	$69.00	Exp. Org.	CMS	

Requisition Lines

Line #	Line Type	PO Line Category	Description (Start with a Noun) (240 Characters Maximum, Enter Additional Description in Cell Below Line Item)	Quantity, Unit of Measure and Price		Project Information		Split Coding Qty's
10	GR	Pipe Fittings	46755K14 Thk-Wall 304/304L SS Thrd Seamless Nipple 1/2" Pipe X 1-1/8" Length, Fully Threaded In stock at $5.73 Each UN Number Hazard Class	Quantity	2	Project	45A	
				Unit of Measure	each	Task	45A.20.16.2.11.3.1	
				Price per Unit	$ 5.73	Exp. Type	Material purchase	
				Extended Price	$11.46	Exp. Org.	CMS	

Requisition Lines

Line #	Line Type	PO Line Category	Description (Start with a Noun) (240 Characters Maximum, Enter Additional Description in Cell Below Line Item)	Quantity, Unit of Measure and Price		Project Information		Split Coding Qty's
11	GR	Pipe Fittings	4443K724 High-Pressure 316 SS Threaded Pipe Fitting 1/2" Pipe Size, Hex Head Plug, 3000 PSI In stock at $4.02 Each UN Number Hazard Class	Quantity	2	Project	45A	
				Unit of Measure	each	Task	45A.20.16.2.11.3.1	
				Price per Unit	$ 4.02	Exp. Type	Material purchase	
				Extended Price	$8.04	Exp. Org.	CMS	

Requisition Lines

Line #	Line Type	PO Line Category	Description (Start with a Noun) (240 Characters Maximum, Enter Additional Description in Cell Below Line Item)	Quantity, Unit of Measure and Price		Project Information		Split Coding Qty's
12	GR	Pipe Fittings	45735K418 Thin-Wall 304/304L SS Butt-Weld Pipe Fitting Unthrd, 1-1/2" X 1" Pipe Size, Reducing Cplg, Sch 10 In stock at $8.46 Each UN Number Hazard Class	Quantity	3	Project	45A	
				Unit of Measure	each	Task	45A.20.16.2.11.3.1	
				Price per Unit	$ 8.46	Exp. Type	Material purchase	
				Extended Price	$25.38	Exp. Org.	CMS	

Requisition Lines

Line #	Line Type	PO Line Category	Description (Start with a Noun) (240 Characters Maximum, Enter Additional Description in Cell Below Line Item)	Quantity, Unit of Measure and Price		Project Information		Split Coding Qty's
13	GR	Pipe Fittings	45735K411 Thin-Wall 304/304L SS Butt-Weld Pipe Fitting Unthrd, 3/4" X 1/2" Pipe Size, Reducing Cplg, Sch 10 In stock at $10.88 Each UN Number Hazard Class	Quantity	2	Project	45A	
				Unit of Measure	each	Task	45A.20.16.2.11.3.1	
				Price per Unit	$ 10.88	Exp. Type	Material purchase	
				Extended Price	$21.76	Exp. Org.	CMS	

Requisition Lines

Line #	Line Type	PO Line Category	Description (Start with a Noun) (240 Characters Maximum, Enter Additional Description in Cell Below Line Item)	Quantity, Unit of Measure and Price		Project Information		Split Coding Qty's
14	GR	Pipe Fittings	45735K413 Thin-Wall 304/304L SS Butt-Weld Pipe Fitting Unthrd, 1" X 3/4" Pipe Size, Reducing Cplg, Sch 10 UN Number Hazard Class	Quantity	3	Project	45A	
				Unit of Measure	each	Task	45A.20.16.2.11.3.1	
				Price per Unit	$ 13.30	Exp. Type	Material purchase	
				Extended Price	$39.90	Exp. Org.	CMS	

Requisition Lines

Line #	Line Type	PO Line Category	Description (Start with a Noun) (240 Characters Maximum, Enter Additional Description in Cell Below Line Item)	Quantity, Unit of Measure and Price		Project Information		Split Coding Qty's
15	GR	Pipe Fittings	4475K64 Thick-Wall 316/316L SS Thrd Seamless Nipple 1/2" Pipe Sz, 3/4" OD, 5" L, 13/16" Thread Length In stock at $20.34 Each UN Number Hazard Class	Quantity	1	Project	45A	
				Unit of Measure	each	Task	45A.20.16.2.11.3.1	
				Price per Unit	$ 20.34	Exp. Type	Material purchase	
				Extended Price	$20.34	Exp. Org.	CMS	

Requisition Lines

Line #	Line Type	PO Line Category	Description (Start with a Noun) (240 Characters Maximum, Enter Additional Description in Cell Below Line Item)	Quantity, Unit of Measure and Price		Project Information		Split Coding Qty's
16	GR	Pipe Fittings	51205K202 Extreme-Pressure 316 SS Threaded Pipe Fitting 3/4" X 1/2" Pipe Size, Hex Nipple, 6600 Max PSI In stock at $23.06 Each UN Number Hazard Class	Quantity	1	Project	45A	
				Unit of Measure	each	Task	45A.20.16.2.11.3.1	
				Price per Unit	$ 23.06	Exp. Type	Material purchase	
				Extended Price	$23.06	Exp. Org.	CMS	

Requisition Lines

Line #	Line Type	PO Line Category	Description (Start with a Noun) (240 Characters Maximum, Enter Additional Description in Cell Below Line Item)	Quantity, Unit of Measure and Price		Project Information		Split Coding Qty's
17	GR	Pipe Fittings	48805K911 Precision Threaded Type 316 SS Pipe Fitting 1/2" X 1/2" Pipe, 1-7/8" Lg, Hex Nipple, 6600 PSI UN Number Hazard Class	Quantity	1	Project	45A	
				Unit of Measure	each	Task	45A.20.16.2.11.3.1	
				Price per Unit	$ 14.87	Exp. Type	Material purchase	
				Extended Price	$14.87	Exp. Org.	CMS	

Requisition Lines

Line #	Line Type	PO Line Category	Description (Start with a Noun) (240 Characters Maximum, Enter Additional Description in Cell Below Line Item)	Quantity, Unit of Measure and Price		Project Information		Split Coding Qty's
18	GR	Pipe Fittings	4565T312 HI-Pressure 304/304L SS Weld-on Pipe Fitting Threaded, 1/4" Outlet, Fits 1/2" to 36" Pipe Size UN Number Hazard Class	Quantity	6	Project	45A	
				Unit of Measure	each	Task	45A.20.16.2.11.3.1	
				Price per Unit	$ 26.22	Exp. Type	Material purchase	
				Extended Price	$157.32	Exp. Org.	CMS	

Requisition Lines

Line #	Line Type	PO Line Category	Description (Start with a Noun) (240 Characters Maximum, Enter Additional Description in Cell Below Line Item)	Quantity, Unit of Measure and Price		Project Information		Split Coding Qty's
19	GR	Pipe Fittings	4565T371 HI-Pressure 304/304L SS Weld-on Pipe Fitting Threaded, 1-1/2" Outlet, Fits 1-1/2" Pipe Size UN Number Hazard Class	Quantity	2	Project	45A	
				Unit of Measure	each	Task	45A.20.16.2.11.3.1	
				Price per Unit	$ 91.83	Exp. Type	Material purchase	
				Extended Price	$183.66	Exp. Org.	CMS	

Requisition Lines

Line #	Line Type	PO Line Category	Description (Start with a Noun) (240 Characters Maximum, Enter Additional Description in Cell Below Line Item)	Quantity, Unit of Measure and Price		Project Information		Split Coding Qty's
20	GR	Pipe Fittings	4565T351 HI-Pressure 304/304L SS Weld-on Pipe Fitting Threaded, 1" Outlet, Fits 1" Pipe Size UN Number Hazard Class	Quantity	7	Project	45A	
				Unit of Measure	each	Task	45A.20.16.2.11.3.1	
				Price per Unit	$ 54.24	Exp. Type	Material purchase	
				Extended Price	$379.68	Exp. Org.	CMS	

Requisition Lines

Line #	Line Type	PO Line Category	Description (Start with a Noun) (240 Characters Maximum, Enter Additional Description in Cell Below Line Item)	Quantity, Unit of Measure and Price		Project Information		Split Coding Qty's
21	GR	Pipe Fittings	4565T331 HI-Pressure 304/304L SS Weld-on Pipe Fitting Threaded, 1/2" Outlet, Fits 1/2" Pipe Size UN Number Hazard Class	Quantity	1	Project	45A	
				Unit of Measure	each	Task	45A.20.16.2.11.3.1	
				Price per Unit	$ 34.50	Exp. Type	Material purchase	
				Extended Price	$34.50	Exp. Org.	CMS	

Requisition Lines

Line #	Line Type	PO Line Category	Description (Start with a Noun) (240 Characters Maximum, Enter Additional Description in Cell Below Line Item)	Quantity, Unit of Measure and Price		Project Information		Split Coding Qty's
22	GR	Pipe Fittings	4565T352 HI-Pressure 304/304L SS Weld-on Pipe Fitting Threaded, 1" Outlet, Fits 1-1/4" to 2-1/2" Pipe Size In stock at $54.24 UN Number Hazard Class	Quantity	1	Project	45A	
				Unit of Measure	each	Task	45A.20.16.2.11.3.1	
				Price per Unit	$ 54.24	Exp. Type	Material purchase	
				Extended Price	$54.24	Exp. Org.	CMS	

Requisition Lines

Line #	Line Type	PO Line Category	Description (Start with a Noun) (240 Characters Maximum, Enter Additional Description in Cell Below Line Item)	Quantity, Unit of Measure and Price		Project Information		Split Coding Qty's
23	GR	Pipe Fittings	4443K752 High-Pressure 316 SS Threaded Pipe Fitting 1/2" Male X 1/4" Female NPT, Hex Bushing, 3000 PSI UN Number Hazard Class	Quantity	1	Project	45A	
				Unit of Measure	each	Task	45A.20.16.2.11.3.1	
				Price per Unit	$ 5.05	Exp. Type	Material purchase	
				Extended Price	$5.05	Exp. Org.	CMS	

Requisition Lines

Line #	Line Type	PO Line Category	Description (Start with a Noun) (240 Characters Maximum, Enter Additional Description in Cell Below Line Item)	Quantity, Unit of Measure and Price		Project Information		Split Coding Qty's
24	GR	Pipe Fittings	4565T432 HI-Pressure 304/304L SS Weld-on Pipe Fitting Socket, 1/2" Outlet, Fits 3/4" to 36" Pipe Size UN Number Hazard Class	Quantity	1	Project	45A	
				Unit of Measure	each	Task	45A.20.16.2.11.3.1	
				Price per Unit	$ 34.50	Exp. Type	Material purchase	
				Extended Price	$34.50	Exp. Org.	CMS	

Requisition Lines

Line #	Line Type	PO Line Category	Description (Start with a Noun) (240 Characters Maximum, Enter Additional Description in Cell Below Line Item)	Quantity, Unit of Measure and Price		Project Information		Split Coding Qty's
25	GR	Pipe Fittings	46755K75 Thk-Wall 304/304L SS Thrd Seamless Nipple 3/4" Pipe X 6" Length, 13/16" Thread Length UN Number Hazard Class	Quantity	1	Project	45A	
				Unit of Measure	each	Task	45A.20.16.2.11.3.1	
				Price per Unit	$ 21.84	Exp. Type	Material purchase	
				Extended Price	$21.84	Exp. Org.	CMS	

Requisition Lines

Line #	Line Type	PO Line Category	Description (Start with a Noun) (240 Characters Maximum, Enter Additional Description in Cell Below Line Item)	Quantity, Unit of Measure and Price		Project Information		Split Coding Qty's
26	GR	Pipe Fittings	45605K512 Std-Wall 304/304L SS Butt-Weld Pipe Fitting Unthreaded, 3/4" 90 Deg Long Radius Elbow, Sch 40 UN Number Hazard Class	Quantity	1	Project	45A	
				Unit of Measure	each	Task	45A.20.16.2.11.3.1	
				Price per Unit	$ 6.07	Exp. Type	Material purchase	
				Extended Price	$6.07	Exp. Org.	CMS	

Requisition Lines

Line #	Line Type	PO Line Category	Description (Start with a Noun) (240 Characters Maximum, Enter Additional Description in Cell Below Line Item)	Quantity, Unit of Measure and Price		Project Information		Split Coding Qty's
27	GR	Pipe Fittings	4813K126 Standard-Wall Type 304/304L SS Threaded Pipe 1" Pipe, 1.315" OD, 18" L, 1" Thread Length UN Number Hazard Class	Quantity	2	Project	45A	
				Unit of Measure	each	Task	45A.20.16.2.11.3.1	
				Price per Unit	$ 28.96	Exp. Type	Material purchase	
				Extended Price	$57.92	Exp. Org.	CMS	

Requisition Lines

Line #	Line Type	PO Line Category	Description (Start with a Noun) (240 Characters Maximum, Enter Additional Description in Cell Below Line Item)	Quantity, Unit of Measure and Price		Project Information		Split Coding Qty's
28	GR	Pipe Fittings	9157K25 Thrd One End Std-Wall 304/304L SS Pipe Nipple 1" Pipe, 1-1/2" Length, 1" Thread Length In stock at $3.10 Each UN Number Hazard Class	Quantity	4	Project	45A	
				Unit of Measure	each	Task	45A.20.16.2.11.3.1	
				Price per Unit	$ 3.10	Exp. Type	Material purchase	
				Extended Price	$12.40	Exp. Org.	CMS	

Requisition Lines

Line #	Line Type	PO Line Category	Description (Start with a Noun) (240 Characters Maximum, Enter Additional Description in Cell Below Line Item)	Quantity, Unit of Measure and Price		Project Information		Split Coding Qty's
29	GR	Pipe Fittings	44965K476 Unthreaded HI-Pressure SS Sckt-Weld Fitting 304 Stainless Steel, 1" Pipe Size, Union UN Number Hazard Class	Quantity	2	Project	45A	
				Unit of Measure	each	Task	45A.20.16.2.11.3.1	
				Price per Unit	$ 63.05	Exp. Type	Material purchase	
				Extended Price	$126.10	Exp. Org.	CMS	

Requisition Lines

Line #	Line Type	PO Line Category	Description (Start with a Noun) (240 Characters Maximum, Enter Additional Description in Cell Below Line Item)	Quantity, Unit of Measure and Price		Project Information		Split Coding Qty's
30	GR	Pipe Fittings	4565T341 HI-Pressure 304/304L SS Weld-on Pipe Fitting Threaded, 3/4" Outlet, Fits 3/4" to 1-1/4" Pipe Size UN Number Hazard Class	Quantity	1	Project	45A	
				Unit of Measure	each	Task	45A.20.16.2.11.3.1	
				Price per Unit	$ 30.84	Exp. Type	Material purchase	
				Extended Price	$30.84	Exp. Org.	CMS	

Fermilab

PURCHASE REQUISITION

Requisition

Requisition Number (Filled in by System)	Oracle Preparer (Filled in by System)	Date	Request Originator:	Extension:
		08/03/10	Erik Voirin	#5168
Division/Section Approval		Date	NEPA Approval	
Business Office Approval		Date		
Directorate Approval		Date		

Requisition Header

Description (of entire requisition)
Relief Valves

Note to Approver
These are Stainless Steel relief valves for use on CO2 loop – lead time approaches deadline PLEASE RUSH

Justification (To Approver)

Requisition Entry Defaults

Requester		Deliver-To-Location	Buyer Note (use attachments)	
Erik Voirin		Lab F		
Suggested Vendor		Suggested Vendor Site	Suggested Vendor Contact	Suggested Vendor
Tyco Valves & Controls		554 Territorial Dr.; Bolingbrook, IL 60440	Donald Pratl	Telephone: 630-343-3247
Reference #	Need-By-Date	Project/Task/Expenditure Type and Expenditure Organization		Building Maintenance: Yes or No (Circle One)
	08/31/10	45A / 45A.20.16.2.11.3.1		FIMS #
Note to Receiver				Total of Requisition
This is for CMS CO2 Cooling System				$6440

Requisition Lines

Line #	Line Type	PO Line Category	Description (Start with a Noun) (240 Characters Maximum, Enter Additional Description in Cell Below Line Item)	Quantity, Unit of Measure and Price		Project Information		Split Coding Qty's
1	GR	Relief Valve	81SM68-4 AG SPRING OPERATED PRESSURE RELIEF VALVE BODY: 316SS TRIM: 316SS SEAT/SEALS: PCTFE/TEFLON INLET: 3/4" MNPT OUTLET: 1" FNPT ORIFICE: "4" (0.049 SQ IN) SET PRESSURE: 1200 PSIG SERVICE: GAS/VAPOR CAPACITY: 978 SCFM ACCESSORIES: SCREWED CAP	Quantity	2	Project	45A	
				Unit of Measure	each	Task	45A.20.16.2.11.3.1	
				Price per Unit	$805	Exp. Type	Material purchase	
			UN Number Hazard Class	Extended Price	$1610	Exp. Org.	CMS	

Line #	Line Type	PO Line Category	Description (Start with a Noun) (240 Characters Maximum, Enter Additional Description in Cell Below Line Item)	Quantity, Unit of Measure and Price		Project Information		Split Coding Qty's
2	GR	Sight Glass	81SM88-4 SOSRV 1X1 MXF 316SS BODY: 316SS TRIM: 316SS SEAT/SEALS: PCTFE/TEFLON INLET: 1" MNPT OUTLET: 1" FNPT ORIFICE: "4" (0.049 SQ IN) SET PRESSURE: 1200 PSIG SERVICE: GAS/VAPOR CAPACITY: 978 SCFM ACCESSORIES: SCREWED CAP UN Number Hazard Class	Quantity	5	Project	45A	
				Unit of Measure	each	Task	45A.20.16.2.11.3.1	
				Price per Unit	$805	Exp. Type	Material purchase	
				Extended Price	$4025	Exp. Org.	CMS	

3	GR	Sight Glass	81SM48-4 AG SPRING OPERATED PRESSURE RELIEF VALVE BODY: 316SS TRIM: 316SS SEAT/SEALS: PCTFE/TEFLON INLET: 1/2" MNPT OUTLET: 1" FNPT ORIFICE: "4" (0.049 SQ IN) SET PRESSURE: 1200 PSIG SERVICE: GAS/VAPOR CAPACITY: 978 SCFM ACCESSORIES: SCREWED CAP UN Number Hazard Class	Quantity	1	Project	45A	
				Unit of Measure	each	Task	45A.20.16.2.11.3.1	
				Price per Unit	$805	Exp. Type	Material purchase	
				Extended Price	$805	Exp. Org.	CMS	

Fermilab

PURCHASE REQUISITION

Requisition

Requisition Number (Filled in by System)	Oracle Preparer (Filled in by System)	Date	Request Originator:	Extension:
		07/22/10	Erik Voirin	#5168
Division/Section Approval		Date	NEPA Approval	
Business Office Approval		Date		
Directorate Approval		Date		

Requisition Header

Description (of entire requisition)
Setra C207 pressure transmitters

Note to Approver
For the CMS CO2 cooling system. Ref. Quote # 10070810TP - Remit orders by email to: timp@precisionmeasurement.com or by fax to: (847) 908-7507

Justification (To Approver)

Requisition Entry Defaults

Requester	Deliver-To-Location	Buyer Note (use attachments)
Erik Voirin	**Lab F**	

Suggested Vendor	Suggested Vendor Site	Suggested Vendor Contact	Suggested Vendor
Setra Systems c/o Precision Measurement Products	159 Swanson Rd. Boxborough, MA 01719	Tim Patrick	Telephone: (847) 426-7673

Reference #	Need-By-Date	Project/Task/Expenditure Type and Expenditure Organization	Building Maintenance: Yes or No (Circle One)
	08/31/10	45A / 45A.20.16.2.11.3.1	FIMS #

Note to Receiver	Total of Requisition
This is for CMS CO2 Cooling System	$2740.00

Requisition Lines

Line #	Line Type	PO Line Category	Description (Start with a Noun) (240 Characters Maximum, Enter Additional Description in Cell Below Line Item)	Quantity, Unit of Measure and Price		Project Information		Split Coding Qty's
1	GR	Pressure Transmitter	**Setra Systems Model: C207 – 500 psig** Pressure Transducer Range: 500 psig Output: 4-20 mA Electrical Termination: Terminal Strip Accuracy: +/-0.13% FS UN Number Hazard Class	Quantity	6	Project	45A	
				Unit of Measure	each	Task	45A.20.16.2.11.3.1	
				Price per Unit	$274.00	Exp. Type	Material purchase	
				Extended Price	$1644.00	Exp. Org.	CMS	

Line #	Line Type	PO Line Category	Description (Start with a Noun) (240 Characters Maximum, Enter Additional Description in Cell Below Line Item)	Quantity, Unit of Measure and Price		Project Information		Split Coding Qty's
2	GR	Pressure Transmitter	**Setra Systems Model: C207 – 3000 psig** Pressure Transducer Range: 3000 psig Output: 4-20 mA Electrical Termination: Terminal Strip Accuracy: +/-0.13% FS UN Number Hazard Class	Quantity	4	Project	45A	
				Unit of Measure	Each	Task	45A.20.16.2.11.3.1	
				Price per Unit	$274.00	Exp. Type	Material purchase	
				Extended Price	$1096.00	Exp. Org.	CMS	

Fermilab

PURCHASE REQUISITION

Requisition

Requisition Number (Filled in by System)	Oracle Preparer (Filled in by System)	Date	Request Originator:	Extension:
		06/29/10	Erik Voirin	#5168
Division/Section Approval		Date	NEPA Approval	
Business Office Approval		Date		
Directorate Approval		Date		

Requisition Header

Description (of entire requisition)
Sight Glasses

Note to Approver
These are Stainless Steel sight glasses for the CMS CO2 cooling system. Chemray quote attached.

Justification (To Approver)
See attached justification for noncompetitive procurement

Requisition Entry Defaults

Requester		Deliver-To-Location	Buyer Note (use attachments)	
Erik Voirin		Lab F		
Suggested Vendor		Suggested Vendor Site	Suggested Vendor Contact	Suggested Vendor
Chemray Corp		Naperville	Jim Erdman	Telephone: 630-655-8800
Reference #	Need-By-Date	Project/Task/Expenditure Type and Expenditure Organization		Building Maintenance: Yes or No (Circle One)
	08/31/10	45A / 45A.20.16.2.11.3.1		FIMS #
Note to Receiver				Total of Requisition
This is for CMS CO2 Cooling System				$1070

Requisition Lines

Line #	Line Type	PO Line Category	Description (Start with a Noun) (240 Characters Maximum, Enter Additional Description in Cell Below Line Item)	Quantity, Unit of Measure and Price		Project Information		Split Coding Qty's
1	GR	Sight Glass	**PART # MET61-150S** METAGLAS > THREADED SIGHT WINDOW SIZE: 1-1/2" NPT CONNECTION RING MATERIAL: DUPLEX 2205 STAINLESS STEEL (1.4462) GLASS: BOROSILICATE TO DIN7080 RATED: 1450 PSI @ 450° F UN Number Hazard Class	Quantity	2	Project	45A	
				Unit of Measure	each	Task	45A.20.16.2.11.3.1	
				Price per Unit	$185	Exp. Type	Material purchase	
				Extended Price	$370	Exp. Org.	CMS	

Line #	Line Type	PO Line Category	Description (Start with a Noun) (240 Characters Maximum, Enter Additional Description in Cell Below Line Item)	Quantity, Unit of Measure and Price		Project Information		Split Coding Qty's
2	GR	Sight Glass	**PART # MET61-100S** METAGLAS > THREADED SIGHT WINDOW SIZE: 1" NPT CONNECTION RING MATERIAL: DUPLEX 2205 STAINLESS STEEL (1.4462) GLASS: BOROSILICATE TO DIN7080 RATED: 1450 PSI @ 450° F UN Number Hazard Class	Quantity	4	Project	45A	
				Unit of Measure	each	Task	45A.20.16.2.11.3.1	
				Price per Unit	$175	Exp. Type	Material purchase	
				Extended Price	$700	Exp. Org.	CMS	

Fermilab

PURCHASE REQUISITION

Requisition

Requisition Number (Filled in by System)	Oracle Preparer (Filled in by System)	Date	Request Originator:	Extension:
		08/05/10	Erik Voirin	#5168
Division/Section Approval		Date	NEPA Approval	
Business Office Approval		Date		
Directorate Approval		Date		

Requisition Header

Description (of entire requisition)
Wye Strainers for piping

Note to Approver
For the CMS CO2 cooling system. REFERENCE QUOTE #937167 (quoted by phone)

Justification (To Approver)

Requisition Entry Defaults

Requester	Deliver-To-Location	Buyer Note (use attachments)	
Erik Voirin	**Lab F**		
Suggested Vendor	Suggested Vendor Site	Suggested Vendor Contact	Suggested Vendor
Columbia Pipe	1120 West Pershing Road; Chicago, Illinois 60609	John	Telephone: (773) 843-5818
Reference # / Need-By-Date	Project/Task/Expenditure Type and Expenditure Organization		Building Maintenance: Yes or No (Circle One)
08/31/10	45A / 45A.20.16.2.11.3.1		FIMS #
Note to Receiver			Total of Requisition
This is for CMS CO2 Cooling System			$948.91

Requisition Lines

Line #	Line Type	PO Line Category	Description (Start with a Noun) (240 Characters Maximum, Enter Additional Description in Cell Below Line Item)	Quantity, Unit of Measure and Price		Project Information		Split Coding Qty's
1	GR	Wye Strainer	Item # SSB-7-600-sw-1, Style SSB-7 600# Socket Weld 316 Stainless Steel Y Strainers With 30 mesh screen UN Number Hazard Class	Quantity	1	Project	45A	
				Unit of Measure	each	Task	45A.20.16.2.11.3.1	
				Price per Unit	$216.63	Exp. Type	Material purchase	
				Extended Price	$216.63	Exp. Org.	CMS	

Line #	Line Type	PO Line Category	Description (Start with a Noun) (240 Characters Maximum, Enter Additional Description in Cell Below Line Item)	Quantity, Unit of Measure and Price		Project Information		Split Coding Qty's
2	GR	Wye Strainer	Item # SSB-7-600-sw-1 1/2, Style SSB-7 600# Socket Weld 316 Stainless Steel Y Strainers With 30 mesh screen UN Number Hazard Class	Quantity	1	Project	45A	
				Unit of Measure	Each	Task	45A.20.16.2.11.3.1	
				Price per Unit	$366.14	Exp. Type	Material purchase	
				Extended Price	$366.14	Exp. Org.	CMS	

Line #	Line Type	PO Line Category	Description (Start with a Noun) (240 Characters Maximum, Enter Additional Description in Cell Below Line Item)	Quantity, Unit of Measure and Price		Project Information		Split Coding Qty's
3	GR	Wye Strainer	Item # SSB-7-600-sw-1 1/2, Style SSB-7 600# Socket Weld 316 Stainless Steel Y Strainers With 200 mesh screen UN Number Hazard Class	Quantity	1	Project	45A	
				Unit of Measure	Each	Task	45A.20.16.2.11.3.1	
				Price per Unit	$366.14	Exp. Type	Material purchase	
				Extended Price	$366.14	Exp. Org.	CMS	

Fermilab

PURCHASE REQUISITION

Requisition

Requisition Number (Filled in by System)	Oracle Preparer (Filled in by System)	Date	Request originator:	Extension: 5168
		09/09/10	Erik Voirin	MS: 219
Division/Section Approval		Date	NEPA Approval	
Business Office Approval		Date		
Directorate Approval		Date		

Requisition Header

Description (of entire requisition)
Piping for CMS cooling test stand.

Note to Approver

Justification (To Approver)

Requisition Entry Defaults

Requester	Deliver-To-Location	Buyer Note (use attachments) (i.e., Previous PO)		
Erik Voirin	Lab F			
Suggested Vendors	Suggested Vendor Site	Suggested Vendor Contact	Suggested Vendors	
RJ Keck Pipe and Supply Co.	2125 Aucutt rd. Montgomery IL, 60538	Matt Loboda	Telephone #(630) 859-3111	
Reference # / Need-By-Date	Project/Task/Expenditure Type and Expenditure Organization		Building Maintenance: No	
9/21/2010	45A / 45A.20.16.2.11.3.1		FIMS #	
Note to Receiver			Total of Requisition	
Piping for CMS cooling test stand.			$606.98	

Requisition Lines

Line #	Line Type	PO Line Category	Description (Start with a Noun) (240 Characters Maximum, Enter Additional Description in Cell Below Line Item)	Quantity, Unit of Measure and Price		Project Information		Split Coding Qty's
1	GR	Pipe	1 Section – avg. length 23 feet 17-24 Ft. (1 Random Length) 2 Sch 10 T304/304L Seamless Pipe $2.98/Ft. UN Number Hazard Class	Quantity	23	Project	45A	
				Unit of Measure	ft	Task	45A.20.16.2.11.3.1	
				Price per Unit	$10.25	Exp. Type	Material purchase	
				Extended Price	$235.75	Exp. Org.	CMS	

Requisition Lines

Line #	Line Type	PO Line Category	Description (Start with a Noun) (240 Characters Maximum, Enter Additional Description in Cell Below Line Item)	Quantity, Unit of Measure and Price		Project Information		Split Coding Qty's
2	GR	Pipe	1 Sections – avg. length 23 feet 153-216 Ft. (9 Random Lengths) 1 Sch 10 T304/304L Seamless Pipe $5.525/Ft. UN Number Hazard Class	Quantity	23	Project	45A	
				Unit of Measure	ft	Task	45A.20.16.2.11.3.1	
				Price per Unit	$5.525	Exp. Type	Material purchase	
				Extended Price	$127.08	Exp. Org.	CMS	

Requisition Lines

Line #	Line Type	PO Line Category	Description (Start with a Noun) (240 Characters Maximum, Enter Additional Description in Cell Below Line Item)	Quantity, Unit of Measure and Price		Project Information		Split Coding Qty's
3	GR	Pipe	3 Sections – avg. length 23 feet 153-216 Ft. (9 Random Lengths) 1.5 Sch 10 T304/304L Seamless Pipe $5.42/Ft. UN Number Hazard Class	Quantity	184.5	Project	45A	
				Unit of Measure	ft	Task	45A.20.16.2.11.3.1	
				Price per Unit	$7.875	Exp. Type	Material purchase	
				Extended Price	$181.13	Exp. Org.	CMS	

Requisition Lines

Line #	Line Type	PO Line Category	Description (Start with a Noun) (240 Characters Maximum, Enter Additional Description in Cell Below Line Item)	Quantity, Unit of Measure and Price		Project Information		Split Coding Qty's
3	GR	Pipe	Contingency for random lengths for this and previous order UN Number Hazard Class	Quantity	1	Project	45A	
				Unit of Measure	-	Task	45A.20.16.2.11.3.1	
				Price per Unit	$63.02	Exp. Type	Material purchase	
				Extended Price	$63.02	Exp. Org.	CMS	

Fermilab

PURCHASE REQUISITION

Requisition

Requisition Number (Filled in by System)	Oracle Preparer (Filled in by System)	Date	Request originator:	Extension: 5168
		09/01/10	Erik Voirin	MS: 219
Division/Section Approval		Date	NEPA Approval	
Business Office Approval		Date		
Directorate Approval		Date		

Requisition Header

Description (of entire requisition) Piping for CMS cooling test stand.
Note to Approver
Justification (To Approver)

Requisition Entry Defaults

Requester	Deliver-To-Location	Buyer Note (use attachments) (i.e., Previous PO)	
Erik Voirin	Lab F		
Suggested Vendors	Suggested Vendor Site	Suggested Vendor Contact	Suggested Vendors
RJ Keck Pipe and Supply Co.	2125 Aucutt rd. Montgomery IL, 60538	Matt Loboda	Telephone #(630) 859-3111
Reference # / Need-By-Date: 9/21/2010	Project/Task/Expenditure Type and Expenditure Organization: 45A / 45A.20.16.2.11.3.1		Building Maintenance: No FIMS #
Note to Receiver Piping for CMS cooling test stand.			Total of Requisition $1061.08

Requisition Lines

Line #	Line Type	PO Line Category	Description (Start with a Noun) (240 Characters Maximum, Enter Additional Description in Cell Below Line Item)	Quantity, Unit of Measure and Price		Project Information		Split Coding Qty's
1	GR	Pipe	1 Section – avg. length 20.5 feet 17-24 Ft. (1 Random Length) 1/2 Sch 10 T304/304L Seamless Pipe $2.98/Ft. UN Number Hazard Class	Quantity	20.5	Project	45A	
				Unit of Measure	ft	Task	45A.20.16.2.11.3.1	
				Price per Unit	$2.98	Exp. Type	Material purchase	
				Extended Price	$61.09	Exp. Org.	CMS	

Requisition Lines

Line #	Line Type	PO Line Category	Description (Start with a Noun) (240 Characters Maximum, Enter Additional Description in Cell Below Line Item)	Quantity, Unit of Measure and Price		Project Information		Split Coding Qty's
2	GR	Pipe	9 Sections – avg. length 20.5 feet 153-216 Ft. (9 Random Lengths) 1 Sch 10 T304/304L Seamless Pipe $5.42/Ft. UN Number Hazard Class	Quantity	184.5	Project	45A	
				Unit of Measure	ft	Task	45A.20.16.2.11.3.1	
				Price per Unit	$5.42	Exp. Type	Material purchase	
				Extended Price	$999.99	Exp. Org.	CMS	

Fermilab

PURCHASE REQUISITION

Requisition

Requisition Number (Filled in by System)	Oracle Preparer (Filled in by System)	Date	Request originator:	Extension: 5168
		09/08/10	Erik Voirin	MS: 219
Division/Section Approval		Date	NEPA Approval	
Business Office Approval		Date		
Directorate Approval		Date		

Requisition Header

Description (of entire requisition)
Nuts / Studs for all flanges of CO2 Test stand – ASTM A320 Low Temperature / High Strength Studs

Note to Approver

Justification (To Approver)

Requisition Entry Defaults

Requester		Deliver-To-Location	Buyer Note (use attachments) (i.e., Previous PO)	
Erik Voirin		Lab F		
Suggested Vendors		Suggested Vendor Site	Suggested Vendor Contact	Suggested Vendors
Fastenal		900 Paramount Pkwy Ste A Batavia, IL 60510		Phone # (630)879-2782
Reference #	Need-By-Date	Project/Task/Expenditure Type and Expenditure Organization		Building Maintenance: No
	9/30/2010	45A / 45A.20.16.2.11.3.1		FIMS #
Note to Receiver				Total of Requisition
				$1994.62

Requisition Lines

Line #	Line Type	PO Line Category	Description (Start with a Noun) (240 Characters Maximum, Enter Additional Description in Cell Below Line Item)	Quantity, Unit of Measure and Price		Project Information		Split Coding Qty's
1	GR	Fasteners	**SKU:** 0187985 1-1/4"-8x8-3/4" (OAL 9") A320 L7 Fully Threaded Stud w/ Gr7 Nuts UN Number Hazard Class	Quantity	61	Project	45A	
				Unit of Measure	each	Task	45A.20.16.2.11.3.1	
				Price per Unit	$ 26.42	Exp. Type	Material purchase	
				Extended Price	$1611.62	Exp. Org.	CMS	

Requisition Lines

Line #	Line Type	PO Line Category	Description (Start with a Noun) (240 Characters Maximum, Enter Additional Description in Cell Below Line Item)	Quantity, Unit of Measure and Price		Project Information		Split Coding Qty's
2	GR	Fasteners	**SKU:** 0187842 3/4"-10x4-1/4" (OAL 4-1/2") A320 L7 Fully Threaded Stud w/ Gr7 Nuts UN Number Hazard Class	Quantity	56	Project	45A	
				Unit of Measure	each	Task	45A.20.16.2.11.3.1	
				Price per Unit	$ 5.37	Exp. Type	Material purchase	
				Extended Price	$300.72	Exp. Org.	CMS	

Requisition Lines

Line #	Line Type	PO Line Category	Description (Start with a Noun) (240 Characters Maximum, Enter Additional Description in Cell Below Line Item)	Quantity, Unit of Measure and Price		Project Information		Split Coding Qty's
3	GR	Fasteners	**SKU:** 0187809 5/8"-11x3-1/4" (OAL 3-1/2") A320 L7 Fully Threaded Stud w/ Gr7 Nuts UN Number Hazard Class	Quantity	22	Project	45A	
				Unit of Measure	Each	Task	45A.20.16.2.11.3.1	
				Price per Unit	$ 3.74	Exp. Type	Material purchase	
				Extended Price	$82.28	Exp. Org.	CMS	

Fermilab

PURCHASE REQUISITION

Requisition

Requisition Number (Filled in by System)	Oracle Preparer (Filled in by System)	Date	Request Originator:	Extension:
		07/22/10	Erik Voirin	#5168
Division/Section Approval		Date	NEPA Approval	
Business Office Approval		Date		
Directorate Approval		Date		

Requisition Header

Description (of entire requisition)
Intempco thermowells, temperature probes, and surface mount temperature sensors

Note to Approver
These are for the CMS CO2 cooling system. Chemray quote #160227G attached.

Justification (To Approver)

Requisition Entry Defaults

Requester	Deliver-To-Location	Buyer Note (use attachments)	
Erik Voirin	**Lab F**		
Suggested Vendor	Suggested Vendor Site	Suggested Vendor Contact	Suggested Vendor
Chemray Corp	Naperville	Jim Erdman	Telephone: 630-655-8800
Reference # / Need-By-Date	Project/Task/Expenditure Type and Expenditure Organization		Building Maintenance: Yes or No (Circle One)
08/31/10	45A / 45A.20.16.2.11.3.1		FIMS #
Note to Receiver			Total of Requisition
This is for CMS CO2 Cooling System			$1591

Requisition Lines

Line #	Line Type	PO Line Category	Description (Start with a Noun) (240 Characters Maximum, Enter Additional Description in Cell Below Line Item)	Quantity, Unit of Measure and Price		Project Information		Split Coding Qty's
1	GR	Thermowell	Line 1) **TW10-3/4-L4-SS316**, Thermowell, ¾" NPT process fitting, 2.5" immersion length, 4" overall length, ½" NPT sensor fitting, for CO2 gas @ 1200 PSIG max. UN Number Hazard Class	Quantity	1	Project	45A	
				Unit of Measure	each	Task	45A.20.16.2.11.3.1	
				Price per Unit	$48	Exp. Type	Material purchase	
				Extended Price	$48	Exp. Org.	CMS	

Line #	Line Type	PO Line Category	Description (Start with a Noun) (240 Characters Maximum, Enter Additional Description in Cell Below Line Item)	Quantity, Unit of Measure and Price		Project Information		Split Coding Qty's
2	GR	RTD probe	Line 2) **R18CL-P-1-S3-4-S-12S-TF-072-00-040**, Pt-100 RTD, 3-wire,0.12% tolerance, 4" probe, length, ½" NPT spring loaded fitting for insertion into thermowell, Item 1 above, 72" Teflon cable UN Number Hazard Class	Quantity	4	Project	45A	
				Unit of Measure	each	Task	45A.20.16.2.11.3.1	
				Price per Unit	$96	Exp. Type	Material purchase	
				Extended Price	$384	Exp. Org.	CMS	

Line #	Line Type	PO Line Category	Description (Start with a Noun) (240 Characters Maximum, Enter Additional Description in Cell Below Line Item)	Quantity, Unit of Measure and Price		Project Information		Split Coding Qty's
3	GR	Thermowell	Line 3) **TW10-3/4-L6-SS316**, Thermowell, ¾" NPT process fitting, 4.5" immersion length, 6" overall length, ½" NPT sensor fitting, for CO2 gas @ 1200 PSIG max. UN Number Hazard Class	Quantity	1	Project	45A	
				Unit of Measure	each	Task	45A.20.16.2.11.3.1	
				Price per Unit	$58	Exp. Type	Material purchase	
				Extended Price	$58	Exp. Org.	CMS	

Line #	Line Type	PO Line Category	Description (Start with a Noun) (240 Characters Maximum, Enter Additional Description in Cell Below Line Item)	Quantity, Unit of Measure and Price		Project Information		Split Coding Qty's
4	GR	RTD probe	Line 4) **R18CL-P-1-S3-4-S-12S-TF-072-00-060**, Pt-100 RTD, 3-wire,0.12% tolerance, 6" probe, length, ½" NPT spring loaded fitting for insertion into thermowell, Item 3 above, 72" Teflon cable UN Number Hazard Class	Quantity	1	Project	45A	
				Unit of Measure	each	Task	45A.20.16.2.11.3.1	
				Price per Unit	$97	Exp. Type	Material purchase	
				Extended Price	$97	Exp. Org.	CMS	

Line #	Line Type	PO Line Category	Description (Start with a Noun) (240 Characters Maximum, Enter Additional Description in Cell Below Line Item)	Quantity, Unit of Measure and Price		Project Information		Split Coding Qty's
5	GR	Thermowell	Line 5) **TW30-1-1/2-L4-SS316**, Thermowell, 1-1/2" socket weld process fitting, 2.5" immersion length, 4" overall length, ½" NPT sensor fitting, for CO2 gas @ 1200 PSIG max. UN Number Hazard Class	Quantity	2	Project	45A	
				Unit of Measure	each	Task	45A.20.16.2.11.3.1	
				Price per Unit	$73	Exp. Type	Material purchase	
				Extended Price	$73	Exp. Org.	CMS	

Line #	Line Type	PO Line Category	Description (Start with a Noun) (240 Characters Maximum, Enter Additional Description in Cell Below Line Item)	Quantity, Unit of Measure and Price		Project Information		Split Coding Qty's
6	GR	Thermowell	Line 6) **TW30-1-L4-SS316**, Thermowell, 1" socket weld process fitting, 2.5" immersion length, 4" overall length, ½" NPT sensor fitting, for CO2 gas @ 1200 PSIG max. UN Number Hazard Class	Quantity	1	Project	45A	
				Unit of Measure	each	Task	45A.20.16.2.11.3.1	
				Price per Unit	$61	Exp. Type	Material purchase	
				Extended Price	$61	Exp. Org.	CMS	

Line #	Line Type	PO Line Category	Description (Start with a Noun) (240 Characters Maximum, Enter Additional Description in Cell Below Line Item)	Quantity, Unit of Measure and Price		Project Information		Split Coding Qty's
7	GR	Surface Mount RTD	Line 7) **RL35A-P1-S3-T072**, surface mount RTD, Pt-100, 3-wire, 0.1% tolerance, 72 inch Teflon cable UN Number Hazard Class	Quantity	6	Project	45A	
				Unit of Measure	each	Task	45A.20.16.2.11.3.1	
				Price per Unit	$145	Exp. Type	Material purchase	
				Extended Price	$870	Exp. Org.	CMS	

Fermilab

PURCHASE REQUISITION

Requisition

Requisition Number (Filled in by System)	Oracle Preparer (Filled in by System)	Date 09/07/10	Request originator: Erik Voirin	Extension: 5168 MS: 219
Division/Section Approval		Date	NEPA Approval	
Business Office Approval		Date		
Directorate Approval		Date		

Requisition Header

Description (of entire requisition)
Hart Orifice Union

Note to Approver

Justification (To Approver)

Requisition Entry Defaults

Requester	Deliver-To-Location	Buyer Note (use attachments) (i.e., Previous PO)	
Erik Voirin	Lab F		
Suggested Vendors: Hart Industries	Suggested Vendor Site: Newington, CT 06131	Suggested Vendor Contact	Suggested Vendors: Telephone 800-769-0503
Reference #	Need-By-Date: 9/30/2010	Project/Task/Expenditure Type and Expenditure Organization: 45A / 45A.20.16.2.11.3.1	Building Maintenance: No FIMS #
Note to Receiver			Total of Requisition: $483.60

Requisition Lines

Line #	Line Type	PO Line Category	Description (Start with a Noun) (240 Characters Maximum, Enter Additional Description in Cell Below Line Item)	Quantity, Unit of Measure and Price		Project Information		Split Coding Qty's
29	GR	Pipe Fittings	3333-5-T-304L Hart Union 1" socket weld schedule 10 connection. Stainless Steel with Teflon O-ring. UN Number Hazard Class	Quantity	4	Project	45A	
				Unit of Measure	each	Task	45A.20.16.2.11.3.1	
				Price per Unit	$ 120.90	Exp. Type	Material purchase	
				Extended Price	$483.60	Exp. Org.	CMS	

Fermilab

PURCHASE REQUISITION

Requisition

Requisition Number (Filled in by System)	Oracle Preparer (Filled in by System)	Date 09/07/10	Request originator: Erik Voirin	Extension: 5168 MS: 219
Division/Section Approval		Date	NEPA Approval	
Business Office Approval		Date		
Directorate Approval		Date		

Requisition Header

Description (of entire requisition)
Hart Orifice Union

Note to Approver

Justification (To Approver)

Requisition Entry Defaults

Requester	Deliver-To-Location	Buyer Note (use attachments) (i.e., Previous PO)	
Erik Voirin	Lab F		
Suggested Vendors: Hart Industries	Suggested Vendor Site: Newington, CT 06131	Suggested Vendor Contact	Suggested Vendors: Telephone 800-769-0503
Reference #	Need-By-Date: 9/30/2010	Project/Task/Expenditure Type and Expenditure Organization: 45A / 45A.20.16.2.11.3.1	Building Maintenance: No FIMS #
Note to Receiver			Total of Requisition: $94.00

Requisition Lines

Line #	Line Type	PO Line Category	Description (Start with a Noun) (240 Characters Maximum, Enter Additional Description in Cell Below Line Item)	Quantity, Unit of Measure and Price		Project Information		Split Coding Qty's
29	GR	Pipe Fittings	O-3333-3-T-304L Orifice Union with Blank orifice. ½" socket weld schedule 10 connections. Stainless Steel with Teflon O-ring. UN Number Hazard Class	Quantity	1	Project	45A	
				Unit of Measure	each	Task	45A.20.16.2.11.3.1	
				Price per Unit	$ 94.00	Exp. Type	Material purchase	
				Extended Price	$94.00	Exp. Org.	CMS	

Fermilab

PURCHASE REQUISITION

Requisition

Requisition Number (Filled in by System)	Oracle Preparer (Filled in by System)	Date 06/28/10	Request originator: Erik Voirin	Extension: 5168 MS: 219
Division/Section Approval		Date	NEPA Approval	
Business Office Approval		Date		
Directorate Approval		Date		

Requisition Header

Description (of entire requisition)
Valves for CMS Upgrade project – PIXEL Detector Upgrade Demo CO_2

Note to Approver

Justification (To Approver)

Requisition Entry Defaults

Requester	Deliver-To-Location	Buyer Note (use attachments) (i.e., Previous PO)	
Erik Voirin	Lab F		
Suggested Vendors: Janco Process Controls	Suggested Vendor Site: 368 West Liberty Street, Suite H Wauconda, IL 60084	Suggested Vendor Contact: Nick Patitsas	Suggested Vendors: Telephone (847) 526-0800
Reference #	Need-By-Date: 08-01-2010	Project/Task/Expenditure Type and Expenditure Organization: 45A / 45A.20.16.2.11.3.1	Building Maintenance: Yes or No (Circle One) FIMS #
Note to Receiver: This is for CMS CO2 Cooling System			Total of Requisition: $ 4949.00

Requisition Lines

Line #	Line Type	PO Line Category	Description (Start with a Noun) (240 Characters Maximum, Enter Additional Description in Cell Below Line Item)	Quantity, Unit of Measure and Price		Project Information		Split Coding Qty's
1	GR	Valve	Ball Valve, full port, Stainless Steel, Threaded Connection. SHARPE 3/8" 99-66-R-T-TE UN Number Hazard Class	Quantity	3	Project	45A	
				Unit of Measure	each	Task	45A.20.16.2.11.3.1	
				Price per Unit	$98.00	Exp. Type	Material purchase	
				Extended Price	$294.00	Exp. Org.	CMS	

Line #	Line Type	PO Line Category	Description (Start with a Noun) (240 Characters Maximum, Enter Additional Description in Cell Below Line Item)	Quantity, Unit of Measure and Price		Project Information		Split Coding Qty's
2	GR	Valve	Ball Valve, full port, Stainless Steel, Threaded Connection. SHARPE 1/2" 99-66-R-T-TE UN Number Hazard Class	Quantity	5	Project	45A	
				Unit of Measure	each	Task	45A.20.16.2.11.3.1	
				Price per Unit	$118.00	Exp. Type	Material purchase	
				Extended Price	$590.00	Exp. Org.	CMS	

Line #	Line Type	PO Line Category	Description (Start with a Noun) (240 Characters Maximum, Enter Additional Description in Cell Below Line Item)	Quantity, Unit of Measure and Price		Project Information		Split Coding Qty's
3	GR	Valve	Ball Valve, full port, Stainless Steel, Threaded Connection. SHARPE 3/4" 99-66-R-T-SW UN Number Hazard Class	Quantity	1	Project	45A	
				Unit of Measure	each	Task	45A.20.16.2.11.3.1	
				Price per Unit	$175.00	Exp. Type	Material purchase	
				Extended Price	$175.00	Exp. Org.	CMS	

Line #	Line Type	PO Line Category	Description (Start with a Noun) (240 Characters Maximum, Enter Additional Description in Cell Below Line Item)	Quantity, Unit of Measure and Price		Project Information		Split Coding Qty's
4	GR	Valve	Ball Valve, full port, Stainless Steel, Threaded Connection. SHARPE 1" 99-66-R-T-SW UN Number Hazard Class	Quantity	6	Project	45A	
				Unit of Measure	each	Task	45A.20.16.2.11.3.1	
				Price per Unit	$263.00	Exp. Type	Material purchase	
				Extended Price	$1578.00	Exp. Org.	CMS	

Line #	Line Type	PO Line Category	Description (Start with a Noun) (240 Characters Maximum, Enter Additional Description in Cell Below Line Item)	Quantity, Unit of Measure and Price		Project Information		Split Coding Qty's
5	GR	Valve	Ball Valve, full port, Stainless Steel, Threaded Connection. SHARPE 1-1/2" 99-66-R-T-SW UN Number Hazard Class	Quantity	6	Project	45A	
				Unit of Measure	each	Task	45A.20.16.2.11.3.1	
				Price per Unit	$335.00	Exp. Type	Material purchase	
				Extended Price	$2010.00	Exp. Org.	CMS	

Line #	Line Type	PO Line Category	Description (Start with a Noun) (240 Characters Maximum, Enter Additional Description in Cell Below Line Item)	Quantity, Unit of Measure and Price		Project Information		Split Coding Qty's
6	GR	Valve	Ball Valve, full port, Stainless Steel, Threaded Connection. SHARPE 1/2" 99-66-R-T-SW UN Number Hazard Class	Quantity	2	Project	45A	
				Unit of Measure	each	Task	45A.20.16.2.11.3.1	
				Price per Unit	$151.00	Exp. Type	Material purchase	
				Extended Price	$302.00	Exp. Org.	CMS	

9. Leak / Pressure Test Procedures

APPENDIX G

PRESSURE TESTING INFORMATION

Testing Procedures:

The CMS CO2 Piping Network will be leak checked and pressure tested in accordance with FESHM 5034 and ASME 31.3 code for process piping. The Layout of the pressure test will be as in the diagram below.

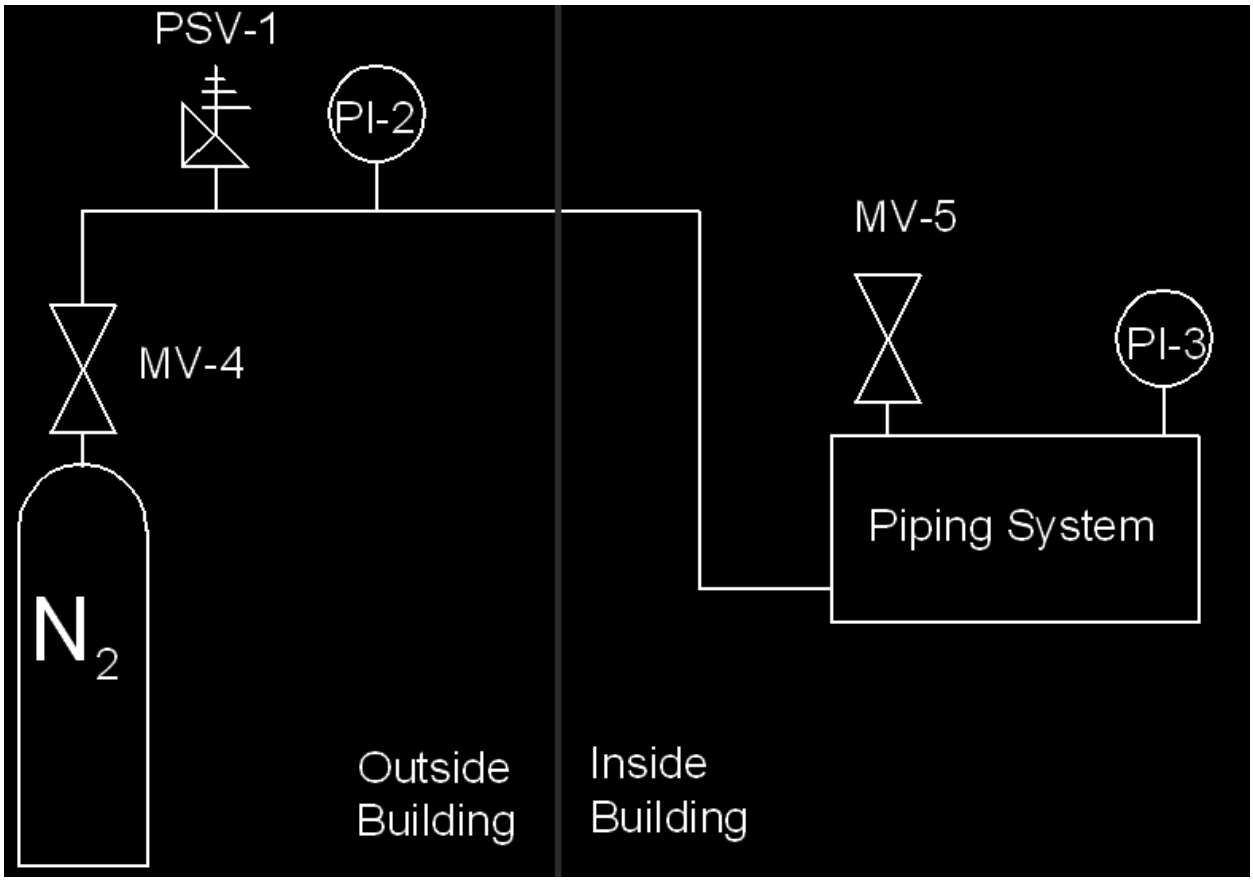

The proposed leak and pressure test will begin once Lab C is cleared of all personnel and the building is blocked of all through traffic. The Main Storage Tank will be blocked off with plates as it has been previously tested and will not be included in this test. The nitrogen supply cylinder will be located outside of the building and be connected to the CO_2 Piping by a ¼" copper tube. The cylinder will contain a relief valve (PSV-1) set to 1350 psi as close as possible after

the manual valve on the cylinder. The cylinder will be run without a regulator due to a regulator being unable to supply the high pressure involved in the test. A pressure gauge (PI-2) will follow the relief valve, then the copper tubing will route into the building and attach to a ¼" fitting on the piping network.

Pressure Step 1: 25 psi

Pressurization will begin by slowly opening the valve and pressurizing to 25psi as given by PI-2. At this time MV-4 will be closed and the system pressure monitored for pressure holding in an attempt to find gross leaks. After 3 minutes, testers will enter the building and bubble test all welds, joints, and flex hoses for leaks.

Pressure Step 2: 330 psi

If no leaks are found the pressure will be raised slowly to 330 psi, and held for 5 minutes monitoring the system pressure for changes via PI-2. If the pressure decreases, implying a leak, the system pressure will be reduced by throttling MV-5 back to pressure step 1 (25 psi) where another bubble test will be performed in an attempt to locate the leak. If the system pressure does not decrease as seen on PI-2 pressurization will proceed to pressure step 3.

Pressure Step 3: 660 psi

The pressure will be raised slowly to 660 psi, and held for 5 minutes monitoring the system pressure for changes via PI-2. The previous circumstances for moving to the next pressure step or reducing pressure and bubble testing will be followed in this pressure step as well as any subsequent pressure steps.

Pressure Step 4: 990 psi

The pressure will be raised slowly to 990 psi, and held for 5 minutes monitoring the system pressure for changes via PI-2.

Pressure Step 5: 1320 psi

The pressure will be raised slowly to 990 psi, and held for <u>10 minutes</u> monitoring the system pressure for changes via PI-2.

Pressure Step 6: 1200 psi

The pressure will be decreased slowly to 1200 psi as indicated by PI-2. The pressure reading of PI-3 will be noted at this time as well. All joints, welds, gaskets and flex hoses will be visually examined and bubble tested. If all piping areas pass the visual inspection and the readings of PI-2 and PI-3 have not decreased, the system will be considered to pass the leak and pressure test.

Relieving Pressure

MV-5 will be slowly opened and the system pressure slowly decreased back to atmospheric.

Testing Equipment:

- Test Pressure Fluid:
  - Pneumatic Test Using compressed nitrogen cylinder.

- Test Pressure:
  - 110% of design pressure. 110% * 1200 psi = 1320 psi

- Relief Valve: (PSV-1)
  - Tamper-Resistant Adj Steel Relief Valve 1/4 NPT Male Inlet, 1/4 NPT Fem Outlet, 900-2000 PSI
  - Purchased from McMaster-Carr Part #5026K31

- Supply Tubing:
  - ¼" OD by 0.030" wall rated at 1593 psi MAWP
  - Purchased from Fermilab Stockroom: 1065-006000

American Society of Mechanical Engineers Code for Pressure Piping (ASME B31):

$$P = \frac{2S(t_{min} - C)}{D_{max} - 0.8\,(t_{min} - C)}$$

where:
P = allowable pressure, psi
S = maximum allowable stress in tension, psi
t_{min} = wall thickness (min.), in.
D_{max} = outside diameter (max.), in.
C = a constant

$C := 0$

$S := 6000\text{psi}$

$t_{min} := 0.030\text{in}$

$D_{max} := 0.25\text{in}$

$$P := \frac{2 \cdot S \cdot (t_{min} - C)}{D_{max} - 0.8(t_{min} - C)} = 1593\,\text{psi}$$

- Test Gauges: (PI-2 and PI-3)
  - Multipurpose Gauge +/-2% MID-Scale Accuracy 2-1/2" Dial, 1/4" NPT Male Bottom, 0 - 2000 PSI
  - Purchased from McMaster-Carr; Item 4089K712
  - Quantity = 2 for cross referencing.

- Manual Valve: (MV-5)
  - Sharpe ¼" 99 Series Valve (standard valve on CO_2 piping system)

Fermilab

Date: April 28, 2011

EXHIBIT B
Pressure Testing Permit*

Type of Test: [ ]Hydrostatic [X] Pneumatic

Test Pressure **1320 psig** Maximum Allowable Working Pressure **1200 psig**

Items to be Tested: **Stainless Pipe System for CMS CO_2 Test Stand**

Location of Test **Lab C** Date and Time: **6 a.m. Friday April 29, 2011**

Hazards Involved: **1.) Overpressure of pipe.**
2.) Sudden release of pressure.
3.) Pressure regulator failure.
4.) Objects becoming projectiles in event of pipe rupture.

Safety Precautions Taken: **1). Relief Valve in Place on Piping**
2.) Eye protection worn during test.
3.) Personnel monitoring cylinder ready to shut off supply.
4.) Test performed off hours, building vacated and barricaded. Also cylinder and personnel performing test will be outdoors of the building containing the pressurized piping, and will remain there during any pressure changes and will not enter until steady pressure holding is observed for 10 minutes. A preliminary leak check was also performed to find any potential leak points.

Special Conditions or Requirements: **None**

Qualified Person and Test Coordinator: **Erik Voirin** Dept/Date: **PPD / April 29, 2011**

Division/Section Safety Officer **Eric McHugh** Dept/Date **PPD / April 29, 2011**

Results: **Passed Pressure Test – System Held 1320 psi for 10 minutes**

Witness/Dept/Date **Abraham Diaz and Mark Shoun/ PPD / April 29, 2011**

(Safety Officer or Designee)
* Must be signed by division/section safety officer prior to conducting test. It is the responsibility of the test coordinator to obtain signatures.