5022TA

4.2

BELOW-THE-HOOK LIFTING DEVICE
Engineering Note Cover Page

Lifting Device Numbers:

FNAL Site No/ _____ If applicable

Div. Specific No. 155 If applicable

Asset No. _____ If applicable

ASME B30.20 Group: (check one)
- [ ] Group I — Structural and Mechanical Lifting Devices
- [ ] Group II — Vacuum Lifting Devices
- [ ] Group III — Magnets, Close Proximity Operated
- [ ] Group IV — Magnets, Remote Operated

Device Name or Description: TOP LIFTER

Device was (check all applicable)
- [ ] Purchased from a Commercial Lifting Device Manufacturer. Mfg Name _____
- [X] Designed and Built at Fermilab SEE DWG. MC-435219...
- [ ] Designed by Fermilab and Built by a Vendor. Assy drawing number _____
- [ ] Provided by a User or other Laboratory
- [ ] Other: Describe _____

Engineering Note Prepared by ANDREW SZYMULANSKI Date FEB. 2. 2005

Engineering Note Reviewed by [signature] Date 2/10/05

Lifting Device Data:

Capacity 1,000. [lbs]

Fixture Weight 7.8 [lbs]

Service: [X] normal [ ] heavy [ ] severe (refer to B30.20 for definitions)

Duty Cycle _____ 8, 16 or 24 hour rating (applicable to groups III, and IV)

Inspections Frequency _____

Rated Load Test by FNAL (if applicable) Date _____ Load 3,656. [lbs]

[ ] Check if Load Test was by Vendor and attach the certificate

Satisfactory Load Test Witnessed by: _____

Signature (of Load Test Witness) _____

Notes or Special Information:

- SEE PAGES 31, THROUGH 37 FOR CALCULATIONS; PAGE 39, 40 FOR TEST ARRANGEMENT AND LIFTING DEVICE (TOP LIFTER) ASSEMBLY DWG.
- THIS DOCUMENT IS A PART OF THE ENGINEERING NOTE: "1 LITER BUBBLE CHAMBER INSTALLATION IN THE "MINOS" DETECTOR HALL MD-ENG-075

4.1 LIFTING ARRANGEMENT – ALTERNATIVE METHOD

4.1.1 ARRANGEMENT SCHEMATIC

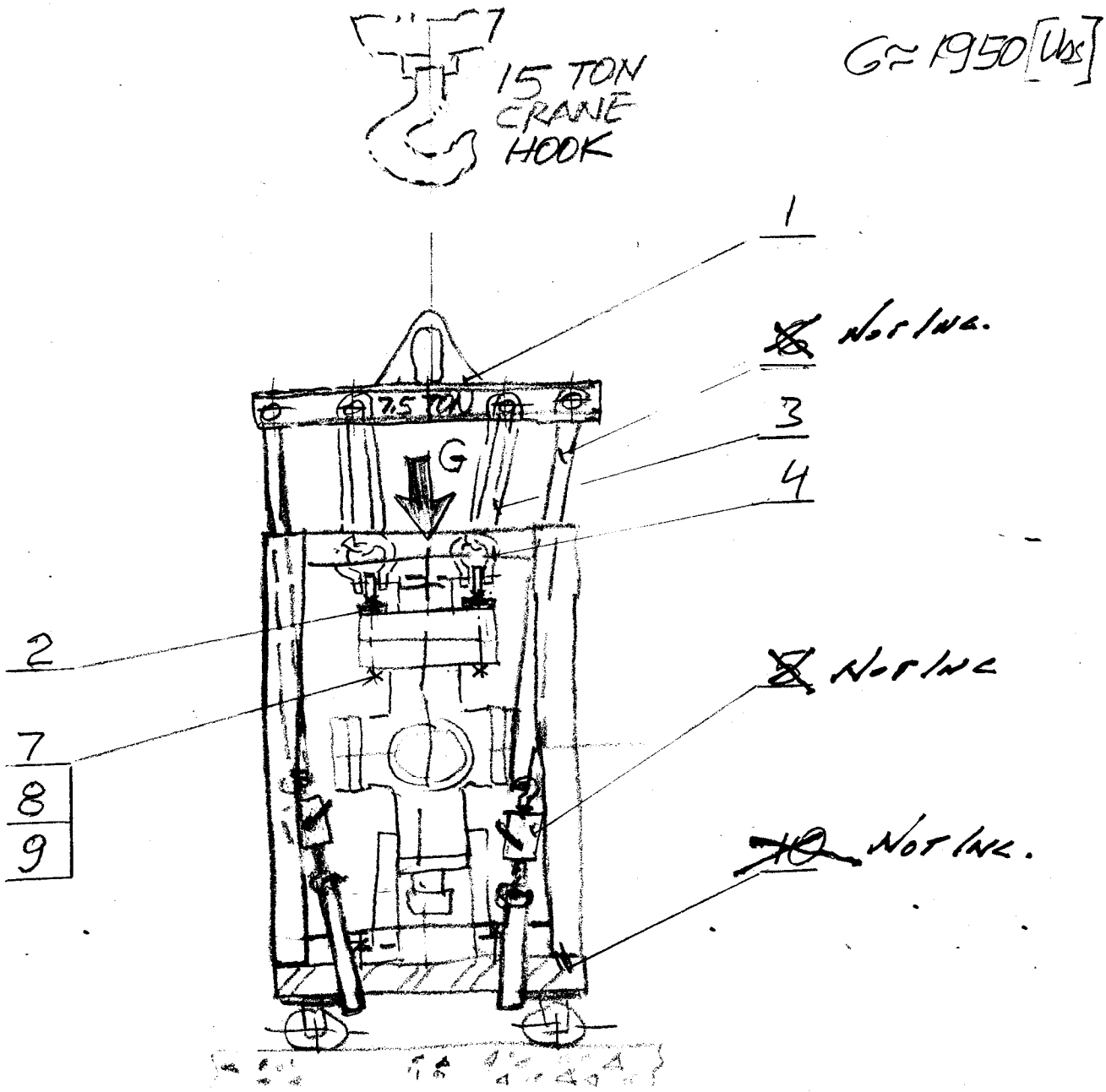

FIG. 2

4.1.2 PARTS ;

1. LIFTING FIXTURE – CAPACITY 7.5 TON SKETCH asz 12.28.04

2. TOP LIFTER — PART OF SKETCH asz 12.28.04

3. SLING – (2 TON - RATED CAP.-MIN.) (2) REQ'D

4. SHACKLE – 5/8" DIA. PIN 2 TON CAP. – MINIMUM (2) REQ'D

Not Included 5. PULLER – 2 TON CAP.-MIN.

Not Included 6. SLING – (2 TON CAP.-MIN.)

7. CAP SCREW 1 1/8"-7 UNC, 6 1/2" LG. GRADE 5 PLAIN STEEL HEX. HEAD "Mc MASTER", PART NO: 91283A151

8. SPRING LOCK WASHER 1 1/8" - SCREW SIZE, 1.847 O.D. 1.153 I.D. 0.281 THICK "Mc MASTER", PART NO: 91101A039

9. HEX NUT 1 1/8"-7 UNC, GRADE 2 PLAIN STEEL "McMASTER" CAT.NO: 90494A139

Not Included 10. "UNISTRUT- INSTALLATION CART" ASSEMBLY; WEIGHT ≈ 450 [lbs]

4.1.3 DESCRIPTION

THE 1 LITER BUBBLE CHAMBER APPARATUS IS BOLTED TO THE STEEL PLATE OF THE "UNISTRUT-INSTALLATION CART" ASSEMBLY (ITEM 10) FIG. 2.
DUE TO UNKNOWN RATING OF THE CONNECTION OF THE BASE PLATE TO SUPPORTIVE LEGS, THE HANDLING WILL INCORPORATE TWO PARTS:

a) APPARATUS ITSELF (~1500 lbs)

b) "UNISTRUT INSTALLATION CART" ASSEMBLY (~450 lbs)

TO CARRY THE LOAD OF "APPARATUS", (2) "TOP LIFTERS" WILL BE BOLTED ON THE TOP FLANGE AS SHOWN ON FIG. 2.
THE INSTALLATION CART WILL BE SUSPENDED FROM THE 7.5 TON LIFTING FIXTURE BY USE OF (2) SLINGS, ITEM 6, AND PULLERS, ITEM 5.
PROPER VERTICAL ORIENTATION HAS TO BE CHECKED AND ADJUSTED BEFORE START UP OF THE TRANSPORTING INTO THE SHAFT.
THE SIMILAR STEPS WILL APPLY FOR TRANSPORTING, AS DESCRIBED IN PREVIOUS SECTIONS OF THIS ELLABORATE.

4.1.4 DETERMINE THE GOVERNING STRESSES

4.1.4.1 SHEAR IN PLANES a-a, b-b

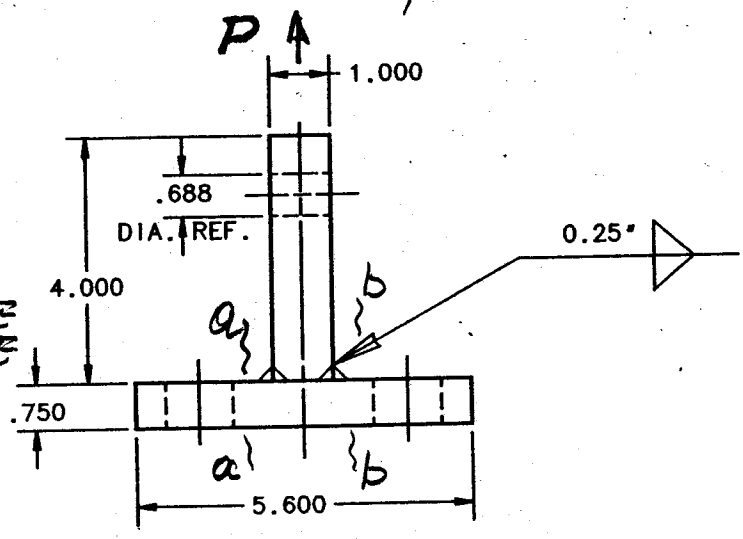

$$P = \frac{1950}{2} = 975$$

P_T – TEST LOAD/SINGLE FIXTURE

$$P_T = 975 \times (1.25)$$

$$P_T = 1218.75$$

$$P_T \approx 1220 \text{ [lbs]}$$

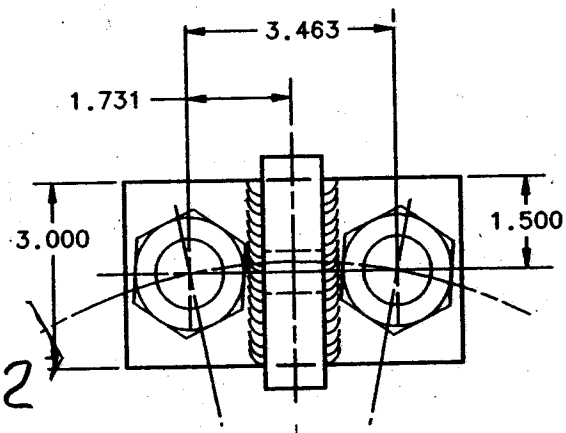

FIG. 3

SHEAR $\tau = \frac{P_T}{A}$

$$A = 0.75(3)2$$

$$A = 4.5 \text{ [in}^2\text{]}$$

$$\tau = \frac{1220}{4.5}$$

$$\tau \approx 280 \text{ [psi]}$$

O.K.

4.1.4.2 STRESS IN THE SECTION C-C AS MARKED IN FIG. 4

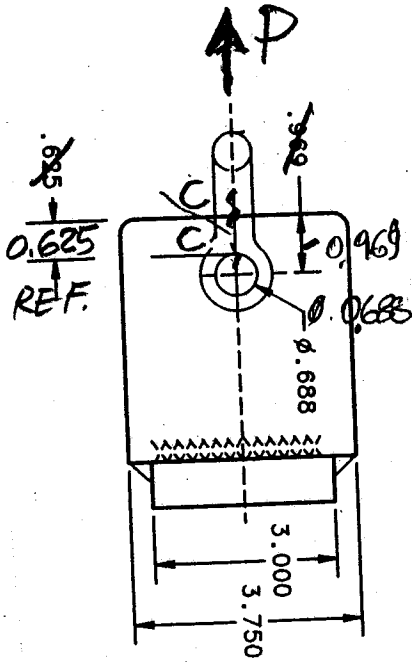

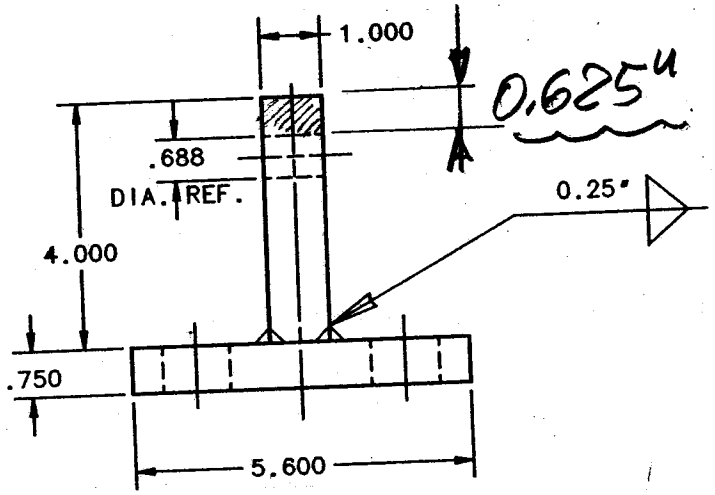

*Assuming shear load only thru the minimum section, the required thickness may be calculated by the formula:

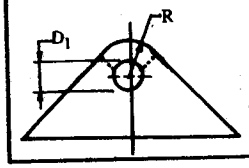

$$t = \frac{P}{2S\ (R-D_1/2)}$$

where t = required thickness of lug, in.
P = load, lbs.
S = allowable shear stress, psi.

See page 440 for design of weld and length of lug.

$t = 1''$

$D_1 = 5/8'' + \frac{1}{32}$

$D_1 = 0.656''$

$P = P_T = 1220$ [lbs]

D_1 — AS FABRICATED AT MAB.

$$R = \frac{0.656}{2} + 0.625$$

$$R \sim 0.953$$

$$1 = \frac{1220}{2S\left(0.953 - \frac{0.656}{2}\right)}$$

$$1 = \frac{1220}{2S\,(0.625)}$$

$$1.25\,S = 1220$$

$$S = \frac{1220}{1.25}$$

$$S = 976 \ [psi]$$

O.K.

FERMILAB
ENGINEERING NOTE

SECTION	PROJECT	SERIAL-CATEGORY	PAGE
			37

SUBJECT

NAME

DATE

REVISION DATE

4.1.4.3 CHECK THE REQUIRED SIZE OF WELDMENT

TOP LIFTER AS WELDED
(4) 0.25" Δ, 3" LG.

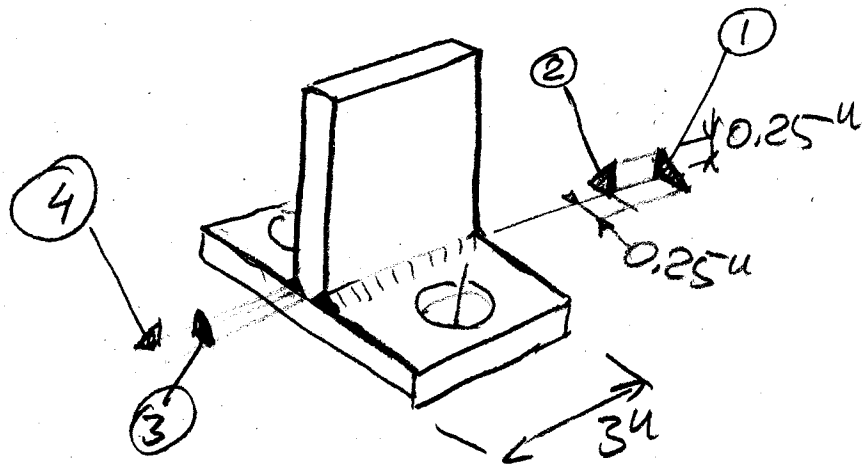

REF. [ ]

For weld proportions used in practice, this variation may be neglected. In a parallel weld, the maximum shear stress is across the throat of the weld where the area is $0.707t$. Hence the shear stress on the side of the weld is 0.707 times $s_{s\,max}$, and the permissible load per linear inch is $0.707t$ times 11,500, or $8{,}130t$ lb. This is the same capacity as that found for a normal weld. However, when the external forces are not collinear, there will be bending in the weld and the permissible load should be reduced 20 per cent to $6{,}400t$. This value has been used in computing the values in Table 28.

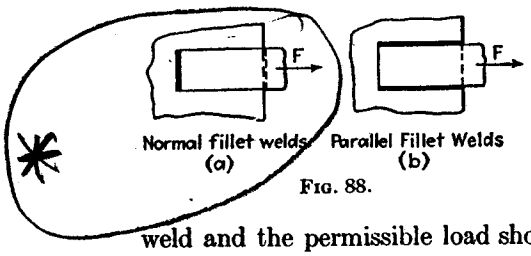

FIG. 88.

TABLE 28.—ALLOWABLE LOADS ON MILD-STEEL FILLET WELDS

Size of weld, in.	Allowable static load per linear inch of weld, lb			
	Bare welding rod		Shielded arc	
	Normal weld	Parallel weld	Normal weld	Parallel weld
$\frac{1}{8}$ by $\frac{1}{8}$	1,000	800	1,250	1,000
$\frac{3}{16}$ by $\frac{3}{16}$	1,500	1,200	1,875	1,500
$\frac{1}{4}$ by $\frac{1}{4}$	2,000	1,600	2,500	2,000
$\frac{5}{16}$ by $\frac{5}{16}$	2,500	2,000	3,125	2,500
$\frac{3}{8}$ by $\frac{3}{8}$	3,000	2,400	3,750	3,000
$\frac{1}{2}$ by $\frac{1}{2}$	4,000	3,200	5,000	4,000
$\frac{5}{8}$ by $\frac{5}{8}$	5,000	4,000	6,250	5,000
$\frac{3}{4}$ by $\frac{3}{4}$	6,000	4,800	7,500	6,000

THE APPLIED TYPES, AS FABRICATED ARE O.K.

REV	DESCRIPTION	DRAWN	DATE
		APPROVED	DATE

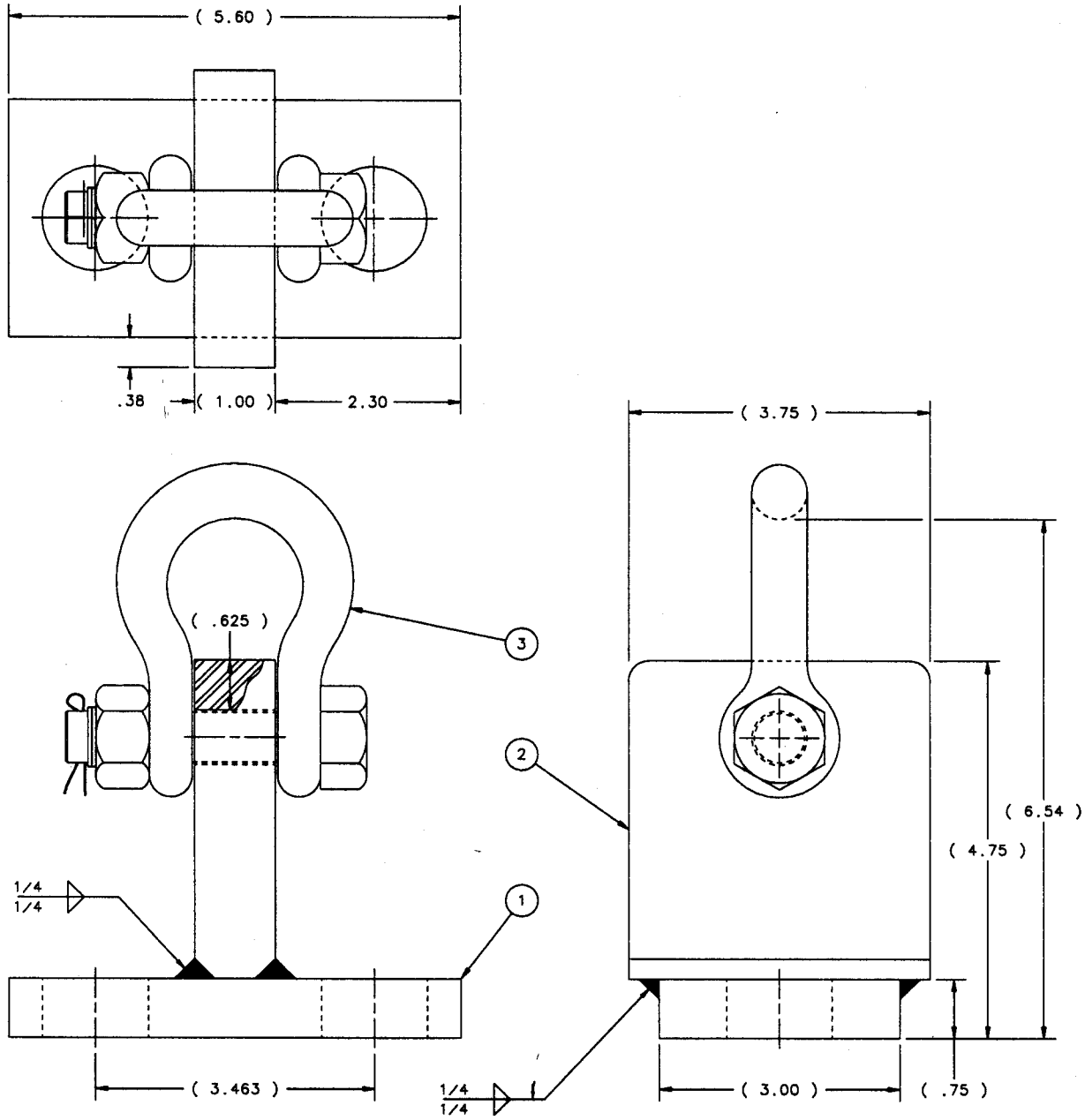

ITEM	PART NO.	DESCRIPTION OR SIZE	QTY.
3	COML	SHACKLE, BOLT TYPE ANCHOR, CROSBY 5/8 NOM. SIZE, 3.25 TON CAP. #1019490	1
2	MB-435218	PLATE	1
1	MB-435217	PLATE	1

PARTS LIST

UNLESS OTHERWISE SPECIFIED			ORIGINATOR	A.SZYMULANSKI	28-JAN-2005
.XX	.XXX	ANGLES	DRAWN	V.MAJDANSKI	28-JAN-2005
± .03	± ---	± ---	CHECKED		
			APPROVED		

1. BREAK ALL SHARP EDGES .015 MAX.
2. DO NOT SCALE DRAWING.
3. DIMENSIONS BASED UPON ASME Y14.5M-1994
4. MAX. ALL MACH. SURFACES 125
5. DRAWING UNITS: U.S. INCH

USED ON

MATERIAL: SEE PARTS LIST ABOVE

FERMI NATIONAL ACCELERATOR LABORATORY
UNITED STATES DEPARTMENT OF ENERGY

1 LITER BUBBLE CHAMBER-COUPP LIFTING FIXTURE ASSEMBLY

SCALE	DRAWING NUMBER	SHEET	REV
FULL	9219.000-MC-435219		

CREATED WITH : Ideas9m3 GROUP: PPD/MECHANICAL DEPARTMENT

PAGE 40

1 LITER BUBBLE CHAMBER, "TOP LIFTER" TEST ARRANGEMENT
SKETCH: QSZ 01.24.05

TECHNICAL CRITERIA

- WEIGHT OF TRANSPORTED OBJECT: G = 1,950. [lbs]
- ASSUMED DECELLERATION IMPACT (SUDDEN STOPPAGE) - 1.5g [g - gravity acceleration]
- TEST LOAD = (1.5) G (1.25)
  WHERE: 1.25 = FERMILAB STANDARD NUMBER FOR STATIC LOAD TESTS

TEST LOAD = 3656.25 [lbs]

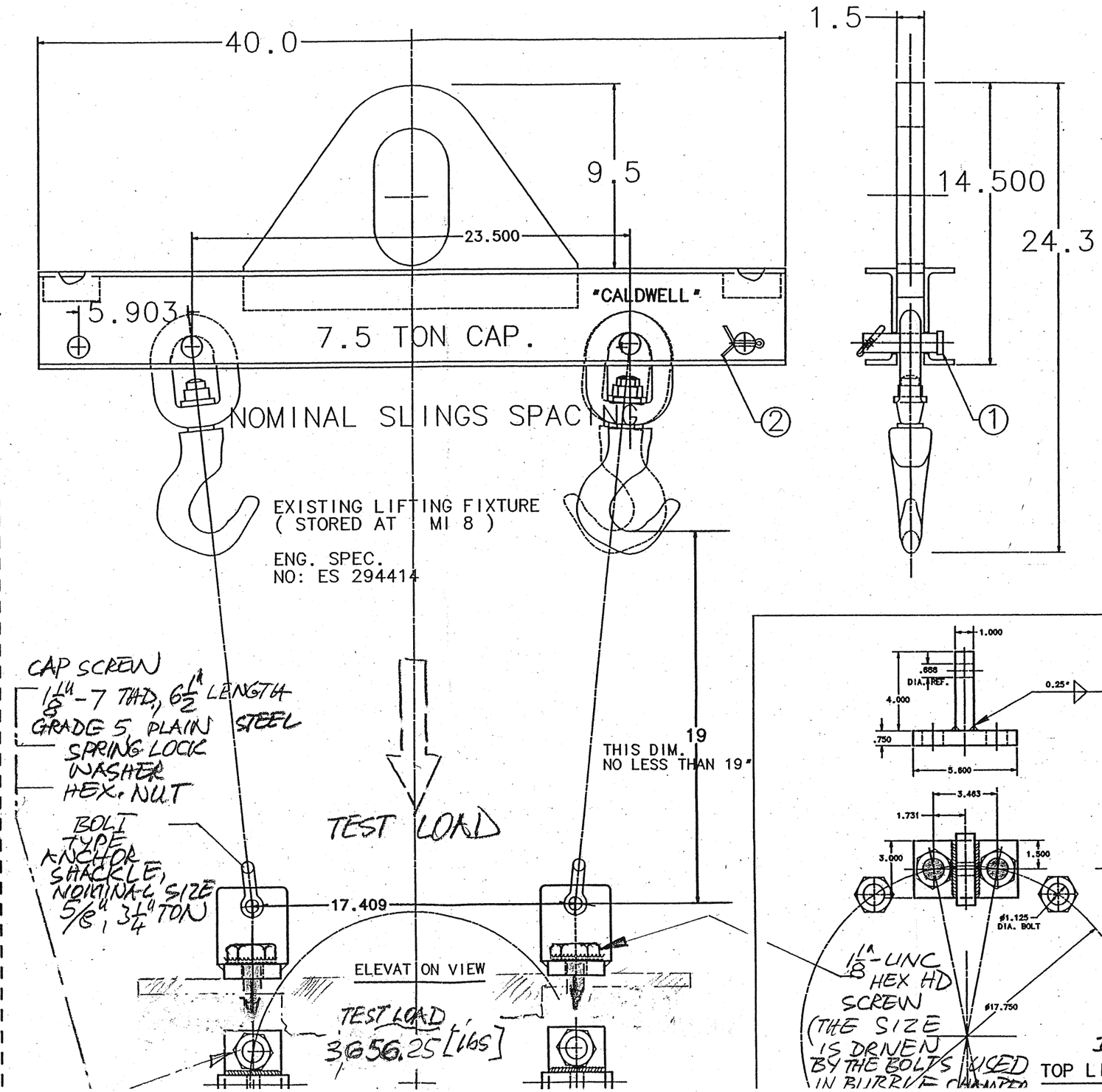

DWG.: TOP LIFTER