BELOW-THE-HOOK LIFTING DEVICE
Engineering Note Cover Page

Lifting Device Numbers:

FNAL Site No/ _____ (If applicable) Div. Specific No. 143 (If applicable) Asset No. _____ (If applicable)

ASME B30.20 Group: (check one)
- [ ] Group I Structural and Mechanical Lifting Devices
- [ ] Group II Vacuum Lifting Devices
- [ ] Group III Magnets, Close Proximity Operated
- [ ] Group IV Magnets, Remote Operated

Device Name or Description NuMI Upstream Vacuum Decay Pipe End Installation Fixture

Device was (check all applicable)
- [ ] Purchased from a Commercial Lifting Device Manufacturer. Mfg Name _____
- [ ] Designed and Built at Fermilab
- [ ] Designed by Fermilab and Built by a Vendor. Assy drawing number _____
- [ ] Provided by a User or other Laboratory
- [ ] Other: Describe _____

Engineering Note Prepared by Dave Pushka Date 7-17-2003

Engineering Note Reviewed by Ang Lee Date 7-22-2003

Lifting Device Data:

Capacity 850 # (Weight of Upstream Vacuum Decay Pipe End)

Fixture Weight ~ 244 #

Service: [X] normal [ ] heavy [ ] severe (refer to B30.20 for definitions)

Duty Cycle N/A 8, 16 or 24 hour rating (applicable to groups III, and IV)

Inspections Frequency Once, before 1 time use

Rated Load Test by FNAL (if applicable) Date 8-27-03 Load 1200 #

[ ] Check if Load Test was by Vendor and attach the certificate

Satisfactory Load Test Witnessed by: John Voirin I.D. 4940

Signature (of Load Test Witness) John L Voirin

Notes or Special Information:

NOMI VACUUM DECAY PIPE | 17 JULY 2003 | DAVE PUSHKA

U.S. END INST. FIXTURE

(N.V.D.P. U.S. END INST. FIX)

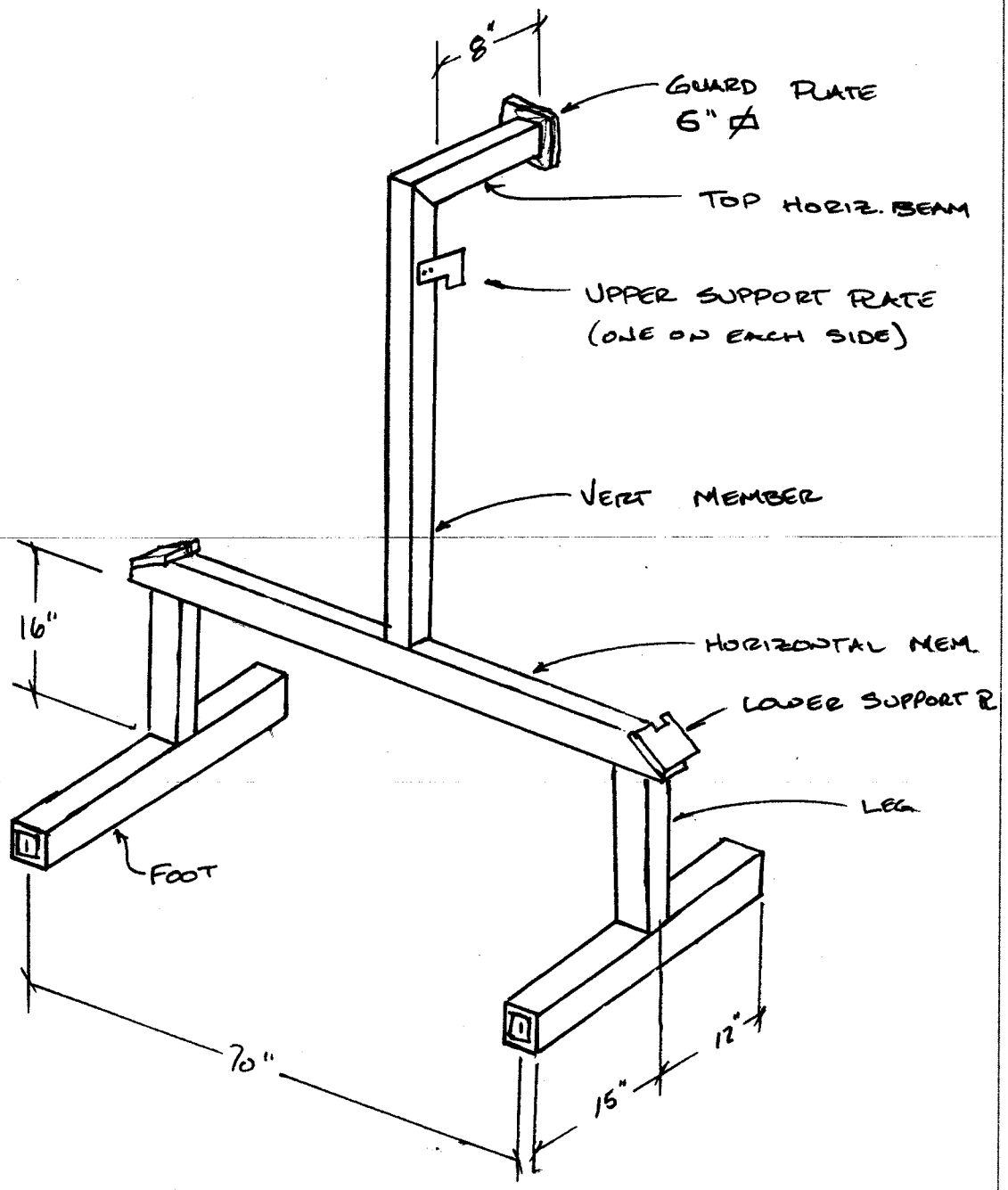

ALL MEMBERS ARE 4"×4"×1/4" BOX SECTION UNLESS OTHERWISE NOTED.

NuMI U.S. Val. Delay | 11 July 2003 | D. Pushka

PIPE END INST. FIXTURE

END VIEW —

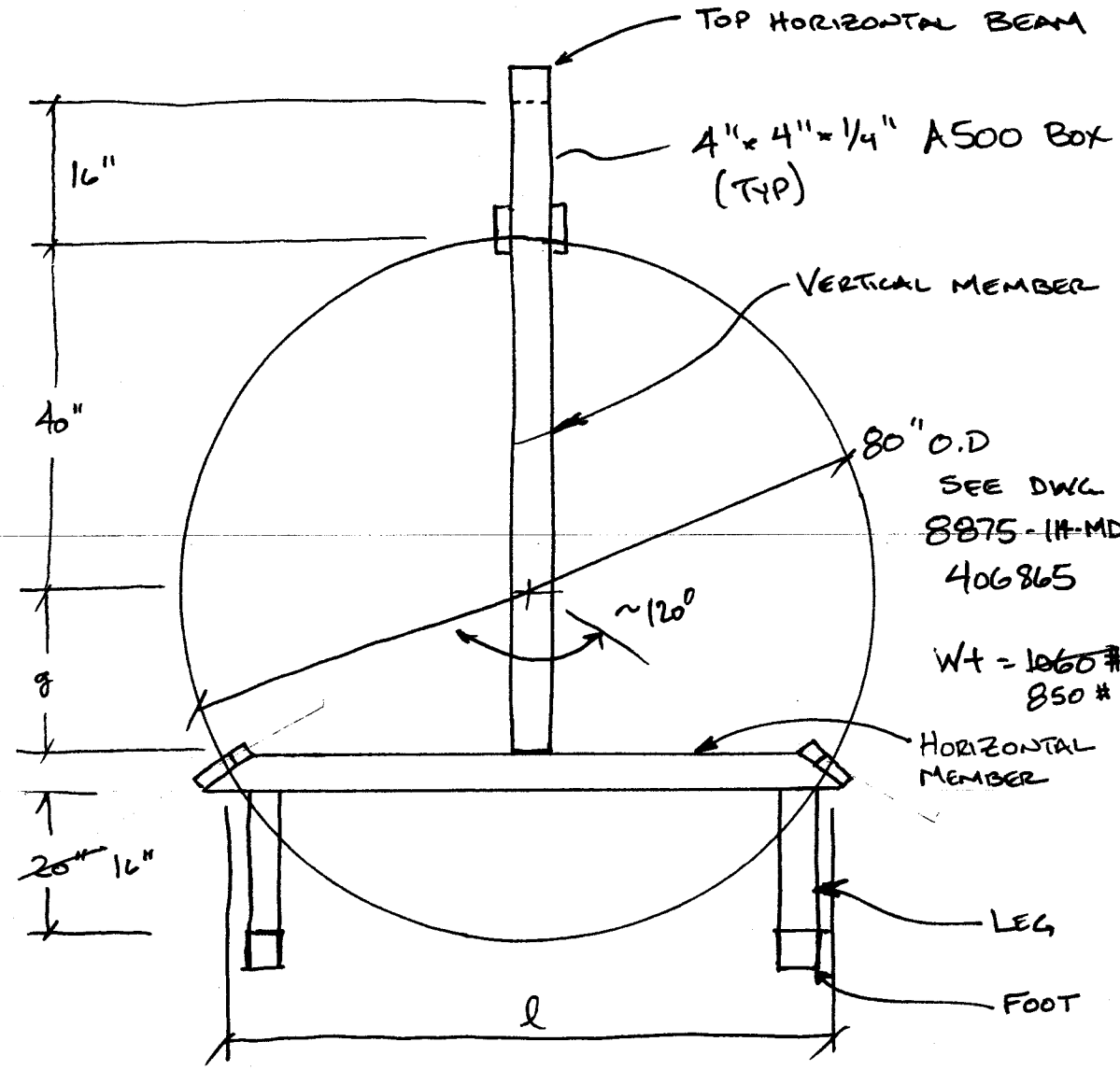

$$l = 2R\sin\frac{\theta}{2} \qquad \theta = 120^\circ, \quad R = 40''$$

$$l = 70''$$

$$g = 40 \sin 30^\circ = 20''$$

NuMI U.S. Vac. Decay Pipe End | 11 July 2003 | D. Pushka

Pipe End Inst. Fixture

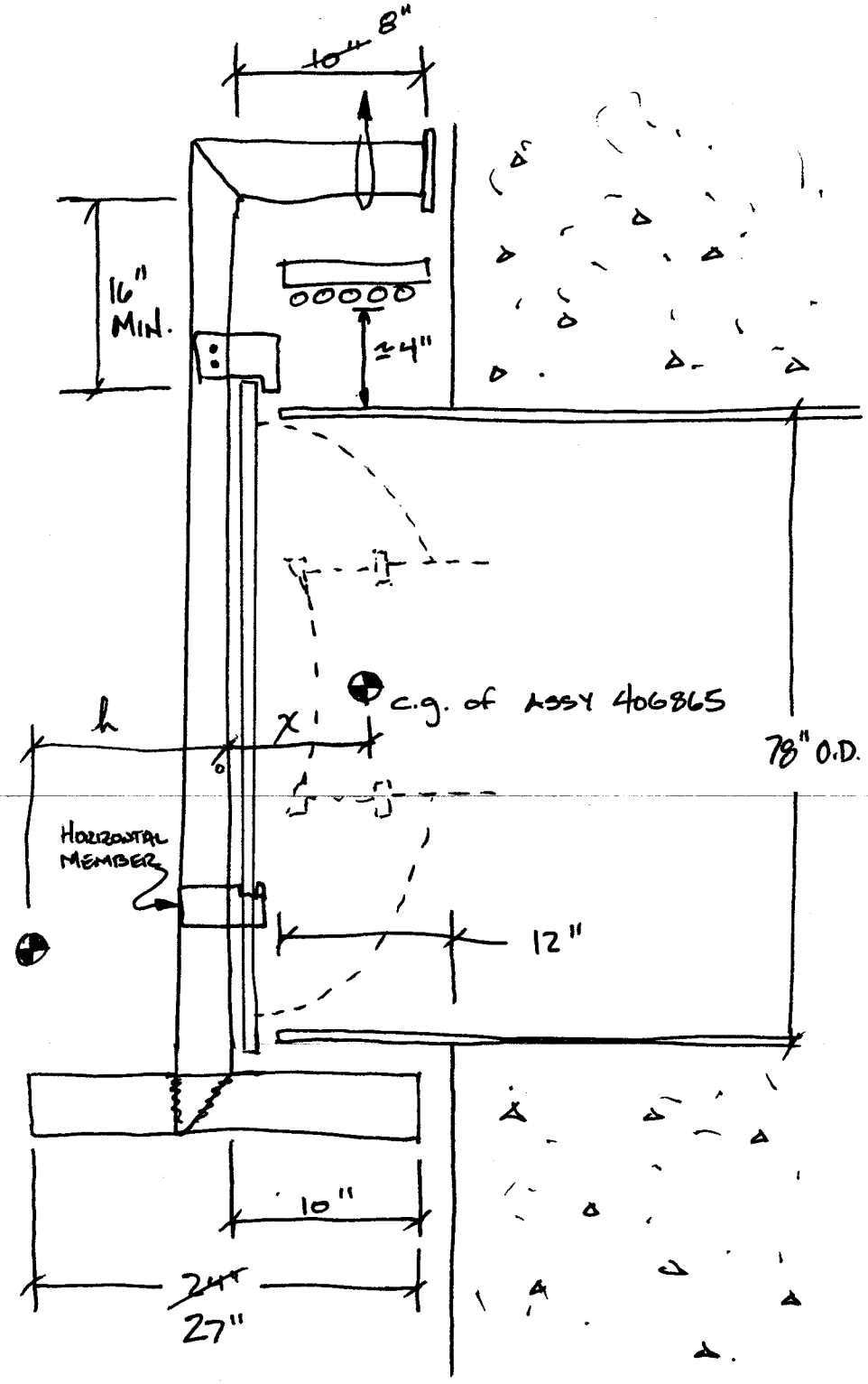

Side View

WEIGHTS:

ITEM ① SEMI ELLIPTICAL HEAD

O.D = 77 IN ∴ R = 38.5 IN

KR = 19.303 IN ∴ K = 0.50

I.D = 76.25 IN R = 38.125

KR = 19.303 - .375 = 18.928 → K_1 = 0.49647

$$V = \tfrac{2}{3}\pi K R^3$$

$$V_{OD} = \frac{2}{3}\pi(0.5)(38.5)^3 = 59{,}760 \text{ in}^3$$

$$V_{ID} = \frac{2}{3}\pi(0.49647)(38.125)^3 = 57{,}621.0 \text{ in}^3$$

$$\Delta V = 2138 \text{ in}^3 = \text{VOL OF STEEL}$$

$$= 1.2378 \text{ ft}^3 \quad @ \ 490 \#/\text{ft}^3$$

$$\therefore W = 606.5 \#$$

THIS IS FOR RAW HEAD, W/O 42" HOLE

HOLE - 69.3" RADIUS SPHERE

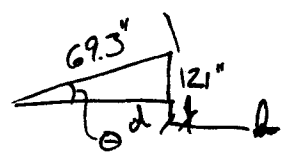

$\sin\theta = \frac{21}{69.3} \Rightarrow$

$\theta = 17.6$

$d = 66.2$

$h = 69.3 - 66.2 = 3.1$

$A = \pi D h$:

$= \pi(69.3)(3.1) = 674.8 \text{ in}^2$

$V = (.375)(674.8) = 253 \text{ in}^3$

$Wt_{HOLE} = 71.7 \#$

$\therefore$ NET Wt (w/HOLE) = (606.5 - 71.7) = 534.7 #

Weights continued:

Item (2) Al Ring - MC-4069000

44" O.D.
39" I.D
1" Thick

w/ 17° bevel

$$V = \frac{\pi}{4}(1")(44^2 - 39^2) = 325.9 \text{ in}^3$$

less bevel:

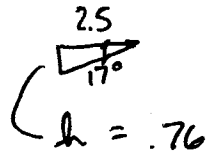

$$V_{bevel} = \frac{1}{2}(2.5 \times .76) = .95 \text{ in}^2$$

$$V_{REC} = 2.5 \times 1" = 2.5 \text{ in}^2$$

$$V_{w/o\ bevel} = \frac{(2.5 - .95)}{2.5} \times 325.9 \text{ in}^3$$

$$= 202 \text{ in}^3$$

@ 170 #/ft³ → W = 19.87 #

WEIGHTS CONTINUED:

ITEM 3

AL SHEET PER MC-406901

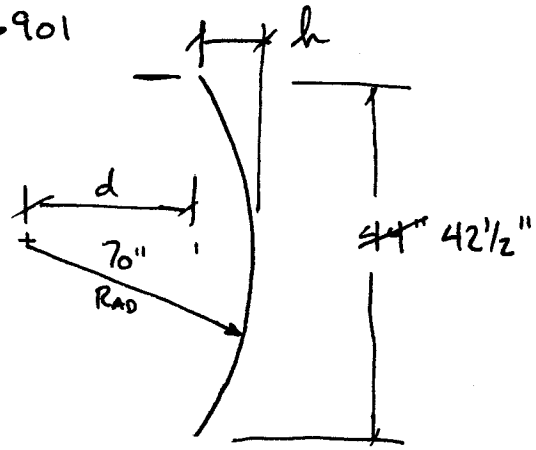

$$d = \frac{1}{2}\sqrt{4R^2 - l^2}$$

$$= \frac{1}{2}\left(4(70^2) - 42.5^2\right)^{1/2}$$

$$= 66.69$$

$$h = R - d = 70 - 66.69 = 3.30''$$

Surface area $= 2\pi R h$

$$= 2\pi \cdot 70_{in} \cdot 3.30_{in} = 1452.9_{in^2}$$

$$\text{Vol} = 1452.9_{in^2} \times 0.063_{in} = 91.5_{in^3}$$

$$W = \frac{91.5_{in^3}}{1728_{in^3/ft^3}} \times 170_{\#/ft^3} = 9.0\#$$

WEIGHT OF AL SHEET = 9.0 #

WEIGHTS CONTINUED:

ITEM (4) 42" O.D. * 6" LONG * 3/8" THK

SEE MC-406896

$$V_{OL} = \frac{\pi}{4}\left(42^2_{in} - 41.25^2_{in}\right) \cdot 6\,in = 294\,in^3$$

$$W_t = \frac{294\,in^3}{1728\,in^3/ft^3} * \overset{170}{\cancel{490}}\,\#/ft^3 = \cancel{83.4}\,\#$$

$$= 29.2\,\#$$

ITEM (5) SEE MC-406903 TRANSITION RING.

44" O.D. * 39" I.D

3/4" STEEL , 3/4" ALUMINUM

$$V_{STEEL} = V_{AL} = \frac{\pi}{4}\left(44^2 - 39^2\right) \cdot 0.75 = 244\,in^3$$

$$W_{t_{Fe}} = \frac{244}{1728} * 490 = 69\,\#$$

$$W_{t_{AL}} = \frac{244}{1728} * 170\,\#/ft^3 = 24\,\#$$

ITEM (6) SEE MC-406902

JUST LIKE ITEM (4) BUT STEEL @ $\rho = 490\,\#/ft^3$

$$\therefore W_t = 83.4\,\#$$

WEIGHT CONTINUED:

ITEM 7 SEE MC-406898

80" O.D
77" I.D.
1.0" THK

$$V_{ol} = \frac{\pi}{4}(80^2 - 77^2) \cdot 1'' = 369 \text{ in}^3$$

$$W_t = \frac{369 \text{ in}^3}{1728 \text{ in}^3/\text{ft}^3} \times 490 \text{ \#/ft} = 104.9 \text{ \#}$$

CENTER OF GRAVITY:

ITEM	Wt	APPROX 'd' FROM DATUM TO C.G.	Wt × d
1	534.7	~10"	5347
2	19.87	~3½	69.5
3	9	~4½	40.5
4	29.2	6½	189
5 AL	24	9¾	234
5 STEEL	69	10½	724.5
6	83.4	14"	1167.6
7	104.9	½"	52.45
			7825 IN-LBS
	874.0 #		

$$\therefore \quad x = \frac{7825}{874} = 8.95''$$

NOTE: THE 874 # WT IS LOWER THAN THE 1060 # WEIGHT MEASURED FOR THE COMPLETED ASSEMBLY.

7/16/03 - WEIGHED THE END - W/ THE 1000 # SCALE, IT MEASURED 850 #
MEASURED 980 # W/ 2000 # SCALE

N.U.S.V.D.P. END INST FIXT. | 16 JULY 2003 | DAVE PUSHKA

EMPIRICAL CENTER OF GRAVITY:

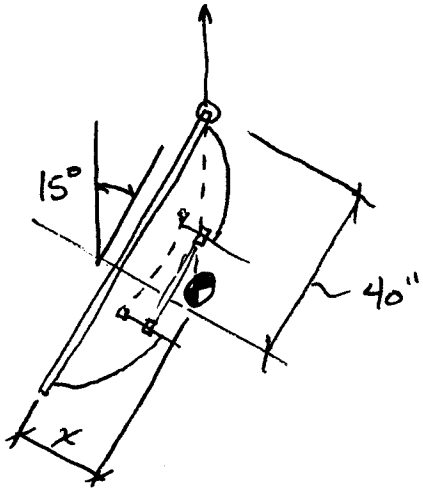

ON 7/16/03, THE END WAS LIFTED & THE ANGLE MEASURED @ 15°

FIND: x

$$\tan 15° = \frac{\text{OPPOSITE}}{\text{ADJACENT}} = \frac{x}{40}$$

$$x = 10.71''$$

CONSIDER HOW FIXTURE AFFECTS C.G.

FIXTURE USES 20' OF 4"×4"×1/4" BOX @ 12.21 #/FT ⇒ W_{FIX} = 244 #

C.G. OF FIXTURE:

ITEM	length	DATUM TO C.G. OF ITEM	Wt × d
TOP	8"	4"	$\frac{8}{240} \times 244 \times$ 4
VERT	76"	-2"	$\frac{76}{240} \times 244 \times$ × -2
HORZ	70"	-2"	$\frac{70}{240} \times 244 \times$ × -2
LEG	32"	-2"	$\frac{32}{240} \times 244 \times$ × 2
FEET	27"	-3.5"	$\frac{27}{240} \times 244 \times$ × -3.5
			- 425.475 in-LBS.

$$X_{FIX} = \frac{-425.475}{244} \frac{\text{in-LBS}}{\text{LBS}} = -1.74''$$

∴ C.G. OF FIXTURE + END:

$$X' = \frac{(875 \times 10.71) + (244 \times -1.74)}{875 + 244} = 7.99''$$

N.U.S.V.D.P END INST FIX | 16 JULY 2003 | DAVE PUSHKA

DETERMINE COUNTER WT NEEDED @ BOTTOM OF FEET TO GET $x = 1''$

$$1'' = \frac{(875^{\#} * 10.71^{in}) + (244^{\#} * -1.74^{in}) + (W^{\#} * -18^{in})}{875^{\#} + 244^{\#} + W^{\#}}$$

$$1''(1119^{\#} + W^{\#}) = 8946.7 + (-18W)$$

$$1119 \text{ in-LBS} + W \text{ in-LBS} = 8946.7 \text{ in-LBS} - 18W \text{ in-LBS}$$

$$19W \text{ in-LBS} = 7827.7 \text{ in-LBS}$$

$$W = 411.98\ \# \quad @\ 1 \text{ INCH}$$

$\therefore$ USE A ~400# COUNTER WEIGHT @ END OF FEET.

CONSIDER REACTIONS @ END OF HORIZONTAL MEMBER:

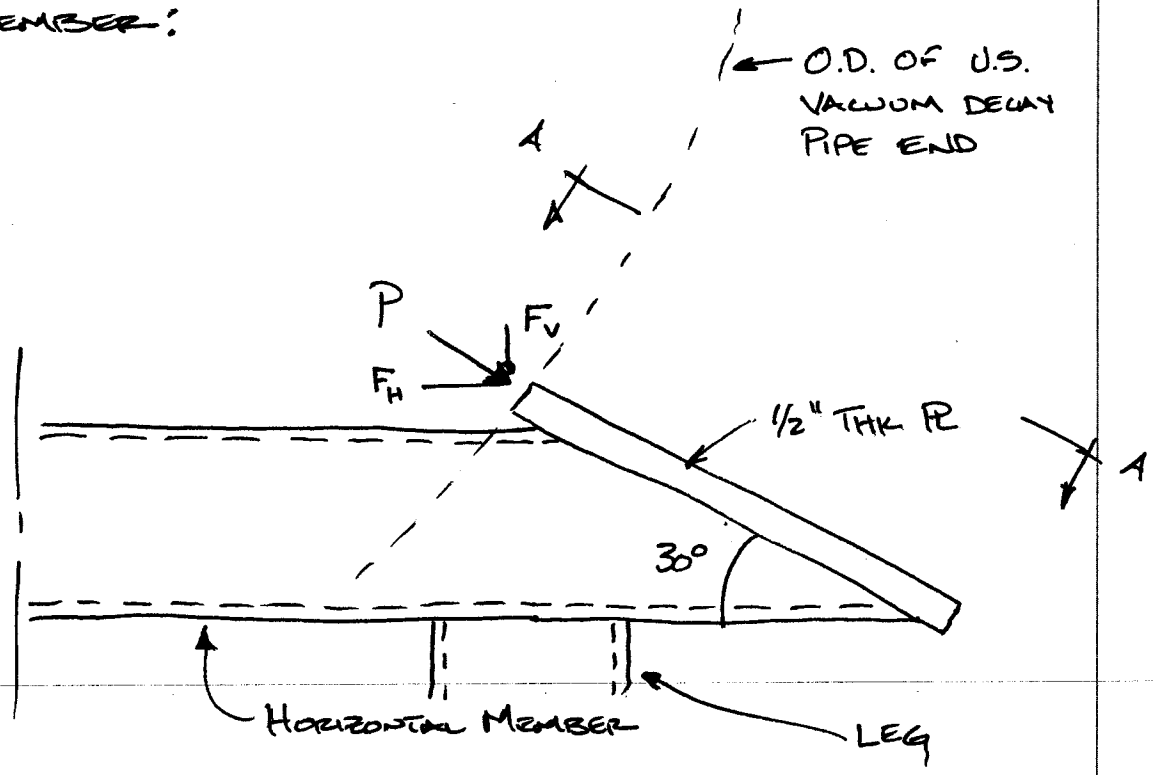

$2F_V$ = WEIGHT OF U.S. END. = ~~1060~~ # 850

$\therefore F_V$ = ~~535~~ # 425#

$P \sin 30° = F_V$ = ~~530~~ # 425#

$P(0.5) = F_V$ = ~~530~~ # 425#

P = ~~1060~~ # 850#

$F_H = P \cos 30°$ = ~~1060~~ # 850 # $\cos 30°$ = 736#

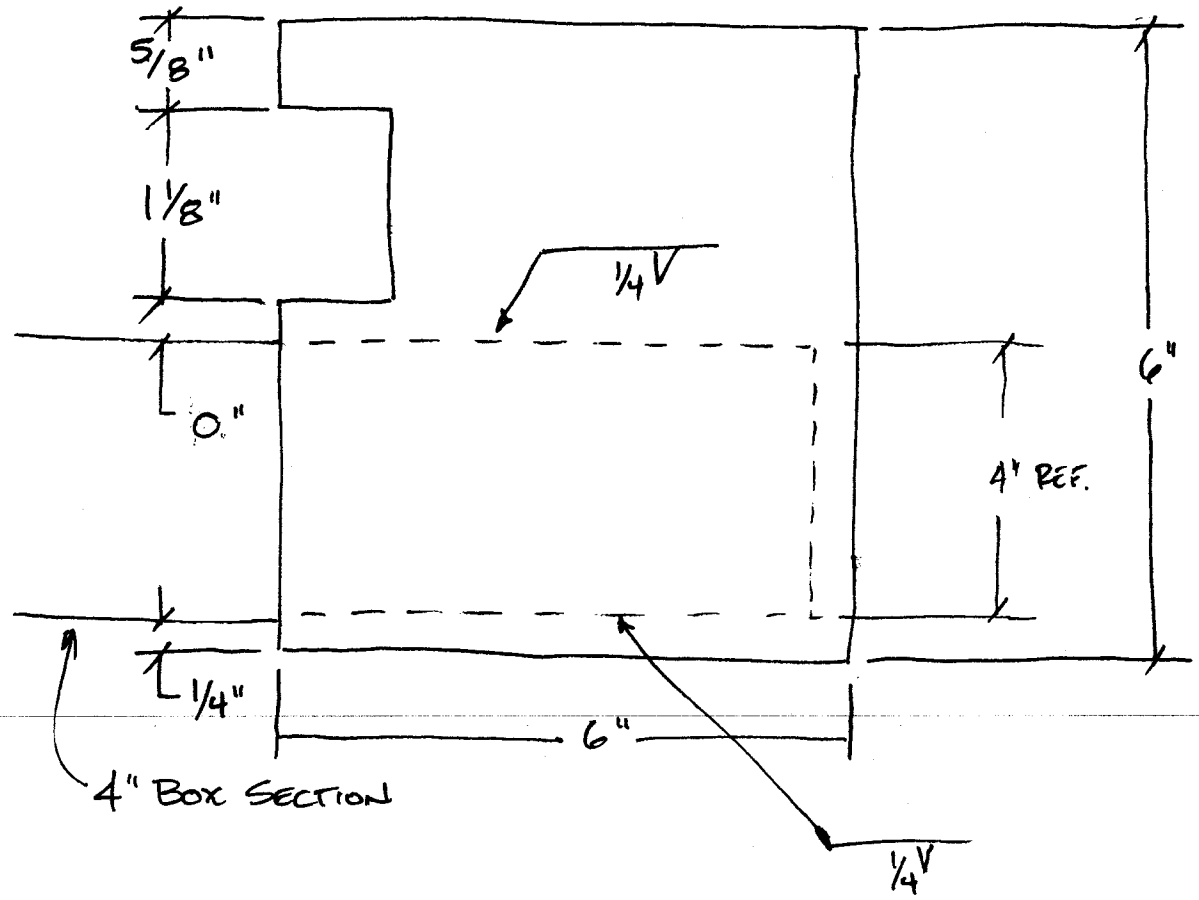

VIEW A-A.

DETAIL OF LOWER SUPPORT PLATE (TYP 2x)

CONSIDER HORIZONTAL BEAM COMBINED STRESSES

BENDING STRESS (WHEN SUPPORTED BY VERT. MEM.)

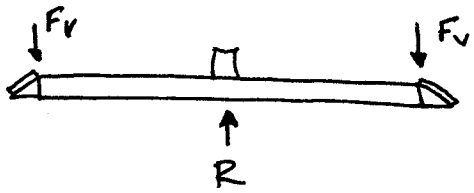

F_V = ~~530~~ # 425# , R = ~~1060~~ # 850 + Wt OF FIXTURE + COUNTER wts.

ASSUME FIXTURE WEIGHS 300 #

" COUNTER WEIGH IS 500 #

$\therefore$ R = 1060 + 300 + 500 = ~~1850~~ # 1650

USE R = 2000 #

$$M = \frac{Pl}{4} = \frac{(2000\#)(70'')}{4} = 35000 \text{ IN-LBS}$$

$$\sigma = \frac{My}{I}$$

IF 4" x 4" x 1/4" BOX IS USED, I = 6.59 , y = 2

$$\sigma = \frac{(35000)\,2}{\cancel{6.59}\ 8.22} = \cancel{10,622}\ 8,515 \text{ PSI}$$

CONSIDER HORZ. BEAM STRESSED, CONT

AXIAL STRESS: $F_H = 736\#$, $A_T = 3.59\ in^2$

$$\sigma_{AXIAL} = \frac{F}{A} = \frac{736}{3.59} = 205\ psi$$

STRESS ADD

$$\sigma_{COMBINED} = \sigma_{BENDING} + \sigma_{AXIAL}$$

$$= \overset{8515}{\cancel{10,622}} + 205$$

$$= \cancel{10,827\ psi}\quad 8720.8\ PSI$$

$$\sigma_{ALLOWABLE} = \frac{F_y}{3} = \frac{46,000\ psi}{3} = 15,333\ psi$$

∴ STRESS IN HORZ. BEAM IS BELOW THE ALLOWABLE STRESS

CONSIDER STRESSES IN VERTICAL MEMBER –

BENDING
W/O
COUNTER-WT.

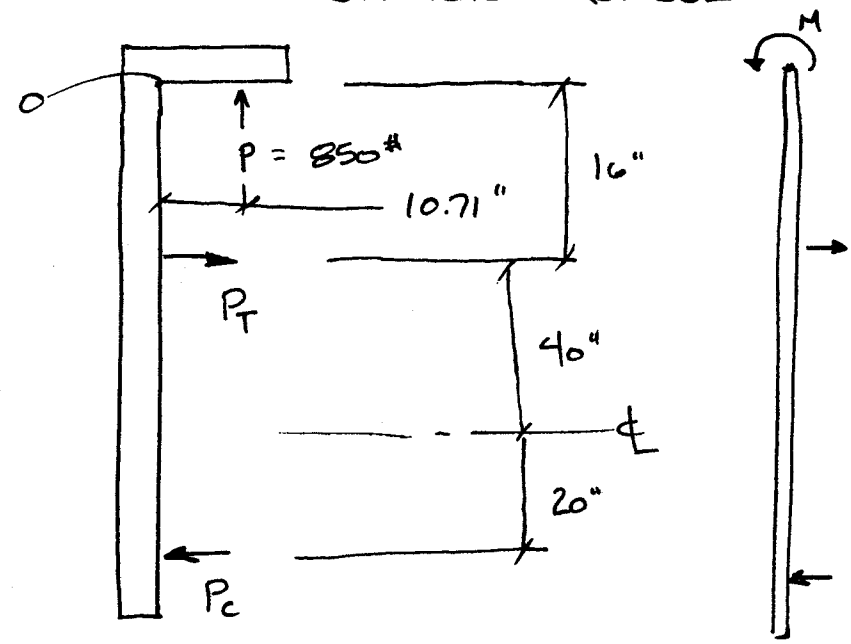

$$M = (850\#)(10.71\text{ in}) = 9103.5 \text{ in-LBS}$$

$$\sigma_B = \frac{My}{I} = \frac{(9103.5 \text{ in-LBS})(2")}{8.22 \text{ in}^4} = 2214.9 \text{ psi}$$

FIND P_T & P_C

$$\Sigma M_o = 0 = (+850\#)(10.71") + P_T(16") - P_C(76")$$

$$P_T = P_C$$

$$\frac{(850)(10.71)}{60} = P_C = 151\# = P_T$$

COMBINED STRESSES IN VERTICAL MEMBER

$\sigma_B = 2214.9$ psi

$\sigma_{TENSION} = \frac{P}{A}$

P = Wt OF HEAD + FIXTURE + COUNTER BAL

= 850# + 300# + 500#

= 1650#

A FOR 4" x 4" x 1/4" BOX = 3.59 in^2

$\sigma_T = \frac{P}{A} = \frac{1650}{3.59} = 459$ psi

$\sigma_{COMBINED} = \sigma_B + \sigma_T = 2214.9 + 459 = 2674.5$ psi

$\sigma_{ALLOW} = \frac{F_y}{3} = \frac{46{,}000}{3} = 15{,}333$ psi

$\sigma_{COMB} < \sigma_{ALLOW}$ ∴ OK

STRESSES IN FEET.

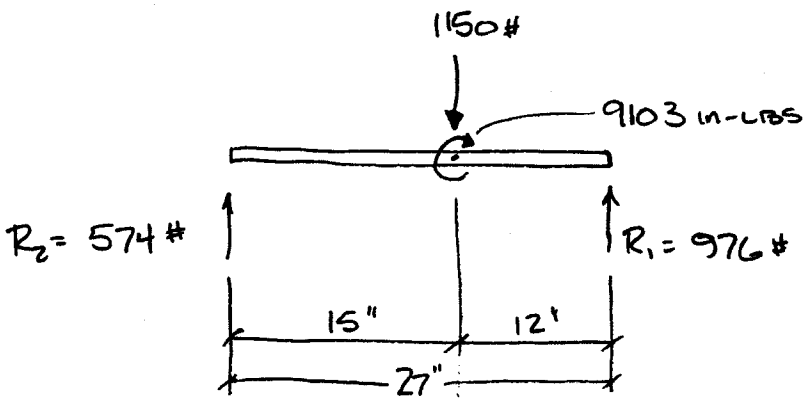

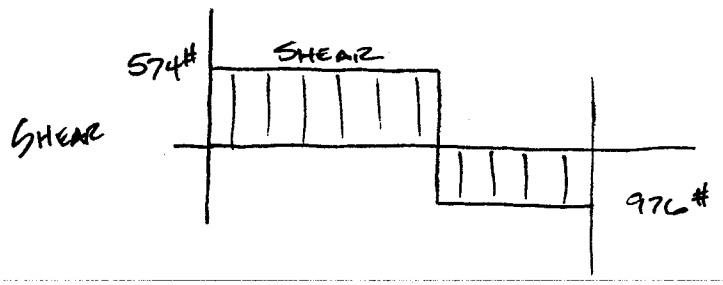

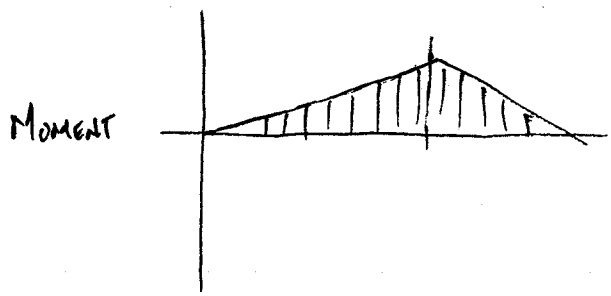

$$M_{TOTAL} = \frac{Pab}{l} + M = \frac{(1150)(15)(12)}{27} + 9103$$

$$= 16{,}769 \text{ in-LBS}$$

$$\sigma_B = \frac{My}{I} = \frac{16{,}769 \text{ (in-LBS)} * 2 \text{ IN}}{8.22 \text{ in}^4} \quad 4080 \text{ psi}$$

$$\sigma_B < \sigma_{ALLOW} \quad \therefore \text{ OK}$$

CONSIDER STRESSES IN LEGS:

AXIAL LOAD = Wt OF END (~~1060~~ 850#) + FIXTURE

$= \cancel{1060}\ 850 + 300$

$= \cancel{1360}\ \# = 1150\#$

$\sigma_{AXIAL} = \frac{1150}{3.59} = 320$ psi

$M = (850\#)(10.71\text{ in}) = 9103$ ~~psi~~ IN-LBS

BENDING –

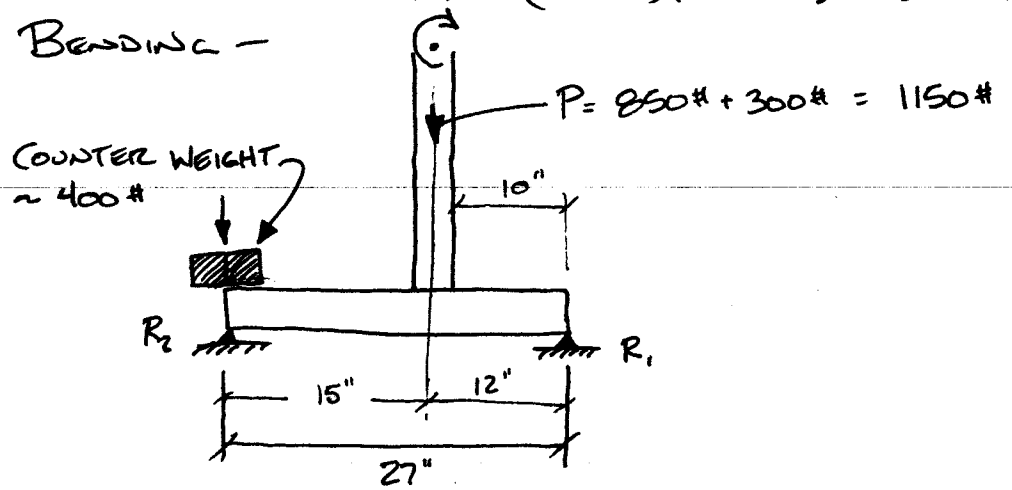

$\Sigma M_{R_1} = 0 = -M + (400\#)27'' - R_2(27'') + 12(1150)$

$= -9103 + 10{,}800 - 27R_2 +$

$27R_2 = \cancel{1697\#}\ 15{,}497$

$R_2 = \cancel{628}\#\ 573.96\#$

$\Sigma M_{R_2} = 0 = +M - 27''R_1 + 1150(15)$

$R_1 = \frac{26{,}353}{27} = 976\#$

CONSIDER TOP HORIZONTAL BEAM

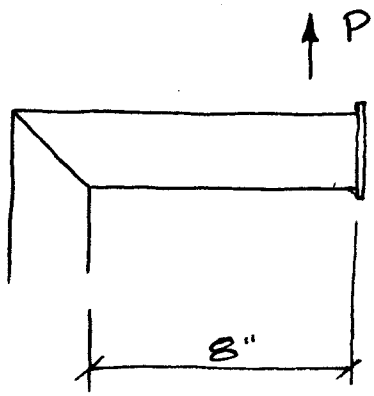

P = WT OF HEAD + WT OF FIXTURE + COUNTER WT

= 850 + 300 + 500 = 1650 #

ASSUME, P IS APPLIED @ FAR END OF TOP HORZ BEAM

$\therefore M = Pa = (1650\#)(8\text{ in}) = 13200 \text{ in-LBS}$

$$\sigma_B = \frac{My}{I} = \frac{(13{,}200 \text{ in-LBS})(2\text{ in})}{8.22 \text{ in}^4} = 3211.6 \text{ psi}$$

$$\sigma_{allow} = \frac{F_y}{3} = \frac{46{,}000}{3} = 15{,}333 \text{ psi}$$

$\sigma_B < \sigma_{Allow} \therefore$ OK

UPPER SUPPORT PLATE – 1/2" THICK STEEL

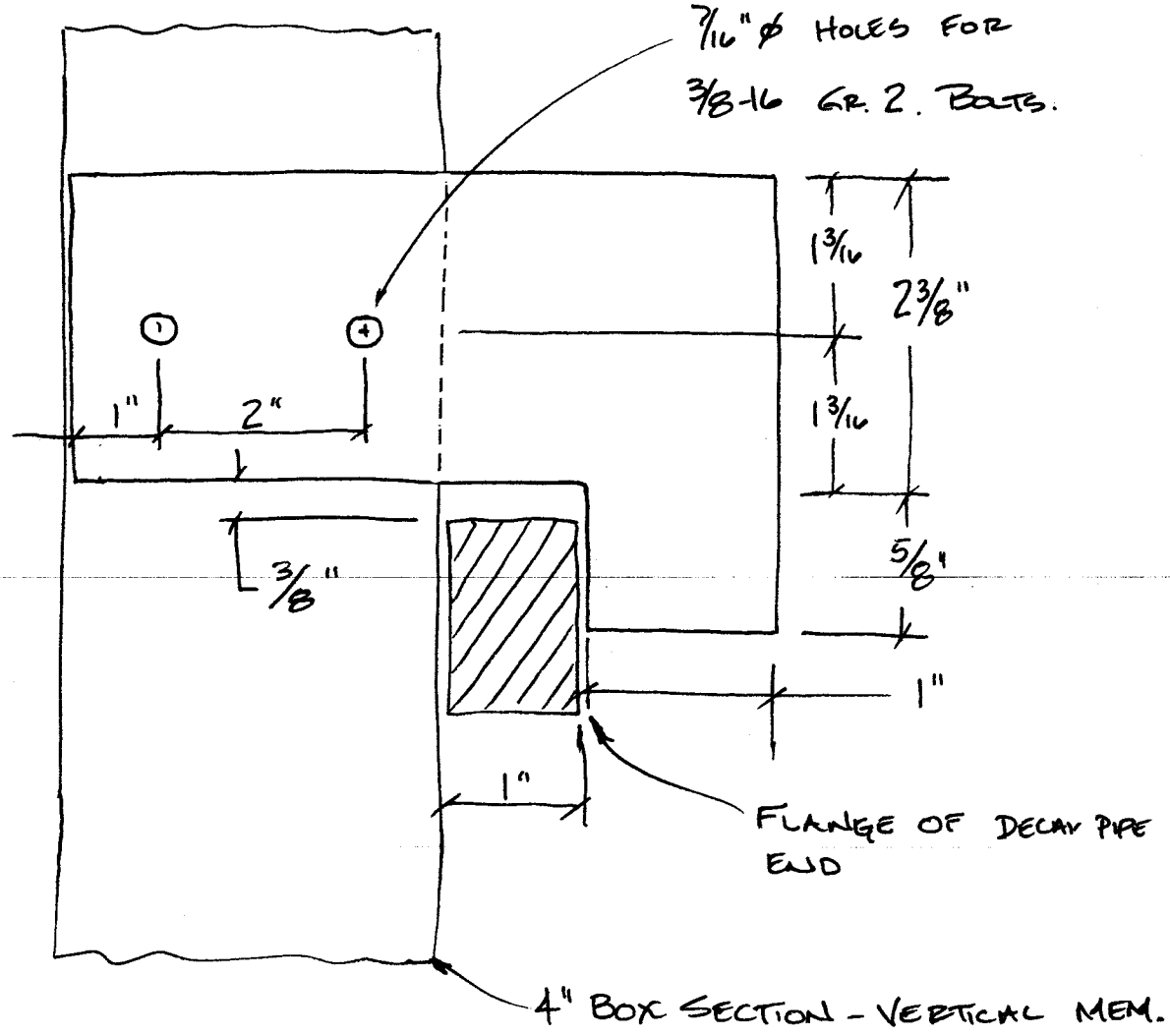

LOAD AWAY ~~FR~~ FROM FIXTURE IS 151 #

DESIGN UPPER SUPPORT PLATE FOR A LOAD OF 500 # TO ACCOMODATE DYNAMIC LOADS.

SHEAR - σ_{ALLOW} FOR GR 2 BOLTS = $\frac{45{,}000}{3} = 15{,}000$ psi

$P = 500\#$ $\therefore A = \frac{P}{\sigma} = \frac{500}{15{,}000} = 0.033\,in^2$

TRY (2) 3/8" BOLTS

$A = \frac{\pi}{4} * 2 * .375^2 = 0.22\,in^2 >> 0.033\,in^2 \therefore OK$

$\tau = \frac{500}{0.22} = 2272.7$ psi

CHECK COUPLE RESISTANCE -

$M = (500\#)(5/8 + 1\,3/16) = 906$ in-lbs

$M_{RES} = V \cdot 2'' \; ; \; M \leq M_{RES}$

$V = \frac{906}{2} = 453\#$

$\tau = \frac{453}{\frac{\pi}{4}(.375^2)} = 4102$ psi $< \sigma_{ALL} \therefore OK$

COMBINED SHEAR DUE TO COUPLE + SHEAR = 4102 + 2272.7

= 6375 psi $< \sigma_{ALLOW} \therefore OK$

UPPER SUPPORT PLATE STRESSES.

$500\# = P$ $\qquad A = \underset{\text{2 plates}}{(2)} * \underset{\text{DEEP}}{1''} * \underset{\text{THK}}{1/2''} = 1_{IN}^2$

$$\tau = \frac{P}{A} = \frac{500}{1_{IN}^2} = 500 \text{ psi} \ll \tau_{ALLOW} = \frac{F_y}{3}$$

WELDS –

- TOP HORZ BEAM TO VERT. MEM.

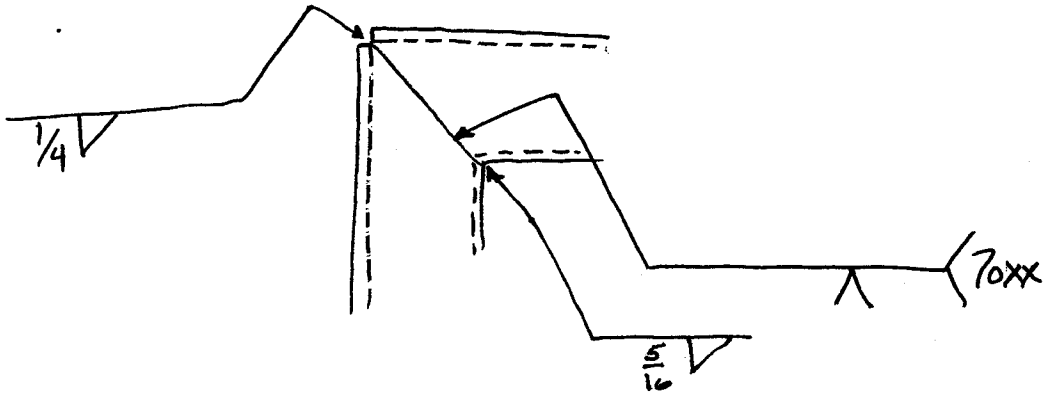

MOMENT CONNECTION – USE FULL PENETRATION WELDS ON SIDES W/ V-GROOVE WELD PREP

- GUARD PLATE TO TOP. HORZ BEAM –

USE A 1/4" FILLET ALL AROUND

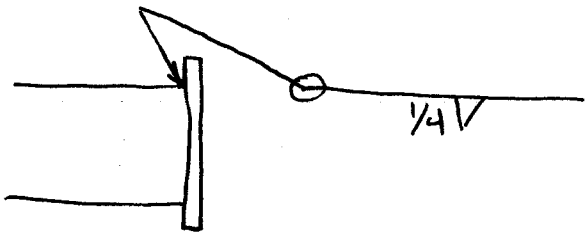

- VERT. MEM TO HORIZ. BEAM –

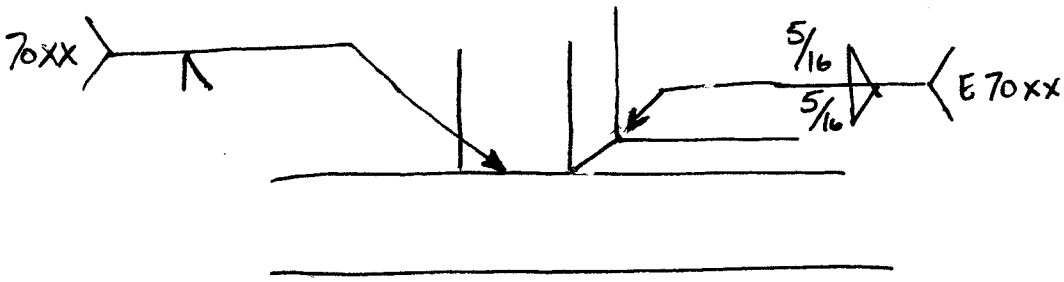

USE FULL PENETRATION ON GROOVE WELD.

WELD SIZING (CONT)

- WELDS FROM HORZ BEAM TO LEG & LEG TO FOOT

USE SAME DETAIL AS USED ON VERT MEM. TO HORIZ. BEAM.

- WELDS OF LOWER SUPPORT PLATES TO HORIZONTAL MEMBER

$$P = 425\,\# = 0.707\,w \times l \times F_v$$

$$= (0.707)(1/4)(l)(0.3 \times 70{,}000\ \text{psi})$$

$$\therefore l_{min} = 0.11''$$

∴ USE A 1/4" FILLET WELD ALONG FULL LENGTH BTW SPACE

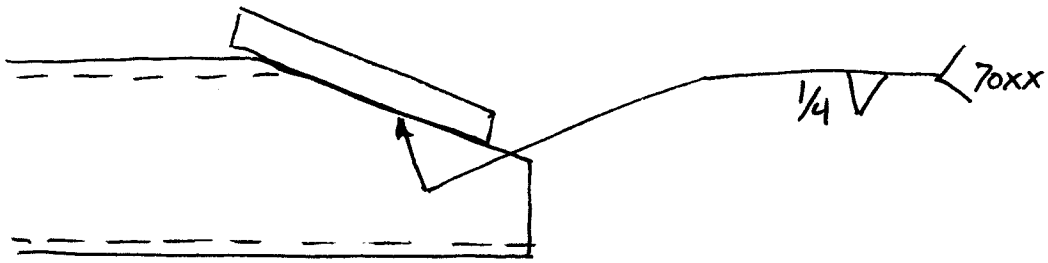

REV	DESCRIPTION

		DATE
DRAWN		
APPROVED		

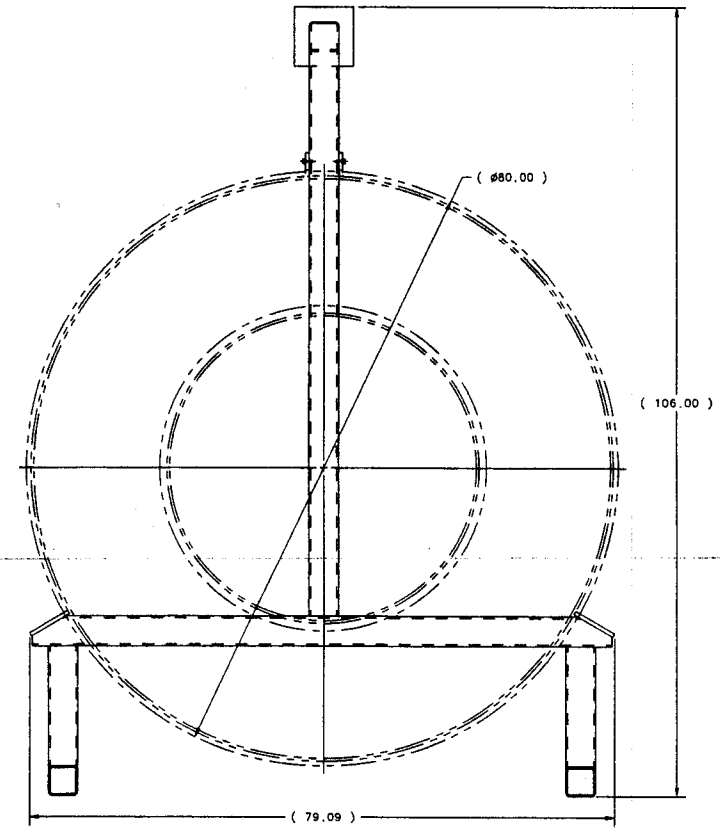

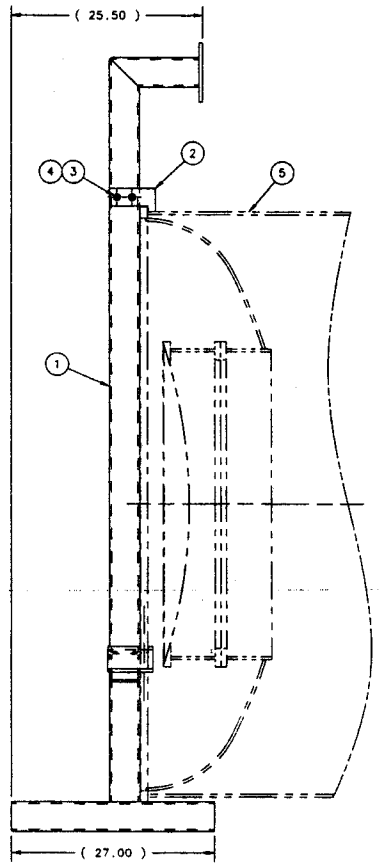

JUL 2003
REFERENCE ONLY
Not For
Fabrication

ITEM	PART NO.	DESCRIPTION OR SIZE	QTY.
5	MD-406865	NUMI VACUUM DECAY PIPE UPSTREAM	1
4	COML	FLAT WASHER, 3/8 NOM., S.S. 304	4
3	COML	HHCS, 3/8-16 UNC x 1.00 LG., S.S. 304	4
2	MB-431227	UPPER SUPPORT PLATE	2
1	MD-431223	INSTALLATION FIXTURE WELDMENT	1

PARTS LIST

UNLESS OTHERWISE SPECIFIED			ORIGINATOR	D.PUSHKA	21-JUL-2003
.XX	.XXX	ANGLES	DRAWN	W.CYKO	21-JUL-2003
±	±	±	CHECKED		
			APPROVED		
			USED ON		

1. BREAK ALL SHARP EDGES .015 MAX.
2. DO NOT SCALE DRAWING.
3. DIMENSIONS BASED UPON ANSI Y14.5M-1982
4. ALL DIMENSIONS ARE INCHES
5. MAX. ALL MACH. SURFACES ✓

MATERIAL
SEE ABOVE PARTS LIST

FERMI NATIONAL ACCELERATOR LABORATORY
UNITED STATES DEPARTMENT OF ENERGY

PPD/MECHANICAL DEPARTMENT
NUMI VACUUM DECAY PIPE UPSTREAM
INSTALLATION FIXTURE ASSEMBLY

SCALE	DRAWING NUMBER	SHEET	REV
1/8	8875.114-MD-431222	1 OF 1	

CREATED WITH : Ideas8m3 GROUP: PPD/MECHANICAL DEPARTMENT

REV	DESCRIPTION		DATE
			DATE

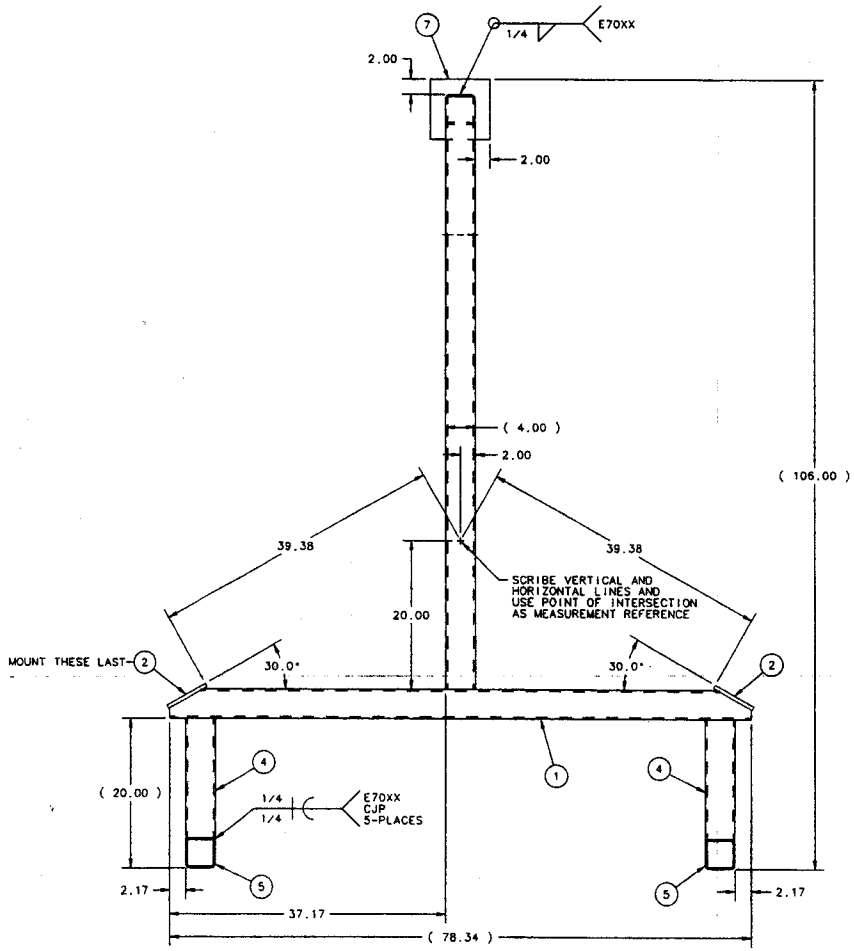

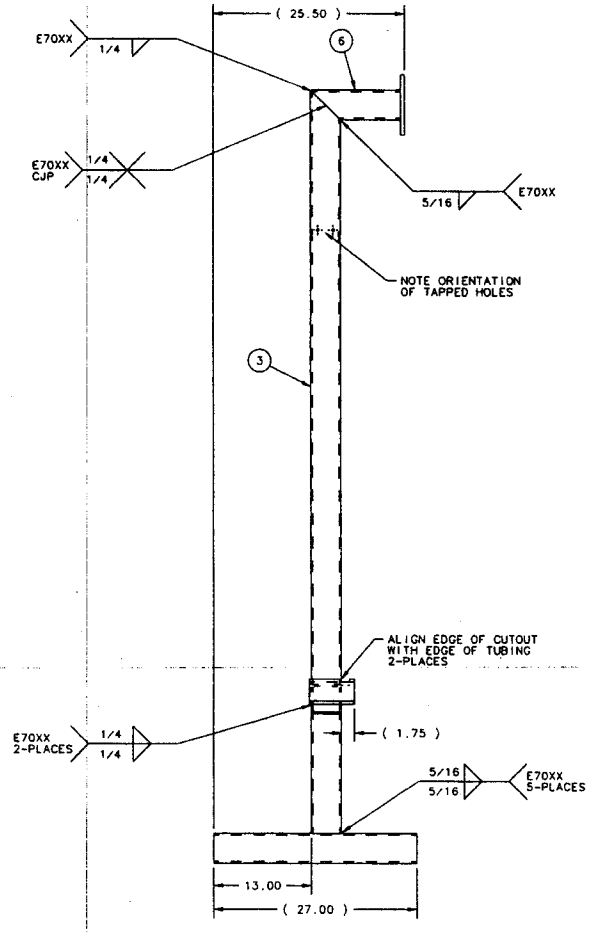

JUL 2003
REFERENCE ONLY
Not For Fabrication

ITEM	PART NO.	DESCRIPTION OR SIZE	QTY.
7	COML	PLATE, 1/2" x 6.00" x 6.00 CARBON STEEL ASTM A36	1
6	MB-431228	GUARD PLATE EXTENSION	1
5	COML	SQUARE TUBING, 4"x 4" x 1/4" WALL x 27.00 LG., CARBON STEEL ASTM A500 GR. B	2
4	COML	SQUARE TUBING, 4"x 4" x 1/4" WALL x 18.00 LG., CARBON STEEL ASTM A500 GR. B	2
3	MB-431226	VERTICAL SUPPORT TUBE	1
2	MB-431225	LOWER SUPPORT PLATE	2
1	MB-431224	HORIZONTAL SUPPORT TUBE	1

PARTS LIST

UNLESS OTHERWISE SPECIFIED			ORIGINATOR	D.PUSHKA	21-JUL-2003
.XX	.XXX	ANGLES	DRAWN	W.CYKO	21-JUL-2003
± .03	±	± 1°	CHECKED		
			APPROVED		
			USED ON	MD-431222	
			MATERIAL	SEE ABOVE PARTS LIST	

1. BREAK ALL SHARP EDGES .015 MAX.
2. DO NOT SCALE DRAWING.
3. DIMENSIONS BASED UPON ANSI Y14.5M-1982
4. ALL DIMENSIONS ARE INCHES
5. MAX. ALL MACH. SURFACES 250

FERMI NATIONAL ACCELERATOR LABORATORY
UNITED STATES DEPARTMENT OF ENERGY

PPD/MECHANICAL DEPARTMENT
NUMI VACUUM DECAY PIPE UPSTREAM
INSTALLATION FIXTURE WELDMENT

SCALE	DRAWING NUMBER	SHEET	REV
1/8	8875.114-MD-431223	1 OF 1	

CREATED WITH : Ideas9m3 GROUP: PPD/MECHANICAL DEPARTMENT

2. EST. WT. = 280 LBS.

1. AFTER WELDING, PRIME WITH RUSTOLEUM METAL PRIMER.

NOTES:

REV	DESCRIPTION		DATE
			DATE

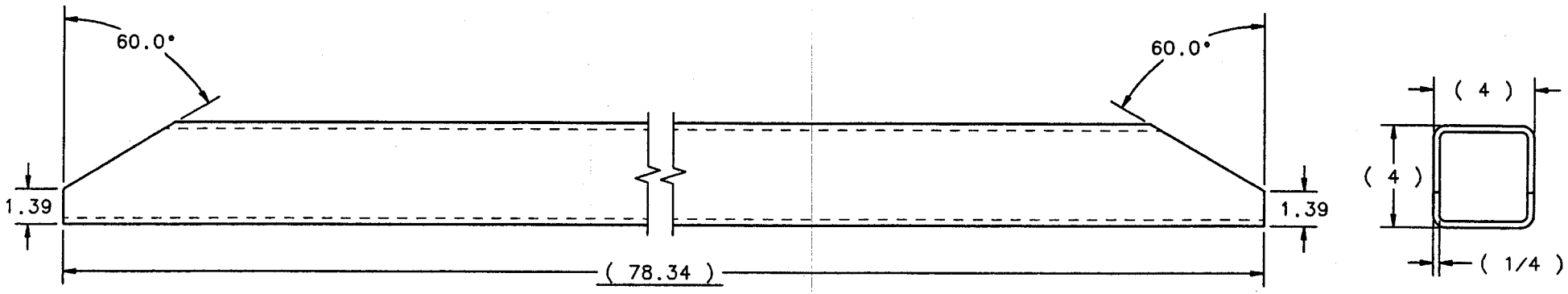

UNLESS OTHERWISE SPECIFIED			ORIGINATOR	D.PUSHKA	22-JUL-2003
.XX	.XXX	ANGLES	DRAWN	W.CYKO	22-JUL-2003
± .03	±	± 1°	CHECKED	D. ARNOLD	24-JUL-2003
			APPROVED	D.PUSHKA	24-JUL-2003

1. BREAK ALL SHARP EDGES .015 MAX.
2. DO NOT SCALE DRAWING.
3. DIMENSIONS BASED UPON ANSI Y14.5M-1982
4. ALL DIMENSIONS ARE INCHES
5. MAX. ALL MACH. SURFACES 250

USED ON: MD-431223

MATERIAL: SQUARE TUBING, 4 X 4"X 1/4 WALL X 78.34 LG. CARBON STEEL ASTM A500 GR. B

JUL 2003
REFERENCE ONLY
Not For Fabrication

FERMI NATIONAL ACCELERATOR LABORATORY
UNITED STATES DEPARTMENT OF ENERGY

PPD/MECHANICAL DEPARTMENT
NUMI VACUUM DECAY PIPE UPSTREAM HORIZONTAL SUPPORT TUBE

SCALE	DRAWING NUMBER	SHEET	REV
1/4	8875.114-MB-431224	1 OF 1	

CREATED WITH : Ideas9m3 | GROUP: PPD/MECHANICAL DEPARTMENT

REV	DESCRIPTION		DATE
			DATE

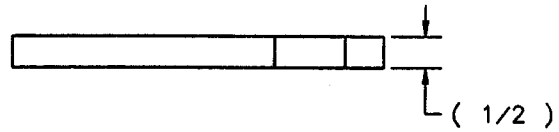

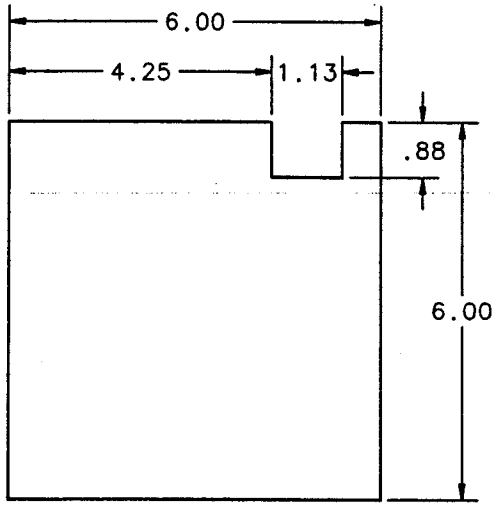

JUL 2003
REFERENCE ONLY
Not For Fabrication

UNLESS OTHERWISE SPECIFIED			ORIGINATOR	D.PUSHKA	22-JUL-2003
.XX	.XXX	ANGLES	DRAWN	W.CYKO	22-JUL-2003
± .02	±	±	CHECKED	D. ARNOLD	24-JUL-2003
			APPROVED	D. PUSHKA	24-JUL-2003

1. BREAK ALL SHARP EDGES .015 MAX.
2. DO NOT SCALE DRAWING.
3. DIMENSIONS BASED UPON ANSI Y14.5M-1982
4. ALL DIMENSIONS ARE INCHES
5. MAX. ALL MACH. SURFACES 125

USED ON: MD-431223

MATERIAL: PLATE, 1/2 THK., CARBON STEEL ASTM A36

FERMI NATIONAL ACCELERATOR LABORATORY
UNITED STATES DEPARTMENT OF ENERGY

PPD/MECHANICAL DEPARTMENT
NUMI VACUUM DECAY PIPE UPSTREAM LOWER SUPPORT PLATE

SCALE	DRAWING NUMBER	SHEET	REV
1/2	8875.114-MB-431225	1 OF 1	

CREATED WITH : Ideas9m3 GROUP: PPD/MECHANICAL DEPARTMENT

REV	DESCRIPTION		DATE
			DATE

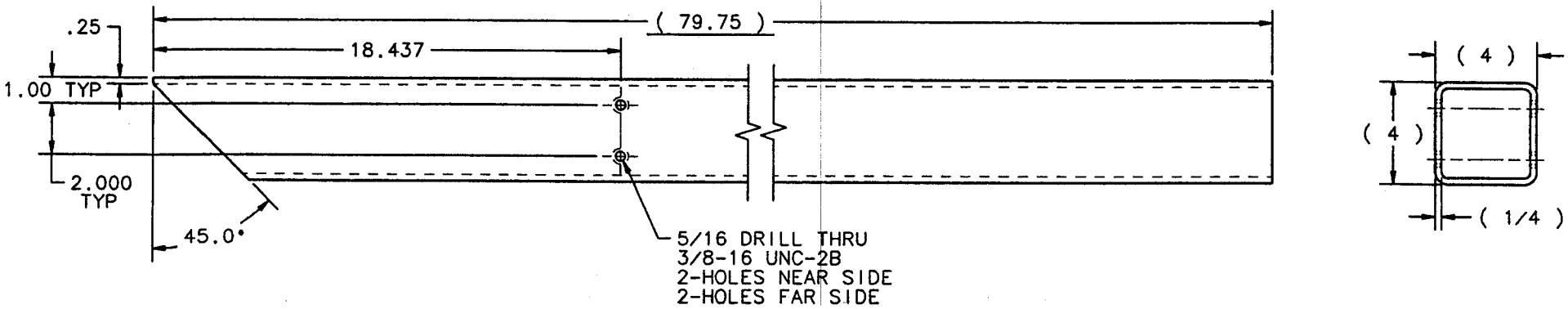

UNLESS OTHERWISE SPECIFIED			ORIGINATOR	D.PUSHKA	22-JUL-2003
.XX	.XXX	ANGLES	DRAWN	W.CYKO	22-JUL-2003
± .02	± .005	± 1°	CHECKED	D. Arnold	24-JUL-2003
			APPROVED	D. PUSHKA	24-July 2003

1. BREAK ALL SHARP EDGES .015 MAX.
2. DO NOT SCALE DRAWING.
3. DIMENSIONS BASED UPON ANSI Y14.5M-1982
4. ALL DIMENSIONS ARE INCHES
5. MAX. ALL MACH. SURFACES 250 √

USED ON: MD-431223

MATERIAL: SQUARE TUBING, 4 X 4 X 1/4 WALL X 79.75 LG. CARBON STEEL ASTM A500 GR. B

JUL 2003 REFERENCE ONLY Not For Fabrication

FERMI NATIONAL ACCELERATOR LABORATORY
UNITED STATES DEPARTMENT OF ENERGY

PPD/MECHANICAL DEPARTMENT
NUMI VACUUM DECAY PIPE UPSTREAM VERTICAL SUPPORT TUBE

SCALE	DRAWING NUMBER	SHEET	REV
1/4	8875.114-MB-431226	1 OF 1	

CREATED WITH : Ideas9m3 GROUP: PPD/MECHANICAL DEPARTMENT

REV	DESCRIPTION		DATE
			DATE

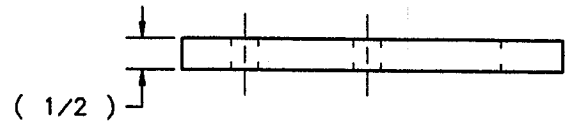

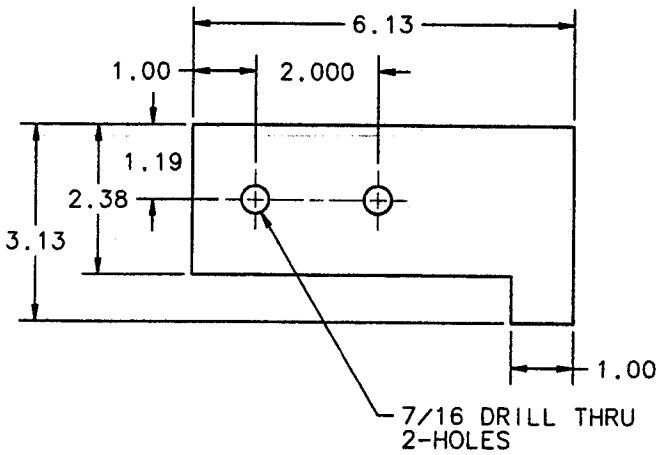

UNLESS OTHERWISE SPECIFIED			ORIGINATOR	D.PUSHKA	22-JUL-2003
.XX	.XXX	ANGLES	DRAWN	W.CYKO	22-JUL-2003
± .02	± .005	±	CHECKED	D. ARNOLD	24-JUL-2003
1. BREAK ALL SHARP EDGES .015 MAX. 2. DO NOT SCALE DRAWING. 3. DIMENSIONS BASED UPON ANSI Y14.5M-1982 4. ALL DIMENSIONS ARE INCHES 5. MAX. ALL MACH. SURFACES 125			APPROVED	D.PUSHKA	24 JUL 2003
			USED ON	MD-431222	
			MATERIAL	PLATE, 1/2 THK., CARBON STEEL ASTM A36	

JUL 2003
REFERENCE ONLY
Not For
Fabrication

FERMI NATIONAL ACCELERATOR LABORATORY
UNITED STATES DEPARTMENT OF ENERGY

PPD/MECHANICAL DEPARTMENT
NUMI VACUUM DECAY PIPE UPSTREAM UPPER SUPPORT PLATE

SCALE	DRAWING NUMBER	SHEET	REV
1/2	8875.114-MB-431227	1 OF 1	

CREATED WITH : Ideas9m3 GROUP: PPD/MECHANICAL DEPARTMENT

REV	DESCRIPTION	DRAWN	DATE
			DATE

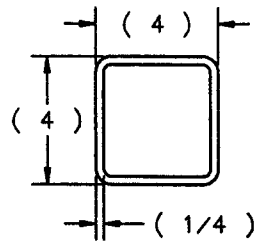

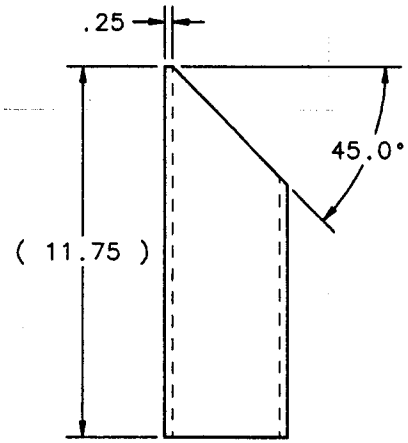

JUL 2003
REFERENCE ONLY
Not For
Fabrication

UNLESS OTHERWISE SPECIFIED			ORIGINATOR	D.PUSHKA	22-JUL-2003
.XX	.XXX	ANGLES	DRAWN	W.CYKO	22-JUL-2003
± .02	±	± 1°	CHECKED	D. Arnold	24-JUL-2003
			APPROVED	D. Pushka	24-JUL-2003

1. BREAK ALL SHARP EDGES .015 MAX.
2. DO NOT SCALE DRAWING.
3. DIMENSIONS BASED UPON ANSI Y14.5M-1982
4. ALL DIMENSIONS ARE INCHES
5. MAX. ALL MACH. SURFACES 250

USED ON: MD-431223

MATERIAL: SQUARE TUBING, 4 X 4 X 1/4 WALL X 11.75 LG. CARBON STEEL ASTM A500 GR. B

FERMI NATIONAL ACCELERATOR LABORATORY
UNITED STATES DEPARTMENT OF ENERGY

PPD/MECHANICAL DEPARTMENT
NUMI VACUUM DECAY PIPE UPSTREAM GUARD PLATE EXTENSION

SCALE	DRAWING NUMBER	SHEET	REV
1/4	8875.114-MB-431228	1 OF 1	

CREATED WITH : Ideas9m3 GROUP: PPD/MECHANICAL DEPARTMENT