BELOW-THE-HOOK LIFTING DEVICE
Engineering Note Cover Page

Lifting Device Numbers:164

FNAL Site No/ Lab A Div. Specific No. _____ Asset No. _____

If applicable If applicable If applicable

ASME B30.20 Group: (check one)
- [x] Group I Structural and Mechanical Lifting Devices
- [ ] Group II Vacuum Lifting Devices
- [ ] Group III Magnets, Close Proximity Operated
- [ ] Group IV Magnets, Remote Operated

Device Name or Description CELB Lifting Plate Assembly

Device was (check all applicable)
- [ ] Purchased from a Commercial Lifting Device Manufacturer. Mfg Name _____
- [x] Designed and Built at Fermilab
- [ ] Designed by Fermilab and Built by a Vendor. Assy drawing number _____
- [ ] Provided by a User or other Laboratory
- [ ] Other: Describe _____

Engineering Note Prepared by R. J. Woods Date 3/26/08

Engineering Note Reviewed by Dave Pushka Date 4-14-08

Lifting Device Data:

Capacity 5680 Lbs

Fixture Weight 1268 Lbs

Service: [x] normal [ ] heavy [ ] severe (refer to B30.20 for definitions)

Duty Cycle _____ 8, 16 or 24 hour rating (applicable to groups III, and IV)

Inspections Frequency BEFORE EACH USE

Rated Load Test by FNAL (if applicable) Date 2/5/09 Load 7092 lbs 8360 lbs (+fixture)

[ ] Check if Load Test was by Vendor and attach the certificate

Satisfactory Load Test Witnessed by: BEN KILMINSTER

Signature (of Load Test Witness) [signature]

Notes or Special Information:

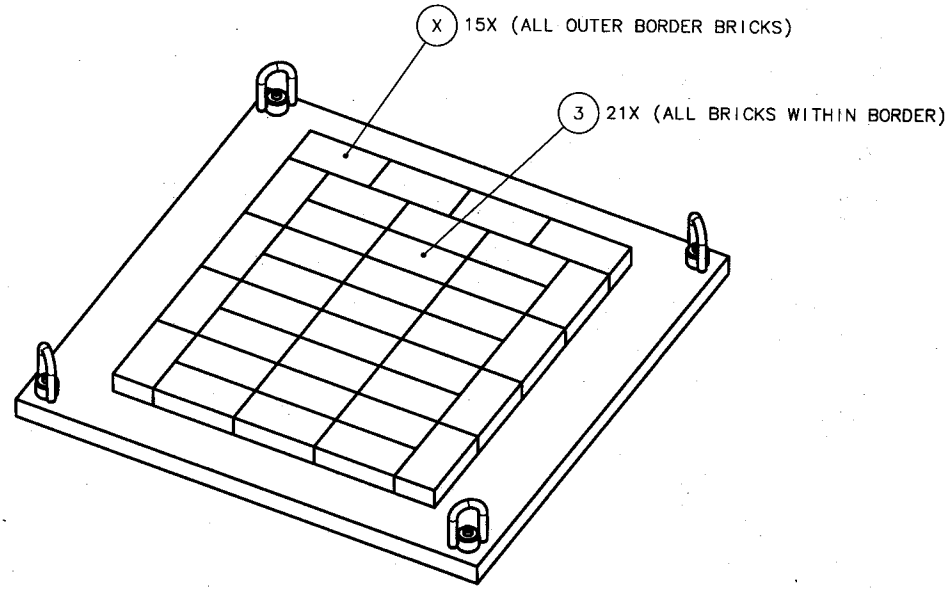

BOTTOM BRICK LAYER

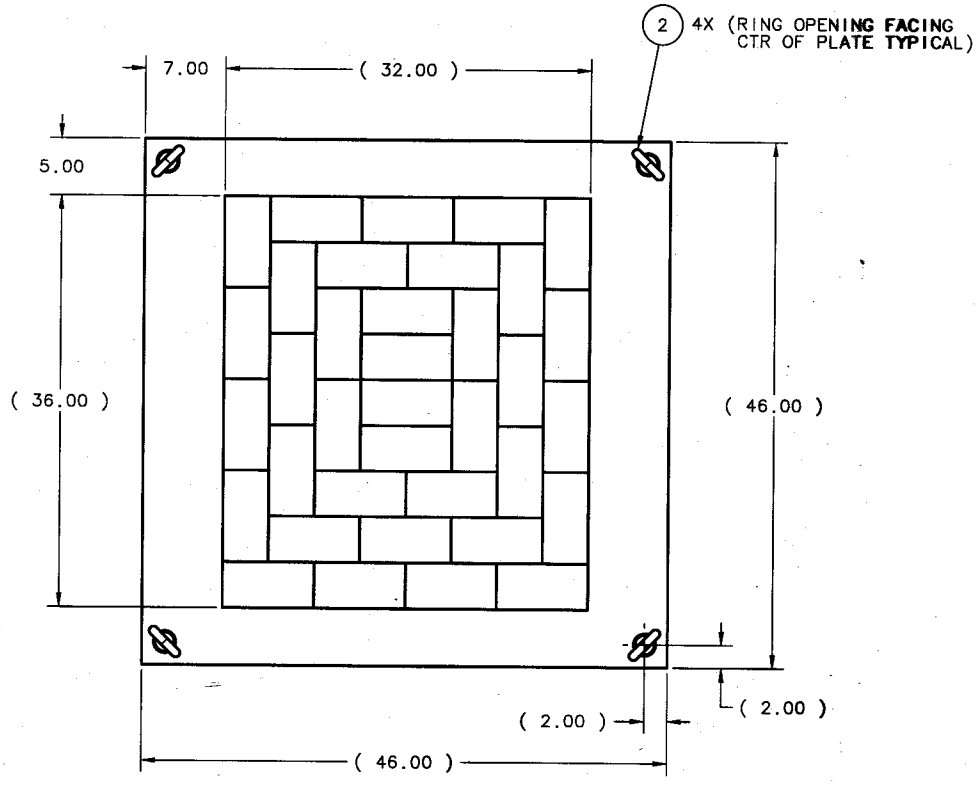

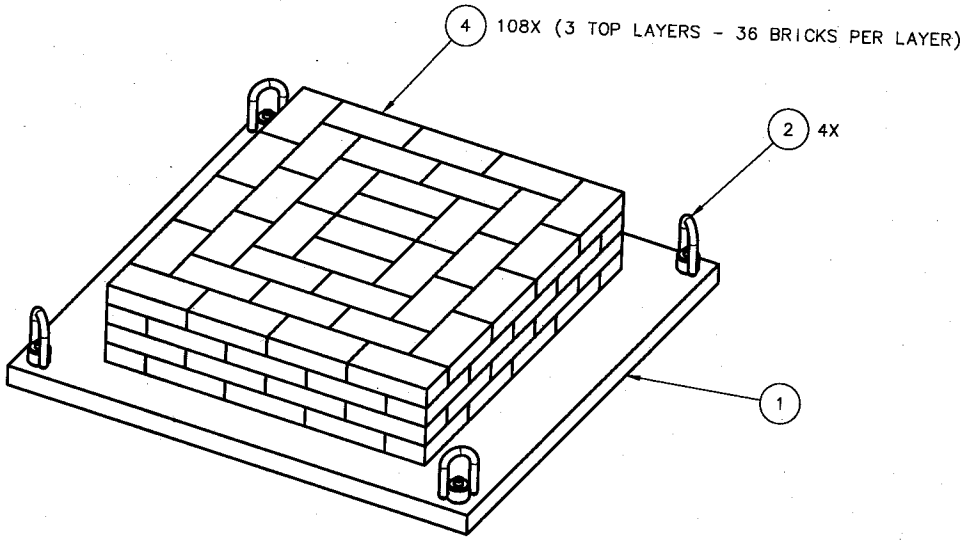

ALL BRICK LAYERS

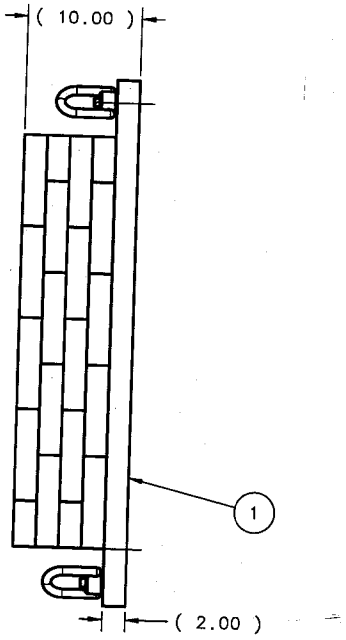

REV	DESCRIPTION	DRAWN	DATE
		APPROVED	DATE

ITEM	PART NO.	DESCRIPTION OR SIZE	QTY.
4	COML	OLD LEAD BRICK, 2" x 4" x 8"	108
3	COML	CLEAN LEAD BRICK, 2" x 4" x 8"	21
2	COML	FORGED STEEL HOIST RING, 1/2-13 THD, 2500 LB LIMIT, McMASTER-CARR P/N 2994T65	4
1	MB-XXXXXX	CELB LIFTING PLATE	1

PARTS LIST

UNLESS OTHERWISE SPECIFIED

± ± ±

1. BREAK ALL SHARP EDGES MAX.
2. DO NOT SCALE DRAWING.
3. DIMENSIONS BASED UPON
4. MAX. ALL MACH. SURFACES ✓
5. DRAWING UNITS:

ORIGINATOR
DRAWN
CHECKED
APPROVED

USED ON

MATERIAL

FERMI NATIONAL ACCELERATOR LABORATORY
UNITED STATES DEPARTMENT OF ENERGY

SCALE	DRAWING NUMBER	SHEET	REV
	. — —	1 OF 1	

CREATED WITH : GROUP:

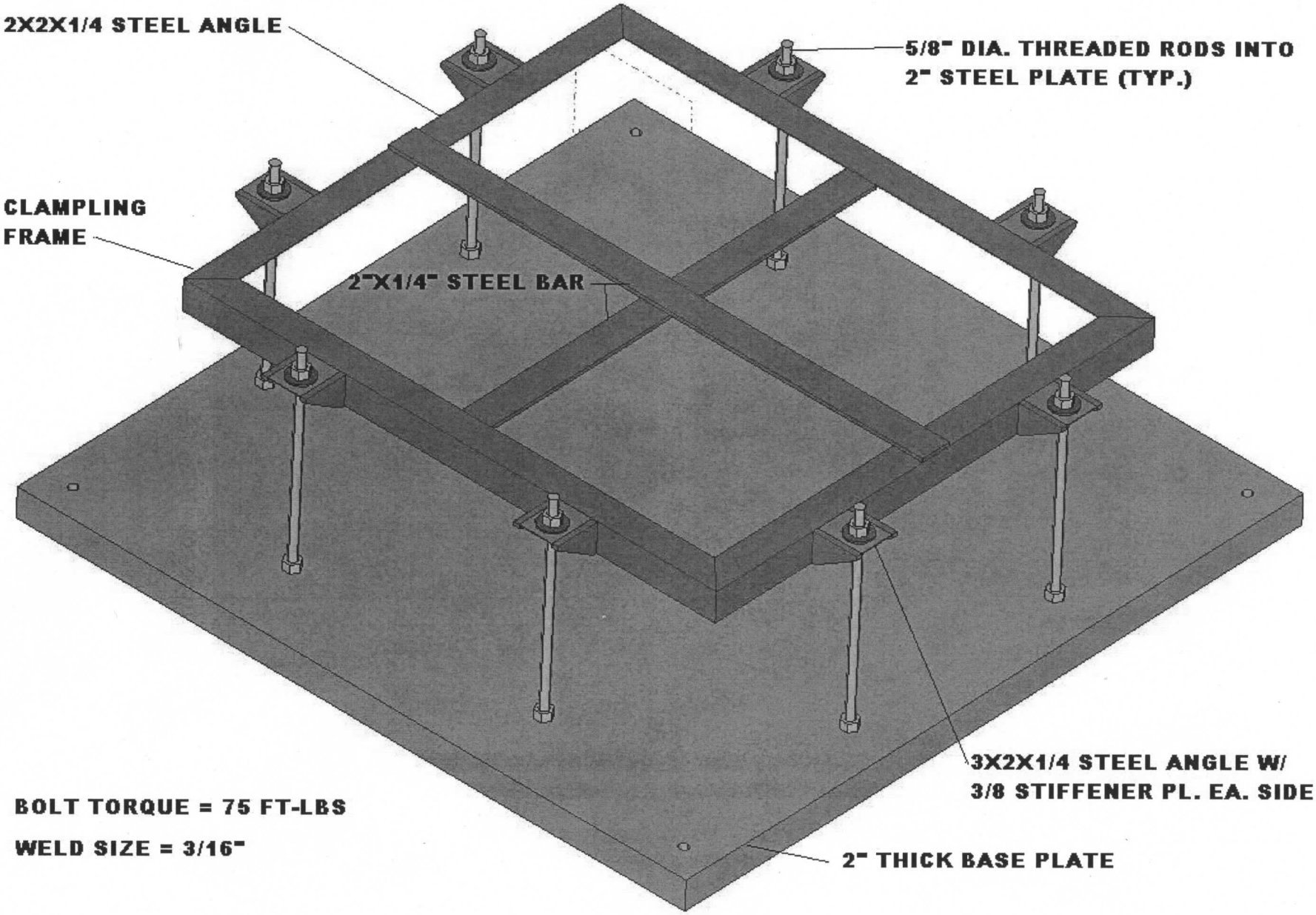
2X2X1/4 STEEL ANGLE
5/8" DIA. THREADED RODS INTO
2" STEEL PLATE (TYP.)
CLAMPLING
FRAME
2"X1/4" STEEL BAR
3X2X1/4 STEEL ANGLE W/
3/8 STIFFENER PL. EA. SIDE
BOLT TORQUE = 75 FT-LBS
WELD SIZE = 3/16"
2" THICK BASE PLATE

FERMILAB ENGINEERING NOTE	SECTION PPD	PROJECT	SERIAL-CATEGORY	PAGE 1

SUBJECT: CELB LIFTING PLATE ASSEMBLY

NAME: R. J. WOODS

DATE: 3/26/08

REVISION DATE:

CASE 1 - 4 LEVELS OF BRICKS
CHECK LIFTING FIXTURE PLATE:

LOADS:

LEAD BLOCK $= (710\,\#/FT^3)/1728 \times 2IN \times 4IN \times 8IN$
$= 26.3\,\#$

PLATE $= (490\,\#/FT^3)/1728 \times 2IN$
$= 0.57\,\#/IN^2$

LIFTED LOAD = 4 LAYERS OF LEAD BRICKS W/ 36 BRICKS PER LAYER
$= 4(36)(26.3)$
$= 3787.2\,\#$

(SEE DRAWING FOR BRICK LAYOUT)

AREA OF BRICKS = $32'' \times 36''$
UNIFORM LOAD $= (3787.2)/(32 \times 36)$
$= 3.3\,\#/IN^2$

TOTAL LOAD $= 3.3\,\#/IN^2 + 0.57\,\#/IN^2$
$= 3.87\,\#/IN^2$

CONSERVATIVELY ASSUME ONEWAY BEAM ACTION:

SPAN $= 46 - (2 \times 2) = 42''$
$M_{MAX} = 3.87(42)^2/8$
$= 853\,\#\text{-}IN/IN$

S_y FOR 1" WIDTH OF PL $= \frac{1(2)^2}{6}$
$= 0.667\,IN^3$

$f_b = 853/0.667$
$= 1279\,PSI/IN$

F_b ALLOW. $= 36{,}000/3 = 12{,}000\,PSI > 1279\,PSI$ OK

FERMILAB ENGINEERING NOTE	SECTION PPD	PROJECT	SERIAL-CATEGORY	PAGE 2
SUBJECT: CELB LIFTING PLATE ASSEMBLY		NAME: R.J. WOODS		
		DATE: 3/26/08	REVISION DATE	

SHEAR LOAD PER INCH:

$((3787.2)/2)/32 = 59.2^{\#}/IN$ BRICKS

$0.57(46''/2) = 13.11^{\#}/IN$ PLATE

$72.31^{\#}/IN$

SHEAR AREA $= 1'' \times 2'' = 2 IN^2$

SHEAR LOAD $= 72.31/2 = 36.2^{\#}/IN^2/IN$

$F_{V\,ALLOWABLE} = 36{,}000/3$
$= 12{,}000$ PSI > 36.2 PSI OK

HOIST RING:

TOTAL LOAD $= 3787.2 + 0.57(46)^2$
$= 4993^{\#}$ SAY $5000^{\#}$

ASSUME 3 OF 4 HOIST RINGS CARRY LOAD:

HOIST RING CAPACITY $= 5000/3$
$= 1667^{\#} \leq 2500^{\#}$ OK

USE 46" X 46" X 2" A36 STEEL PLATE W/4 2500# CAPACITY HOIST RINGS

FERMILAB ENGINEERING NOTE	SECTION PPD	PROJECT	SERIAL-CATEGORY	PAGE 3
SUBJECT: CELB LIFTING PLATE ASSEMBLY		NAME: R.J. WOODY		
		DATE: 3/26/08	REVISION DATE	

CHECK BRICK SLIDING:

SLIDING FRICTION LEAD ON STEEL $\mu = 0.30$

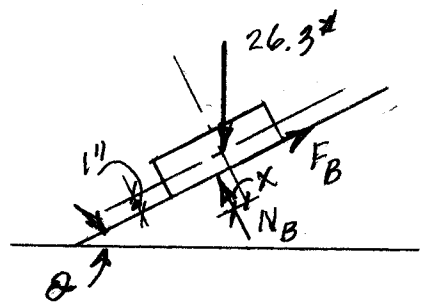

$26.3 \sin\theta = F_B$

$26.3 \cos\theta = N_B$

$26.3 \sin\theta (1) = 26.3 \cos\theta (x)$ $\qquad F_B = 0.3 N_B$

FIND SLIDING ANGLE:

$26.3 \sin\theta (1) = 0.3 (26.3 \cos\theta)$

$\frac{\sin\theta}{\cos\theta} = \frac{0.3}{1}$

$\tan\theta = 0.3$

$\theta = 16.7^\circ$ = MAX ANGLE BEFORE SLIDING

$\tan 16.7 = X$

$0.3 = X$ ∴ BLOCK SLIDES BEFORE OVERTURNING

FIND HORIZONTAL LOAD PER FOOT FOR 4 LEVEL STACK:

$W = \frac{8'' \times 36'' \times 12''}{1728} \times 710\#/FT^3$

$= 1420\#$

ASSUME MAX 30° ANGLE:

$N_B = 1420 (\cos 30) = 1230\#$

$F_B = 0.30 (N_B) = 369\#$

FERMILAB ENGINEERING NOTE	SECTION PPD	PROJECT	SERIAL-CATEGORY	PAGE 4

SUBJECT: 2ELB LIFTING PLATE ASSEMBLY

NAME: R. J. WOODS

DATE: 3/26/08

REVISION DATE:

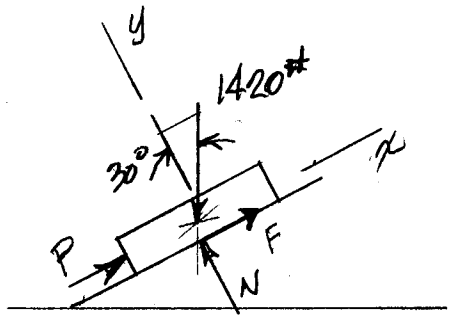

$\Sigma F_x = 0 = -1420 \sin 30 + P + F$

$P = -710 + 369$

$P = 341\ \#$

$\Sigma F_y = 0 = N - 1420 \cos 30$

$N = 1230\#$ $\quad F = 0.3N$

$\therefore F = 0.3(1230)$

$= 369\#$

ANGLE MUST TAKE 341#/FT

FOR L 1/4 X 2" X 2":

$M_V = 1" \times 341\#$ PER 12" LENGTH

$= 341\#\text{-IN}$

$S = 12"(0.25)^2/6 = 0.125$

$f_b = 341/0.125 = 2728$ PSI $< 12{,}000$ PSI <u>ok</u>

WELD REQ'D:

FOR 1/16" FILET WELD $f_V = 0.3(70\text{KSI})(.707)(1/16)$

$= .928$ K/IN $= 928$ #/IN

MAX WELD SIZE $= 1/4" - (1/16")$

$= 3/16"$

LOAD/IN $= 3(928) = 2784$ #/IN

1 IN WELD/FOOT > 341 #/FOOT <u>ok</u>

FERMILAB ENGINEERING NOTE	SECTION PPD	PROJECT	SERIAL-CATEGORY	PAGE 5

SUBJECT: CELB LIFTING PLATE ASSEMBLY

NAME: R. J. WOODS

DATE: 3/26/08

REVISION DATE:

CASE 2 - NUMBER OF LEVELS DETERMINED BY HOIST RING CAPACITY

FIND MAXIMUM LOAD DETERMINED BY HOIST RING CAPACITY:

ASSUME 3 OF 4 RINGS EFFECTIVE:

$$\text{MAX. LOAD} = 3(2500\#) = 7500\#$$

$$\text{PLATE LOAD} = 0.57(46)^2 = 1206\#$$

$$\text{AVAILABLE CAPACITY} = 7500 - 1206 = 6294\#$$

$$\text{EA. BRICK LEVEL} = 26.3\# \times 36 = 946.8\#$$

$$\text{NUMBER OF LEVELS} = 6294/946.8 = 6.65$$

SAY 6 LEVELS IN MAX.

CHECK BOTTOM PL:

$$\text{LOAD} = 6(946.8) + 1206\# = 6887\#$$

FOR 1" STRIP OF PLATE,

$$w = 6887/(32 \times 36) = 5.98\#/\text{IN}$$

$$M = 5.98(42)^2/8 = 1319\ \#\text{-IN}$$

$$f_b = 1319/0.667 = 1977\ \text{psi} < 12{,}000\ \text{psi}\ \underline{\underline{\text{OK}}}$$

USING FIGURE AT TOP OF PAGE 4, THIS CALC.:

$$\Sigma F_y = 0 = N - 6(946.8)\cos 30$$

$$N = 4920\#$$

$$F = 0.3N = 0.3(4920) = 1476\#$$

SUBJECT: LELB LIFTING PLATE ASSEMBLY

NAME: R. J. WOODS

DATE: 3/26/08

REVISION DATE:

$$\Sigma F_x = 0 = -6(946.8)\sin 30 + P + F$$
$$= -2840 + P + 1476$$
$$P = 1364\#$$

FOR TOP CLAMPING FRAME:

$$M = 6'' \times 1364\# = 8184\#\text{-IN}$$

LOAD FRAME MUST PROVIDE TO PREVENT SLIDING:

$$\Sigma F_x = 0 = -6(946.8)\sin 30 + 0 + F$$
$$F = 2840\#$$

$$F = 0.3N$$
$$2840 = 0.3(N)$$
$$9468\# = N$$

FOR SAFETY FACTOR OF 3:

$$\text{TOTAL LOAD} = 3(9468)$$
$$= 28404\#$$

USE 8 BOLTS (2 EA. SIDE)

$$\text{LOAD/BOLT} = 28404/8$$
$$= 3551\#/\text{BOLT}$$

CLAMP LOAD = 75% PROOF LOAD × STRESS AREA*

FOR A36 5/8"ϕ THREADED ROD

$$\text{CLAMP LOAD} = 0.75(33{,}000)(0.2260)$$
$$= 5594\# > 3551\#/\text{BOLT OK}$$

$$\text{TORQUE} = RDT = 0.200(5/8)(5594) = 699\text{IN-LB} = 58\text{ FT-LB}$$

USE 8 A36 5/8"ϕ THREADED RODS TORQUE TO 75 FT-LB

*FORMULAS PROVIDED BY PORTLAND BOLT & MANUFACTURING COMPANY (COPY PROVIDED AT END OF THIS CALCULATION)

SUBJECT: CELB LIFTING PLATE ASSEMBLY

NAME: R. J. WOODS

DATE: 3/26/08 | REVISION DATE:

BOLT SUPPORT BRACKET:

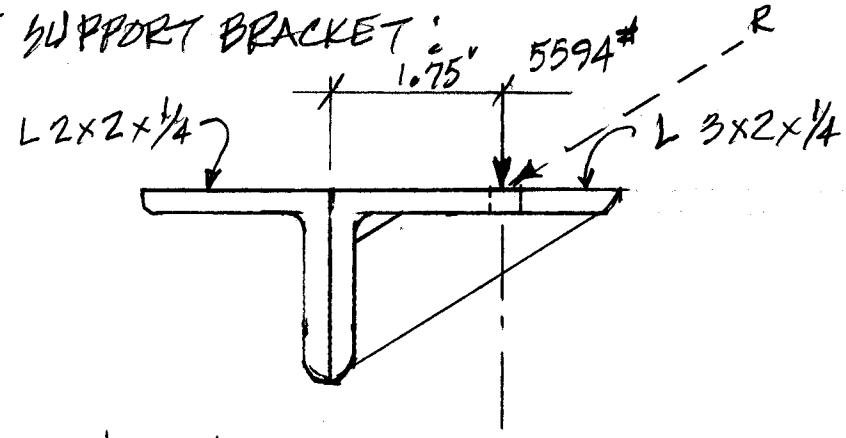

STIFFNER PLATES:

TRY 3/8" PLATES:

COMPRESSION AREA = 1.5 (3/8) = 0.5625 IN²

PLATE ANGLE:

TAN A = 2/3

A = 33.69°

R = 5594 / SIN 33.69

= 10085#

FOR A STIFFNER ON EACH SIDE OF BOLT:

f_c = (10085/2) / (0.5625)

= 8964 psi < 12,000 psi ok

USE 3/8" PLATE EA. SIDE OF BOLT

CHECK WELD BETWEEN ANGLES:

3/16 MAXIMUM WELD SIZE:

LOAD PER INCH = 0.3(.707)(3/16)(70,000)

= 2784#/IN

FOR 2" WELD EA. SIDE

2(2)(2784) = 11,135#

MAX. CLAMP LOAD = PROOF LOAD × STRESS AREA

= 33000 × 0.2260

= 7458# < 11,135# ok

PERFORM SUPERVISED LOAD TEST WITH 1.25(6)(946.8) = 7100# LOAD

FERMILAB ENGINEERING NOTE	SECTION PPD	PROJECT	SERIAL-CATEGORY	PAGE 8

SUBJECT	NAME	
CELB LIFTING PLATE ASSEMBLY	R. J. WOODS	
	DATE 3/26/08	REVISION DATE

FIXTURE WT:

BASE PLATE $= (46)^2(2)(490)/1728 = 1200^{\#}$

$L\,2\times2\times1/4 \times 32.625 \times 2 = 2(8.22) = 16.44^{\#}$

$L\,2\times2\times1/4 \times 28.625 \times 2 = 2(9.26) = 18.52^{\#}$

BAR $2\times1/4 \times 36.25 = 5.17^{\#}$

BAR $2\times1/4 \times 28.625 = 4.04^{\#}$

BRACKET

$L\,3\times2\times1/4 \times 2.25 = 2.25/12(4.1) = (0.77^{\#})$

STIFFENER PLATES

$\left(\frac{1.75\times2.75}{2}\right)(3/8)(490)/1728 = 0.26$

$1/4(3/8)(2)(490)/1728 = 0.05$

$1/4(3/8)(3)(490)/1728 = 0.08$

$(0.39^{\#}) \times 2 = 0.78$

$+\ 0.77$

(1.55)

$8(1.55) = 12.4^{\#}$

THREADED RODS:

$5/8^2(3.14159)/4\,(490)/1728 = (1.39)$

$8(1.39) = 11.12^{\#}$

$= \underline{67.69^{\#}}$

$1200 + 68 = 1268^{\#}$

PORTLAND BOLT
& MANUFACTURING COMPANY

Suggested Starting Torque Values
ASTM A307

Bolt Size	TPI	Proof Load (lbs)	Clamp Load (lbs)	Tightening Torque (ft lbs)		
				Waxed	Galv	Plain
1/4	20	1145	859	2	4	4
5/16	18	1886	1415	4	9	7
3/8	16	2790	2093	7	16	13
7/16	14	3827	2870	10	26	21
1/2	13	5108	3831	16	40	32
9/16	12	6552	4914	23	58	46
5/8	11	8136	6102	32	79	64
3/4	10	12024	9018	56	141	113
7/8	9	15200	11400	83	208	166
1	8	20000	15000	125	313	250
1 1/8	7	25200	18900	177	443	354
1 1/4	7	32000	24000	250	625	500
1 3/8	6	38100	28575	327	819	655
1 1/2	6	46400	34800	435	1088	870
1 3/4	5	68400	51300	748	1870	1496
2	4½	90000	67500	1125	2813	2250
2 1/4	4½	117000	87750	1645	4113	3291
2 1/2	4	144000	108000	2250	5625	4500
2 3/4	4	177480	133110	3050	7626	6101
3	4	214920	161190	4030	10074	8060
3 1/4	4	255600	191700	5192	12980	10384
3 1/2	4	299880	224910	6560	16400	13120
3 3/4	4	347760	260820	8151	20377	16301
4	4	398880	299160	9972	24930	19944

SAE Grade 2

Bolt Size	TPI	Proof Load (lbs)	Clamp Load (lbs)	Tightening Torque (ft lbs)		
				Waxed	Galv	Plain
1/4	20	1750	1313	3	7	5
5/16	18	2900	2175	6	14	11
3/8	16	4250	3188	10	25	20
7/16	14	5850	4388	16	40	32
1/2	13	7800	5850	24	61	49
9/16	12	10000	7500	35	88	70
5/8	11	12400	9300	48	121	97
3/4	10	18400	13800	86	216	173
7/8	9	15200	11400	83	208	166
1	8	20000	15000	125	313	250
1 1/8	7	25200	18900	177	443	354
1 1/4	7	32000	24000	250	625	500
1 3/8	6	38100	28575	327	819	655
1 1/2	6	46400	34800	435	1088	870

ASTM A325 / ASTM A449 / SAE Grade 5

Bolt Size	TPI	Proof Load (lbs)	Clamp Load (lbs)	Tightening Torque (ft lbs)		
				Waxed	Galv	Plain
1/4	20	2700	2025	4	11	8
5/16	18	4450	3338	9	22	17
3/8	16	6600	4950	15	39	31
7/16	14	9050	6788	25	62	49
1/2	13	12050	9038	38	94	75
9/16	12	15450	11588	54	136	109
5/8	11	19200	14400	75	188	150
3/4	10	28400	21300	133	333	266
7/8	9	39250	29438	215	537	429
1	8	51500	38625	322	805	644
1 1/8	7	56450	42338	397	992	794
1 1/4	7	71700	53775	560	1400	1120
1 3/8	6	85450	64088	734	1836	1469
1 1/2	6	104000	78000	975	2438	1950
1 3/4	5	104500	78375	1143	2857	2286
2	4½	137500	103125	1719	4297	3438
2 1/4	4½	178750	134063	2514	6284	5027
2 1/2	4	220000	165000	3438	8594	6875
2 3/4	4	271150	203363	4660	11651	9321
3	4	328350	246263	6157	15391	12313

ASTM A354-BD / ASTM A490 / SAE Grade 8

Bolt Size	TPI	Proof Load (lbs)	Clamp Load (lbs)	Tightening Torque (ft lbs)		
				Waxed	Galv	Plain
1/4	20	3800	2850	6	NA	12
5/16	18	6300	4725	12	NA	25
3/8	16	9300	6975	22	NA	44
7/16	14	12750	9563	35	NA	70
1/2	13	17050	12788	53	NA	107
9/16	12	21850	16388	77	NA	154
5/8	11	27100	20325	106	NA	212
3/4	10	40100	30075	188	NA	376
7/8	9	55450	41588	303	NA	606
1	8	72700	54525	454	NA	909
1 1/8	7	91550	68663	644	NA	1287
1 1/4	7	120000	90000	938	NA	1875
1 3/8	6	138600	103950	1191	NA	2382
1 1/2	6	168600	126450	1581	NA	3161
1 3/4	5	228000	171000	2494	NA	4988
2	4½	300000	225000	3750	NA	7500
2 1/4	4½	390000	292500	5484	NA	10969
2 1/2	4	480000	360000	7500	NA	15000
2 3/4	4	517650	388238	8897	NA	17794
3	4	626850	470138	11753	NA	23507
3 1/4	4	745500	559125	15143	NA	30286
3 1/2	4	874650	655988	19133	NA	38266
3 3/4	4	1014300	760725	23773	NA	47545
4	4	1052600	789450	26315	NA	52630

Notes:

1. Values calculated using industry accepted formula T = KDP where T = Torque, K = torque coefficient (dimensionless), D = nominal diameter (inches), P = bolt clamp load, lb.
2. K values: **waxed** (e.g. pressure wax as supplied on high strength nuts) = .10, hot dip **galvanized** = .25, and **plain** non-plated bolts (as received) = .20.
3. Torque has been converted into ft/lbs by dividing the result of the formula by 12
4. All calculations are for Coarse Thread Series (UNC).
5. Grade 2 calculations only cover fasteners 1/4"-3/4" in diameter up to 6" long; for longer fasteners the torque is reduced significantly.
6. Clamp loads are based on 75% of the minimum proof loads for each grade and size.
7. Proof load, stress area, yield strength, and other data is based on IFI 7th Edition (2003) Technical Data N-68, SAE J429, ASTM A307, A325, A354, A449, and A490.

The above estimated torque calculations are only offered as a guide. Use of its content by anyone is the sole responsibility of that person and they assume all risk. Due to many variables that affect the torque-tension relationship like, human error surface texture, lubrication, etc. The only way to determine the correct torque is through experimentation under actual joint and assembly conditions.

Herman Cease

From: "Ben Kilminster" <bjk@fnal.gov>
To: "John L. Voirin" <voirin@fnal.gov>; "Erik Ramberg" <ramberg@fnal.gov>; "Juan Estrada Vigil" <estrada@fnal.gov>; "Herman Cease" <cease@fnal.gov>; "Dave Pushka" <pushka@fnal.gov>
Cc: "Ben Kilminster" <bjk@fnal.gov>
Sent: Thursday, February 05, 2009 3:16 PM
Subject: DAMIC lid test - fixture # 164

The engineering note lists the fixture capacity at 5,680 lbs,
therefore we needed to test it at 7,100 lbs.
The dynameter shows a total weight of 8360 lbs (lid is 1,100 lbs).
The weight is from 268 bricks, each 27 lbs.

Ben Kilminster was the witness.
Steve Jakubowkski was the crane operator.
Attached is the photo log.

Herman, can you add this to the engineering note ?

Measured Fixture Weight 1280 Lbs
Load Test Weight 7080 Lbs
Fixture Capacity = 5,680 lbs * 125% = 7100 lbs