Fermi National Accelerator Laboratory
Particle Physics Division

Mechanical Department Engineering Note

Number: *MD-Eng-311* **Date:** *14 Feb. 2011*

Project: *Dark Energy R&D*

Project Internal Reference:

Title: ***Mechanical Design of a Future 2k x 2k CCD Module***

Author(s): *Greg Derylo (derylo@fnal.gov)* *FNAL/PPD/MD*

Reviewer(s): ---

Key Words: *CCD*

Abstract/Summary:

A revised design for a 2k x 2k CCD pedestal-style module is presented as part of a generic R&D effort. The resulting module relies heavily on the existing DES CCD designs and even shares some parts and assembly tooling. The module assembly process is outlined. Temperature gradient, thermal distortion, and stress results are expected to be consistent with results from existing DES module designs. A focal plane support plate layout concept is shown.

Applicable Codes: *N/A*

1.0 INTRODUCTION

The 2k x 2k CCDs used for DES, of which there are numerous leftover sensors since there was one included on every wafer during production of the 2x4 DES CCDs, were packaged in a way that is likely not suitable for future experimental applications. The reason for this is historical; the DES focal plane support plate (FPSP) and vacuum interface boards (VIBs) were designed a year or more before the design of the 2x2 packages was begun. Therefore it was simply decided that the interface between the FPSP and the 2x2 CCDs would be the same as that for the larger 2x4 sensors. As a result, the DES 2x2 modules (drawing 436629) have a footprint roughly twice the size of the sensor itself.

In the interest of making the remaining sensors available for future use in as-yet-unforeseen applications, a new package design is being developed that moves all the readout, support, and mounting hardware into the shadow behind the CCD sensor itself. This will allow arrangement of sensors into a 4-side-buttable array for more flexible layout configurations.

The new sensor design relies very heavily on the successful DES 2x4 production CCD design (drawing 436580). Design of that module is discussed in References 1 through 5. That same design, adapted now for the smaller 2x2 sensor size, is shown in Figures 1 and 2 below. Details of the design are discussed in Section 2 below. New FEA studies have not been performed to investigate the new design due to its high level of similarity to several generations of existing modules and due to limited engineering resources.

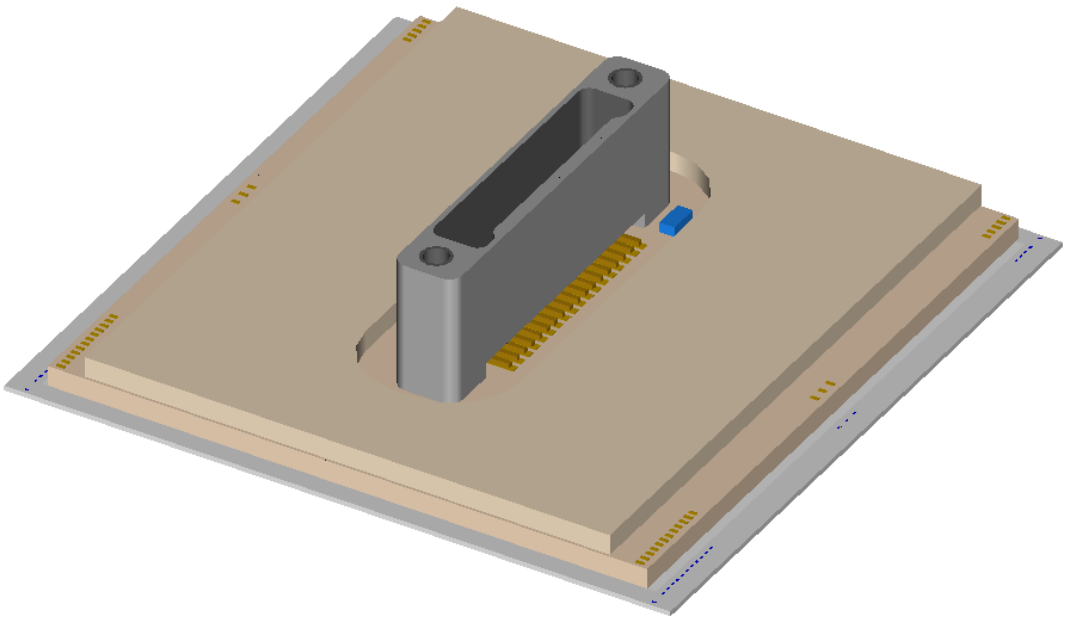

Figure 1: Image of the CCD with AlN readout board & AlN spacer.

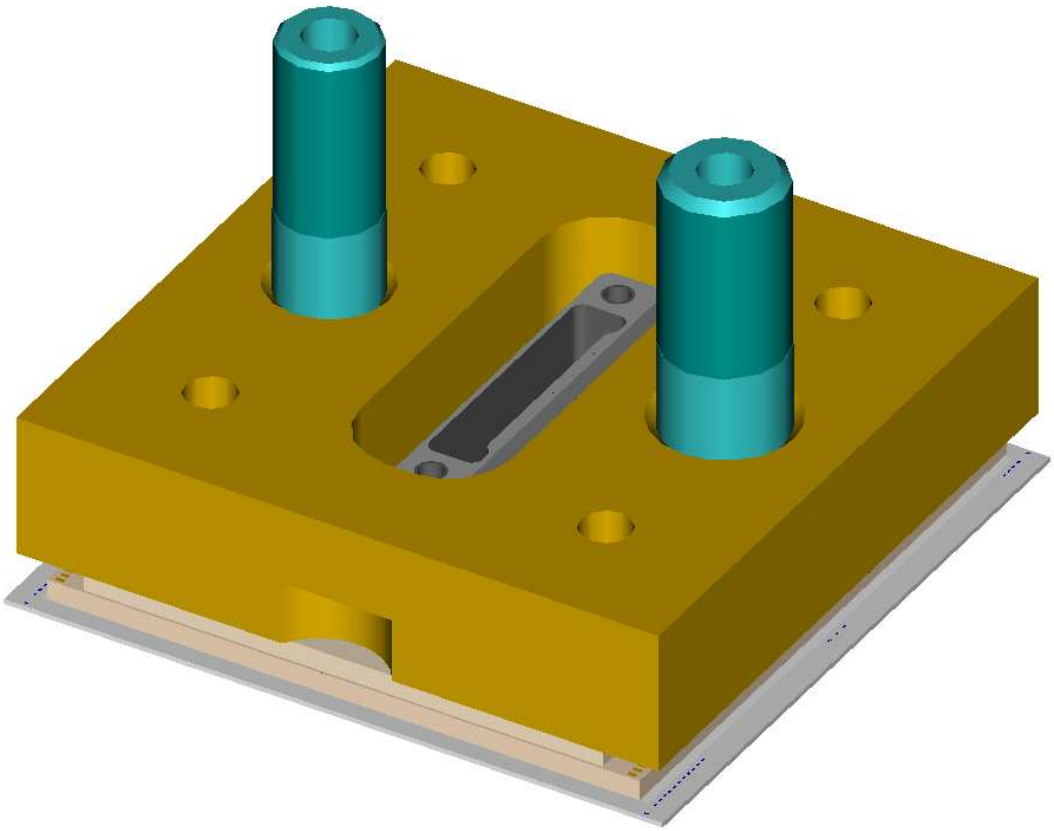

Figure 2: Image of the completed module with the Invar foot and mounting pins in place

This report documents several details of the design and discusses the assembly process. Design of a new focal plane support plate (FPSP) is outside the scope of this report since the design of such an object would be dependent on the needs of the experiment. However, a suggested FPSP cell layout with a form similar to that used for DES is also shown as a starting point of discussion for any future applications.

2.0 EVALUATION

The drawing numbers for the assemblies and parts are listed below.

Description	Drawing
Module Assembly	480616
CCD Subassembly	480517
2k x 2k CCD	436076
AlN Readout Board	480518
AlN Spacer	480519
Foot	480520
Mounting Pin (5mm)	436576
Mounting Pin (6mm)	436577

Various aspects of the module design are discussed further in the sections below.

2.1 ELEMENTS OF THE MODULE DESIGN

A brief discussion of each of the items in the module is included below.

CCD – The sensor is unchanged from the previous 2x2 module versions.

Double-Sticky Tape – Small tape squares will be used in the corners of the AlN board, as has previously been done on previous DES 2x4 and 2x2 CCDs as well as on pictureframe modules. Some of these squares will be in the active sensor area but at kept as small as is practical.

AlN Readout Board – The new board layout is very similar to that used for the 2x4 DES CCDs except the length of the board has been compressed for the smaller CCD size. The width and thickness are identical and the new length was chosen to preserve the same AlN-to-Si edge distances used on the 2x4 DES modules. The connector type and RTD placement are also carried over from the DES design.

AlN Spacer – This piece is shorter than the 2x4 DES design due to the smaller sensor size. In addition, the width reflects the distance across of the narrowest parts of the 2x4 spacer, where there are cutouts in the wirebond pad regions. Wider regions in between bondpad fields were not incorporated into the new design since the spaces between these fields are so small for the shorter sensor.

Invar Foot – The foot design is similar to the DES 2x4 module design. Similarities are listed below:

- Material
- Plating
- Foot thickness
- Surface ‘A’ flatness specification
- Mounting pin hole sizes & tolerances (but not locations)
- Loading rod hole sizes (but not locations)
- Readout board connector cutout geometry
- Serial number engraving to be used as module ID number

There are also several differences in the foot design, as discussed in the following list:

- Shorter length due to smaller sensor size
- Larger width and no beveled edges since wirebond repair is not possible with this new design.
- Mounting pin locations changed since they no longer fit in line with the connector body
- Loading rod hole locations changed
- Cutout shown on the left face in Figure 2 above provides access to point on AlN spacer for epoxy application since the foot otherwise totally overlaps the ceramic.

Mounting Pins – These pins are identical to the ones used in the 2x4 DES modules.

Epoxy – The same epoxies used for the DES CCD module are to be used here: Epotek 301-2 for all joints except the connector-to-foot reinforcement, which uses 3M Scotchweld 2216.

Weight Estimate – The weights for these components are estimated below.

CCD =	(32.67 * 33.32 * 0.25) * 0.00233 = 0.63 g
Epoxy joint #1 =	(30.99 * 29.97 * 0.10) * 0.00095 ~ 0.1 g
AlN readout board =	7.1 g (actual weight of 2x4 V1 board with Airborn connector & RTD) – [(61.72-30.99) * 29.97 * 1.016 * 0.00326] = 4.1 g
Epoxy joint #2 =	~0.1 g
AlN spacer =	2.2 g (measured)
Epoxy joint #3 =	~ 0.1 g
Foot =	(5769 mm^3 from CAD model) * 0.00805 = 46.4 g
5mm Pin =	2.7 g (measured)
6 mm Pin =	4.0 g (measured)
TOTAL =	60.3 g

2.2 MODULE ASSEMBLY

The basic assembly outline is shown below. Existing hardware is being used where possible but at least some new tooling is being fabricated for each major assembly step. It is not yet decided if a detailed, step-by-step procedure will be written for each part of this assembly process as the existing DES S3-type 2x4 module packaging procedure is largely applicable here as well (DES docdb #104). As has been done for previously-constructed units, paper travelers will be maintained for each CCD module to keep track of part serial numbers, technician name & date, special comments, etc.

1. Clean feet, pins, and AlN spacers as they are received
2. Inspect parts
3. Install pins into feet
4. Inspect installed pins
5. Construct AlN readout board subassy (fixture drawing 480521)
    a. Receive and clean AlN readout board
    b. Install conductive foam into Airborn connector to short pins together
    c. Use jig to position spacer (with double-stick tape squares) onto readout board
    d. Apply epoxy and allow to cure
6. CCD installation (fixture drawing 480523)
    a. Install double-stick tape squares to underside of ALN board
    b. Move CCD from Gelpak case to assembly jig
    c. Use jig to position AlN onto Si
    d. Transfer assembly to precision-flat vacuum granite plate
    e. Apply epoxy between CCD and AlN readout board
7. Wirebonding (fixture drawing 480526)
    a. Transfer CCD to wirebonding carrier plate
    b. Use an ESD-safe container to take it to the Lab D bonding room
    c. Wirebond the 40 connections between the AlN board and the CCD
    d. Repackage fixture in the ESD-safe container and return to Lab C south
8. Foot Gluing (fixture drawing 480530)
    a. Replace connector conductive foam with shorting plug
    b. Transfer CCD to fixture
    c. Use jig to position foot over CCD subassembly
    d. Apply epoxy between foot and AlN spacer
9. Module thickness inspection

    a. Transfer CCD gluing jig top plate with module still attached to the QC4000 CMM
    b. Measure thickness over a course grid
    c. Measure edges relative to mounting features
    d. Return to workbench
10. Transfer module to storage box (drawing 480530)
11. Apply epoxy between electrical connector and foot
12. Clean contamination from CCD surface as necessary
13. Deliver completed module for electrical and flatness testing

2.3 MODULE THERMAL ANALYSIS

No FEA studies were performed in support of this new 2x2 design. Boundary and operating conditions for unforeseen future applications are by definition unknown.

2.4 MODULE DEFORMATION AND STRESS ANALYSIS

No FEA studies were performed in support of this new 2x2 design. For operation at 173K, page 11 of Reference 1 summarizes the expected stress levels calculated for various studies performed for related CCD module designs. At this temperature level, stresses and thermally-induced deformations are expected to be similar for this new 2x2 module layout as well.

2.5 MODULE INTERFACE WITH THE FOCAL PLANE SUPPORT PLATE (FPSP)

As mentioned above, the mounting plate into which the CCDs mount will be designed to best fit the given experimental needs. A concept for cell layout based on a set of conditions similar to those applicable to DES is shown in the Figures below. Mounting is assumed to be similar to that shown in FNAL drawings 436406 (layout configuration concept) and 480066 (DES focal plane assembly). No cable restraint is shown but use of some means to limit the impact of cable motion on the module is recommended.

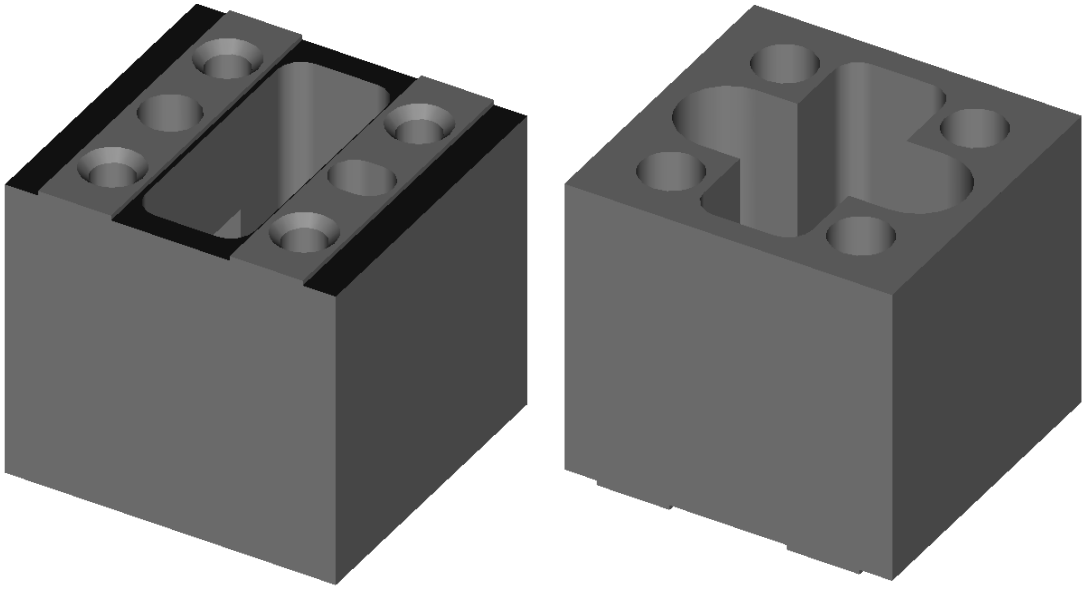

Figure 3: Front (left) and rear (right) views of a sample FPSP cell.
The CCD foot sits on the elevated regions shown on the left view.

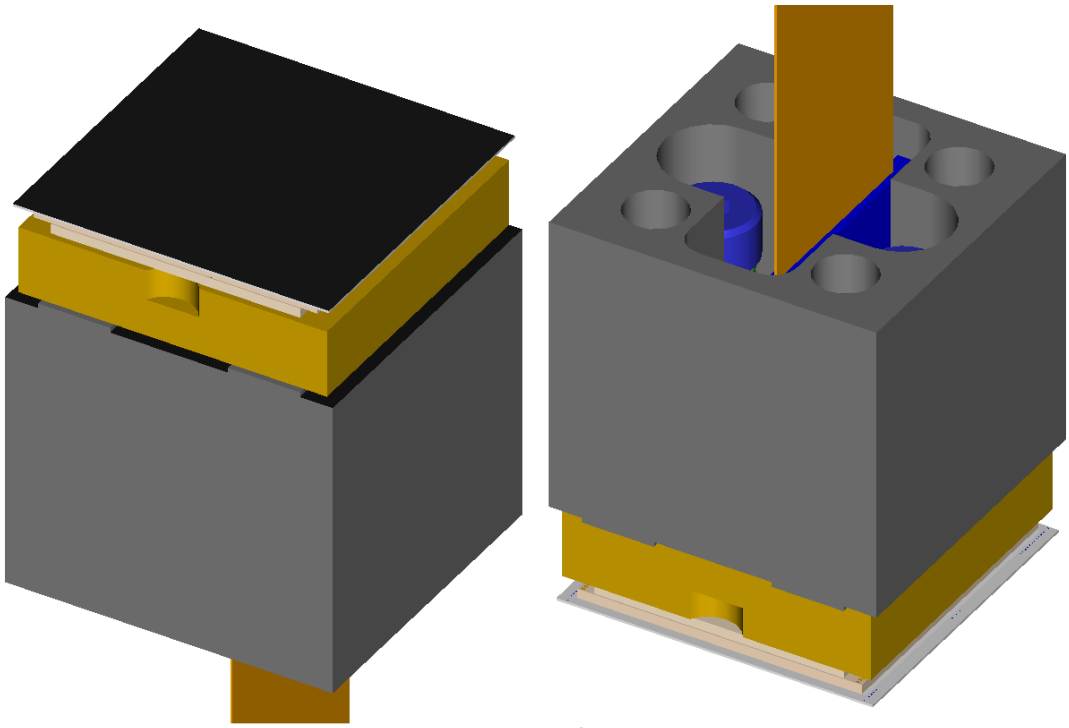

Figure 4: Installed CCD with the existing flex cable design & screws/springs

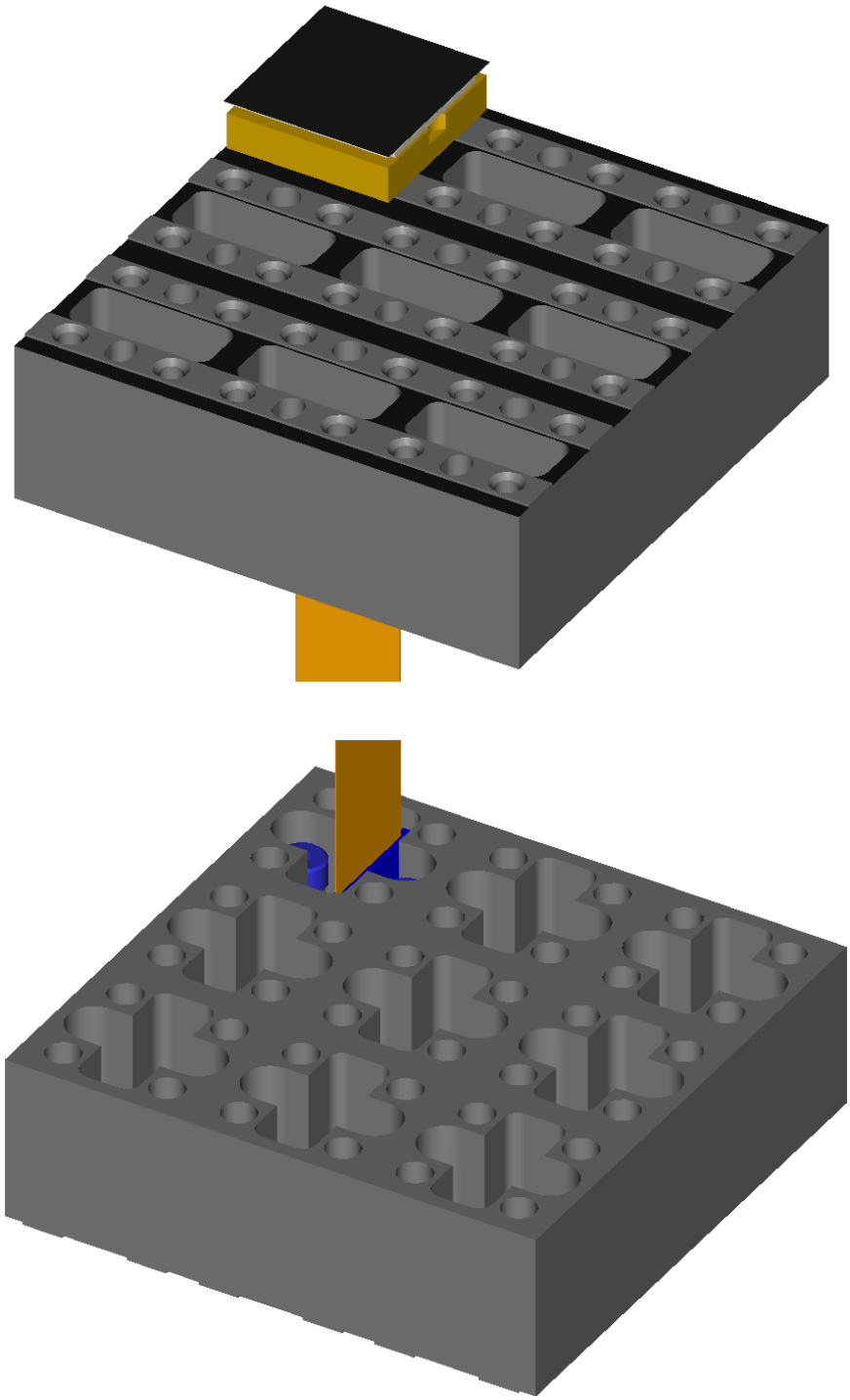

Figure 5: Sample FPSP Views

2.6 MODULE STORAGE BOX

A box similar to the one used for the DES 2x4 modules has been designed for compatibility wit the existing CCD module test stands at FNAL's Silicon Detector Center.

3.0 CONCLUSIONS

The design of the new 2k x 2k pedestal-style module has been presented. Based heavily on the DES module design, this package is expected to be constructed to tolerances and to perform at levels consistent with DES experience for operation at temperatures near 173K.

Module parts and the necessary assembly tooling is on order to assembly as many as 25 of these packages for development testing.

4.0 REFERENCES

1. MD-ENG-171, "Mechanical Design of the DES V1 2k x 2k CCD Module," by Greg Derylo, 24 Oct 2008 [DES docdb #2254]
2. MD-ENG-134, "Mechanical Design of the DES V2.1 2k x 4k CCD Module," by Greg Derylo, 19 Oct 2007 [DES docdb #979].
3. MD-ENG-110, "Updated Thermal Study of the DES 2k x 4k CCD Module V1 Design," by Greg Derylo, 9/5/06 [DES docdb #173].
4. Derylo, Greg et al., "Assembly of the Dark Energy Survey CCD Imager," Proc. SPIE, Volume 7739 (2010) [DES docdb #3980].
5. Derylo, Greg et al., "0.25mm-Thick CCD Packaging for the Dark Energy Survey Camera Array," Proc. SPIE, Volume 6276 (2006) [DES docdb #59].