Fermilab

Particle Physics Division
Mechanical Department Engineering Note

Number: MD-ENG-310 Date: February 1, 2011

Project Internal Reference: 425-2.9.1.4

Project: NOvA

Title: Block Pivitor-Hilman Roller Guide Stress Analysis

Author(s): Mike Zuckerbrot

Reviewer(s): DAVE PUSHKA 2-1-2011

Key Words: NOvA, Ash River, Block pivitor, Hilman guide

Applicable Codes: AISC Manual of Steel Construction; Allowable stress design

Abstract Summary: This note analyzes stresses and deflections in the roller guide weldments used to keep the Hilman rollers and the block pivitor on track. Max deflection of the rails with respect to each other was taken to be ¼''.

Table of Contents

I. Discussion p. 4

II. .Pdf's of Hilman Roller Guides Design and 3-D Model Used for Analysis p. 5-9

III. Load Calculation and Allowable Stresses p. 10-11

IV. FEA analysis

- **A.** Two models shown and explained p. 12
- **B.** Restraints, load placement, and mesh p. 13
- **C.** Stresses (by points of interest) p. 14-15
  1. Reaction forces p. 15
  2. Back load plate weld (poi A) p. 16
  3. Front load plate weld (poi B) p. 17
  4. Top gusset weld (poi C) p. 18
  5. Front gusset weld (poi D) p. 19
  6. Attachment lip (poi E) p. 20
  7. Second model comparison p. 21-22
- **D.** Deformation p. 23
  1. Weld model p. 23
  2. No weld model p. 24

V. Summary p. 25

I. Discussion

The following note analyzes stresses and deformation in the Hilman roller guides used in the NOvA block pivitor. The block pivitor will roll on two parallel tracks, which are taken to have a maximum variance of ¼'' relative to each other. The basic concept of the roller guides is to keep the pivitor moving on the tracks by a Camrol heavy duty bearing on each side, both on the front and back. There are two different basic roller guides; the "*double guide*", allows both Camrol bearings to travel forward and backward against the spring washers, and the "*single guide*" which allows motion in only one bearing.

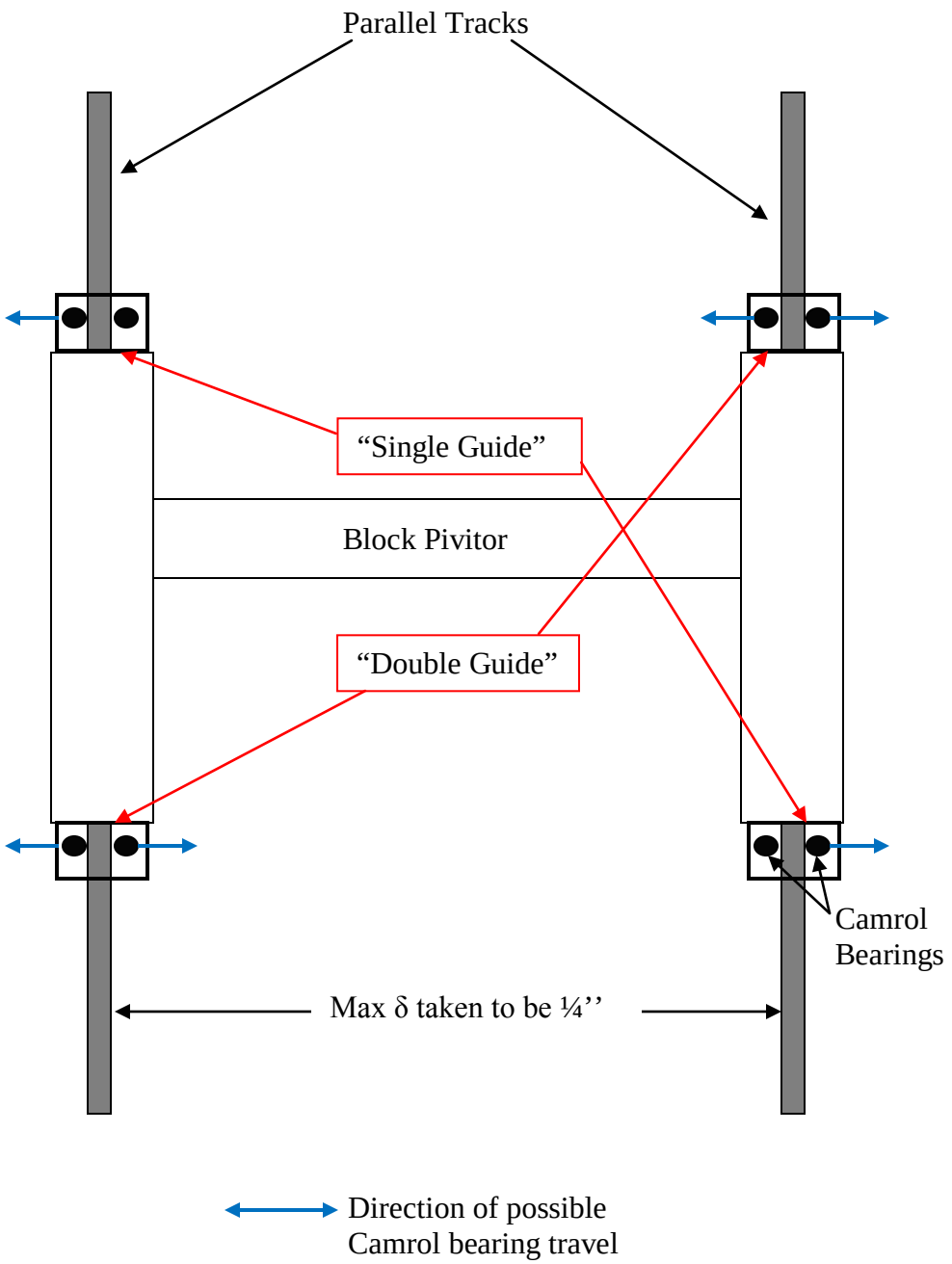

REV	DESCRIPTION	DRAWN	DATE
		APPROVED	DATE

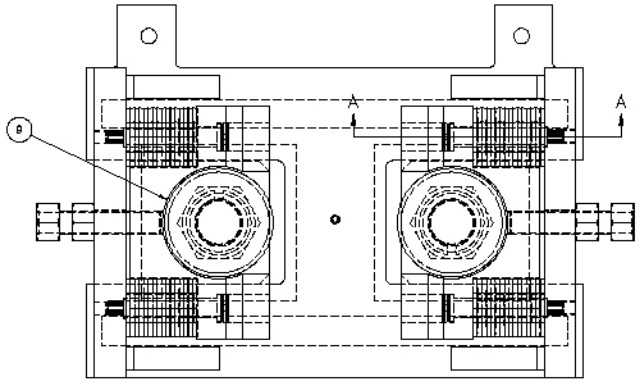

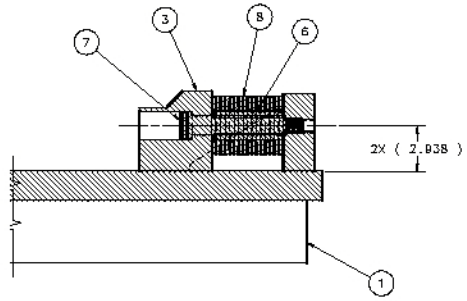

SECTION A-A

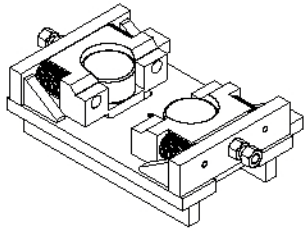

ISOMETRIC VIEW
SCALE 1/8:1

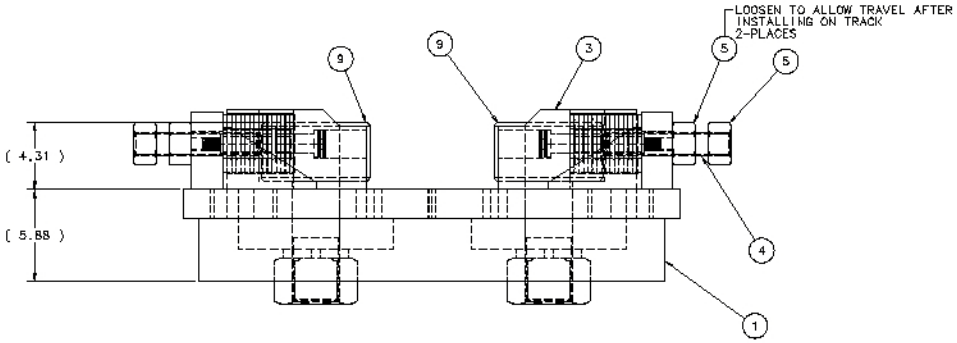

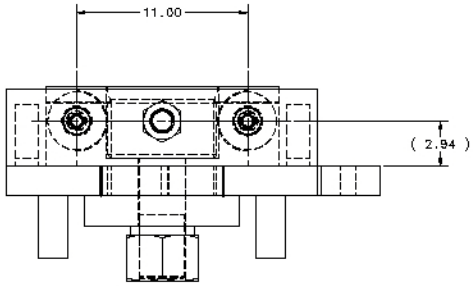

EST WT - 1081.34 LBS

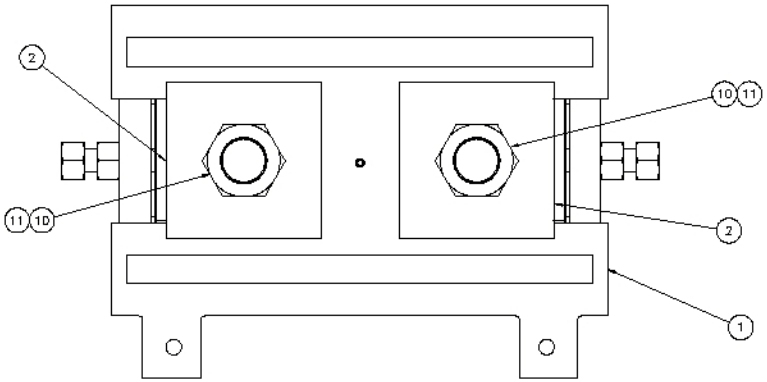

ITEM	PART NO.	DESCRIPTION OR SIZE	QTY.
11	9714K81	SPRING DISC WASHER;3.047 I.D. X 3.817 O.D. X .228 THK.;CARBON STEEL GR. 1074;;McMASTER-CARR	2
10	90490A280	HEAVY HEX NUT;3-12UNC; CARBON STEEL GR 2;McMASTER-CARR	2
9	CFH-6-S	SEALED CAM FOLLOWER BEARING; HEAVY STUD;McGILL BEARINGS	2
8	9712K482	SPRING DISC WASHER 1.437 I.D. X3.75 O.D. X .201 THK CARBON STEEL GR 1074 McMASTER CARR	64
7	91259A323	SHOULDER SCREW Ø1 1/4 SHOULDER X 7/8-9 UNC X 8.00 LG PLAIN STEEL McMASTER CARR	4
6	MC-486402	SHIM SPACER	4
5	COM'L	HEAVY HEX NUT 1 1/2-6 UNC CARBON STEEL GR 5	4
4	MC-486423	THREADED ROD 1 1/2-6 UNC X 8.00 LG	2
3	MC-486400	BLOCK PRELOAD	2
2	MD-486401	PLATE SLIDE	2
1	MC-486406	GUIDE ROLLER WELDMENT	1

PARTS LIST

UNLESS OTHERWISE SPECIFIED			ORIGINATOR	D.PUSHKA	02-NOV-2010
.XX	.XXX	ANGLES	DRAWN	S.KINDELBERGER	16-NOV-2010
± .05	± ***	± ***	CHECKED		
			APPROVED		
			USED ON		
			MATERIAL	SEE PARTS LIST ABOVE	

1. BREAK ALL SHARP EDGES .015 MAX.
2. DO NOT SCALE DRAWING.
3. DIMENSIONS BASED UPON ASME Y14.5M-1994.
4. MAX. ALL MACH. SURFACES 250
5. DRAWING UNITS: U.S. INCH

FERMI NATIONAL ACCELERATOR LABORATORY
UNITED STATES DEPARTMENT OF ENERGY

NOVA-ASH RIVER-EQUIP HANDLING
LIFTING FIXTURES
DOUBLE GUIDE ROLLER ASSEMBLY

SCALE	DRAWING NUMBER	SHEET	REV
1/4:1 & NOTED	3929.220-MD-486407	1 OF 1	

CREATED WITH : Ideas12NXSeries | GROUP: PPD/MECHANICAL DEPARTMENT

REV	DESCRIPTION	DRAWN	DATE
		APPROVED	DATE

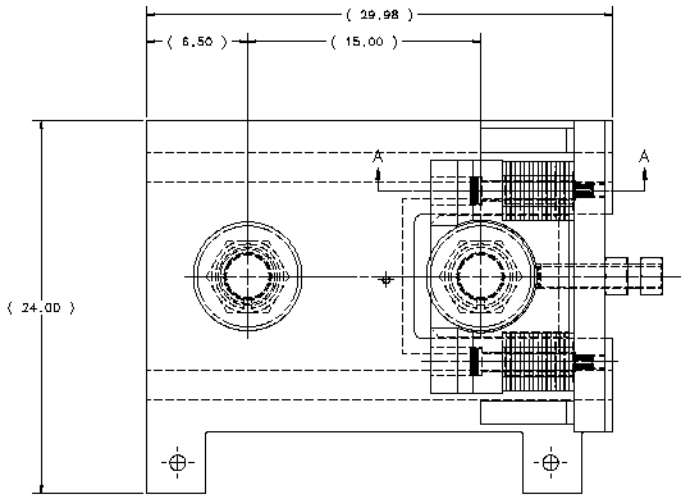

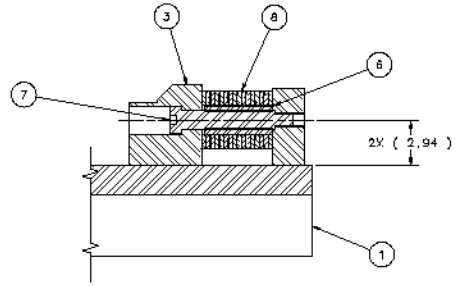

SECTION A–A

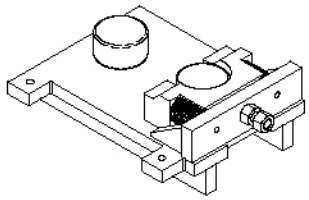

ISOMETRIC VIEW
SCALE= 1:6

EST. WT. = 813.12 LBS.

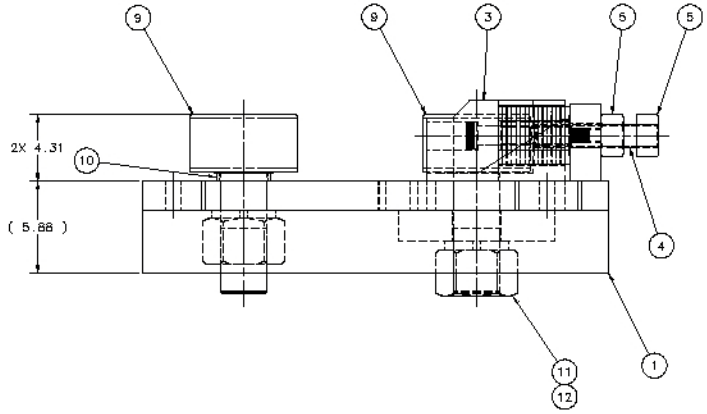

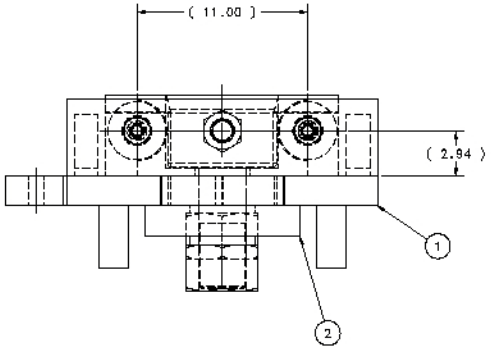

ITEM	PART NO.	DESCRIPTION OR SIZE	QTY.
12	90490A280	HEX NUT;3-12UNC; CARBON STEEL GR.2;MCMASTER-CARR	2
11	9714K81	SPRING DISC WASHER;3.047 I.D. X 3.917 O.D. X .268 THK.;CARBON STEEL GR. 1074;MCMASTER-CARR	2
10	COM'L.	PIPE; 3.00 X .216 WALL X .50 LG.; CARBON STEEL ASTM A512	1
9	CFH-8-S	SEALED CAM FOLLOWER BEARING; HEAVY STUD;McGILL BEARINGS	2
8	9712K482	SPRING DISC WASHER;1.837 I.D. X 3.75 O.D. X .281 THK.;CARBON STEEL GR. 1074;MCMASTER-CARR	32
7	91259A323	SHOULDER SCREW;#1-1/4 SHOULDER X 7/8-9UNC X 6.00 LG.;PLAIN STEEL;MCMASTER-CARR	2
6	MC-486402	SHIM SPACER	2
5	COM'L.	HEAVY HEX NUT;1-1/2-6UNC; CARBON STEEL GR.8	2
4	MC-486423	STUD	1
3	MD-486400	BLOCK PRELOAD	1
2	MC-486401	PLATE SLIDE	1
1	MD-486394	WELDMENT GUIDE ROLLER	1

PARTS LIST

UNLESS OTHERWISE SPECIFIED			ORIGINATOR	J.RAUCH	15-NOV-2010
.XX	.XXX	ANGLES	DRAWN	B.ELLISON	15-NOV-2010
± .05	± ***	± ***	CHECKED		
			APPROVED		
			USED ON		
			MATERIAL	SEE PARTS LIST ABOVE	

1. BREAK ALL SHARP EDGES .010 MAX.
2. DO NOT SCALE DRAWING.
3. DIMENSIONS BASED UPON ASME Y14.5M-1994.
4. MAX. ALL MACH. SURFACES 125
5. DRAWING UNITS:U.S. INCH

FERMI NATIONAL ACCELERATOR LABORATORY
UNITED STATES DEPARTMENT OF ENERGY

NOVA-EQUIPMENT HANDLING
LIFTING FIXTURES
PRELOAD GUIDE-SINGLE

SCALE	DRAWING NUMBER	SHEET	REV
1:4 & AS NOTED	3929.220-MD-486399	1 OF 1	

CREATED WITH : Ideas12NXSeries GROUP: PPD/MECHANICAL DEPARTMENT

REV	DESCRIPTION	DRAWN	DATE
		APPROVED	DATE

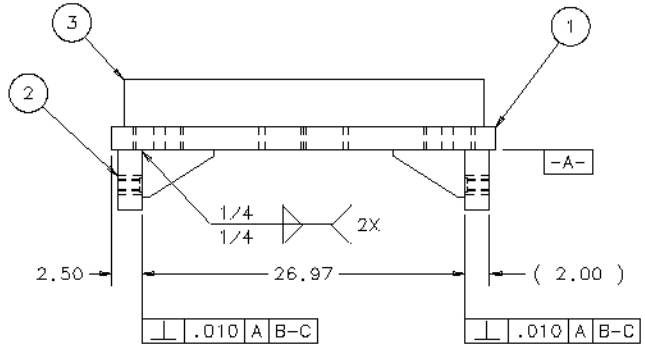

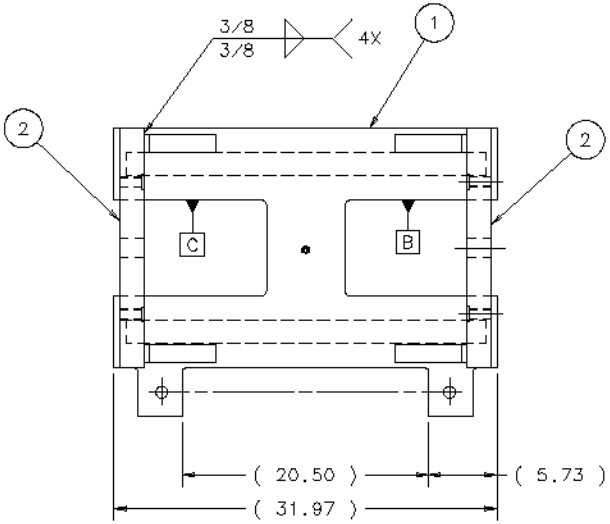

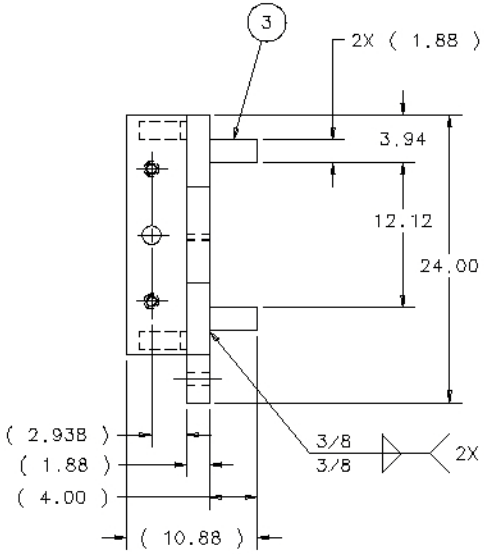

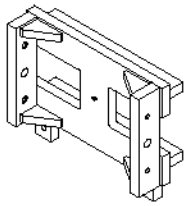

ISOMETRIC VIEW
SCALE 1/16:1

EST WT - 510 LBS

ITEM	PART NO.	DESCRIPTION OR SIZE	QTY.
4	MB-486434	GUSSET 50 X 4 X 6	4
3	COM'L	FLAT 1 7/8 X 4 X 29.98 LG; CARBON STEEL, A-36	2
2	MB-486391	BAR PRE LOAD BRACE	2
1	MC-486421	BAR HILMAN DOUBLE CONNECTING GUIDE	1

PARTS LIST

UNLESS OTHERWISE SPECIFIED			ORIGINATOR	D.PUSHKA	02-NOV-2010
.XX	.XXX	ANGLES	DRAWN	S.KINDELBERGER	16-NOV-2010
± .05	± ---	± ---	CHECKED		
			APPROVED		
			USED ON	MD-486407	
			MATERIAL	SEE PARTS LIST ABOVE	

1. BREAK ALL SHARP EDGES .015 MAX.
2. DO NOT SCALE DRAWING.
3. DIMENSIONS BASED UPON ASME Y14.5M-1994
4. MAX. ALL MACH. SURFACES 250
5. DRAWING UNITS: U.S. INCH

FERMI NATIONAL ACCELERATOR LABORATORY
UNITED STATES DEPARTMENT OF ENERGY

NOVA-EQUIPMENT HANDLING LIFTING FIXTURES GUIDE ROLLER WELDMENT

SCALE	DRAWING NUMBER	SHEET	REV
1/8:1 & NOTED	3929.220-MC-486406	1 OF 1	

CREATED WITH : Ideas12NXSeries | GROUP: PPD/MECHANICAL DEPARTMENT

NOTE:

1. ALL WELDS TO BE E70XX OR EQIVALENT.
2. ALL WELDING SHALL BE IN ACCORDANCE WITH ANSI/AWS D1.1 "STRUCTURAL WELDING CODE - STEEL
3. ALL WELDS SHALL BE MADE IN A SEQUENCE THAT WILL BALANCE THE APPLIED WELDING HEAT WHILE THE WELDING PROGRESSES. THE PROCEDURE AND SEQUENCE SHALL BE DESIGNED TO MINIMIZE DISTORTION AND SHRINKAGE STRESSES
4. ALL WELDS SHALL BE VISUALLY INSPECTED AND DYE PENETRANT INSPECTED TO DETECT SURFACE AND SUBSURFACE CRACKS AND DISCONTINUITIES IN ACCORDANCE WITH ANSI/AWS D1.1 "STRUCTURAL WELDING CODE - STEEL
5. ALL WELDS THAT FAIL AN INSPECTION SHALL BE REPAIRED IN ACCORDANCE WITH ANSI/AWS D1.1 "STRUCTURAL WELDING CODE - STEEL
6. PAINT WITH PRIMER DAMP PROOF RUST-OLEUM NO 769 OR EQUIVALENT

REV	DESCRIPTION	DRAWN	DATE
		APPROVED	DATE

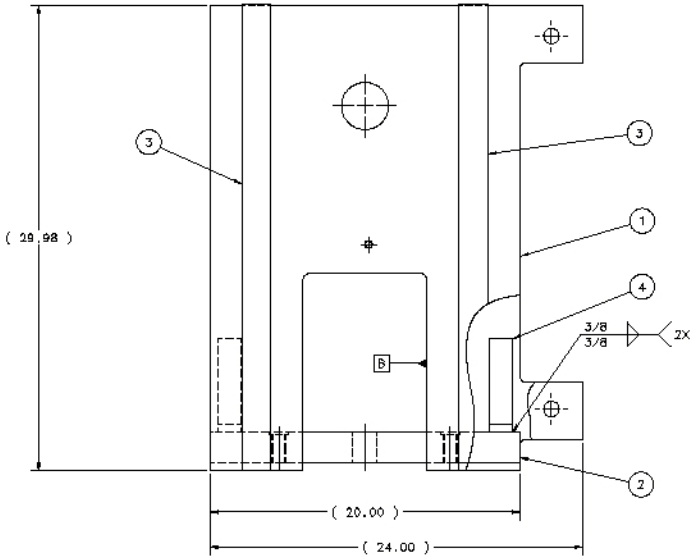

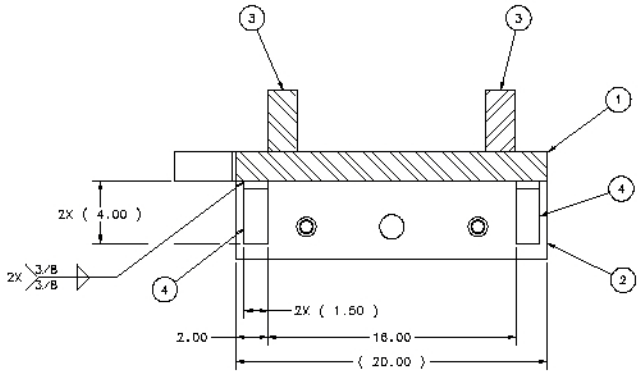

SECTION A-A

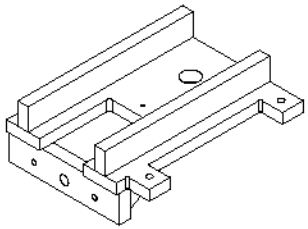

ISOMETRIC VIEW
SCALE- 1:8

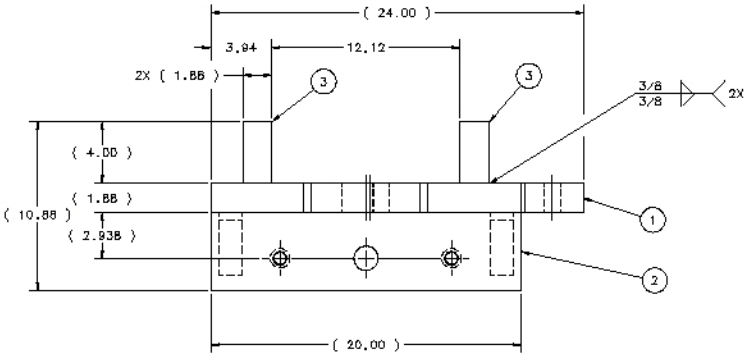

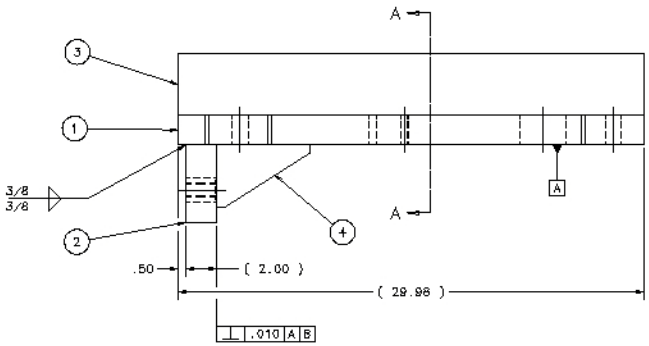

EST. WT. = 470 LBS.

NOTE:

1. ALL WELDS TO BE E70XX OR EQIVALENT.
2. ALL WELDING SHALL BE IN ACCORDANCE WITH ANSI/AWS D1.1 "STRUCTURAL WELDING CODE - STEEL".
3. ALL WELDS SHALL BE MADE IN A SEQUENCE THAT WILL BALANCE THE APPLIED WELDING HEAT WHILE THE WELDING PROGRESSES. THE PROCEDURE AND SEQUENCE SHALL BE DESIGNED TO MINIMIZE DISTORTION AND SHRINKAGE STRESSES.
4. ALL WELDS SHALL BE VISUALLY INSPECTED AND DYE PENETRANT INSPECTED TO DETECT SURFACE AND SUBSURFACE CRACKS AND DISCONTINUITIES IN ACCORDANCE WITH ANSI/AWS D1.1 "STRUCTURAL WELDING CODE - STEEL".
5. ALL WELDS THAT FAIL AN INSPECTION SHALL BE REPAIRED IN ACCORDANCE. WITH ANSI/AWS D1.1 "STRUCTURAL WELDING CODE - STEEL".
6. PAINT WITH PRIMER DAMP PROOF RUST-OLEUM NO 769 OR EQUIVALENT.

ITEM	PART NO.	DESCRIPTION OR SIZE	QTY.
4	MB-486434	GUSSET;1-50 X 4 X 6	2
3	COM'L.	FLAT;1-7/8 X 4 X 29.98 LG.; CARBON STEEL A-36	2
2	MB-486391	BAR PRE-LOAD BRACE	1
1	MC-486393	BAR HILMAN CONNECTING GUIDE	1

PARTS LIST

UNLESS OTHERWISE SPECIFIED			ORIGINATOR	J.RAUCH	15-NOV-2010
.XX	.XXX	ANGLES	DRAWN	B.ELLISON	15-NOV-2010
± .05	± ***	± ***	CHECKED		
1. BREAK ALL SHARP EDGES .015 MAX. 2. DO NOT SCALE DRAWING. 3. DIMENSIONS BASED UPON ASME Y14.5M-1994. 4. MAX. ALL MACH. SURFACES 250 √ 5. DRAWING UNITS: U.S. INCH			APPROVED		
			USED ON		
			MATERIAL	SEE PARTS LIST ABOVE	

FERMI NATIONAL ACCELERATOR LABORATORY
UNITED STATES DEPARTMENT OF ENERGY

NOVA-EQUIPMENT HANDLING
LIFTING FIXTURES
WELDMENT GUIDE ROLLER

SCALE	DRAWING NUMBER	SHEET	REV
1:4 & AS NOTED	3929.220-MD-486394	1 OF 1	

CREATED WITH : Ideas12NXSeries | GROUP: PPD/MECHANICAL DEPARTMENT

II. .Pdf's (previous pages) and Discussion of Solid Model Used in Analysis

It can be seen from the above engineering drawings that there are two different Hilman Roller guides used for the block pivitor. The first shown is the "double guide" (the second is the double guide's weldment), which allows for the pre-load brace and Camrol roller motion on both sides. The third and fourth drawings shown are the "single guide" and its weldment. The single guide only has the ability for motion on one side. With the weldment being the element under investigation, and with the single and double weldment undergoing similar and or symmetrical type stresses; the single guide weldment (engineering drawing 486394) was chosen as the best model to analyze. Two versions of the model were analyzed; and loads, restraints, stresses, and deformations will be detailed in section IV.

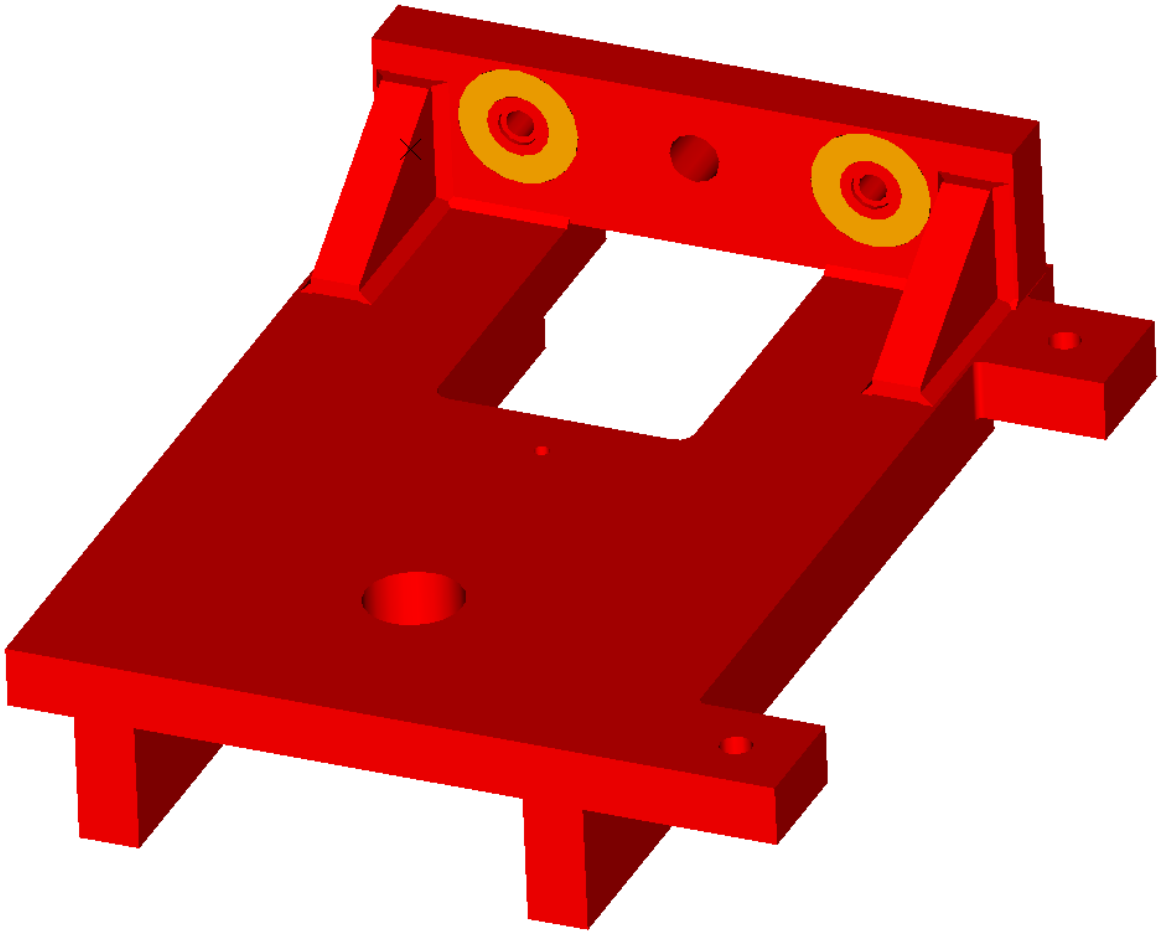

Model used for analysis shown above. This is the single guide weldment, with the back slot used for bearing motion, and the front hole used for the immobile bearing.

III. Load Calculation and Allowable Stresses

The movable bearings in the guides are set up to move against a set of sixteen spring washers on each side as illustrated below. These spring washers are the sole transmitter of load to the weldment, and the inner/outer diameters are illustrated in the model which can be seen as the yellow rings in the previous figure. Stresses to be examined are all weld stresses.

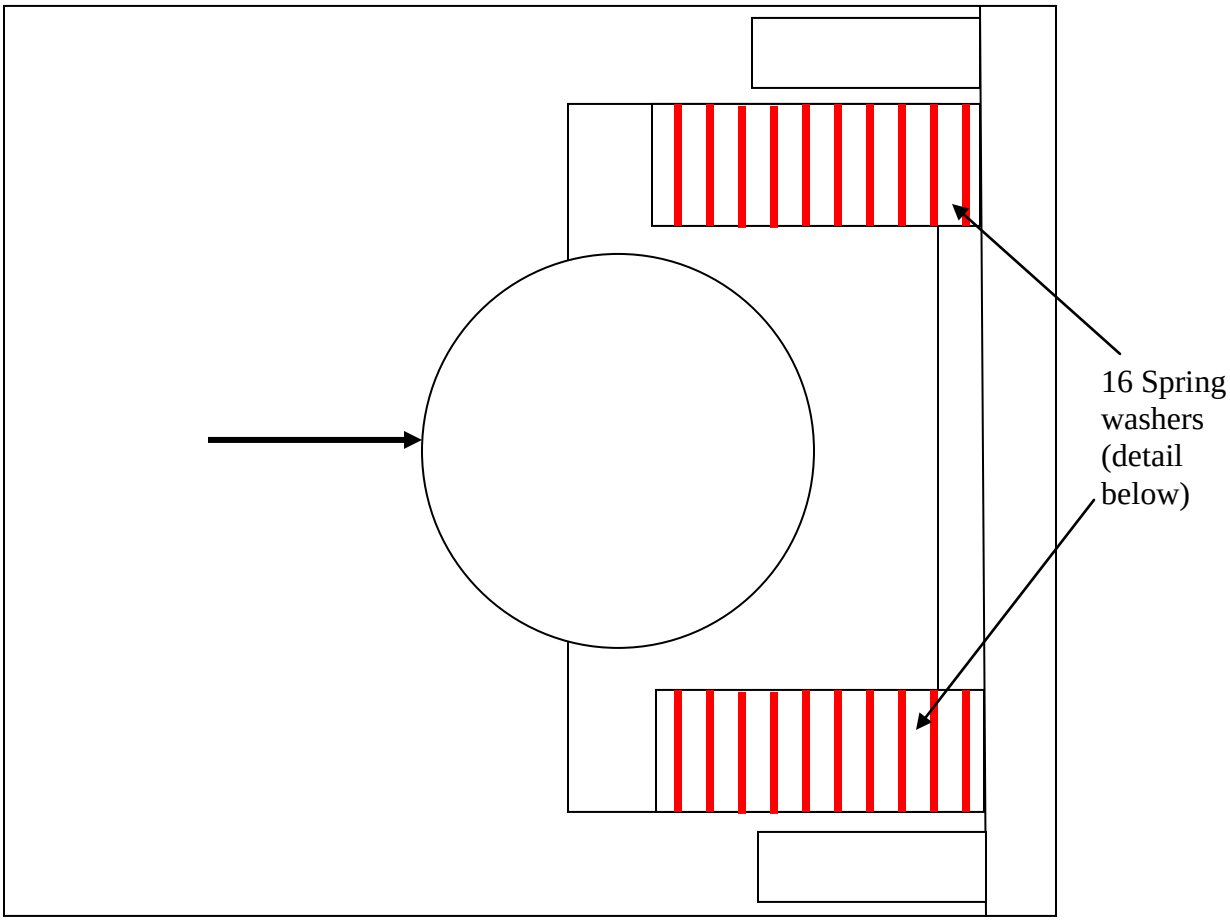

Spring washer detail

Disc Springs

This product matches all of your selections.

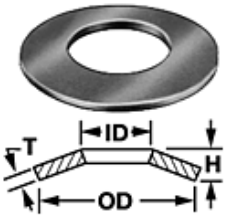

Part Number: 9712K482

Type	Belleville Disc Springs
Material	Steel
Steel Type	Grade 1074 High-Carbon Steel
Minimum Inside Diameter	1.937"
Maximum Outside Diameter	3.750"
Thickness	.281"
Overall Height	.360"
Load	16,890 lbs.
Deflection at Load	.063"
Flat Load	24,348 lbs.
Specifications Met	Not Rated

→With the total variance of the tracks taken to be ¼'' max, and with 16 spring washers on each side: _____

→The spring washers k coefficient can be determined with the given information in the spec: _____ _____

Allowable Stresses: The AISC Manual of Steel Construction; Allowable Stress design, 9th edition, chapter 5 section J, Table J2.5 "Allowable Stress on Welds"; lists the max allowable stress on fillet welds with shear on the effective area as 0.30 x nominal tensile strength of weld material in ksi. E70XX filler rod to be used.

➔ 0.30 x 70 ksi =

IV. FEA Analysis

A. The two models

Two models were analyzed. The geometric structures of both models are exactly the same, with the key difference being the way the component connections were set up. Close ups of the connections are shown below. The realistic model, of which most of the analysis will focus, is the top screen capture. It can be seen that the welds are modeled as triangular entities with a small (0.05'') gap left between the components to focus the stresses on the welds as in reality. The second model (bottom screen capture) is modeled without welds as a solid component. This less realistic model is used for comparison to the "weld model", where the small gaps cause geometry induced high stress concentrations.

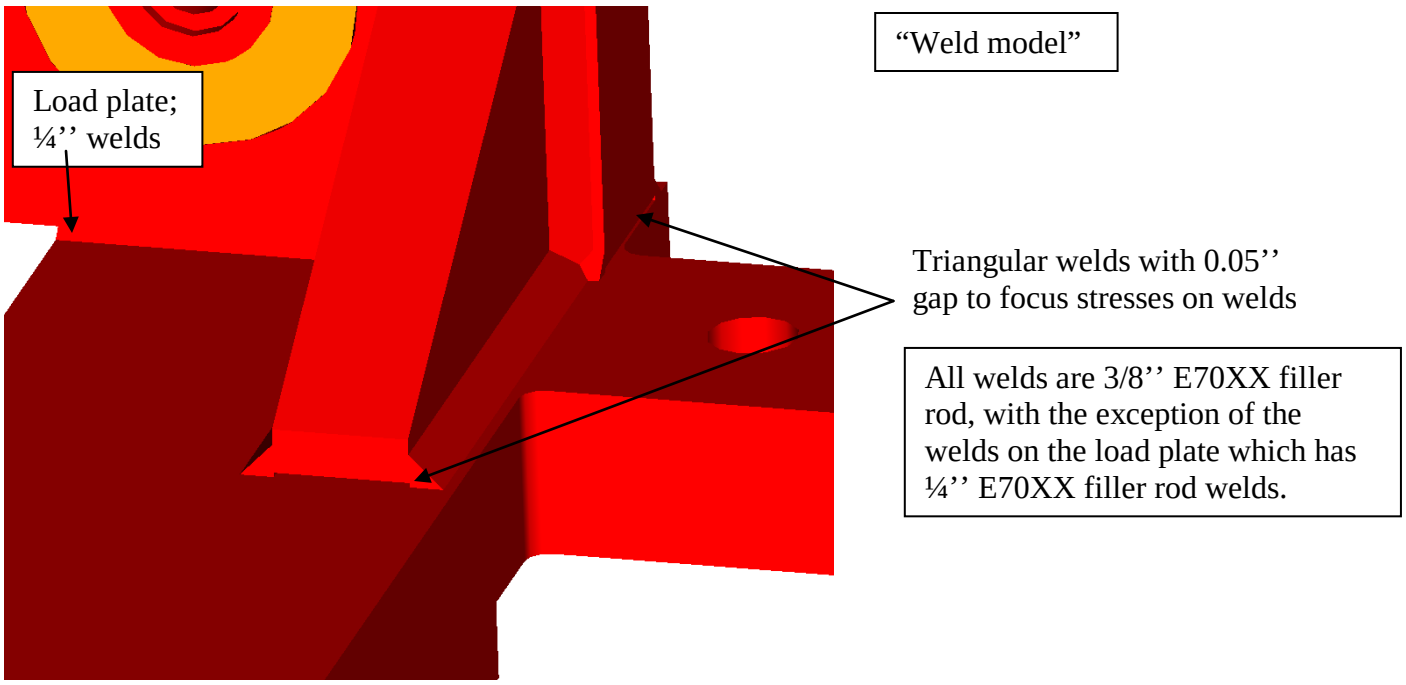

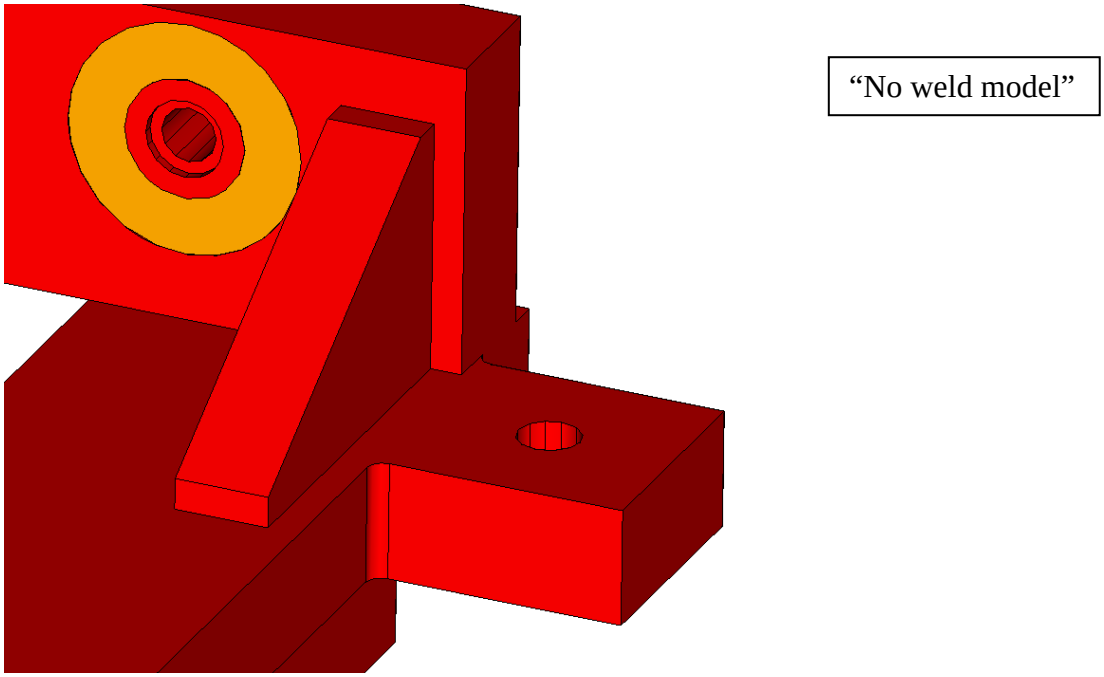

B. Restraints, load, and mesh

The restraints and loads can be seen below. The restraints are located on the surfaces of the two bolt holes on the attachment lips. They are restrained against translation and rotation in all directions. The loads are located on the surface the spring washers are in contact with (shown in orange), with an inner diameter of 1.937'' and an outer diameter of 3.75'', at a magnitude of 4,189 lbs on each side as calculated above.

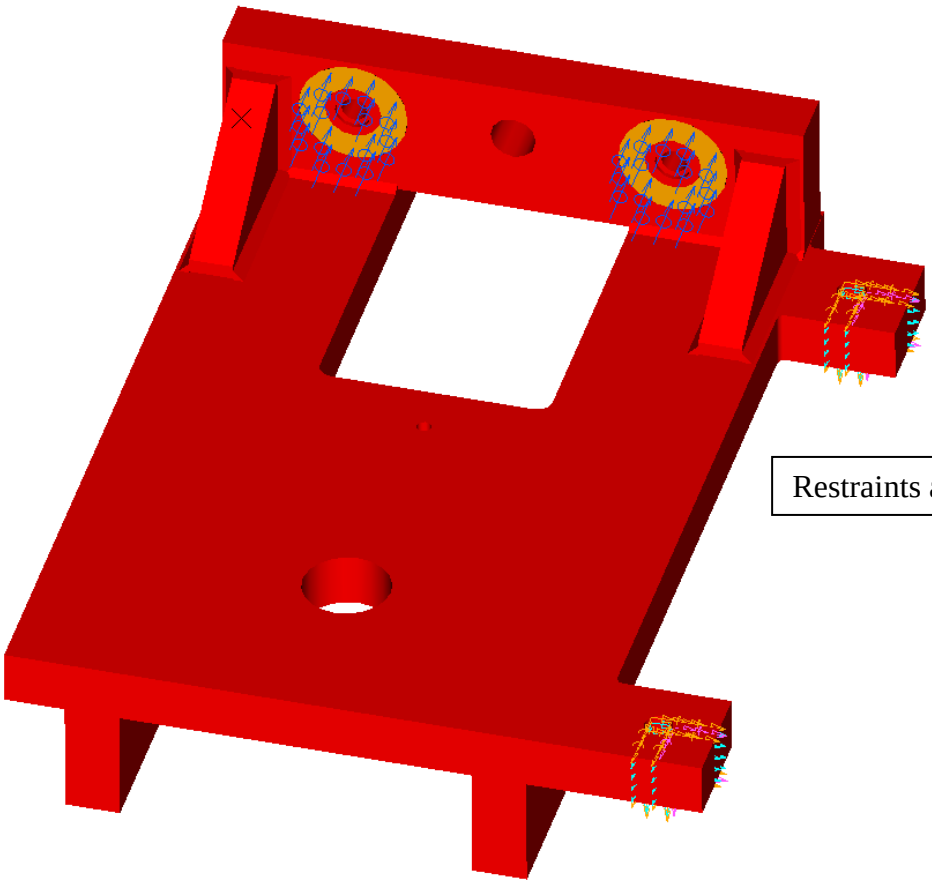

Restraints and loads shown

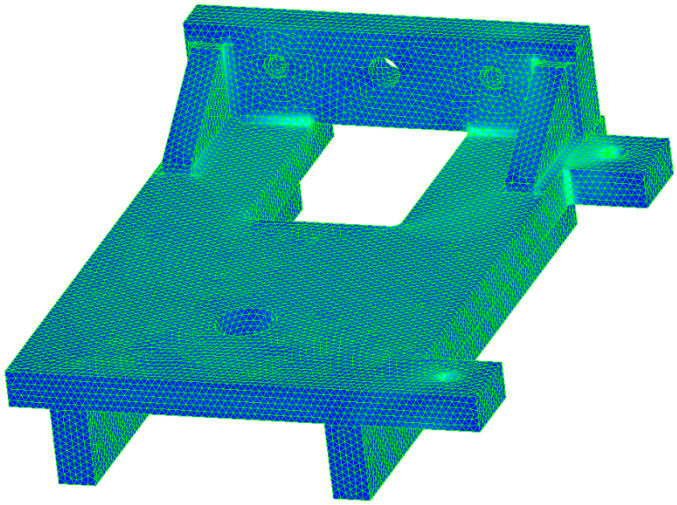

Mesh shown. Mesh size: 0.35''

C. Stresses

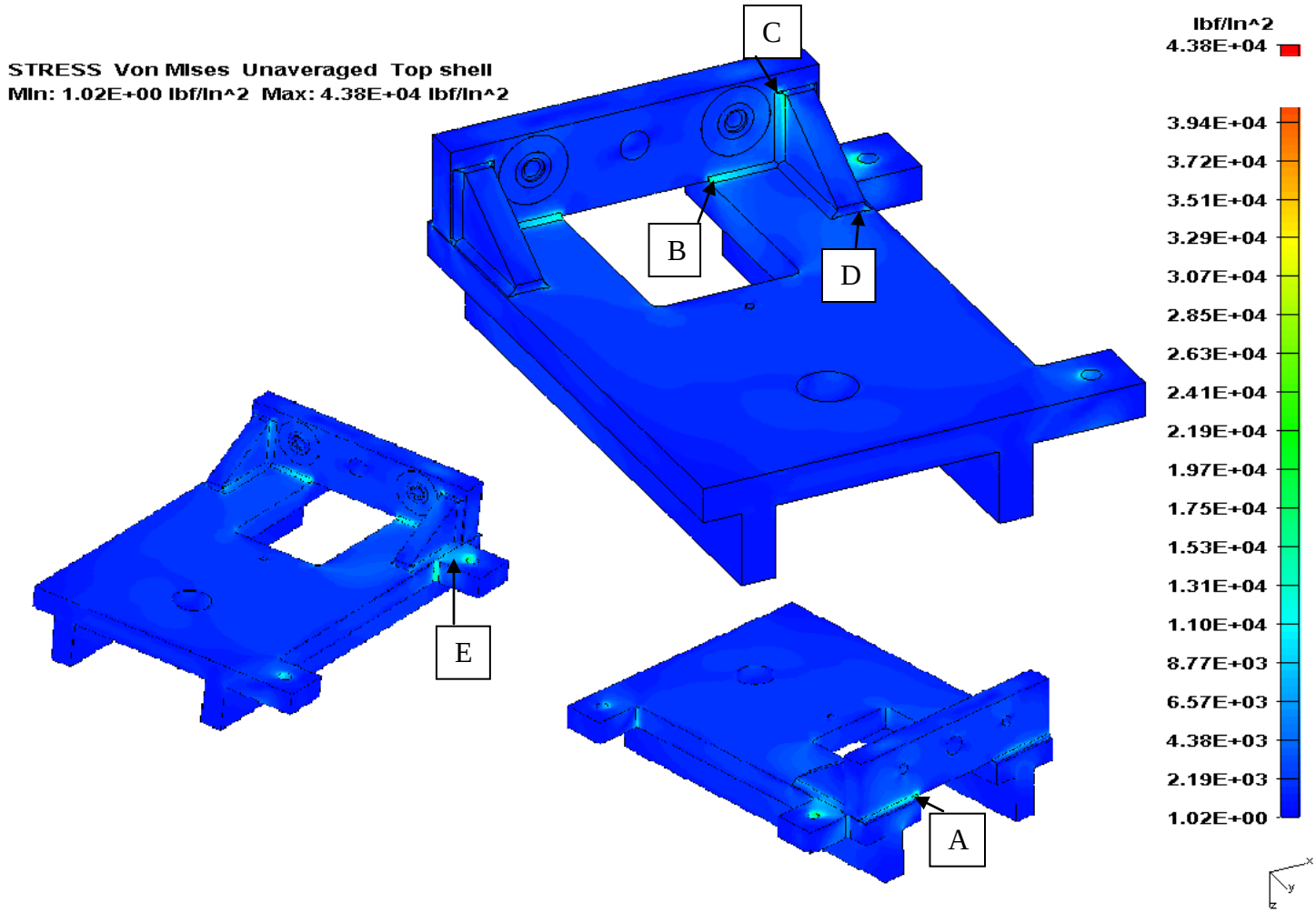

Points of interest defined:

A: Back load plate weld (sec. 2)

B: Front load plate weld (sec. 3)

C. Top gusset weld (sec. 4)

D. Front gusset weld (sec. 5)

E. Attachment lip (sec. 6)

The stress views explained:

Contour view: The unaveraged contour view shows stresses of each element partially blended into each other and is semi-realistic. The averaged contour view shows stress of each element blended together, and blended within each element. This view usually gives the most realistic results.

Elemental view: The elemental view shows the stresses computed for each individual element in the mesh. Maximum stresses and average stresses within the element are shown. This view is useful in illustrating where the stresses are resulting from, and in comparison with the contour views to illustrate the true concentrations of the stresses.

1. Reaction Forces

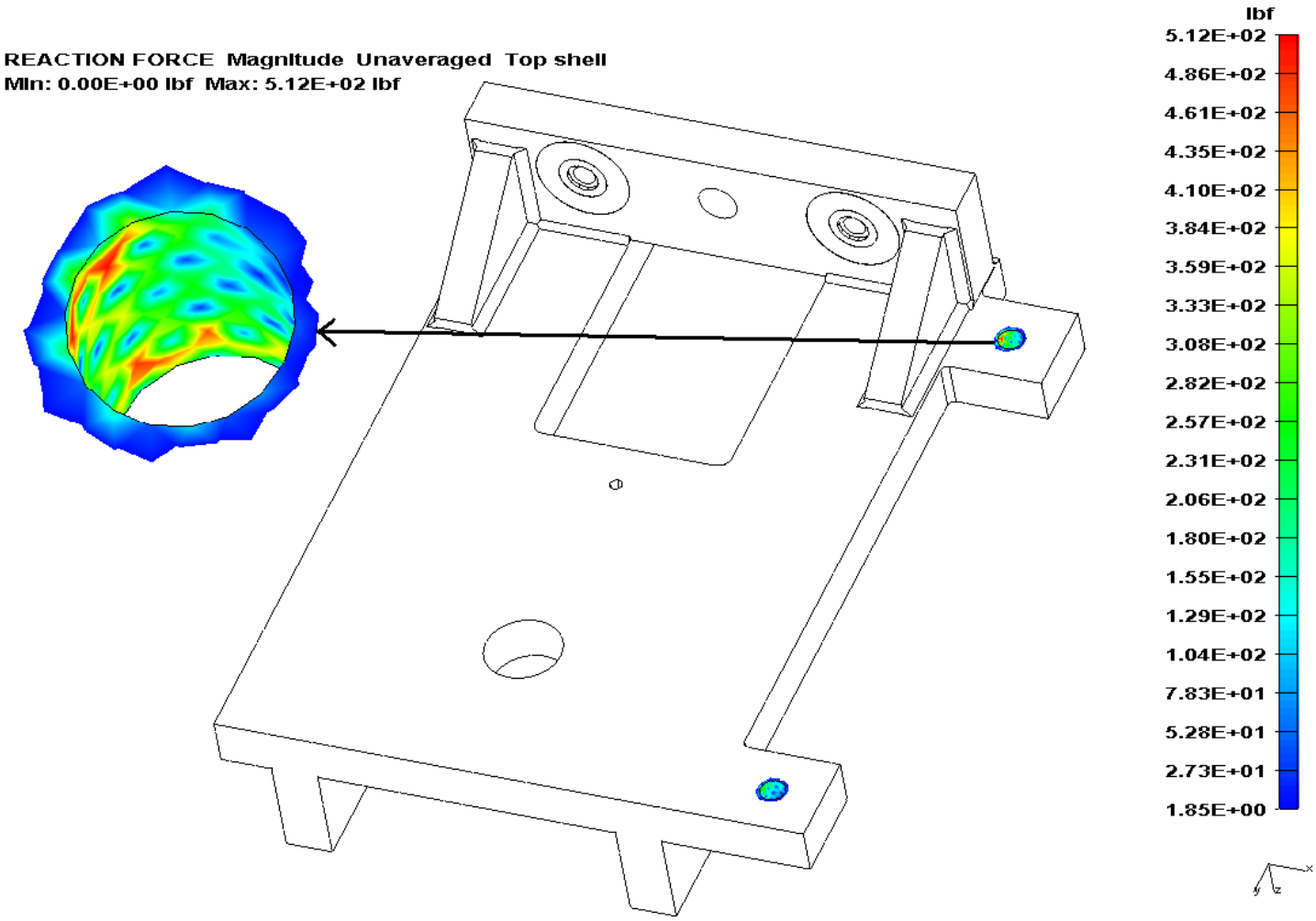

The reaction forces shown are relatively low, with a localized maximum of 512 lbs.

2. Back load plate weld (point of interest A)

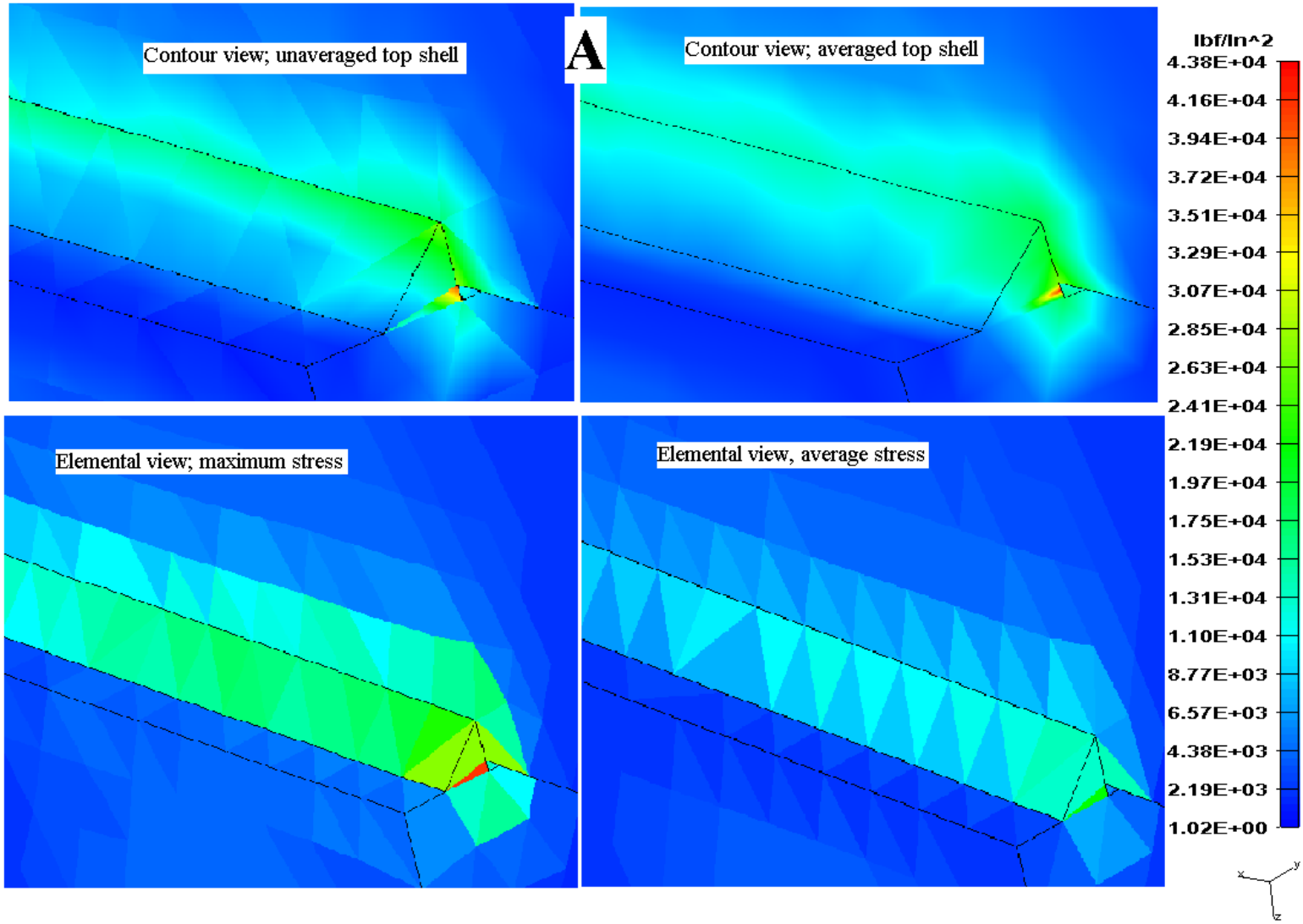

***Note for the averaged contour view, the color bar must be scaled down, with a max stress (red) of 39 ksi, yellow at 27-30 ksi, green at 17-27 ksi, and teal at 16-8 ksi.**

Point of interest A (back load plate weld) is shown in four different views. In the averaged contour view, the geometry of the gaps left to concentrate stresses on welds causes an unrealistic stress pocket, which would not exist without the gap. The 40 ksi + stresses only exist in a tiny pocket within the gap element, and it can be seen from the average elemental view that the *average* stress within this element is relatively lower (22 ksi) than the max. Going back to the averaged contour view with this in mind, it can be seen most of the weld has stresses under 13 ksi, with a small realistic concentration of about 21 ksi in the corner. The average elemental view illustrates that the average stress in each element including the non-gap corner element are under 17 ksi, and the maximum stress elemental view illustrates that even the maximum stress within most elements is under 21 ksi

3. Front load plate weld (point of interest B)

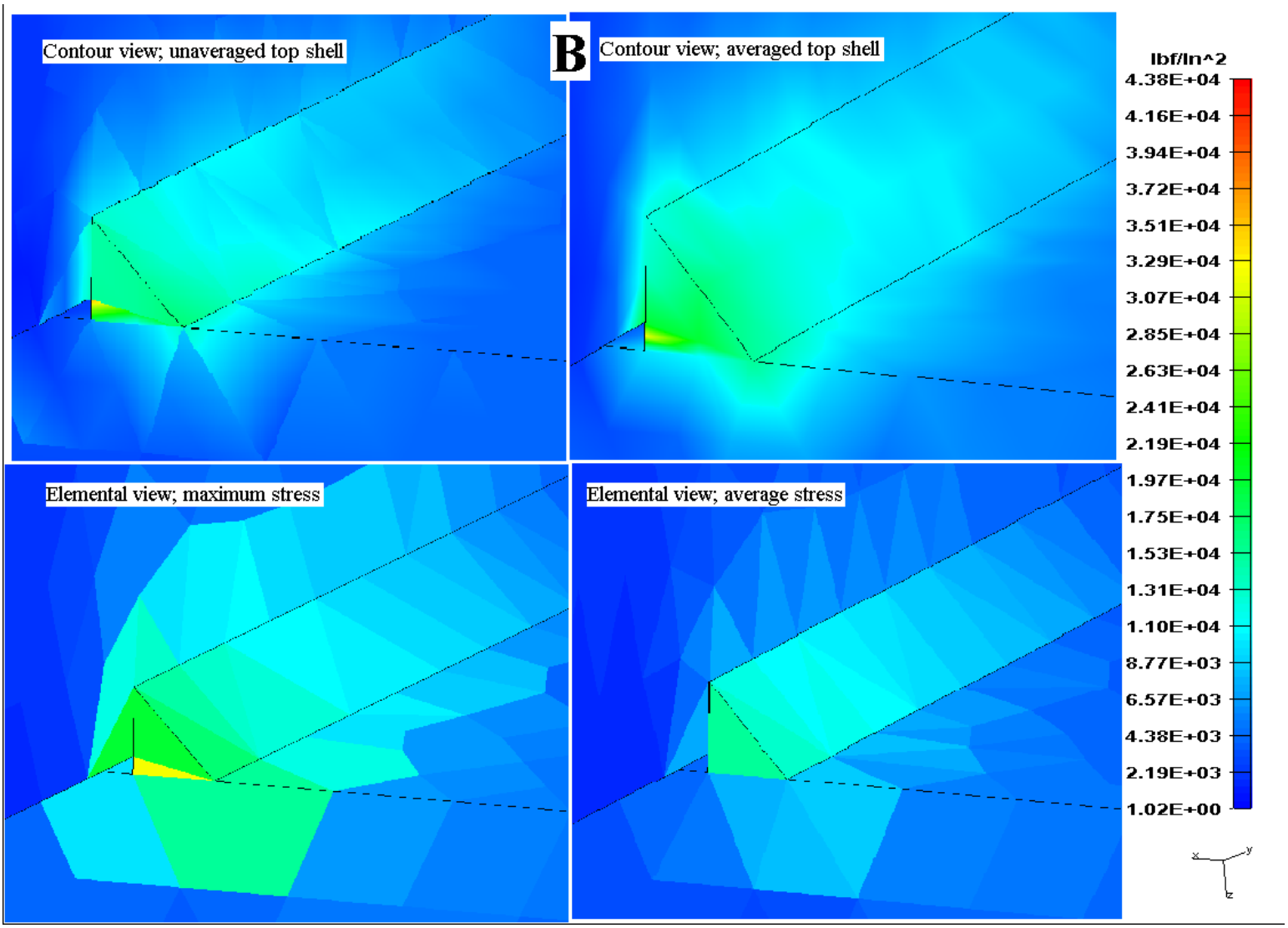

***Note for the averaged contour view, the color bar must be scaled down, with a max stress (red) of 39 ksi, yellow at 27-30 ksi, green at 17-27 ksi, and teal at 16-8 ksi.**

Point of interest B (front load plate weld) is shown in four different views. In the averaged contour view, the geometry of the gaps left to concentrate stresses on welds causes an unrealistic stress pocket, which would not exist without the gap. The 32 ksi + stresses only exist in a tiny pocket within the gap element, and it can be seen from the average elemental view that the *average* stress within this element is relatively lower (< 20 ksi) than the max. Going back to the averaged contour view with this in mind, it can be seen most of the weld has stresses under 15 ksi, with a small realistic concentration of about 19 ksi in the corner. The average elemental view illustrates that the average stress in each element including the non-gap corner element are under 15 ksi, and the maximum stress elemental view illustrates that even the maximum stress within most elements is under 17 ksi.

4. Top gusset weld (point of interest C)

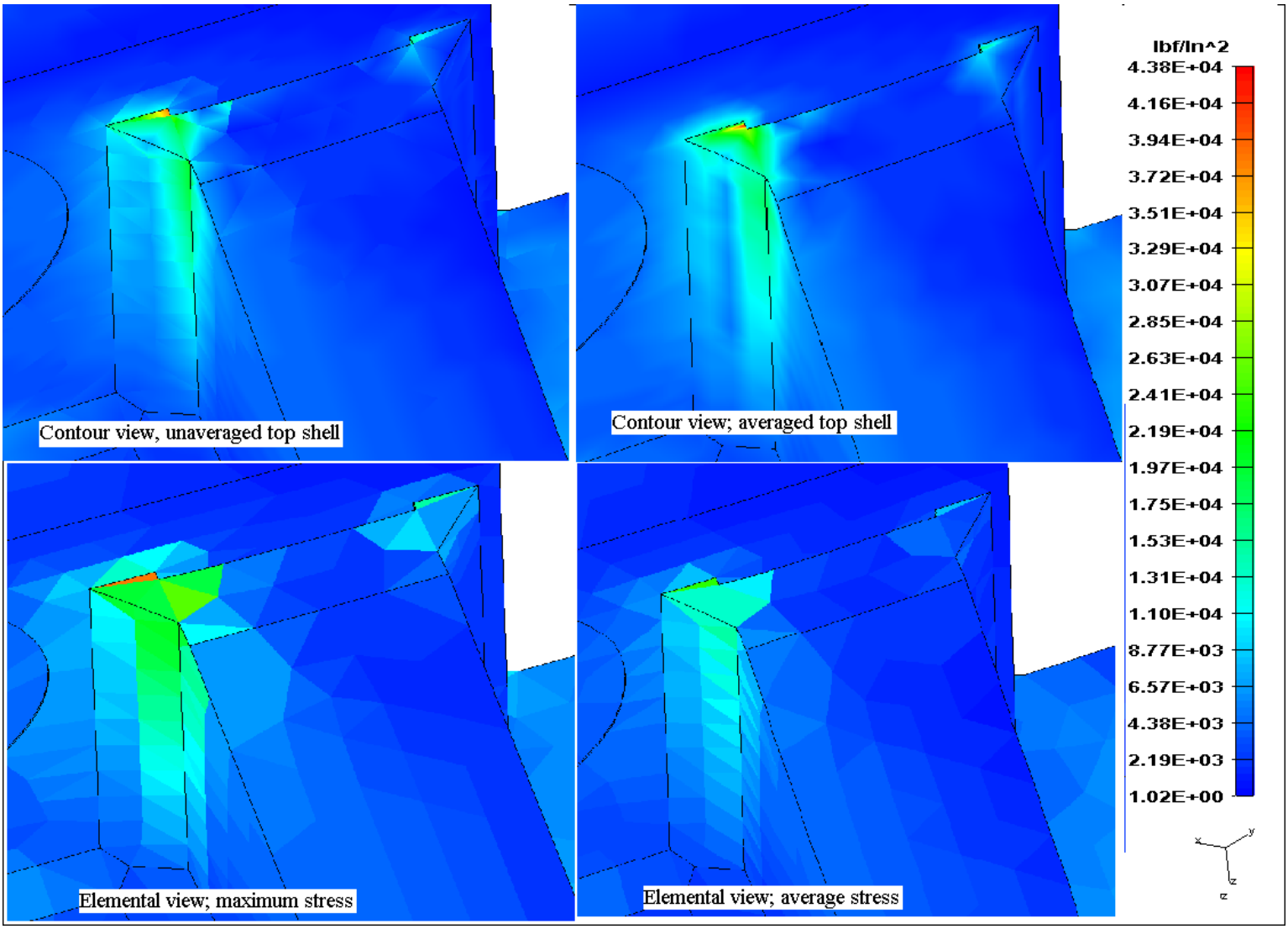

***Note for the averaged contour view, the color bar must be scaled down, with a max stress (red) of 39 ksi, yellow at 27-30 ksi, green at 17-27 ksi, and teal at 16-8 ksi.**

Point of interest C (top gusset weld) is shown in four different views. In the averaged contour view, the geometry of the gaps left to concentrate stresses on welds causes an unrealistic stress pocket, which would not exist without the gap. The 40 ksi + stresses only exist in a tiny pocket within the gap element, and it can be seen from the average elemental view that the *average* stress within this element is relatively lower (< 17 ksi) than the max. Going back to the averaged contour view with this in mind, it can be seen most of the weld has stresses under 20 ksi, with a small realistic concentration of about 22 ksi in the corner. The average elemental view illustrates that the average stress in each element including the non-gap corner element are under 15 ksi, and the maximum stress elemental view illustrates that even the maximum stress within most elements is under 20 ksi.

5. Front gusset weld (point of interest D)

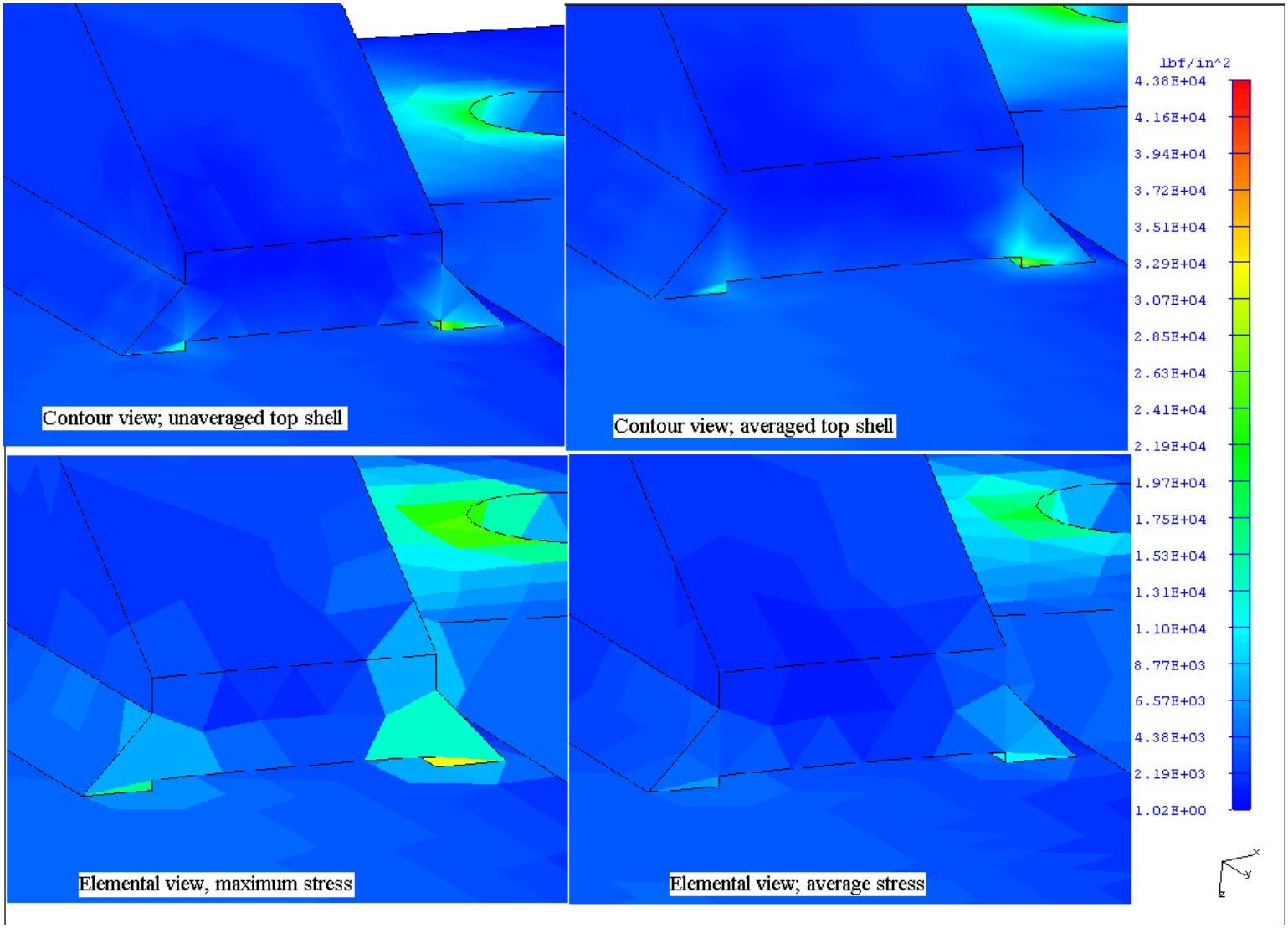

***Note for the averaged contour view, the color bar must be scaled down, with a max stress (red) of 39 ksi, yellow at 27-30 ksi, green at 17-27 ksi, and teal at 16-8 ksi.**

Point of interest D (front gusset weld) is shown in four different views. In the averaged contour view, the geometry of the gaps left to concentrate stresses on welds causes an unrealistic stress pocket, which would not exist without the gap. The 35 ksi + stresses only exist in a tiny pocket within the gap element, and it can be seen from the average elemental view that the *average* stress within this element is relatively lower (< 13 ksi) than the max. Going back to the averaged contour view with this in mind, it can be seen most of the weld has stresses under 16 ksi, with a small realistic concentration of about 20 ksi in the corner. The average elemental view illustrates that the average stress in each element including the non-gap corner element are under 13 ksi, and the maximum stress elemental view illustrates that even the maximum stress within most elements is under 16 ksi.

6. Attachment lip (point of interest E)

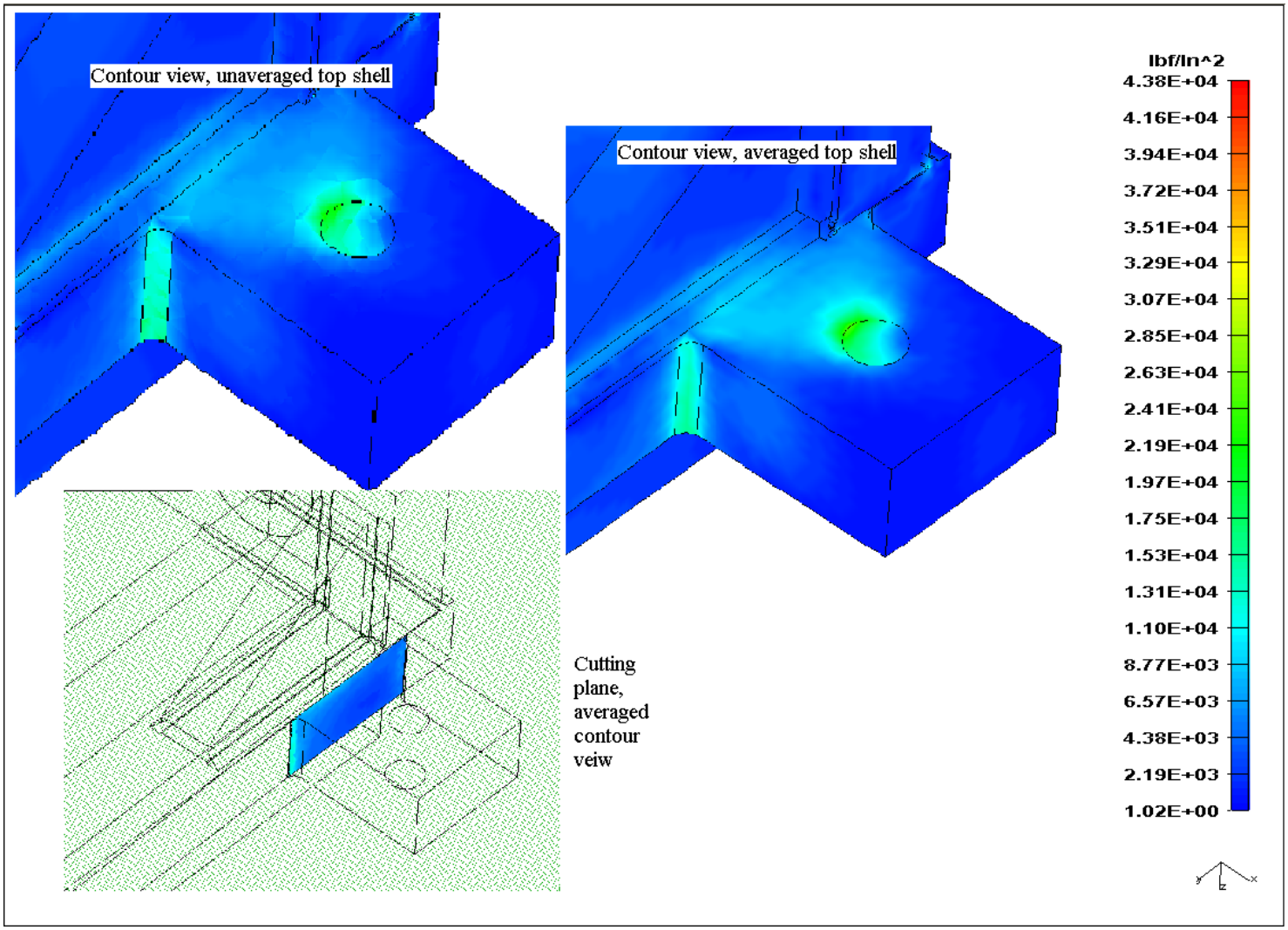

***Note for the averaged contour view, the color bar must be scaled down, with a max stress (red) of 39 ksi, yellow at 27-30 ksi, green at 17-27 ksi, and teal at 16-8 ksi.**

Stresses shown at point of interest E (attachment lip). It can be seen that the attachment stresses are all relatively low (< 15 ksi) in most places, with a small higher (< 25 ksi) concentration around the hole. The cutting plane illustrates the stresses are contained to the surface for the most part.

7. Comparison to the “no weld” model

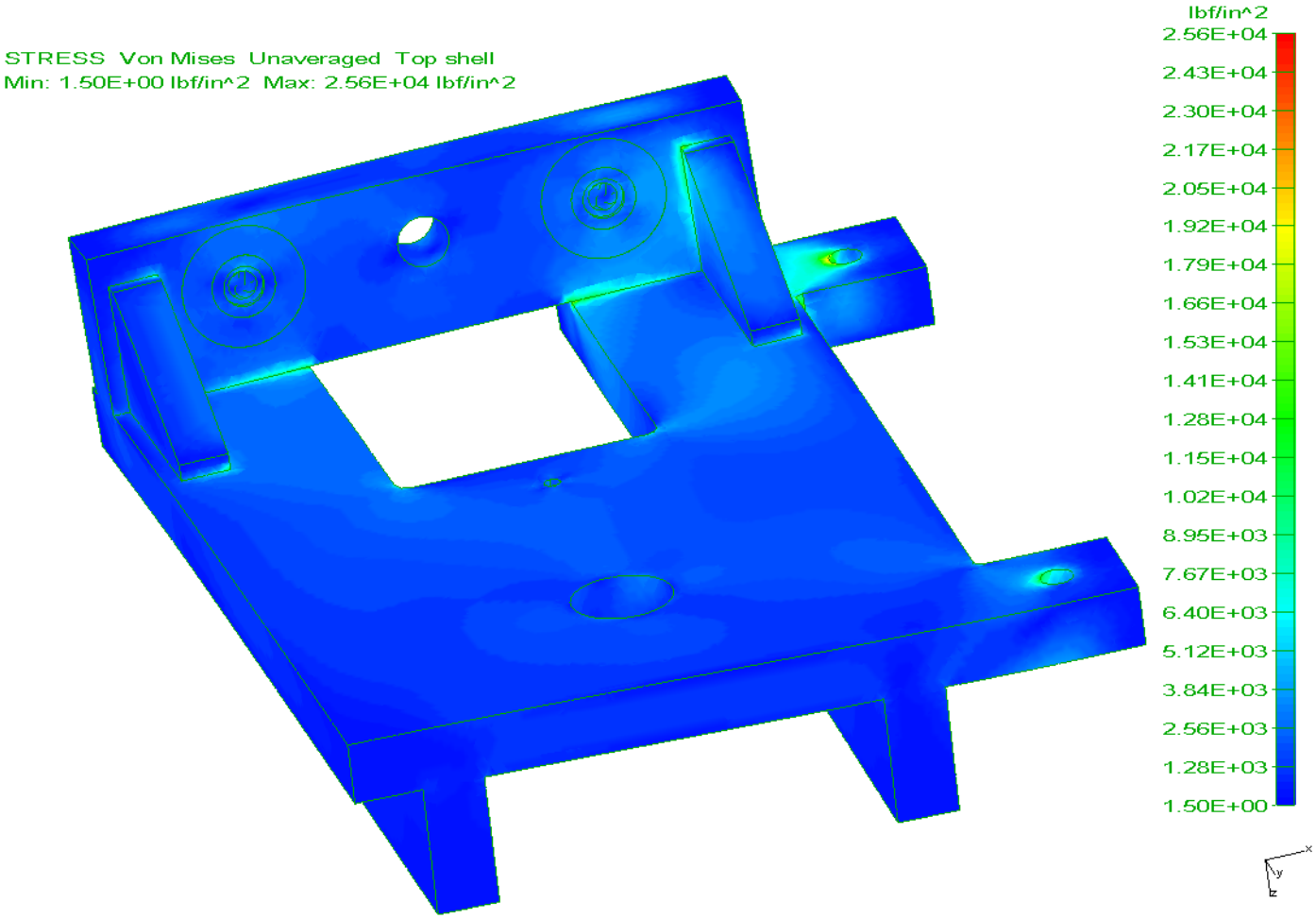

Full view of the “no welds” model. Notice the maximum stress is down to 25.6 ksi without the small weld gaps creating unreasonable stress consentrations.

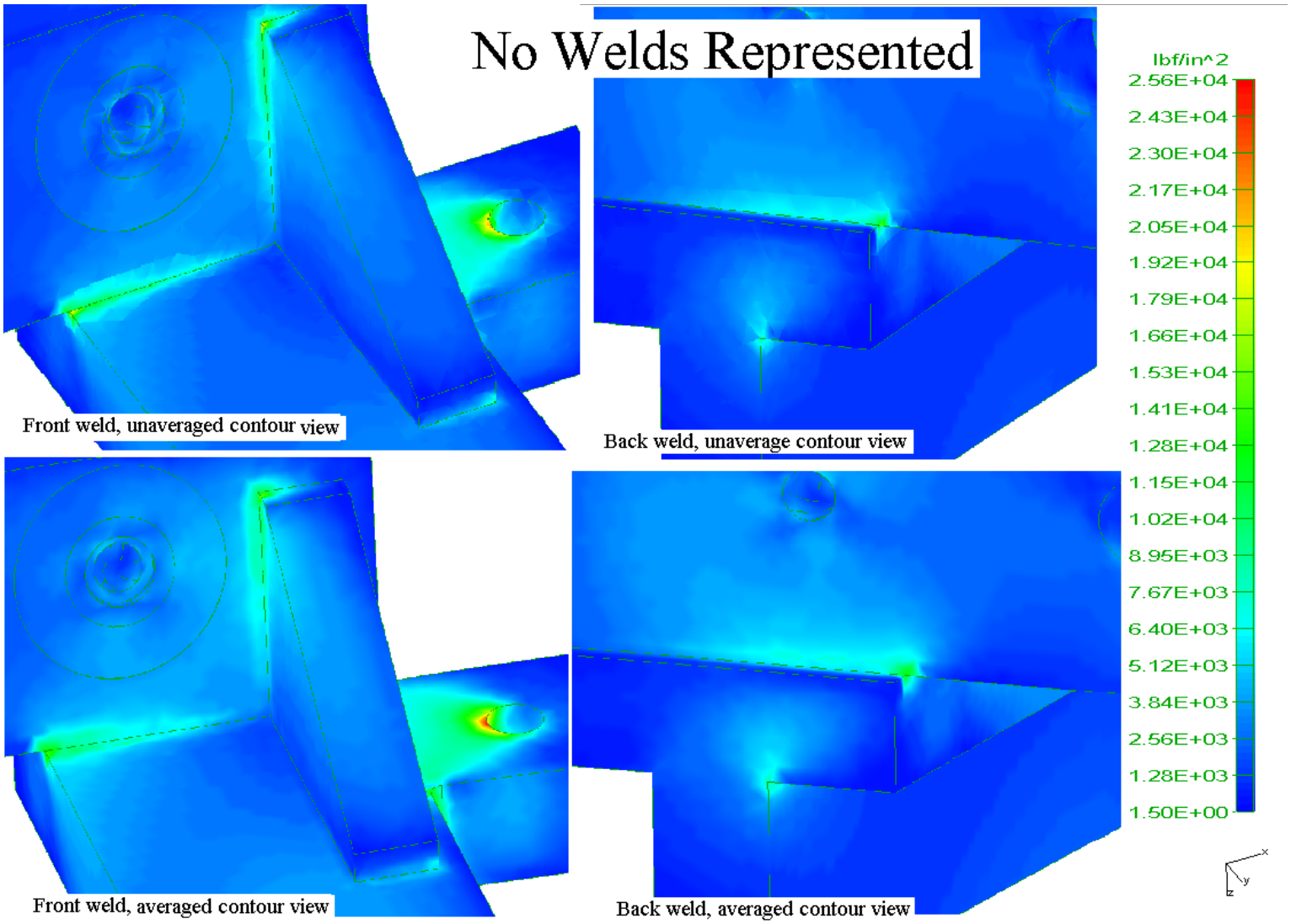

The front load plate weld and gusset welds can be seen on the left, with main stresses less to 10 ksi, and concentrations still less than 20 ksi. The same can be said for the back weld shown on the right. With this "no welds" model, which may be considered a viable FEA solution, it is apparent that the vast majority of stresses are less than 15 ksi, with real concentrations still under 20 ksi. It is also apparent that the models agree with each other fairly well once the stress concentrations caused by the weld gaps are neglected.

D. Deformation

1. Weld model

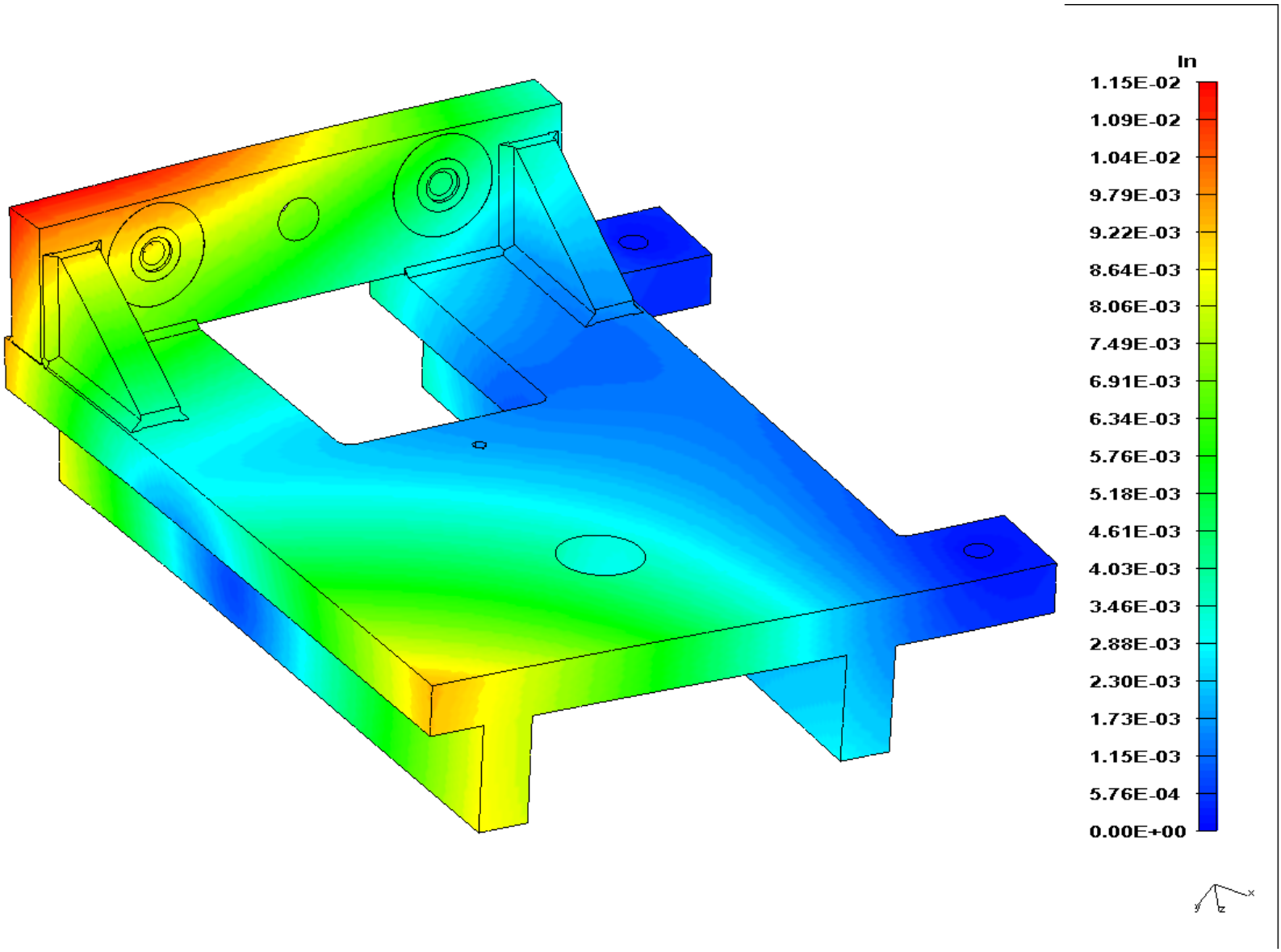

In the model which represents welds, the deformation is shown above by color. It can be seen the maximum is at the top left corner, at 0.0115''. Deformations at this point and every other are low.

2. No welds model

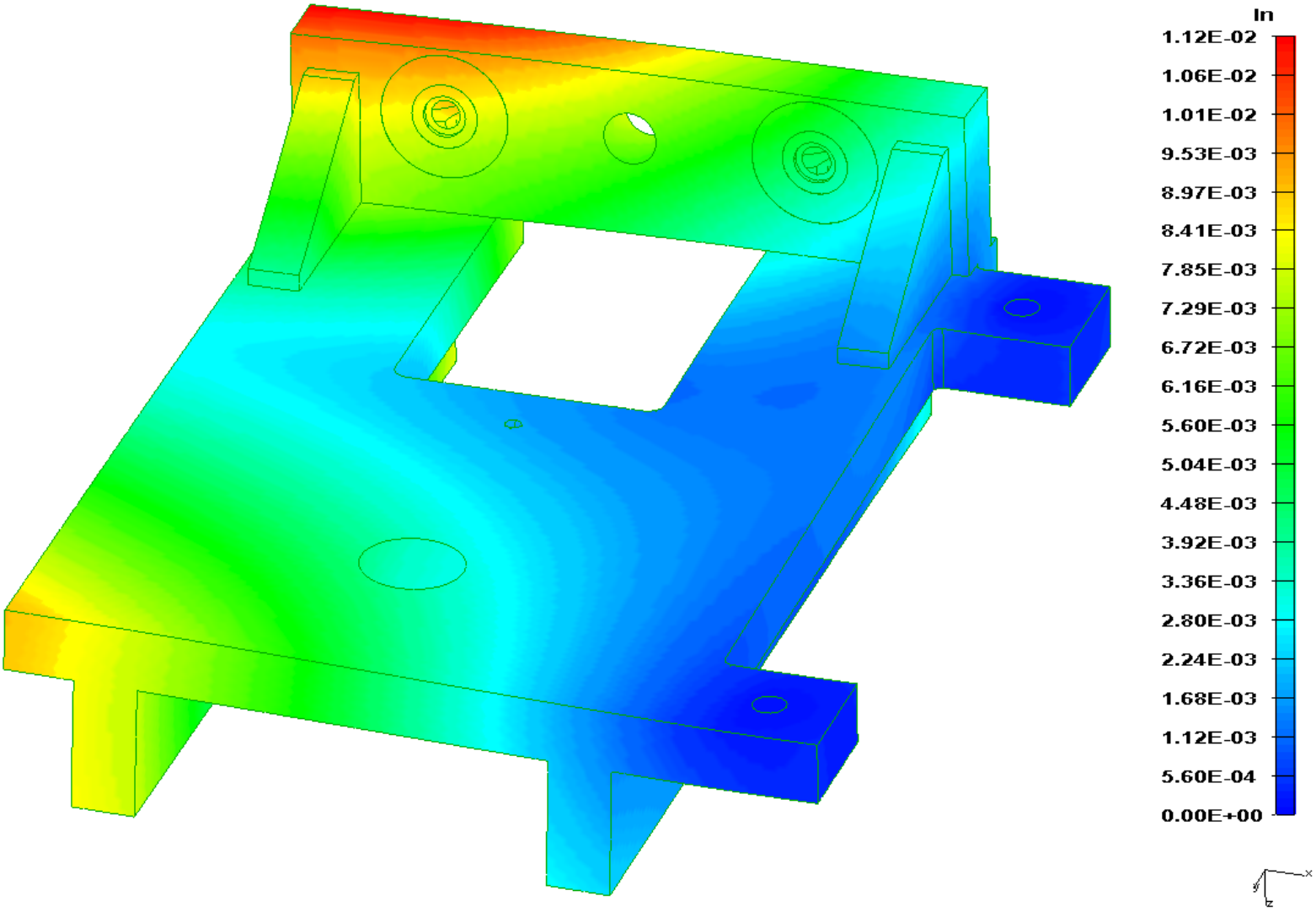

In the model which does not represent welds, it can be seen the maximum deformation is still at the upper left corner, slightly lower at 0.0112’’. This deformation and all others are very low, and both models are in good agreement with each other.

V. Summary

With the analysis of the two models it is clear that the deformation of the load plate and all other components of the Hilman guides are small and insignificant, with the models agreeing on a maximum of about 0.0115 inches.

The stress analysis of the two models are also in general agreement with each other once the unreasonable stress concentration caused by the welds gaps are neglected. Leaving these weld gaps gives a more realistic stress on the weld, with the exception of the meshed element closest to the gap. With this particular element being ignored or even averaged, the results between models are very close. By using the second "no welds" model as a comparison, it can be seen that without the weld gaps, these concentrations would not exist.

It is apparent from the analysis that the two most critical points for stress build up are the back load plate weld (poi A), and the top gusset weld (poi C). However when looking at poi A, the most realistic view (averaged contour view) of the weld model suggests an average stress of less than 14 ksi and corner concentrations up to about 20 ksi, with the most realistic view of the "no weld" model suggesting the average stresses are as low as 10 ksi and corner concentrations as low as 15 ksi. When looking at the top gusset weld on the most realistic view, it suggests an average stress of about 12 ksi with a large corner concentration as high as 21 ksi. However, when considering the "no weld" model it suggests the stresses are much lower at an average of about 10 ksi and a small corner concentration of about 17 ksi. I believe the "no welds" model can be presumed more accurate at this weld location, as the weld gap left is perpendicular to the force which is likely causing more unnecessary stress to be shown at this joint.