Fermi National Accelerator Laboratory
Particle Physics Division

Mechanical Department Engineering Note

Number: *MD-ENG-307* **Date:** *19 Jan 2011*

Project: *DES*

Project Internal Reference: *DES Docdb 4741*

Title: ***The Support Cradle For DES Imager Shipment From FNAL To CTIO***

Author(s): *Greg Derylo* *FNAL/PPD/MD*

Reviewer(s):

Key Words: *DES*

Abstract/Summary:

A support frame has been designed to hold the completed imager within its shipping crate for transport from FNAL to the Blanco telescope at CTIO. It is to be fabricated from Maytec aluminum framing system members along with adapter plates for mounting of the imager and fastening to the vibration-isolated floor of the shipping crate. Calculations performed for the framing members and fastener sizing indicates adequate sizing for the anticipated shipping loads.

Applicable Codes: *N/A*

INTRODUCTION

The DES imager is being built at FNAL and is to be shipped to the CTIO observatory in Chile. A shipping container with built-in vibration isolation features is to be procured for this transport (the specification for that crate can be found in DES docdb 4741). A support cradle is to be constructed in such a way that it holds the vessel on its side (the same way it is oriented when mounted on its handling cart) and can be rigidly mounted to the vibration-isolated deck of the shipping container.

The support cradle being developed is shown in FNAL drawing 4900.003-ME-480506 (copy attached below) and consists of extruded aluminum framing parts and aluminum mounting plates. The footing plates that transition between the framing and the deck of the shipping crate are to be made from G10 for electrical isolation reasons.

To load the imager, the rear support post is first be mounted onto the rear cover of the vessel while it is still on its handling cart. It is then tranferred by crane to the support cradle, where the vessel's blank front cover is bolted to the front plate of the cradle and the post is fastened to its mating plate. It is not known at this time if the cradle will already be mounted to the deck of the shipping crate or if it will be tranferred there after the imager is installed.

During shipping, the maximum allowable G load specified for the imager is 2 G's (per the shipping crate specification mentioned above). The load capacity of the frame is investigated below relative to a load equal to four times the imager's static weight for added conservatism. These calculations verify the frame's ability to support the load.

In addition, the plate that bolts to the imager's back cover and center's the hoist ring between readout crates is analyzed to verify its design.

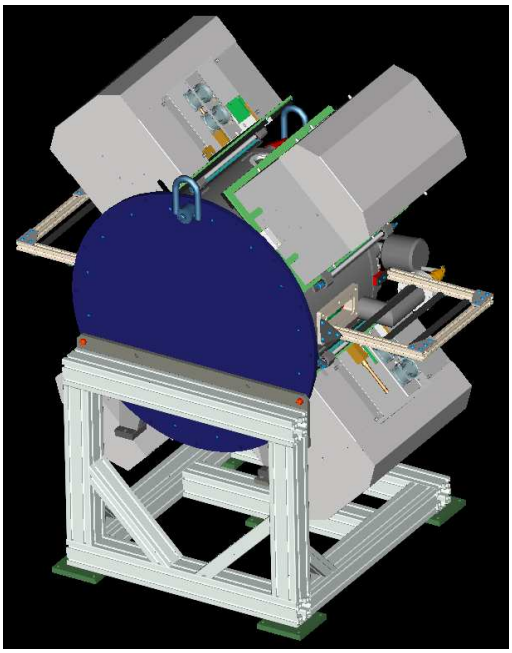

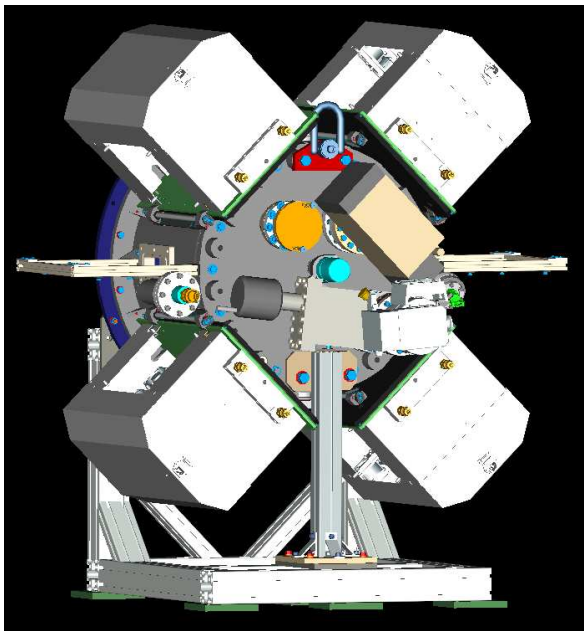

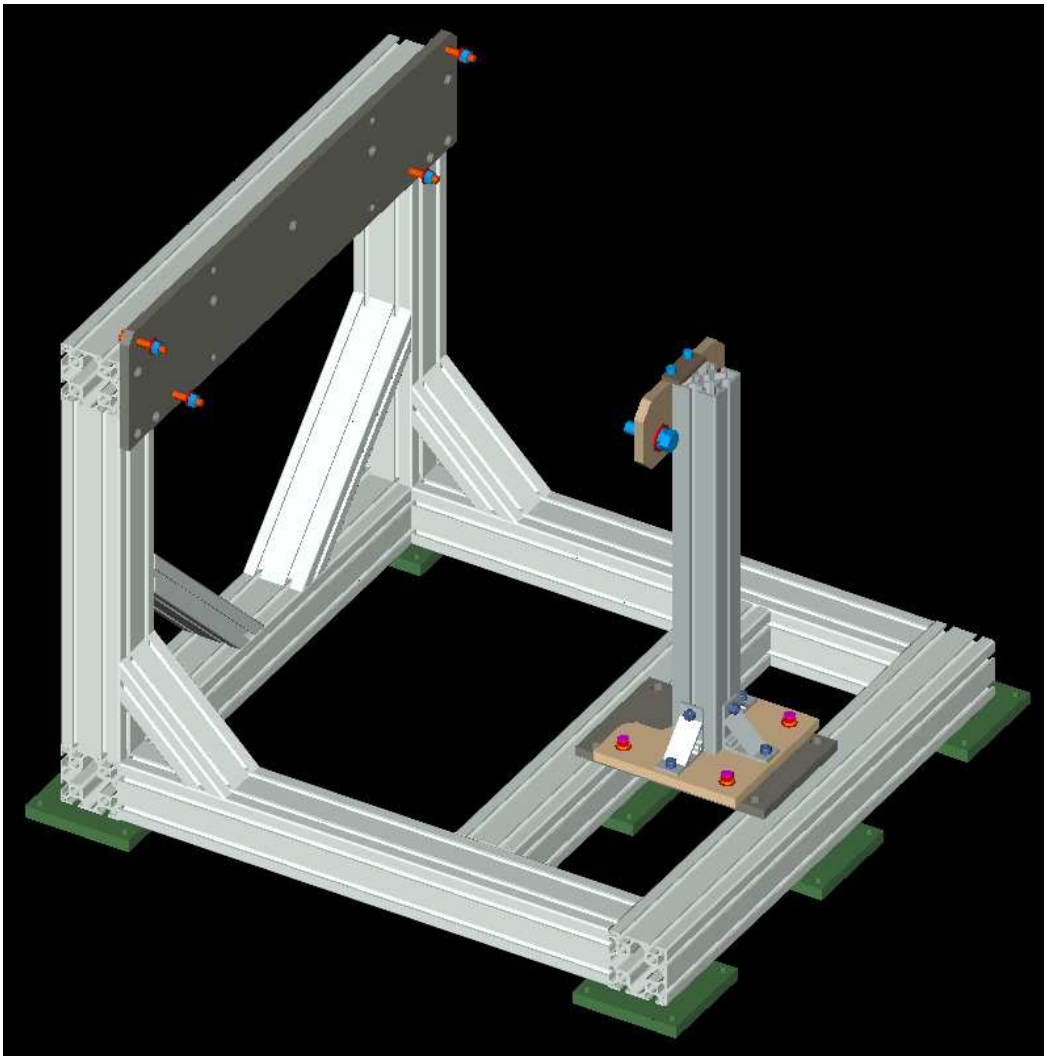

IMAGER WEIGHT

The estimated weight is calculated using the imager weight spreadsheet, adjusting for equipment that will be removed for transport (e.g.; the front window mounting flange and the LN2 system). An annotated copy of the spreadsheet is attached below. The estimated center of gravity of the entire assembly is shown in drawing 480506 (attached).

Total static weight: $W_static := 1293 - 115$ pounds (not including support frame)

Total dynamic weight: $g_dyn := 4$ (Max specification is 2, but additional conservatism is applied here)

$W_dyn := g_dyn \cdot W_static$

$W_dyn = 4.712 \times 10^{3}$ pounds

DATA FROM MAYTEC CATALOG DATA:

Assumed aluminum density (lb/in^3): $rho_Al := 0.1$

Frame Modulus (catalog p65): E = 70 GPa but use Ref 2 values defined below

Frame Yield Stength (catalog p65): Y = 0.2 GPa but use Ref 2 values defined below

80 x 80 mm Extrusion width (in): $width_1 := \frac{80}{25.4}$

Frame Moment (in^4, catalog p24): $I_1 := 166 \cdot 0.3937^4$

Frame weight (lb/in, catalog p24): $G_1 := 5.9 \cdot \frac{2.205}{39.37}$

X-section (in^2): $XS_1 := \frac{G_1}{rho_Al}$

60 x 60 mm Extrusion width (in): $width_2 := \frac{60}{25.4}$

Frame Moment (in^4, catalog p32): $I_2 := 56 \cdot 0.3937^4$

Frame weight (lb/in, catalog p32): $G_2 := 4.2 \cdot \frac{2.205}{39.37}$

X-section (in^2): $XS_2 := \frac{G_2}{rho_Al}$

Maytec extrusion connectors

Load ratings from pg 131 of the Maytec catalog for base 40mm E-slot extrusions for universal-type connectors.

Tension:	12 kN (2700 lbf) per connector (group of 4 used in 80x80 extrusions)
Slide:	24 kN (5400 lbf) per group of 4 connectors
Flexture:	2000 Nm (1475 ft-lbf) per group of 4 connectors

Allowable Stress in the Aluminum

Maytec is a German company and its catalog identifies the extrusion as "Auminum alloy Al Mg Si 0.5 F25". Per Ref 2 Part IV Table 2, this corresponds to alloy 6063. Ref 2 Part 1 Table A.3.4M lists the following properties for 6063-T6. These values are consistent with the Ref 1 catalog values reported above.

Tensile Strength (ultimate): $F_tu := \frac{\left(0.205 \cdot 10^9\right)}{6895}$ $F_tu = 2.973 \times 10^4$ psi

Tensile Strength (yield): $F_ty := \frac{(0.170\,10^9)}{6895}$ $F_ty = 2.466 \times 10^4$ psi

Compressive Stength (yield): $F_cy := F_ty$

Shear Strength (ultimate): $F_su := \frac{(.130\,10^9)}{6895}$ $F_su = 1.885 \times 10^4$ psi

Elastic Modulus: $E := \frac{(69.6\,10^9)}{6895}$ $E = 1.009 \times 10^7$ psi

FASTENER LIMITS

* Tensile and shear limits are calculated below for several screw sizes
    - Assume preloaded to 80% of tensile strength
    - Assume shear strength = 60% of tensile strength
* Screw type data:
    - 3/8-24 grade 8: XS = .0878 sqin TS = 150 ksi "_38"
    - 3/8-16 grade 5: XS = .0775 sqin TS = 120 ksi "_35"
    - 5/8-11 grade 5: XS = .226 sqin TS = 120 ksi "_55"
    - M8 class 12.9: XS = .057 sqin TS = 174 ksi "_m8"
* Maytec T-nuts limits (est. based on catalog pg 131 Maytec universal connector data):
    - Tensile = 12 kN (2700 lbf)
    - Slide load = 6 kN (1350 lbf)

$Bolt_T_38 := .2 \cdot .0878 \cdot 150000$ $Bolt_T_38 = 2.634 \times 10^3$ pounds

$Bolt_T_35 := .2 \cdot .0775 \cdot 120000$ $Bolt_T_35 = 1.86 \times 10^3$ pounds

$Bolt_T_55 := .2 \cdot .226 \cdot 120000$ $Bolt_T_55 = 5.424 \times 10^3$ pounds

$Bolt_T_m8 := .2 \cdot .057 \cdot 174000$ $Bolt_T_m8 = 1.984 \times 10^3$ pounds

$Bolt_S_38 := .6 \cdot .0878 \cdot 150000$ $Bolt_S_38 = 7.902 \times 10^3$ pounds

$Bolt_S_35 := .6 \cdot .0775 \cdot 120000$ $Bolt_S_35 = 5.58 \times 10^3$ pounds

$Bolt_S_55 := .6 \cdot .226 \cdot 120000$ $Bolt_S_55 = 1.627 \times 10^4$ pounds

$Bolt_S_m8 := .6 \cdot .057 \cdot 174000$ $Bolt_S_m8 = 5.951 \times 10^3$ pounds

LOAD CASE 1: VERTICAL DOWNWARD

It is most conservative (and most simple!) to assume that the smallest leg (the rear one) supports 100% of the weight of the imager. This applies a compressive axial load on this member that has a full length of 19.6in. Member buckling is addressed in Ref 2 Part 1 Section E.3 as follows. Since the load on the small rear leg is acceptable, the larger front legs are not analyzed.

Radius of gyration: $r := \left(\frac{I_2}{XS_2}\right)^{0.5}$ $\quad r = 0.756$ inches

k L / r : $1 \cdot \frac{19.6}{r} = 25.917$ Note k=1 per Section C.3

$\kappa := 1000$ psi per Table B.4.2

$B_c := F_cy \cdot \left[1 + \left(\frac{F_cy}{2500 \cdot \kappa}\right)^{0.5}\right]$ per Table B.4.2

$D_c := \left(\frac{B_c}{10}\right) \cdot \left(\frac{B_c}{E}\right)^{0.5}$ per Table B.4.2

$C_c := 0.41 \cdot \left(\frac{B_c}{D_c}\right)$ per Table B.4.2

$S_2 := C_c \quad S_2 = 79.123$ per E.3-4

Since kL/r is less than S_2, E.3-2 applies as follows:

$F_c := 0.85 \cdot \left[B_c - D_c \cdot \left(1 \cdot \frac{19.6}{r}\right)\right] \quad F_c = 1.994 \times 10^4$ psi

FOS = $\frac{F_c}{\left(\frac{W_dyn}{XS_2}\right)} = 9.957$

Investigation of mounting plate bolts in shear:

Imager to mount plate bolts = four 3/8 Grade 8 + two 5/8 Grade 5

FOS = $\frac{(4 \cdot Bolt_S_38 + 2 \cdot Bolt_S_55)}{W_dyn} = 13.615$

Mount plate to frame bolts = 9 front + 4 rear M8 class 12.9 bolts

FOS = $\frac{[(9 + 4) \cdot Bolt_S_m8]}{W_dyn} = 16.418$

Estimated resistance to sliding of the T-nuts in the rear post (ignoring the benefit of the stop plate an the top of the post) = 4 * 1350 = 5400 lbf. This is comparable to the entire dynamic load, but this joint shares only a portion of the total weight.

LOAD CASE 2: VERTICAL UPWARDS

In terms of framing loads, the small rear post is analyzed to demonstrate that it can withstand 100% of the load. The larger front legs are therefore not explicityly investigated.

Tensile yield capacity of rear post using Ref 2 Part 1 D.2-1:

$P_n := F_ty \cdot XS_2$ FOS = $\frac{P_n}{W_dyn} = 12.308$

Investigation of mounting plate bolts in shear -- Results are the same as those found for Load Case 1 above.

Insvestigation of additional framing connections:

Front post framing connectors -- two posts with 4 connectors at each end

FOS = $\frac{(2 \cdot 4 \cdot 2700)}{W_dyn} = 4.584$ (assumes no load sharing with rear post)

Rear post connections:

A) Four M8 bolts in tension at the post's base:

FOS = $\frac{(4 \cdot Bolt_T_m8)}{W_dyn} = 1.684$ (assumes no load sharing with front posts)

B1) One M8 bolt in tension & 3 T-nuts providing sliding resistance

FOS = $\frac{(Bolt_T_m8 + 3 \cdot 5400)}{W_dyn} = 3.859$ (assumes no load sharing with front posts)

B2) One M8 bolt in tension & 3 M8's in shear

FOS = $\frac{(Bolt_T_m8 + 3 \cdot Bolt_S_m8)}{W_dyn} = 4.21$ (assumes no load sharing with front posts)

C) Three 3/8 Grade 5 bolts holding the two plates together

FOS = $\frac{(3 \cdot Bolt_T_35)}{W_dyn} = 1.184$ (assumes no load sharing with front posts)

Investigation of foot plate bolts:

Four M8 bolts per foot plate assuming they evenly share the load:

FOS = $\frac{[(6 \cdot 4) \cdot Bolt_T_m8]}{W_dyn} = 10.103$

Shear in the G10 foot plates (Thickness = 5/8" - 0.35" (counterbore) = 0.28") under the

M8 SHCS heads (13mm diameter), where the shear strength of G10 is assumed to be 22ksi (Ref 3):

$$\tau := \frac{W_dyn}{(6\cdot 4)\cdot\left(\pi\cdot\frac{13}{25.4}\cdot 0.28\right)}$$

$$\text{FOS} = \frac{22000}{\tau} = 50.448$$

Taking credit for only 2 out of 4 bolts connecting the foot plates to the crate base (Grade 5 3/8" bolts assumed):

$$\text{FOS} = \frac{[(6\cdot 2)\cdot Bolt_T_35]}{W_dyn} = 4.737$$

LOAD CASE 3: IMAGER AXIAL DIRECTION (FORWARD OR REVERSE)

Bending of the two front and one rear vertical posts

When loaded from the side, the three vertical posts share the total load. The following assumptions are made:

a. For simplicity, the 45deg support braces that reduce the effective post length are ignored for this analysis
b. Load sharing: P_total = 2*P_front + P_rear
c. The tops of the posts all move by the same amount since they are all attached to the same weldment (y_front = y_rear)
d. Post deflection is in the form of one end fixed / one end guided (Roark & Young Table 8.1 case 1b) with the following relationships:

Moment: M_i = 0.5 * P_i * L_i
Deflection: y_i = (P_i * L_i^3) / (12 * E * I_i)

Setting the front & rear deflections equal results in the following:

P_rear = P_front * (L_front / L_rear)^3 * (I_rear / I_front)
= P_front * (480/499)^3 * (56/166)
= P_front * 0.30

Therefore P_total = 2.3 * P_front (from assumption 'b' above), resulting in

P_front = 0.435 * P_total and P_rear = 0.130 * P_total

The moment and stress loads are then calculated as shown below:

$$M_front := 0.5\cdot(0.435\cdot W_dyn)\cdot\left(\frac{480}{25.4}\right)$$

$$M_rear := 0.5\cdot(0.130\cdot W_dyn)\cdot\left(\frac{499}{25.4}\right)$$

$$\sigma_front := \frac{\left(M_front\cdot\frac{width_1}{2}\right)}{I_1} \qquad \sigma_front = 7.648\times 10^{3} \quad \text{psi}$$

$$\sigma_rear := \frac{\left(M_rear\cdot\frac{width_2}{2}\right)}{I_2} \qquad \sigma_rear = 5.282\times 10^{3} \quad \text{psi}$$

The allowable stress of 15ksi is found from Ref 4 Table 3.3.29 (Allowable stresses for 6063-T6). First, a check of the slenderness limit to verify that S1 = (Lb * Sc / Iy) < 145.

Front post slenderness: S1 = $\frac{\left[\left(\frac{480}{25.4}\right)\cdot\left[\left(\frac{1}{6}\right)\cdot width_1^{3}\right]\right]}{I_1} = 24.675$ < 145

Rear post slenderness: S1 = $\frac{\left[\left(\frac{499}{25.4}\right)\cdot\left[\left(\frac{1}{6}\right)\cdot width_2^{3}\right]\right]}{I_2} = 32.079$ < 145

Front post FOS = $\frac{15\cdot 10^{3}}{\sigma_front} = 1.961$

Rear post FOS = $\frac{15\cdot 10^{3}}{\sigma_rear} = 2.84$

<u>Investigation of bolts in tension when the imager is pushed forward</u>

In each case below, the bolt limits are compared to "W_dyn", but loading is actually shared with other joints that are in compression or shear.

A) Imager back cover to plate on frame post = two 5/8 grade 5 bolts

FOS = $\frac{(2\cdot Bolt_T_55)}{W_dyn} = 2.302$

B) Mounting plate on rear post to frame = four M8 bolts

FOS = $\frac{(4\cdot Bolt_T_m8)}{W_dyn} = 1.684$

C) Rear post to its base plate = four M8 bolts in shear

FOS = $\frac{(4\cdot Bolt_S_m8)}{W_dyn} = 5.052$

D) Rear post upper-to-lower base plates = three 3/8 grade 5 bolts in shear

FOS = $\frac{(3 \cdot Bolt_S_35)}{W_dyn} = 3.553$

E) Rear post lower base plate to frame = four M8 bolts in shear

FOS = $\frac{(4 \cdot Bolt_S_m8)}{W_dyn} = 5.052$

F) Frame to foot plates = 6*4 M8 bolts (assuming equally loaded)

FOS = $\frac{(6 \cdot 4 \cdot Bolt_S_m8)}{W_dyn} = 30.31$

G) Foot plates to crate base = 6 * (2 out of 4) bolts -- 3/8 grade 5 assumed

FOS = $\frac{(6 \cdot 2 \cdot Bolt_S_35)}{W_dyn} = 14.211$

Bolts in tension when the imager is pushed rearward

In each case below, the bolt limits are compared to "W_dyn", but loading is actually shared with other joints that are in compression or shear. Items 'C' through 'G' immediately above also apply to this situation.

H) Imager front cover to frame plate = four 3/8 grade 8 bolts

FOS = $\frac{(4 \cdot Bolt_T_38)}{W_dyn} = 2.236$

I) Front frame plate to frame = nine M8 bolts

FOS = $\frac{(9 \cdot Bolt_T_m8)}{W_dyn} = 3.789$

LOAD CASE 4: IMAGER TRANSVERSE DIRECTION (LEFT OR RGHT)

The frame bending calc is covered under Case 3 above.

The bolts in shear between the imager and the frames mounting plates, as well as those between the mounting plates and the frame itself, are covered under Case 1 above.

The bolts in shear relating to the rear post base and foot plates are covered under Case 3 above.

Resistance to sliding for two sets of connectors (one in each front post) plus 4 T-nuts in the rear post base plate:

FOS = $\frac{(2 \cdot 5400 + 4 \cdot 1350)}{W_dyn} = 3.438$

ADDITIONAL CONSIDERATION: REAR HOIST RING ADAPTER PLATE

Two hoist rings (McMaster Carr # 2994T91), each rated to 2,500 lbf, are used to pick up the imager (with or without the support cradle). While the forward hoist ring fastens directly to the imager front cover, the rear ring must make use of an adapter plate (shown in red in the image below) in order to position the lift point in the gap between readout crates. The plate is machined from 3/4" thick ASTM A-36 steel.

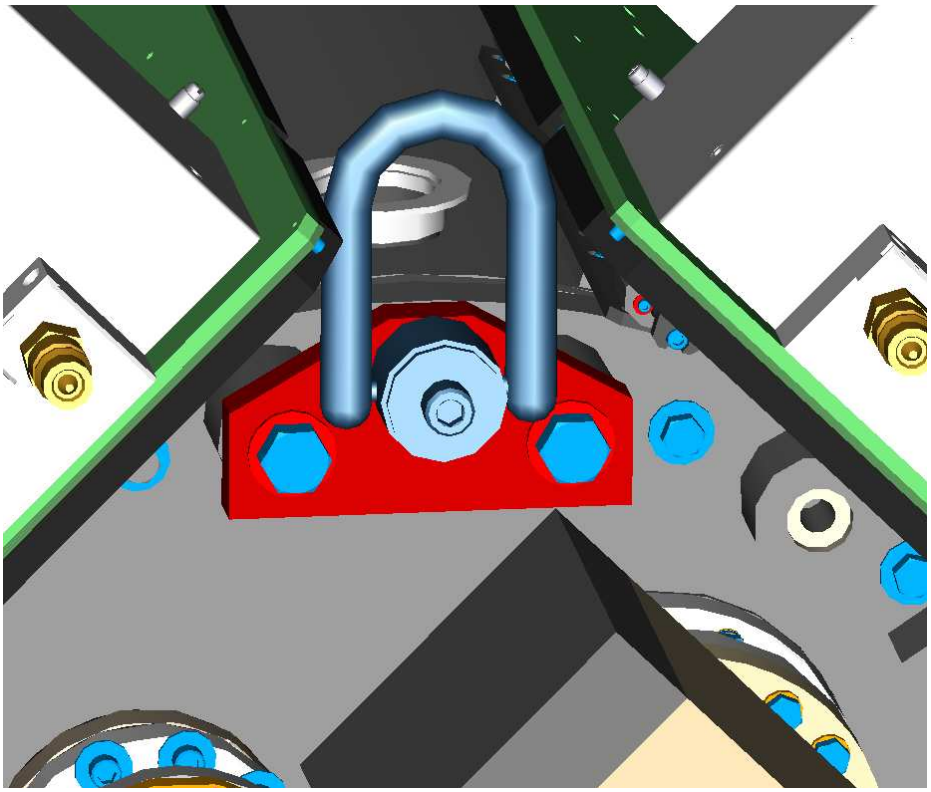

Two 5/8-11 grade 5 bolts in shear: FOS = $\frac{(2 \cdot \text{Bolt_S_55})}{\text{W_static}} = 27.626$

Pullout shear of hoist ring screw for Y=36 ksi (shear yield of 0.6Y assumed) with a 1/2" OD and 3/4" length:

Axial pullout: FOS = $\frac{[(\pi \cdot 0.5 \cdot 0.75) \cdot (0.6 \cdot 36000)]}{\text{W_static}} = 21.602$

Sideway pullout (7/8" to edge of plate): FOS = $\frac{[2 \cdot (0.75 \cdot 0.875) \cdot (0.6 \cdot 36000)]}{\text{W_static}} = 24.066$

The adapter plate design is therefore suitable.

REFERENCES

1. Maytec vendor catalog, "The Profile System," English version 1/2009, www.maytecinc.com

2. Aluminum Association publication, "Aluminum Design Manual 2010," www.aluminum.org

3. http://www.plasticsintl.com/datasheets/Phenolic_G10_FR4.pdf

4. Aluminum Association publication, "Specifications For Aluminum Structures," 5th ed. (1986).

REV	DESCRIPTION	DRAWN	DATE
		APPROVED	DATE

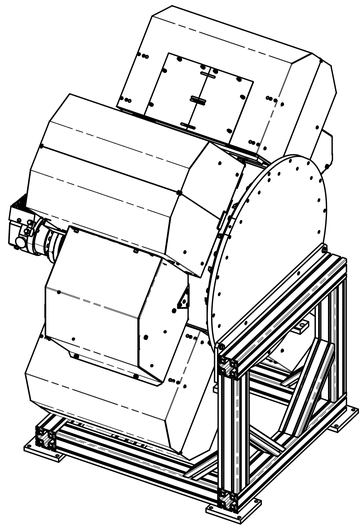

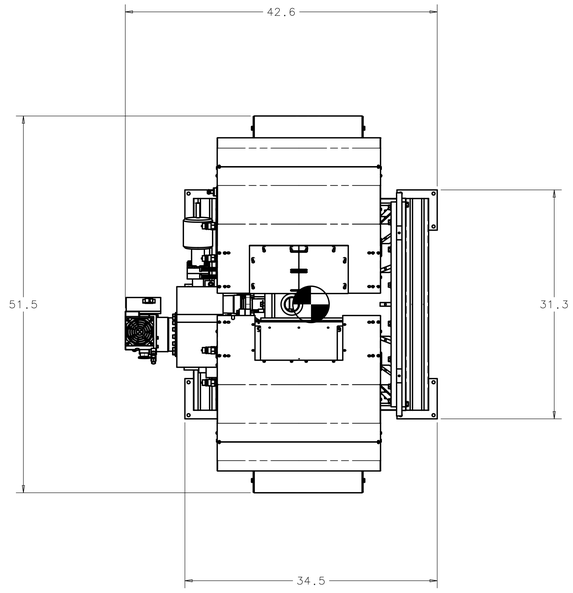

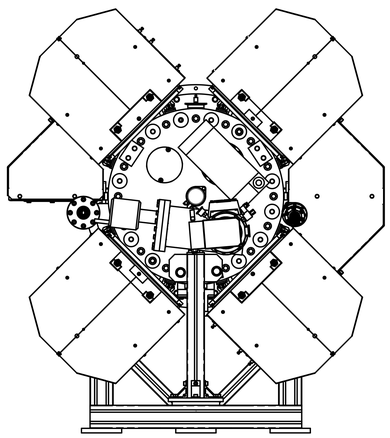

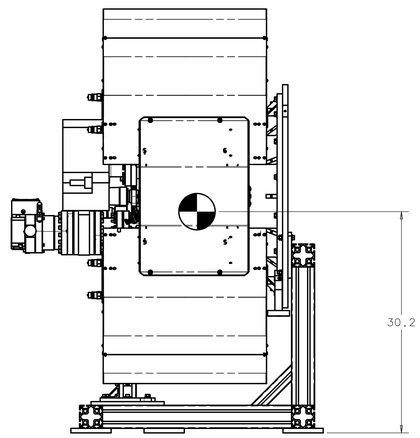

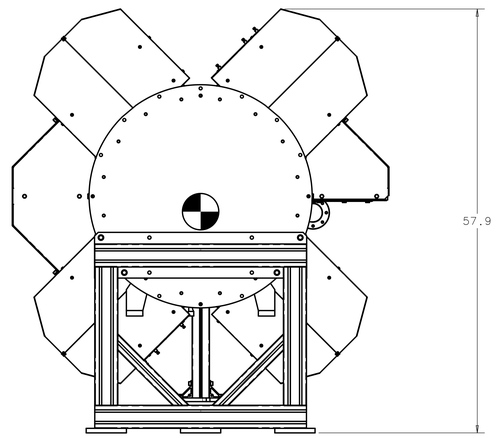

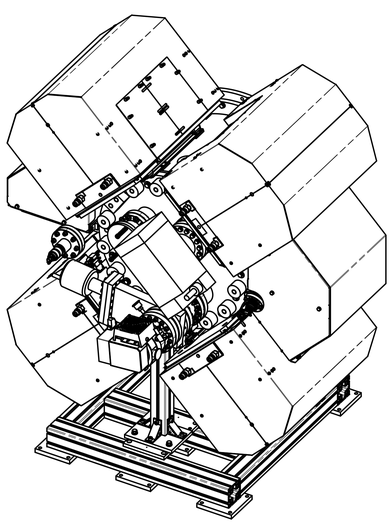

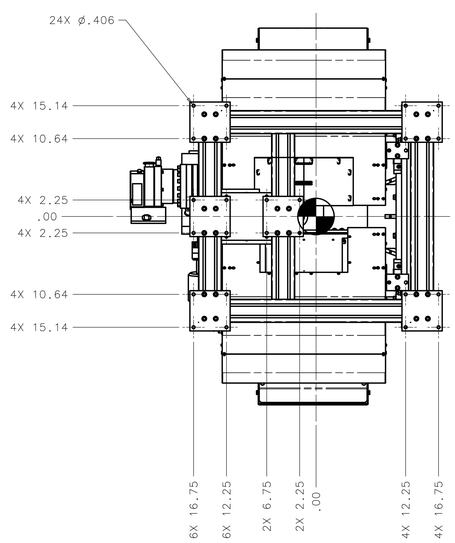

NOTES:

1. ESTIMATED WEIGHT = 1300 LBS
2. ESTIMATED CENTER OF GRAVITY SHOWN

UNLESS OTHERWISE SPECIFIED	ORIGINATOR	G.DERYLO	25-OCT-2010
	DRAWN	G.DERYLO	25-OCT-2010
± ± ±	CHECKED		
1. BREAK ALL SHARP EDGES MAX	APPROVED		
2. DO NOT SCALE DRAWING. 3. DIMENSIONS BASED UPON	USED ON		
4. MAX. ALL MACH. SURFACES √	MATERIAL		
5. DRAWING UNITS:			

FERMI NATIONAL ACCELERATOR LABORATORY
UNITED STATES DEPARTMENT OF ENERGY

CTIO BLANCO DECAM IMAGER SHIPPING CRADLE LAYOUT

SCALE	DRAWING NUMBER	SHEET	REV
1:8	4900.003-ME-480506	1 OF 1	

CREATED WITH : Ideas12NXSeries GROUP: PPD/MECHANICAL DEPARTMENT

SPREADSHEET FROM DES DOCDB # 3204 PLUS CRADLE

ESTIMATED IMAGER WEIGHT
Updated 24 Oct 2010

Part Description	Material	Density (lb/in^3)	Volume (in^3)	Quantity	Weight (lb)	Approx. CG from front flange (in)		Moment (in-lb)
				Grand Total =	1362.6	10.8		
				Without Crates =	1079.6	10.1		
				Without C5 =	1058.1	14.1		
				Without Back Cover =	1081.7	7.9		
				Without Back Cover & C5 =	777.3	11.2		
C5 Assembly					304.5	-0.5		-157.7
Flange	304	0.289	826.80	1	238.9	-0.6	-145.8	
C5 Window	F.S.	0.08	674.80	1	54.0	0.2	9.2	
Adjuster	304	0.289	4.93	4	5.7	-2.3	-13.1	
Clamp	???	0.07	2.66	12	2.2	-2.0	-4.5	
O-ring	Viton	0.07	1.52	2	0.2	-0.1	0.0	
Screw	304	0.289	0.21	36	2.1	-2.0	-4.3	
Cover Bolts	304	0.289	0.27	16	1.3	0.6	0.8	M MZ
Blank Cover	304	0.289	535.30	0	0.0 154.7	-0.4	0.0	156 -57.2
Vessel Shell Weldment					253.0	8.9		2245.3
Vessel Tube	304	0.289	438.50	1	126.7	8.5	1077.2	
Front Flange	304	0.289	132.90	1	38.4	0.4	15.4	
Middle Flange	304	0.289	91.16	1	26.3	12.5	329.3	
Rear Flange	304	0.289	106.20	1	30.7	16.6	509.5	
Mitered Tube A	304	0.289	0.80	1	0.2	17.0	3.9	
Mitered Tube B	304	0.289	1.59	1	0.5	17.0	7.8	
Mitered Tube C	304	0.289	2.25	1	0.6	17.0	11.0	
Mitered Tube D	304	0.289	2.83	1	0.8	17.0	13.9	
Flange 32	304	0.289	3.12	1	0.9	19.0	17.1	
Flange 55	304	0.289	6.98	1	2.0	19.0	38.3	
Gusset	304	0.289	0.54	16	2.5	1.2	3.0	
Piping Vac Jacket	304	0.289	0.27	2	0.2	14.3	2.2	
Piping Flange	304	0.289	0.91	2	0.5	14.3	7.5	
VIB Feedthru Port	304	0.289	13.92	2	8.0	8.5	68.4	
VIB Bumper Mounting Tab	304	0.289	0.71	2	0.4	17.0	7.0	
Outer Ground Block	304	0.289	24.52	1	7.1	8.5	60.2	
Inner Gound Blocks	304	0.289	0.72	17	3.6	9.0	32.0	
Rear foot - left block	304	0.289	1.05	1	0.3	17.0	5.1	
Rear foot - right block	304	0.289	1.05	1	0.3	17.0	5.1	
Monsoon Rail Block	304	0.289	0.62	16	2.8	11.0	31.3	
Back Cover Weldment					150.5	17.9		2690.5
Plate	304	0.289	410.80	1	118.7	0.5	57.0	
Boss 1	304	0.289	4.38	13	16.5	1.7	28.3	
Boss 2	304	0.289	8.34	3	7.2	1.7	12.4	
Gage tube	304	0.289	0.42	1	0.1	1.8	0.2	
Gage flange	304	0.289	0.66	1	0.2	3.0	0.6	
Relief nipple	304	0.289	8.72	1	2.5	3.6	9.1	
Turbo nipple	304	0.289	14.99	1	4.3	4.3	18.6	
Baffle 1	304	0.289	0.11	1	0.0	-0.3	0.0	
Baffle 2	304	0.289	0.19	1	0.1	-0.7	0.0	
Baffle 3	304	0.289	0.71	2	0.4	-0.6	-0.2	
Baffle 4	304	0.289	0.78	2	0.5	-0.7	-0.3	
Back Cover Other					130.3	27.0		3513.6
Turbo pump					30.0	16.0	480.0	
Gate valve					25.0	10.1	252.8	
Turbo nipple	304	0.289	25.15	1	7.3	6.7	48.9	
Ion pump					43.0	9.8	421.4	
Ion nipple	304	0.289	27.28	1	7.9	2.4	18.9	
Gage					1.5	5.3	8.0	
Gage Clamp					0.5	3.3	1.7	
Relief valve	304	0.289	23.43	1	6.8	6.0	40.6	
Baffle 1	304	0.289	0.29	1	0.1	-0.7	-0.1	
Baffle 2	304	0.289	0.22	1	0.1	-1.0	-0.1	
Baffle 3	304	0.289	3.29	2	1.9	-1.8	-3.4	
Baffle 4	304	0.289	1.82	2	1.1	-2.6	-2.7	
O-ring	Viton	0.07	1.90	1	0.1	0.1	0.0	
Mounting bolts	304	0.289	0.29	16	1.3	6.0	7.9	
Teflon gaskets	Teflon	0.078	2.29	2	0.4	2.7	1.0	
Vac bolts	304	0.289	0.19	64	3.5	5.0	17.6	
FPSP Assembly					113.7	7.3		826.8

Estimated weight + CG of the Imager during the transport to Chile
- Greg Derylo
11 Jan 11

FPSP	6061	0.1	368.00	1	36.8	4.3	158.2	
CCDs with Screws		1	0.23	74	16.9	3.4	57.6	
Cables		1	0.10	74	7.4	7.0	51.8	
Hub 1	Ti	0.163	0.48	4	0.3	4.3	1.4	
Hub 2	204	0.289	0.11	4	0.1	4.3	0.5	
Rod	Ti	0.163	0.19	8	0.3	7.7	1.9	
Base	G10	0.065	0.26	8	0.1	10.4	1.4	
Screws	304	0.289	0.08	4	0.1	7.5	0.7	
Base Ring	304	0.289	117.00	1	33.8	11.2	377.0	
Shims	304	0.289	2.06	16	9.5	12.0	114.3	
Screws	304	0.289	0.46	16	2.1	12.8	27.5	
RTD Assembly		1	1.00	4	4.0	4.3	17.2	
Cable strain relief 1	6061	0.1	0.12	74	0.9	12.8	10.9	
Cable strain relief 2	304	0.289	0.01	74	0.2	5.0	1.2	
Cable strain screws	304	0.289	0.05	74	1.0	5.0	5.1	
VIB Assemblies					53.3	11.6		617.5
East board	G10	0.065	20.95	1	1.4	9.5	12.9	
East board components		1	1.00	1	1.0	9.5	9.5	
East board inner edge stiffener	G10	0.065	1.32	1	0.1	8.5	0.7	
West board	G10	0.065	23.96	1	1.6	9.5	14.8	
West board components		1	2.00	1	2.0	9.5	19.0	
West board inner edge stiffener	G10	0.065	1.84	1	0.1	8.5	1.0	
Flange	304	0.289	16.60	2	9.6	8.5	81.6	
Ground bar	6061	0.1	0.33	4	0.1	8.5	1.1	
Flange bolts	304	0.289	0.19	12	0.6	8.5	5.5	
Edge guard frame / plates / bars		1	3.11	2	6.2	12.1	75.3	
VIB-to-Monsoon cables		1	5.00	4	20.0	13.4	268.0	
Cable cover shells	Al	0.1	94.94	1	9.5	12.1	114.9	
Cable cover t-nuts & fasteners	Stl	0.289	3.78	1	1.1	12.1	13.2	
Monsoon Crates					283.0	13.4		3792.7
Crate (without insulation)		1	50.00	4	200.0			
Crate insulation		1	4.10	8	32.8			
Mount plate		1	7.47	4	29.9			
Rail	304	0.289	2.79	8	6.4			
Rail support	Steel	0.289	1.44	8	3.3			
Rail base plate	304	0.289	3.86	8	8.9			
Rail stop plate	304	0.289	0.17	16	0.8			
Screws	304	0.289	0.19	16	0.9			
LN2 Loop					15.4	11.1		171.7
Tube	304	0.289	10.50	1	3.0	12.8	38.8	
VCR fitting	304	0.289	2.54	2	1.5	14.3	21.0	
Bar	Copper	0.324	0.91	10	3.0	12.4	36.7	
Standoff	G10	0.065	0.10	10	0.1	12.6	0.8	
Screw	304	0.289	0.02	10	0.1	12.6	0.7	
Braid 1	Copper	0.324	1.35	10	4.4	11.2	49.0	
Braid 2	Copper	0.324	0.45	10	1.5	8.9	12.9	
Braid 3	Copper	0.324	0.51	10	1.6	5.9	9.7	
Braid 4	Copper	0.324	0.12	10	0.4	5.1	2.0	
Miscellany					38.3	12.4		475.1
55-pin flange	304	0.289	8.96	1	2.6	20.0	51.8	
55-pin feedthru		1	1.00	1	1.0	20.0	20.0	
55-pin screws	304	0.289	0.15	8	0.3	20.0	6.9	
32-pin flange	304	0.289	3.83	1	1.1	20.0	22.2	
32-pin feedthru		1	0.75	1	0.8	20.0	15.0	
32-pin screws	304	0.289	0.22	8	0.5	20.0	10.0	
Large ground block assy	Copper	0.324	30.00	1	9.7	8.5	82.6	
Large ground block screws	304	0.289	0.11	16	0.5	8.5	4.1	
Wiring		1	15.00	1	15.0	14.0	210.0	
Wire loop supports	304	0.289	0.52	11	1.7	14.0	23.3	
Vessel Feet - Front G10	G10	0.065	6.46	1	0.4	0.6	0.2	
Vessel Feet - Front Al	6061	0.1	26.32	1	2.6	0.6	1.4	
Vessel Feet - Front Screws	Stl	0.289	1.72	1	0.5	0.6	0.3	
Vessel Feet - Rear SS	304	0.289	4.69	1	1.4	17.2	23.3	
Vessel Feet - Rear G10	G10	0.065	1.03	1	0.1	17.2	1.2	
Vessel Feet - Rear Screws	Stl	0.289	0.56	1	0.2	17.2	2.8	
Exterior LN2 Piping					20.6	26.6		547.4
VCR fitting	304	0.289	0.84	2	0.5	14.3	7.0	
Tube 1	304	0.289	5.04	2	2.9	24.0	69.9	

Tube 2	304	0.289	14.94	2	8.6	24.0	207.2			
Clamp		1	1.00	2	2.0	14.3	28.6			
End	304	0.289	11.28	2	6.5	36.0	234.8			
									CG in the Y Direction	
Maytec Shipping Cradle Frame (not included in totals above)					114.7	8.6		985.6	-23.5	-2694.2
Part 1	Al	0.1	96.20	3	28.9	6.9	198.0		-22.8	-657.0
Part 2	Al	0.1	62.80	2	12.6	-2.8	-35.2		-19.1	-239.9
Part 3	Al	0.1	85.90	2	17.2	11.7	201.0		-30.1	-517.1
Part 4	Al	0.1	89.10	1	8.9	-1.0	-8.9		-8.1	-72.2
Part 45	Al	0.1	12.50	2	2.5	0.9	2.3		-26.2	-65.5
Part 46	Al	0.1	24.10	2	4.8	-2.8	-13.5		-24.1	-116.2
Part 5	G10	0.065	14.40	4	3.7	11.7	43.8		-32.0	-119.8
Part 6	Al	0.1	75.30	1	7.5	16.2	122.0		-30.1	-226.7
Part 7	Stl	0.289	31.90	1	9.2	21.2	195.4		-28.3	-260.9
Connectors		1	0.13	56	7.3	10.0	72.8		-24.0	-174.7
Fasteners	Stl	0.289	0.20	40	2.3	0.0	0.0		-24.0	-55.5
Part 20	Al	0.1	12.10	1	1.2	19.8	24.0		-9.8	-11.9
Part 21	Al	0.1	44.40	1	4.4	21.2	94.1		-17.8	-79.0
Part 22	Al	0.1	0.55	1	0.1	20.0	1.1		-7.8	-0.4
Part 23	Al	0.1	23.20	1	2.3	22.0	51.0		-27.8	-64.5
Gussets	Al	0.1	1.28	3	0.4	22.0	8.4		-27.1	-10.4
Fasteners	Stl	0.289	4.59	1	1.3	22.0	29.2		-17.0	-22.6
Hoist ring - front	Stl	0.289	9.32	1	2.7	-1.5	-4.0		13.7	36.9
Hoist ring - rear	Stl	0.289	9.32	1	2.7	21.0	56.6		11.5	31.0
Rear hoist ring bracket & screws	Stl	0.289	12.53	1	3.6	19.9	72.1		10.7	38.7

M total	MZ_{total}	MY_{total}
156	-57.2	
253	2245	
150.5	2691	
130.3	3514	0
113.7	827	
53.3	618	
283	3793	
38.3	475	
114.7	986	
		-2694
1293 lb	15092 in lb	-2694 in lb

$$CG_Z = \frac{15092}{1293} = 11.7 \text{ in from front flange of vessel}$$

$$CG_Y = \frac{-2694}{1293} = -2.1 \text{ in from vessel } ℄$$

light

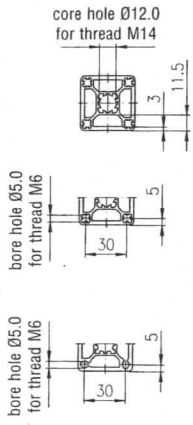

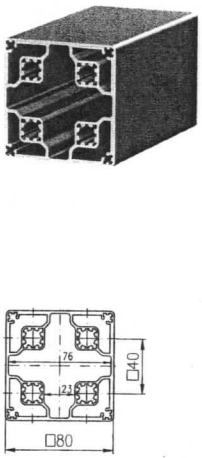

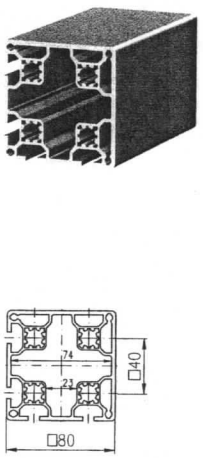

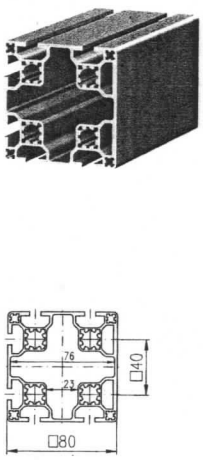

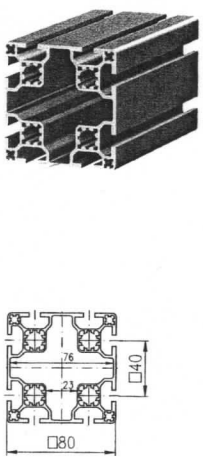

Description	Profile 80×80, 0E, LP	Profile 80×80, 4E, corner, LP	Profile 80×80, 6E, LP	Profile 80×80, 8E, LP
bar, 6 m	1.11.080080.03LP.60	1.11.080080.42LP.60	1.11.080080.63LP.60	1.11.080080.83LP.60
packing unit (number)	1.11.080080.03LP.61 (2)	1.11.080080.42LP.61 (2)	1.11.080080.63LP.61 (2)	1.11.080080.83LP.61 (2)
moment of inertia cm⁴ moment of resistance cm³ weight kg/m	I_x = 135.0 I_y = 135.0 W_x = 33.5 W_y = 33.5 G = 4.7	I_x = 128.0 I_y = 128.0 W_x = 32.0 W_y = 32.0 G = 4.5	I_x = 121.3 I_y = 116.0 W_x = 30.3 W_y = 29.0 G = 4.2	I_x = 114.0 I_y = 114.0 W_x = 28.4 W_y = 28.4 G = 4.1

heavy

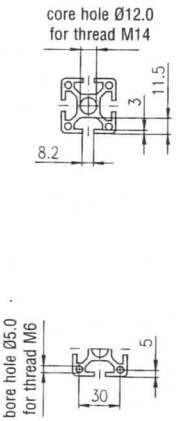

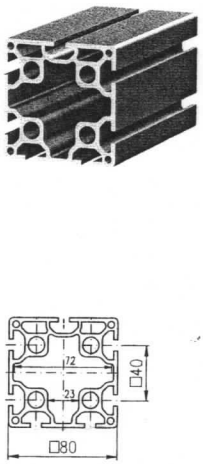

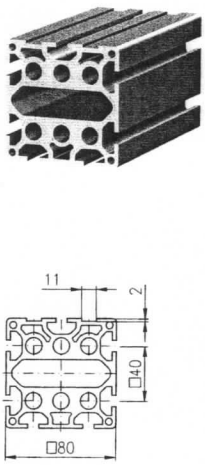

Description		Profile 80×80, 7E, SBP	Profile 80×80, 7E, SP	Profile 80×80, 8E, SP
bar, 6 m		1.11.080080.73SBP.60	1.11.080080.79SP.60	1.11.080080.83SP.60
packing unit (number)		1.11.080080.73SBP.61 (2)	1.11.080080.79SP.61 (2)	1.11.080080.83SP.61 (2)
moment of inertia cm⁴ moment of resistance cm³ weight kg/m		I_x = 145.0 I_y = 141.0 W_x = 36.2 W_y = 35.2 G = 5.3	I_x = 173.0 I_y = 160.0 W_x = 43.3 W_y = 40.0 G = 7.6	I_x = 166.0 I_y = 166.0 W_x = 41.4 W_y = 41.4 G = 5.9

machining data ☞ *Profile machining 1.1A*

light

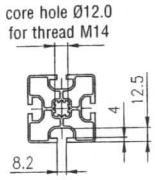

Description	Profile 60×60, 2E, LP	Profile 60×60, 4E, LP		
bar, 6 m	1.11.060060.23LP.60	1.11.060060.43LP.60		
packing unit (number)	1.11.060060.23LP.61 (6)	1.11.060060.43LP.61 (6)		
moment of inertia cm⁴ moment of resistance cm³ weight kg/m	I_x = 35.1 I_y = 37.7 W_x = 11.7 W_y = 12.5 G = 2.9	I_x = 35.5 I_y = 35.5 W_x = 11.7 W_y = 11.7 G = 2.7		

heavy

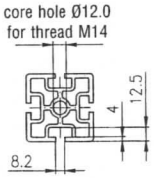

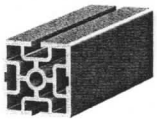

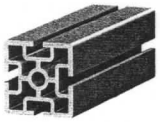

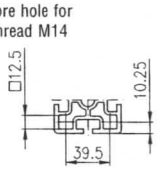

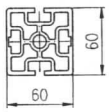

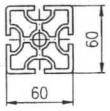

Description	Profile 60×60, 2E, SP	Profile 60×60, 4E, SP		
bar, 6 m	1.11.060060.23SP.60	1.11.060060.43SP.60		
packing unit (number)	1.11.060060.23SP.61 (6)	1.11.060060.43SP.61 (6)		
moment of inertia cm⁴ moment of resistance cm³ weight kg/m	I_x = 55.9 I_y = 58.5 W_x = 18.6 W_y = 19.5 G = 4.3	I_x = 56.0 I_y = 56.0 W_x = 18.7 W_y = 18.7 G = 4.2		

machining data ☞ *Profile machining 1.1A*

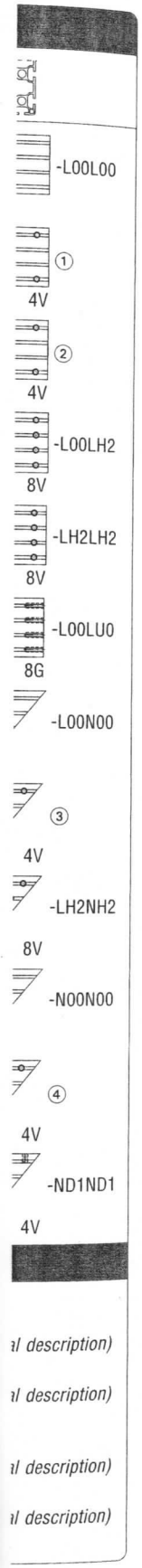

Extruded profile as per DIN EN 12020

(fine)
(Replacement for DIN 17615)

Aluminium alloy Al Mg Si 0.5 F25
Material Nr. 3.3206.72 (low temp. annealed)

Functional length: 6,000 mm
Delivery length: 6,060 mm + 10 mm

Mechanical data

(Values given in the direction of the press flow)

Tensile strength Rm:	min.	250 N/mm²
Elongation 0.2:	min.	200 N/mm²
Stress point A_5:	min.	10 %
Stress point A_{10}:	min.	8 %
E-Module:	approx.	70,000 N/mm²
Brinell hardness:	approx.	75 HB 2.5/187.5
Co-efficient of elongation:		23.8 x 10^{-6}/K

Surface as per DIN 17611:
E6/EV1 - dull finish and anodised colours
Coat thickness approx. 10 µm
Coat hardness 250-350 HV
Special colours upon request.
The surface area - subject to technical procedure - can show optical changes.

Profile tolerance

(Excerpt from DIN EN 12020-2)

Nominal dimensions:
The dimension deviation depends on the precision with which the tooling is manufactured, the tooling wear and the variation during the extrusion process. For one manufacturing setup the variation within one profile is 0.01 mm.

Profile tolerance		
Dim. range in mm from	to	Tolerance in mm
-	10	± 0.15
10	15	± 0.20
15	30	± 0.25
30	45	± 0.30
45	60	± 0.40
60	90	± 0.45
90	120	± 0.60
120	150	± 0.80
150	180	± 1.00
180	240	± 1.20
240	300	± 1.50

Flatness of profile surfaces

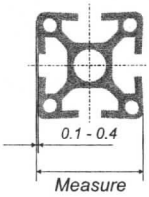

In order to optimize the connection stability, all profile surfaces are designed and manufactured with concave surfaces. This assures that the assembled profiles contact on the outer edges only (line of contact).
When tightening the connectors the slot flanks will be drawn to the mounting profile within the elastic range and will keep the connectors under tension.

Straightness tolerance

of the edge in longitudinal direction

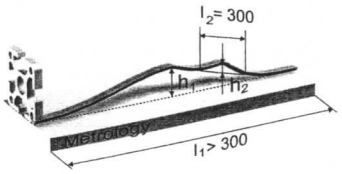

At a certain length l_1 the given tolerance h_1 is not to be exceeded.
For each incremental length of l_2 = 300 mm the deviation h_2 is not to exceed 0.3 mm.

Straightness tolerance		
Length l_1 in m from	to	Tolerance h_1 in mm
-	1	0.7
1	2	1.3
2	3	1.8
3	4	2.2
4	5	2.6
5	6	3.0

Flatness tolerance

(Twist tolerance)

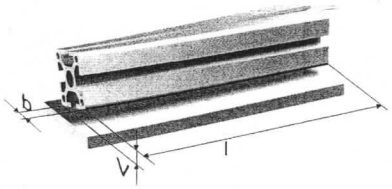

Width *b* in mm		Flatness tolerance					
Dim. range		at length l in m					
from	to	to 1	1 to 2	2 to 3	3 to 4	4 to 5	5 to 6
-	25	1.0	1.5	1.5	2.0	2.0	2.0
25	50	1.0	1.2	1.5	1.8	2.0	2.0
50	75	1.0	1.2	1.2	1.5	2.0	2.0
75	100	1.0	1.2	1.5	2.0	2.2	2.5
100	125	1.0	1.5	1.8	2.2	2.5	3.0
125	150	1.2	1.5	1.8	2.2	2.5	3.0
150	200	1.5	1.8	2.2	2.6	3.0	3.5
200	300	1.8	2.5	3.0	3.5	4.0	4.5

nbined with

when

nchor head
nto the
anchor
ed.

bore the
all

nm

Torque tightening values for connector setscrew

PG	Slot	Setscrew special execution	Torque value recommended	max.
20	H	M6×8	5.0 Nm	6.0 Nm
	F	M8×10	15.0 Nm	20.0 Nm
30	F	M10×12	25.0 Nm	30.0 Nm
40	E	M10×12	30.0 Nm	40.0 Nm
45	E	M10×12	30.0 Nm	40.0 Nm
50	E	M10×12	30.0 Nm	40.0 Nm
60	E	M10×12	30.0 Nm	40.0 Nm

22 ft-lb

Comments
The max. tightening values are only valid for the MayTec setscrew and can not be reached by the usual commercial quality standard.

Tension load

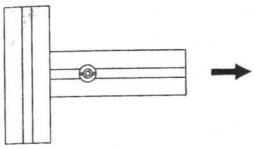

PG	Slot	max. Tensile strength Connector Standard	Universal	Square head	T-Nut	
20	H	-	1,500 N	-	M4	4,000 N
	F	5,000 N	6,000 N	8,000 N	M8	8,000 N
30	F	5,000 N	6,000 N	8,000 N	M8	8,000 N
40	E	10,000 N	12,000 N	12,000 N	M8	12,000 N
45	E	15,000 N	18,000 N	20,000 N	M8	20,000 N
50	E	15,000 N	18,000 N	20,000 N	M8	20,000 N
60	E	15,000 N	18,000 N	20,000 N	M8	20,000 N

Comments
All values given have been tested with pre-tension of the connectors and maximum torque value and refer to the connection of two identical profiles.

Slide load

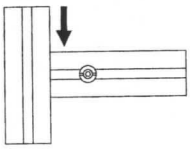

Flexure load

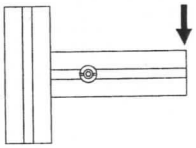

PG	Profile	Slot	Pcs	max. Slide strength Standard, Universal, Square head	E-connector *(Standard, Universal)*	max. Flexure strength Connector Standard, Universal, Square head □	▭	▯
20	20×20	H	1	1,500 N	-	50 Nm		
	20×40		2	3,000 N	-		100 Nm	150 Nm
	40×40		4	6,000 N	-	300 Nm		
	20×30	F	1	5,000 N	7,500 N			65 Nm
30	30×30	F	1	5,000 N	7,500 N	100 Nm		
	30×50		1	5,000 N	7,500 N		100 Nm	160 Nm
	30×60		2	10,000 N	15,000 N		200 Nm	400 Nm
	30×100, 5F		2	10,000 N	15,000 N		200 Nm	640 Nm
	30×100, 8F		3	15,000 N	22,500 N		300 Nm	960 Nm
	30×150, 8F		3	15,000 N	22,500 N		300 Nm	1,500 Nm
	60×60 angle		3	15,000 N	22,500 N	500 Nm		
	60×60		4	20,000 N	30,000 N	800 Nm		
	30×150	E	2	12,000 N	18,000 N		500 Nm	2,000 Nm
40	40×40	E	1	6,000 N	9,000 N	250 Nm		
	40×60		1	6,000 N	9,000 N		250 Nm	375 Nm
	40×80		2	12,000 N	18,000 N		500 Nm	1,000 Nm
	40×120		3	18,000 N	27,000 N		750 Nm	2,250 Nm
	40×160		4	24,000 N	36,000 N		1,000 Nm	4,000 Nm
	80×80 angle		3	18,000 N	27,000 N	1,250 Nm		
	80×80, 8E		4	24,000 N	36,000 N	2,000 Nm		
	80×120		6	36,000 N	54,000 N		3,000 Nm	4,500 Nm
	120×120		8	48,000 N	72,000 N	6,000 Nm		
	80×160		8	48,000 N	72,000 N		4,000 Nm	8,000 Nm
45	45×45	E	1	6,000 N	9,000 N	360 Nm		
	45×60		1	6,000 N	9,000 N		360 Nm	480 Nm
	45×90		2	12,000 N	18,000 N		720 Nm	1,440 Nm
	90×90		4	24,000 N	36,000 N	2,880 Nm		
50	50×50	E	1	6,000 N	9,000 N	400 Nm		
	50×100, 6E		2	12,000 N	18,000 N		800 Nm	1,600 Nm
	50×100, 8E		3	18,000 N	27,000 N		1,200 Nm	2,400 Nm
	50×150		3	18,000 N	27,000 N		1,200 Nm	3,600 Nm
	100×100		4	24,000 N	36,000 N	3,200 Nm		
	100×200		8	48,000 N	72,000 N		6,400 Nm	12,800 Nm
60	60×60	E	1	6,000 N	9,000 N	480 Nm		
	60×90		2	12,000 N	18,000 N		960 Nm	1,440 Nm

1 N ≈ .22481 lbf

1 Nm ≈ .7376 ft-lbf

The listed values are valid for all light and heavy profiles

2