REV	DESCRIPTION	DRAWN	DATE
		APPROVED	DATE

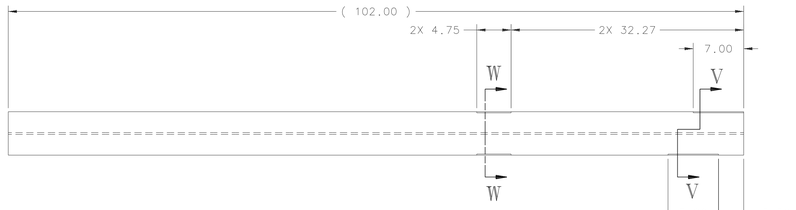

DETAIL M
ITEM 1

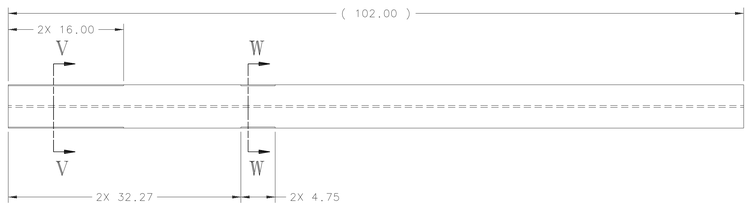

DETAIL N
ITEM 2

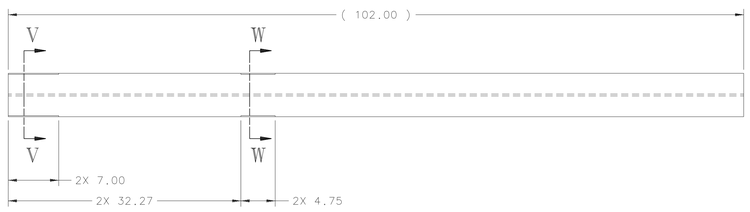

DETAIL P
ITEM 3

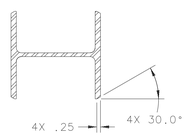

SECTION V–V
SCALE = 1/4

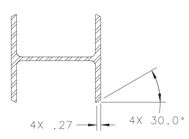

SECTION W–W
SCALE = 1/4

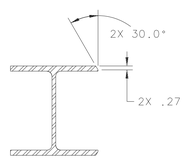

SECTION X–X
SCALE = 1/4

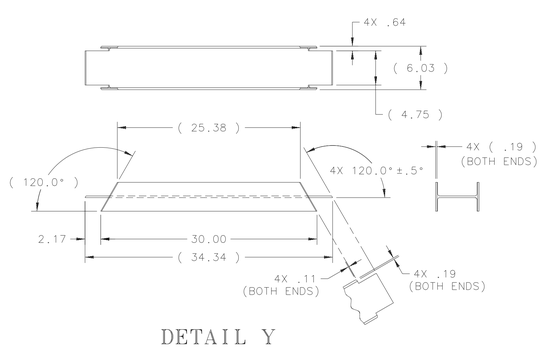

DETAIL Y
ITEM 7

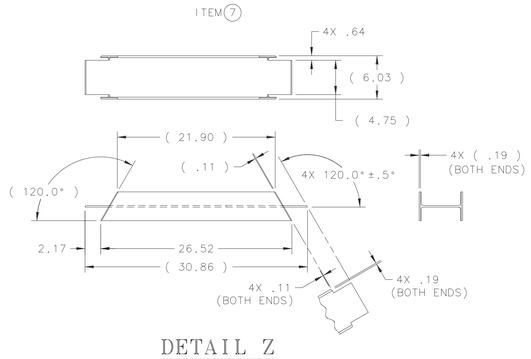

DETAIL Z
ITEM 8

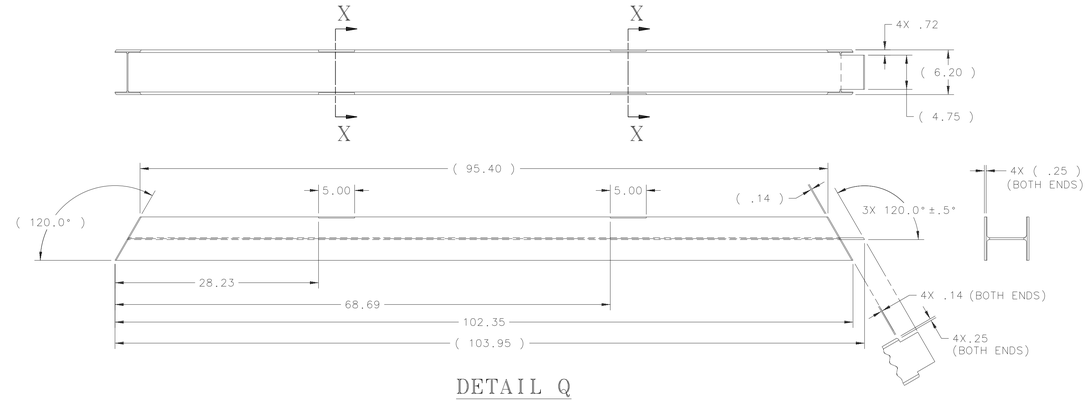

DETAIL Q
ITEM 4

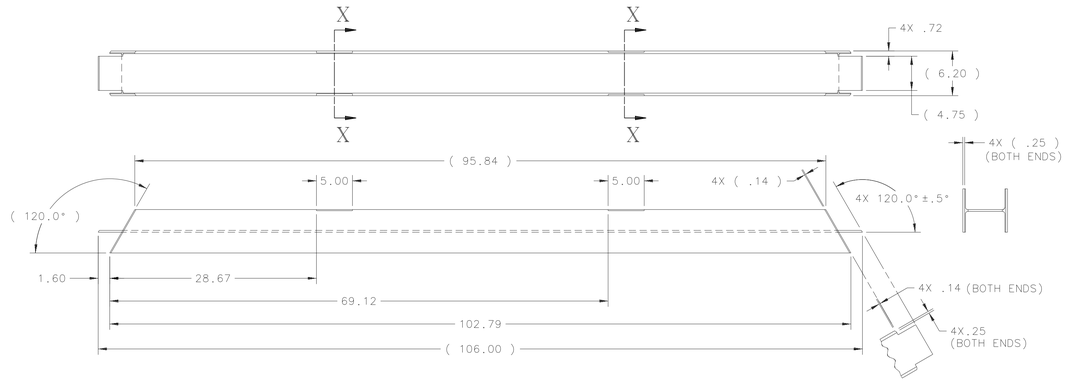

DETAIL R
ITEM 5

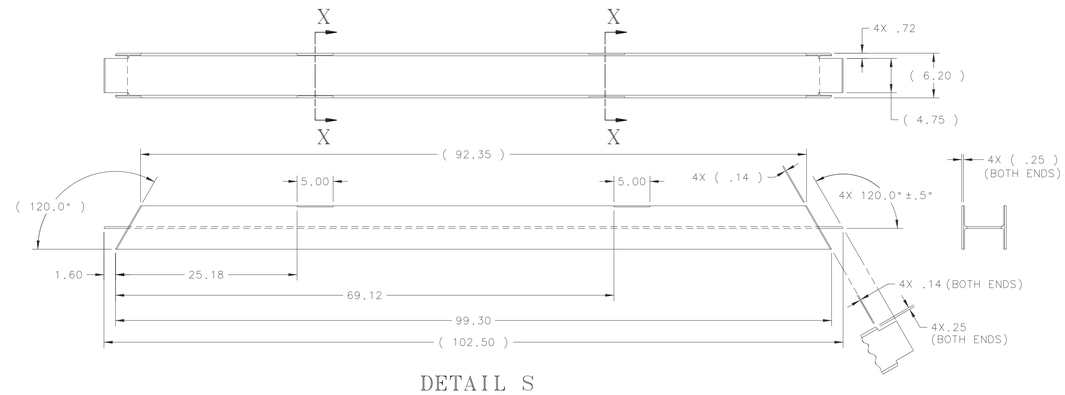

DETAIL S
ITEM 6

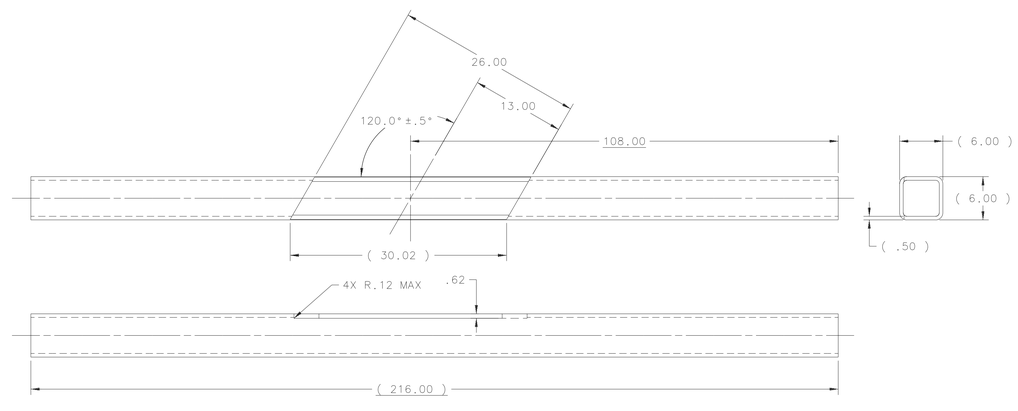

DETAIL T
ITEM 20

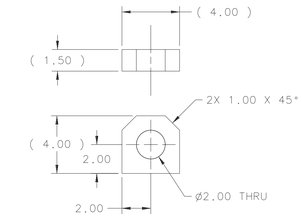

DETAIL G
ITEM 19
SCALE = 1/4

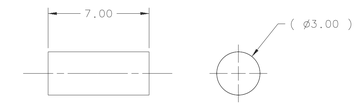

DETAIL K
ITEM 15
SCALE = 1/4

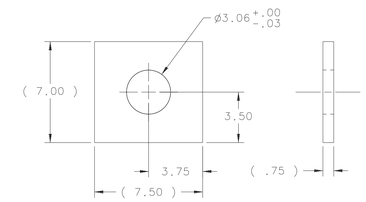

DETAIL AB
ITEM 18
SCALE = 1/4

NOTICE: IMAGE OBTAINED FROM FERMILAB WEB SITE
This information is provided for REFERENCE use only.
Not for MANUFACTURE, or DESIGN INFORMATION.
All information contained in this document represents work sponsored by an agency of the U.S. Government.
Neither the U.S. Government nor any agency thereof, nor Universities Research Association, Inc., nor any of their employees or officers, makes any warranty, express or implied, or assumes any legal liability or responsibility for the accuracy, completeness, or usefulness of any information, apparatus, product or process disclosed, or represents that its use would not infringe privately owned rights.

UNLESS OTHERWISE SPECIFIED			ORIGINATOR	I.FANG	03-JAN-2006
.XX	.XXX	ANGLES	DRAWN	T.SPERRY	03-JAN-2006
± .06	± - -	± 1°	CHECKED	C.GRIMM	19-JAN-2006
1. BREAK ALL SHARP EDGES MAX. 2. DO NOT SCALE DRAWING. 3. DIMENSIONS BASED UPON ASME Y14.5M-1994. 4. MAX. ALL MACH. SURFACES ✓ 5. DRAWING UNITS: U.S. INCH			APPROVED	I.FANG	19-JAN-2006
			USED ON		
			MATERIAL	SEE PARTS LIST	

FERMI NATIONAL ACCELERATOR LABORATORY
UNITED STATES DEPARTMENT OF ENERGY

PPD/MECHANICAL DEPT.
CYCLOTRON MAGNET
LIFTING FIXTURE ASSY

SCALE	DRAWING NUMBER	SHEET	REV
1/8 & AS NOTED	9204.200-ME-435680	3 OF 3	

CREATED WITH : Ideas11NXSeries | GROUP: PPD/MECHANICAL DEPARTMENT