BELOW-THE-HOOK LIFTING DEVICE
Engineering Note Cover Page

Lifting Device Numbers:

FNAL Site No/ _____ Div. Specific No. 179 Asset No. _____

If applicable — If applicable — If applicable

ASME B30.20 Group: (check one)

- [ ] Group I — Structural and Mechanical Lifting Devices
- [x] Group II — Vacuum Lifting Devices
- [ ] Group III — Magnets, Close Proximity Operated
- [ ] Group IV — Magnets, Remote Operated

Device Name or Description: INPD Vacuum Lifting Fixture

Device was (check all applicable)

- [ ] Purchased from a Commercial Lifting Device Manufacturer. Mfg Name _____
- [ ] Designed and Built at Fermilab
- [ ] Designed by Fermilab and Built by a Vendor. Assy drawing number _____
- [x] Provided by a User or other Laboratory
- [ ] Other: Describe _____

Engineering Note Prepared by: R. J. Woods Date: 1/3/2011

Engineering Note Reviewed by: D. Poshka Date: 1/4/2011

Lifting Device Data:

Capacity: 270 lbs

Fixture Weight: 1000 lbs w/ vacuum pump

Service: [x] normal [ ] heavy [ ] severe (refer to B30.20 for definitions)

Duty Cycle _____ 8, 16 or 24 hour rating (applicable to groups III, and IV)

Inspections Frequency _____

Rated Load Test by FNAL (if applicable) Date _____ Load _____

[ ] Check if Load Test was by Vendor and attach the certificate

Satisfactory Load Test Witnessed by: _____

Signature (of Load Test Witness) _____

Notes or Special Information:

NOvA

INPD VACUUM LIFTING FIXTURE

R. J. WOODS
JAN. 3, 2011

1

NOTE: ONLY GRAY VACUUM CUPS WILL BE USED.

FIXTURE WEIGHT:

HSS 8x8x1/4x156"	= 154/12 (25.82) (1)	336#
HSS 6x6x3/16x2x9"	9/12 (14.53) (2)	22#
HSS 2x2x1/4x4x40"	40/12 (5.41) (4)	72#
3x5.7x36x3	36/12 (5.7) (3)	51#

SHORT 2x2x1/4

10.08"
17.83"
16.83"
16.83"
18.14
10.00
89.71"

(91.32+89.71)/12 (5.41) = 41#

TRUNION TUBE

$A = 0.785398(d^2 - d_1^2)$
$= 0.785398(6^2 - 5^2)$
$= 8.64 \text{ IN}^2$

LENGTH = 34" $8.64(34) = 294 \text{ IN}^3$

$W = 294/1728(490)$
$= 83^{\#}$ EA 83 (2) 166#

GEAR 44#

VACUUM PUMP (ON ATTACHED LABEL) (VPE3-X) 220#

952#

USE 1000# W/PUMP
780# W/O PUMP

MODULE WEIGHT:

VERTICAL = 164" LONG = 270#
HORIZONTAL = 110" LONG = 150#

RATED CAPACITIES:

VAC-PACK GENERATOR (VPE3-X) = 8000# (FROM MANF. CATALOG PAGE 9)

VACUUM CUP SIDE MOUNT (P557R-NBR200) = 75# (FROM MANUF. CATALOG PAGE 11)

MAXIMUM LOAD ON VACUUM CUP:

ALLOWABLE FROM B30.20-1993 P. 23:

AT 22" Hg VACUUM:

UPC = A (HS/2) = $\pi(6)^2/4\,(22.0/2)$ = 311# (20-2.2.2)

MAX. HORIZ LIFT = 50% UPC = 156#

MAX. VERT LIFT = 25% UPC = 78#

MAX. LOAD CONTROLLED BY BRACKET = 75#

ACTUAL LOAD:

MAXIMUM LOAD APPLIED TO VACUUM CUP:

HORIZONTAL MODULE (FIGURE 2)

MAX. AREA = 43" WIDE

P = ((43/110)/2) 150#

= 29#

VERTICAL MODULE (FIGURE 3)

P = ((43/164)/2) 270#

= 35#

BOTH 35# AND 29# ARE LESS THAN 75# ok

CHECK HSS 2x2x1/4 FOR MAX. LOAD OF 75#:

MAX. SPAN = 11.38" (FIGURE 1)

M = 11.38(75)

= 854 #-IN

S_x = .766 IN^3

f_b = 854/.766 = 1115 psi

F_b = 46,000/3 (ASME B30.20-1993)

= 15,333 psi > 1115 psi ok

TORSION:

M_z = 75#(1.63") 1.63 = BRACKET OFFSET

= 122 #-IN

$K_T = \Sigma\, 1/3\, bt^3$

= 1/3 (4(1.75)(0.25)^3)

= 0.036 IN^4

$f_{vs} = \frac{122 \times .25}{0.036}$ = 847 psi

SHEAR @ SUPPORT = 75# + (16"/12(5.41))/1.59 = 52 psi

TUBE WEIGHT

COMBINED LOADS:

$$f_b/F_b + \frac{f_{vs}}{F_{vs}} + \frac{f_v}{F_v} \overset{?}{\leq} 1.0$$

$$1115/15{,}333 + 847/15333 + 52/15333 = 0.131 < 1.0$$

OK

WELD OF HSS 2X2 TO HSS 8X8:

MAX RADIUS OF HSS 8X8 = $3t = 3(.25) = .75''$

1/2 WELD LENGTH = $4'' - 0.75'' = 3.25''$

MAX. WELD SIZE = $3/16''$ FOR $t = 0.25''$

MAX. SHEAR LOAD PER INCH OF WELD = $0.3(.707)(70)\,3/16$
$= 2.78^k/IN$

ALLOW. WELD LOAD = $3.25(2.78)(2)$
$= 18.07^k = 18{,}070^\# > 75^\#$ OK

HSS 8X8 LOADING:

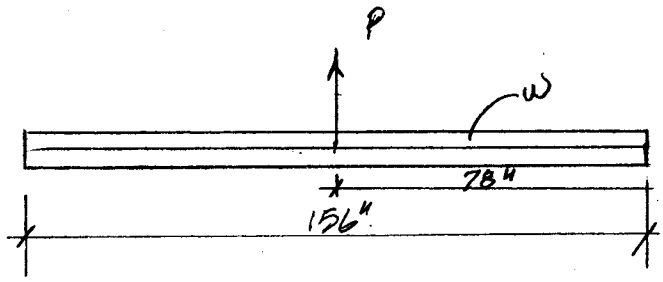

SINCE VACUUM PUMP LOAD IS CARRIED BY CRANE $P = 780^\# + 270^\#$
$= 1050^\#$

$w = 1050/156 = 6.73^\#/IN$

$M = w\ell^2/2 = 6.73(78)^2/2$
$= 20473^\#\text{-}IN$

$f_b = 20473/18.8 = 1089$ PSI

$F_b = 46{,}000/3 = 15{,}333$ PSI > 1089 PSI OK

SHEAR:

$f_v = 1050^\#/7.59\,IN^2 = 138$ PSI $< 15{,}333$ PSI OK

NOvA

INFD VACUUM LIFTING FIXTURE

R. J. WOODS
JAN. 3, 2011

CHECK HSS 6x6x 3/16" VACUUM PUMP MOUNTING TUBES:

CENTER TO CENTER MOUNTING HOLES = 23.38"

CANTILEVER DISTANCE ON HSS 6x6 = $\left(\frac{23.38" - 8"}{2}\right)$
= 7.69"

$M = (1050/2)(7.69) = 4037$ #-IN

$f_b = 4037/7.93 = 509$ psi < 15,333 psi ok

$f_v = (1050/2)/4.27 = 123$ psi < 15,333 psi ok

CHECK WELD OF HSS 6x6 TO HSS 8x8:

M = 4037

DISTANCE BETWEEN TOP & BOTTOM WELD = 6"

P = 4037/6 = 673# TENSION @ BOTTOM
& COMPRESSION @ TOP DURING LIFT

HSS 6x6 IS WELDED ALL AROUND TO HSS 8x8

MAX. LENGTH OF WELD PER SIDE:

MAX. CORNER RADIUS = 3t = 3(3/16)
= .5625"

6" - 2(.5625) = 4.875"

ALLOWABLE TENSION ON WELD = 0.707(3/16)(46.0/3)
= 2.03 K/IN

ALLOWABLE SHEAR ON WELD = 0.707(3/16)(0.3)(70
= 2.78 K/IN

TOP & BOTTOM WELDS TAKE TENSION & COMPRESSION

f_t/IN = 673/4.875
= 138 #/IN < 2030#/IN ok

SHEAR = (1050/2)/2 = 263#/SIDE

263/4.875 = 54#/IN < 2780#/IN ok

BOLTS CONNECTING VACUUM PUMP TO HSS 6x6

LOAD = 1050# BOLTS = 3/8" Φ A = 0.1104 IN²

ASSUME GRADE 2 BOLTS F_u = 74,000 psi

$F_v = 0.17 F_u$ (TAB 1-D p 4-5 AISC)

= 0.17(74000) = 12580 psi

ALLOW. SHEAR/BOLT = 12580(0.1104) = 1389#

ACTUAL LOAD = 1050/8 = 131#/BOLT < 1389#/BOLT

ok

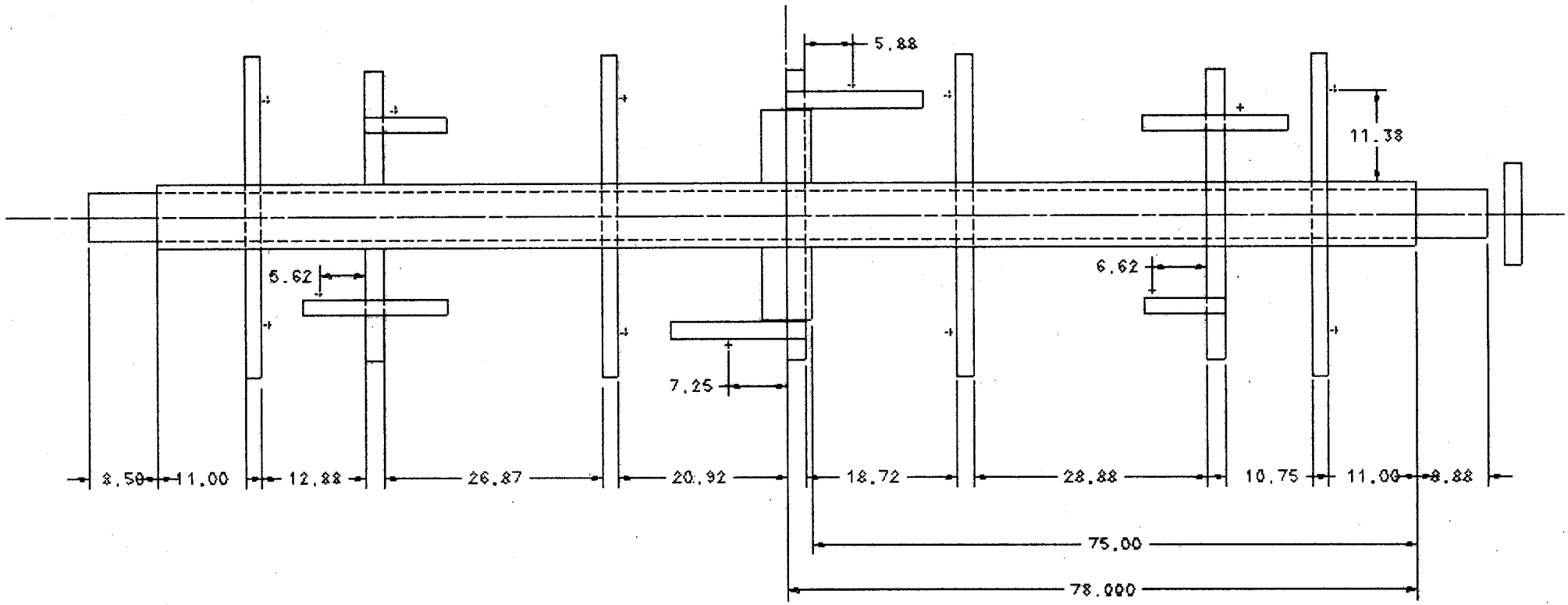

TOP VIEW

FIGURE 1

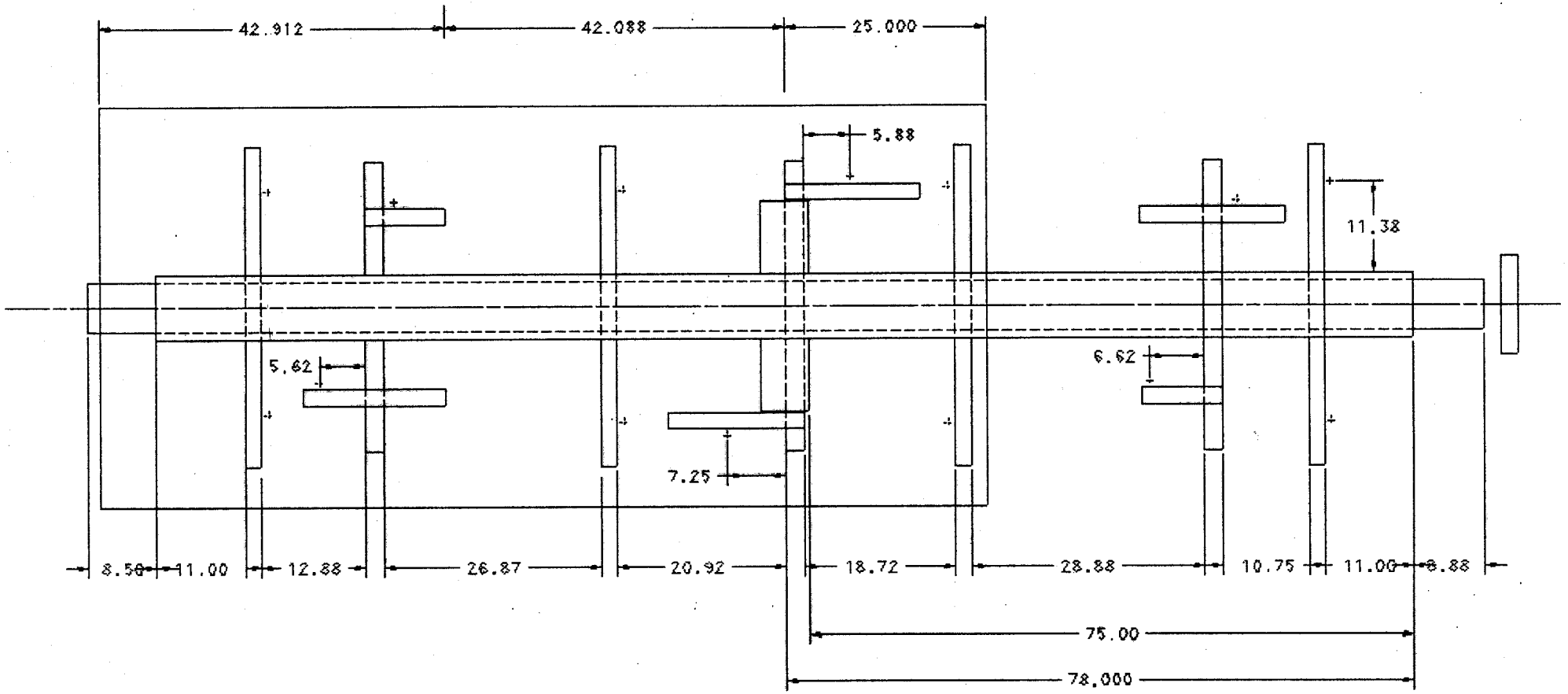

HORIZONTAL MODULE

FIGURE 2

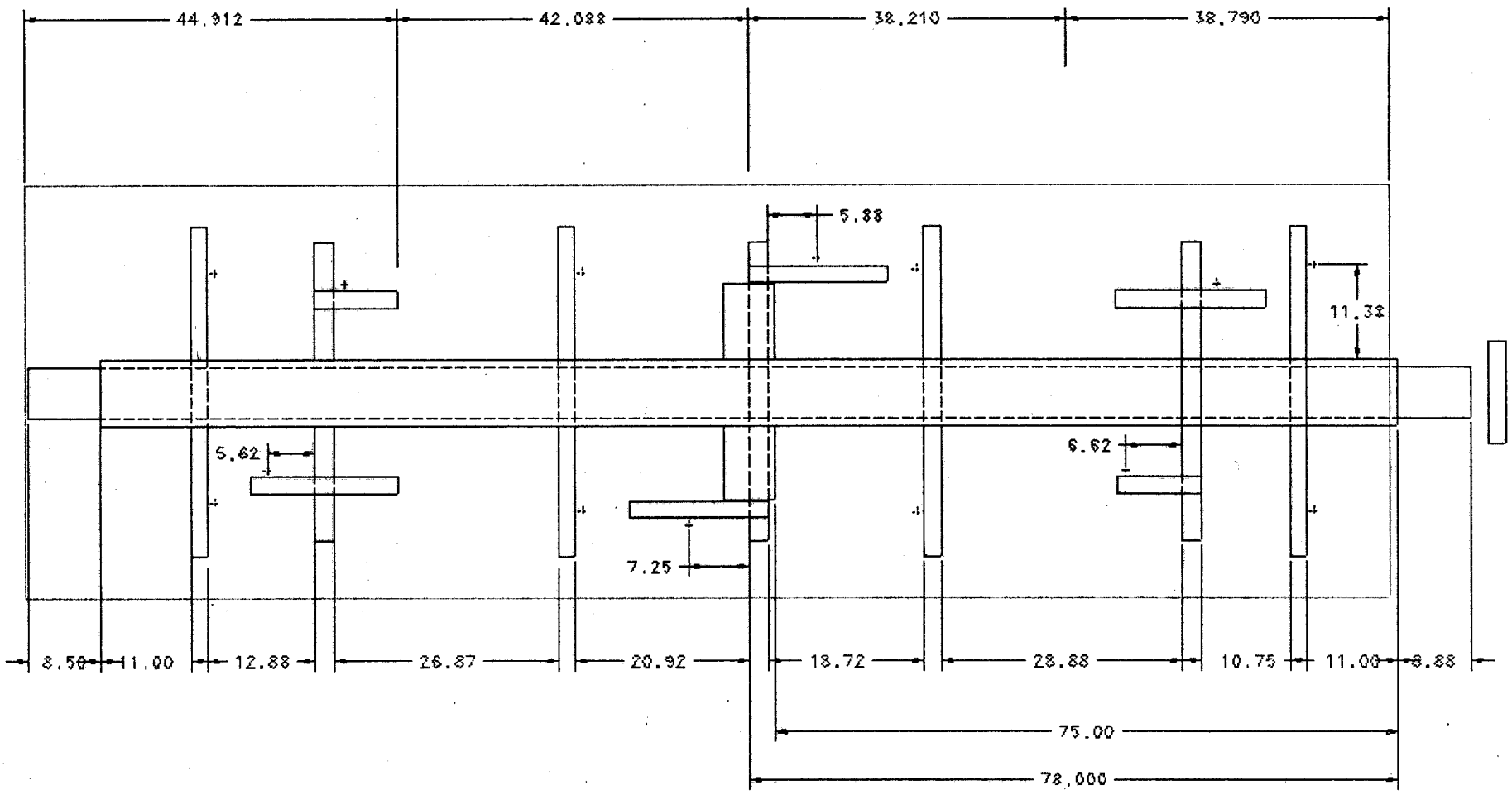

VERTICAL MODULE

FIGURE 3

ANVER® CORPORATION

Vac-Pack Vacuum Generator

Electric Powered

13200280

Control No.: 081506G • Page 1 of 4

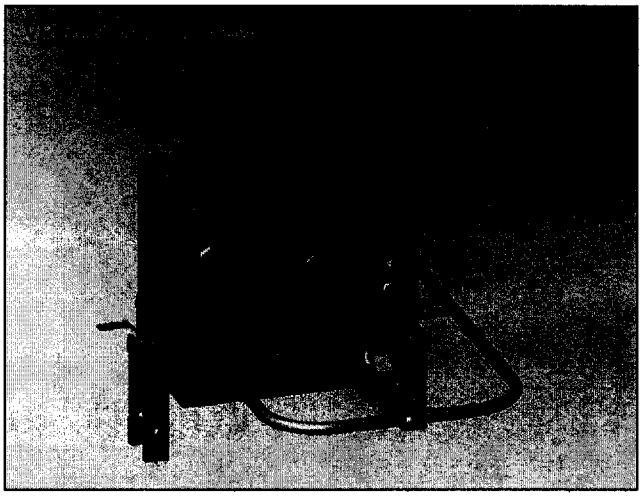

VPE3 Series

with ANVER VacGuard II™ Vacuum Control System

ANVER's VPE3 Series Vac-Packs feature dual vacuum ports, an over-sized filter and improved air flow, making them particularly suitable for handling large capacity non-porous loads or semi-porous to porous type loads. Designed for use with a wide assortment of vacuum pad attachments and lifter assemblies, these high quality Vac-Packs are ruggedly designed for heavy production use. Units are available with heavy duty frames, for mounting remotely, and tilting applications.

Features:

- **VacGuard II Vacuum Control System**
  This revolutionary solid-state Vacuum Control System combines all the required vacuum generator controls in a rugged, compact polycarbonate enclosure. The VacGuard II controls all vacuum pump functions, safety lights and is fitted with a standard audible vacuum leakage warning system.
- **Front Control Panel and Gauges**
  All gauges, lights and power switches are mounted on the front of the control panel. The two vacuum gauges on the face of the panel display the level of vacuum in the manifold and in the reservoir. The control pendant clip mounts to the front handle on a 10 ft. coiled cord and provides rapid attach and release functions at the operator's fingertips.
- **Indicator Lights**
  Green light indicates, "safe" vacuum level.
  Red light indicates, "unsafe" vacuum level.
- **Vacuum Retention**
  The system includes an internal check valve to stop loss of vacuum in the event of a power failure (non-porous loads). An 822 cu. in. vacuum reservoir assists in maintaining a safe vacuum level during a power failure (non-porous loads).
- **Thermal Overload Protection**
  Heat damage is prevented by a thermal sensor that shuts off the motor if the motor temperature exceeds safe limits.
- **Ergonomic Adjustable Front Handlebar**
  Easy to grasp, large loop handlebar enables the operator to easily and safely maneuver the attached load without touching the load itself. Handlebar can be adjusted for smaller size loads.
- **Twist-Lock Power Cord Connectors**
  The Twist-lock receptacles, both the male and female are supplied, which helps prevent accidental disconnection from the power source.
- **Audible Vacuum Leakage Warning System (VLS-03E - Standard)**
  Integrated electronically controlled vacuum leakage sensor monitors vacuum level and will sound an alarm if a slow vacuum leak is present when the vacuum level drops to a pre-determined set point.

Maintenance:

- **Bottom Hinged Front and Back Covers**
  Both the front and back covers fold open for easy access to all components.
- **Air Filter, 2 Places**
  Located on the front and at the rear of the unit, the filter covers are clear for quick inspection and screw off for easy cleaning. [Oversized air filter provided inside of front cover features a screw-on clear filter bowl for easy filter cleaning.

Vacuum Pump*:

- 3/4 hp oil-less motor is thermally overload protected and requires 115V/1ph/60Hz 15 amp service.
- Operating Temperature: [32°F to 104°F (0°C to 40°C)]
  35°F to 135°F (1.7°C to 57.2°C)

Specifications:

- The Light Duty Frame is rated up to 2200 lb (997.9 kg) and is designed for mounting on a 3" x 3" beam.
- The Standard Duty Frame is rated up to 6900 lb (3130 kg) and is designed for mounting on a 3" x 6" beam.
- The Heavy-Duty Frames are rated up to 8000 lb (3629 kg), designed for a 5" x 7" or 6" x 8" beam.
- Remote Mount Frame (no lift bale). Includes 14" x 8" mounting pattern for 3/8-16 hardware.

Options:

- **Optional Moisture Traps (WT-VP3-[Series])**
  For damp applications: prevents saturation of filter and possible damage to pump. Not for handling wet loads.

*** Meets American National Standard ASME B30.20-2003 specifications for Below-the-Hook Lifting Devices. Please refer to Chapter 20-2.

ANVER® CORPORATION

Vac-Pack Vacuum Generator

Electric Powered

13200280

Control No.: 081506G • Page 2 of 4

	VPE3-L	Standard	L	For 3" Sq. Beam	For 5/8-11 Hardware	2200 lbs (997.9 kg)	10	3/4	24" Hg.	Figure A	Detail 1	N/A	Std.	175 (79.4)
	VPE3-S	Standard	S	For 6" x 3" Beam	For 3/4-10 Hardware	6900 lbs (3130 kg)	10	3/4	24" Hg.	Figure B	Detail 1	N/A	Std.	180 (81.6)
	VPE3-H	Standard	H	For 7" x 5" Beam	For 3/4-10 Hardware	8000 lbs (3629 kg)	10	3/4	24" Hg.	Figure C	Detail 1	N/A	Std.	182 (82.6
	VPE3-HO	Standard	HO	For 7" x 5" Beam	Heavy Duty For 3/4-10 Hardware	8000 lbs (3629 kg)	10	3/4	24" Hg.	Figure C	Detail 1	N/A	Std.	184 (83.5)
	VPE3-HD	Standard	HD	For 7" x 5" Beam	For 1"-8 Hardware	8000 lbs (3629 kg)	10	3/4	24" Hg.	Figure D	Detail 1	N/A	Std.	191 (86.6)
	VPE3-HDO	Standard	HDO	For 7" x 5" Beam	Heavy Duty For 1"-8 Hardware	8000 lbs (3629 kg)	10	3/4	24" Hg.	Figure D	Detail 1	N/A	Std.	196 (88.9)
	VPE3-X	Standard	X	For 8" x 6" Beam	Thru-Beam Mfg.	8000 lbs (3629 kg)	10	3/4	24" Hg.	Figure E	Detail 1	N/A	Std.	191 (86.6)
N/A	**VPE3-R**	Standard	R	Remote Mount	For 3/8-16 Hardware	N/A	10	3/4	24" Hg.	Figure F	N/A	Detail 2	N/A	165 (74.8)
N/A	**VPE3-T**	Standard	T	Tilter Application	For 3/8-16 Hardware	N/A	10	3/4	24" Hg.	Figure F	N/A	Detail 2	N/A	165 (74.8)
N/A	**VPE3-TH**	Standard	T	Tilter Application	For 3/8-16 Hardware	N/A	10	3/4	24" Hg.	Figure F	N/A	Detail 2	N/A	170 (77.1)

ANVER® CORPORATION

Vac-Pack Vacuum Generator

Electric Powered

13200280

Control No.: 081506G • Page 3 of 4

Figure A
VPE3-L Shown

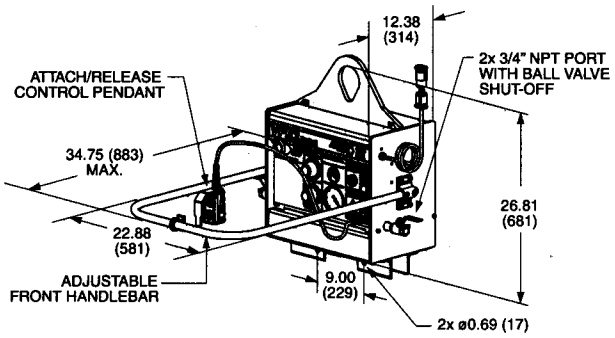

Figure B
VPE3-S Shown

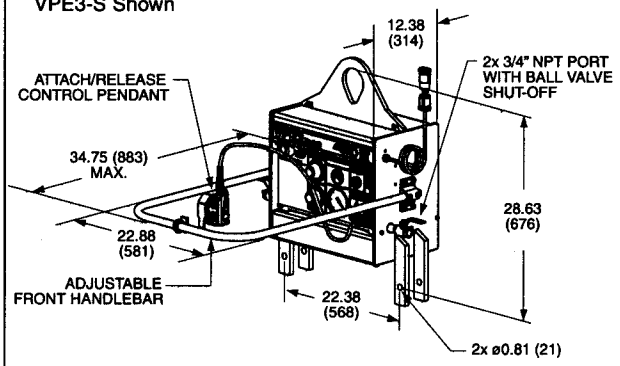

Figure C
VPE3-H &
VPE3-HO Shown

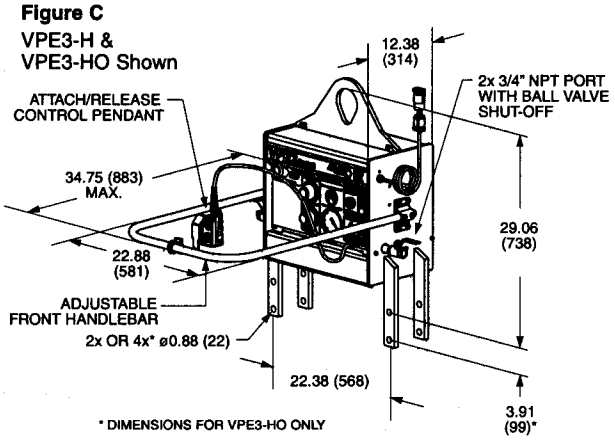

Figure D
VPE3-HD &
VPE3-HDO Shown

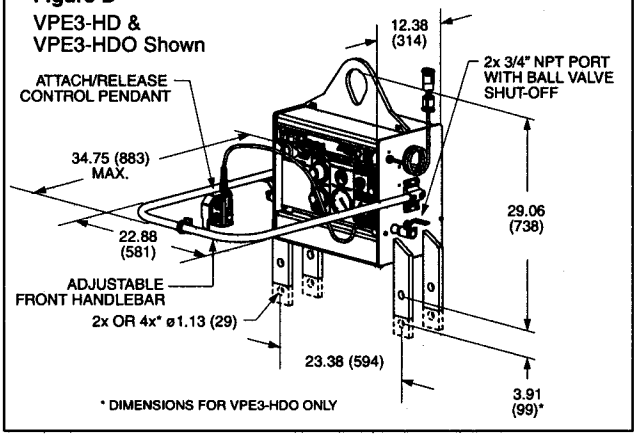

Figure E
VPE3-X Shown

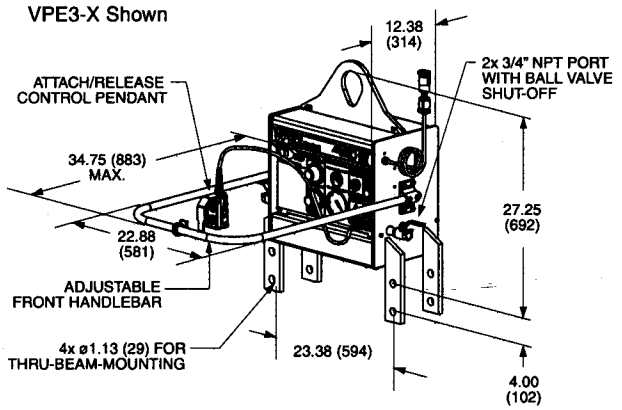

Detail 1
Lifting Bale

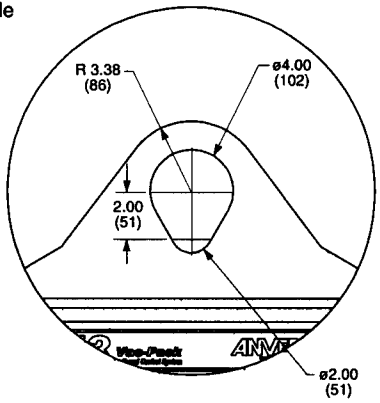

Vacuum Cup Suspension Assemblies

Rigid Cup and Slides with Side Vacuum Port

ANVER® CORPORATION

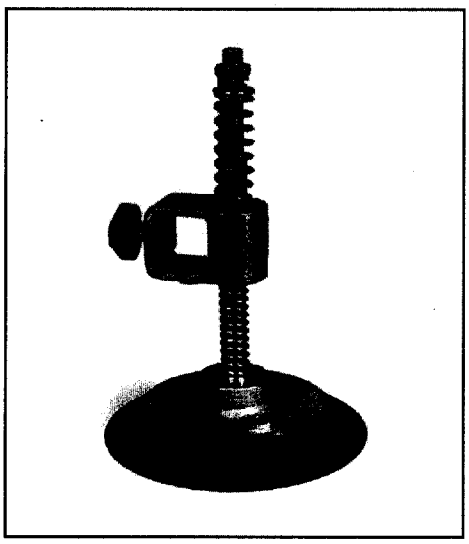

Rigid Suspension Assemblies are also available for our medium sized vacuum cups. Double spring suspensions and side vacuum ports make these assemblies perfect for virtually any material handling application. Adjustable slides are available in a variety of sizes making it easy to adapt to any system. Designed for Medium VC Series Vacuum Cups.

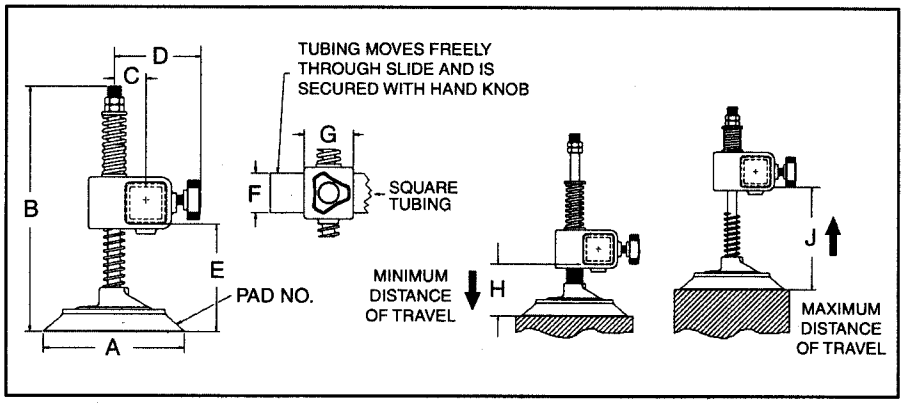

Features:
- Adjustable Slide Mounts
- For use with Medium, Side Port Vacuum Cups (VC Series)
- Designed for Rigid Cups

Suspension Model Number	A Cup Diameter in. (mm)	B in. (mm)	C in. (mm)	D in. (mm)	E in. (mm)	F Beam Size in. (mm)	G in. (mm)	H in. (mm)	J in. (mm)	Weight lb. (kg)	Capacity lb. (kg)	Vacuum Pad Used
PS57R-NBR125	5.88 (149)	11.13 (283)	1.25 (32)	3.69 (94)	4.88 (124)	1.25 (32)	2.5 (64)	3.18 (81)	6.28 (160)	3.0 (1.4)	75 (34)	VC57
PS57R-NBR175	5.88 (149)	11.13 (283)	1.50 (38)	4.19 (106)	4.88 (124)	1.75 (44)	2.5 (64)	3.18 (81)	6.28 (160)	3.1 (1.4)	75 (34)	VC57
PS57R-NBR200	5.88 (149)	11.13 (283)	1.63 (41)	4.44 (113)	4.88 (124)	2.00 (51)	2.5 (64)	3.18 (81)	6.28 (160)	3.2 (1.5)	75 (34)	VC57
PS65R-NBR175	6.63 (168)	11.19 (284)	1.50 (38)	4.19 (106)	4.94 (125)	1.75 (44)	2.5 (64)	3.24 (82)	6.43 (163)	3.3 (1.5)	100 (45)	VC65
PS65R-NBR200	6.63 (168)	11.19 (284)	1.63 (41)	4.44 (113)	4.94 (125)	2.00 (51)	2.5 (64)	3.24 (82)	6.43 (163)	3.4 (1.5)	100 (45)	VC65
PS75R-NBR175	7.50 (191)	12.50 (318)	1.50 (38)	4.19 (106)	5.64 (143)	1.75 (44)	2.5 (64)	3.13 (80)	7.00 (178)	4.6 (2.1)	150 (68)	VC75
PS75R-NBR200	7.50 (191)	12.50 (318)	1.63 (41)	4.44 (113)	5.64 (143)	2.00 (51)	2.5 (64)	3.13 (80)	7.00 (178)	4.4 (2.0)	150 (68)	VC75
PS95R-NBR175	10.00 (254)	14.83 (377)	1.50 (38)	4.19 (106)	6.70 (170)	1.75 (44)	2.5 (64)	4.00 (102)	8.61 (219)	7.3 (3.3)	250 (113)	VC95R-2
PS95R-NBR200	10.00 (254)	14.83 (377)	1.63 (41)	4.44 (113)	6.70 (170)	2.00 (51)	2.5 (64)	4.00 (102)	8.61 (219)	7.2 (3.3)	250 (113)	VC95R-2
PS119R-NBR200	12.25 (311)	14.75 (3.75)	1.63 (41)	4.44 (113)	6.64 (169)	2.00 (51)	2.5 (64)	4.18 (106)	7.82 (199)	9.1 (4.1)	500 (227)	VC119R-2

* The cup capacities shown above are based on 24"Hg at sea level with a safety factor of two (2) in the horizontal (flat), and four (4) in the vertical (upright). Vertical Load Capacity is half of the listed Horizontal Load Capacities above.
Rated Load Capacities are estimated; actual capacity will vary based on the load surface and the level of vacuum.

➡ This spec sheet was adapted for print from our website. Additional information and photos are available at www.anver.com. 9041401

36 Parmenter Road • Hudson MA 01749 USA • 978-568-0221 • 800-654-3500 • FAX 978-568-1570 • www.anver.com • E-Mail: sales@anver.com

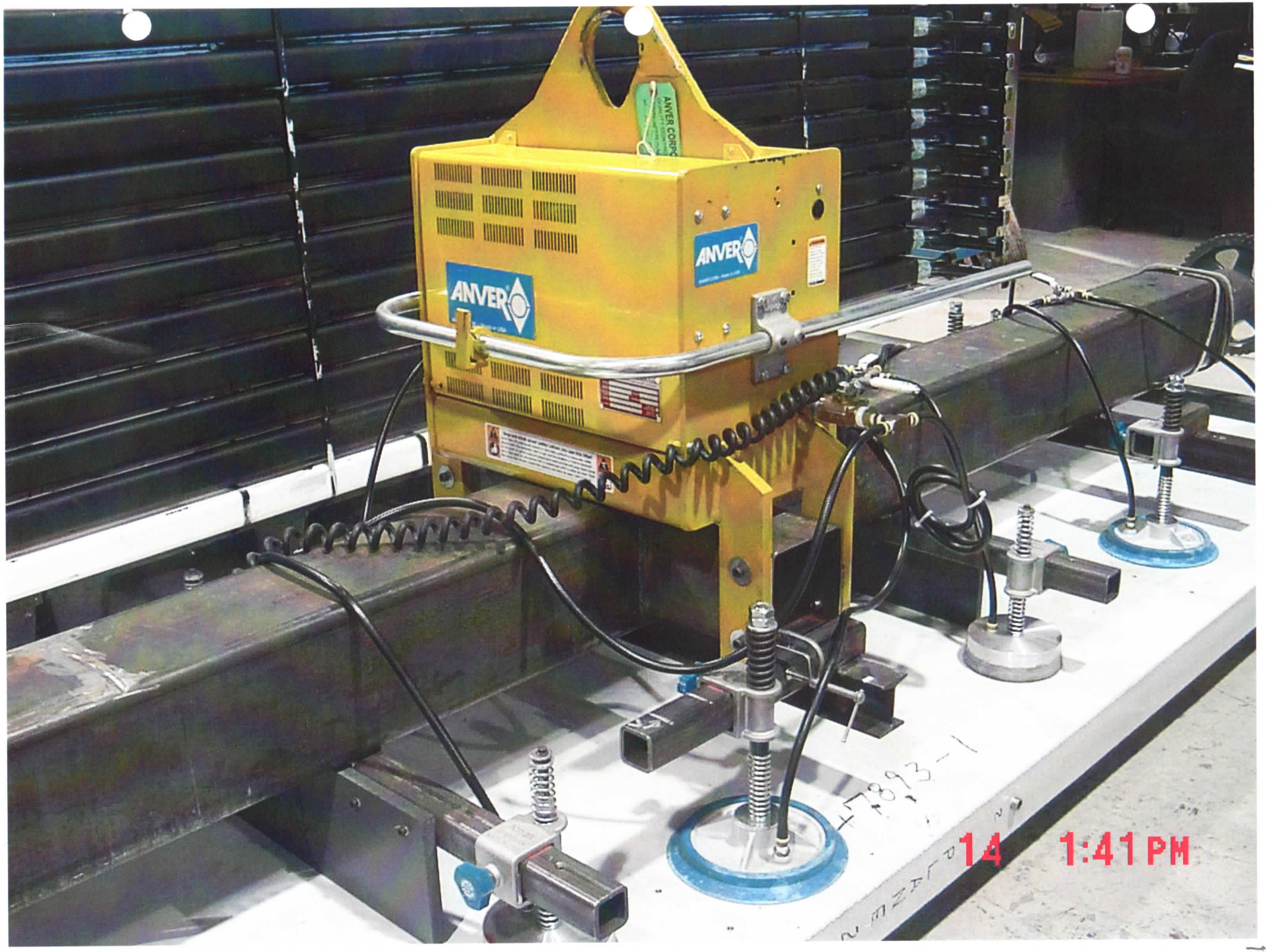
ANVER
ANVER
14 1:41 PM